Linear Optocoupler, High Gain Stability, Wide Bandwidth

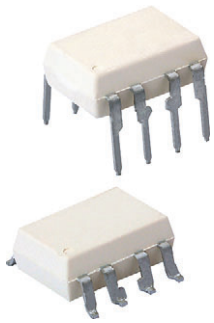

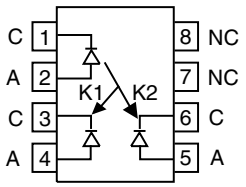

FEATURES

- Couples AC and DC signals
- High gain stability, ± 0.005 %/°C typically
- Low input-output capacitance
- Isolation rated voltage 4420 V_{RMS}
- Internal insulation distance, > 0.4 mm
- Material categorization: for definitions of compliance please see www.vishay.com/doc?99912

Pb-free
e3
RoHS COMPLIANT
HALOGEN FREE
GREEN (5-2008)

LINKS TO ADDITIONAL RESOURCES

3D Models
Related Documents
SPICE Models

DESCRIPTION

The IL300 linear optocoupler consists of an AlGaAs infrared emitter irradiating an output PIN photodiode and a feedback photodiode. The feedback photodiode captures a percentage of the emitter's flux and generates a control signal (I_{P1}) that can be used to keep the emitter output constant by adjusting the emitter forward current. This compensates for the emitter's non-linear, time, and temperature characteristics. The output PIN photodiode produces an output signal (I_{P2}) that is linearly related to the servo optical flux created by the emitter.

The time and temperature stability of the input-output coupler gain (K3) is insured by using matched PIN photodiodes that accurately track the output flux of the emitter.

APPLICATIONS

- Power supply feedback voltage / current
- Medical sensor isolation
- Audio signal interfacing
- Isolated process control transducers
- Digital telephone isolation

AGENCY APPROVALS

- UL / cUL 1577
- DIN EN 60747-5-5 (VDE 0884-5), available with option 1
- BSI
- FIMKO
- CQC

ORDERING INFORMATION

I	L	3	0	0	-	D	E	F	G	-	X	0	#	#	T
PART NUMBER						K3 BIN					PACKAGE OPTION				TAPE AND REEL

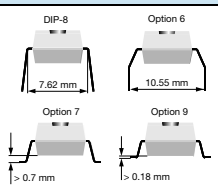

AGENCY CERTIFIED / PACKAGE	K3 BIN				
UL, cUL, BSI, FIMKO, CQC	**0.557 to 1.618**	**0.765 to 1.181**	**0.851 to 1.061**	**0.851 to 0.955**	**0.945 to 1.061**
DIP-8	IL300	IL300-DEFG	IL300-EF	IL300-E	IL300-F
DIP-8, 400 mil, option 6	-	IL300-DEFG-X006	-	IL300-E-X006	-
SMD-8, option 7	IL300-X007T(1)	IL300-DEFG-X007T(1)	IL300-EF-X007T(1)	IL300-E-X007T	IL300-F-X007T(1)
SMD-8, option 9	IL300-X009T	IL300-DEFG-X009T	IL300-EF-X009T	IL300-E-X009T	IL300-F-X009T(1)
UL, cUL, BSI, FIMKO, CQC, VDE (option 1)	**0.557 to 1.618**	**0.765 to 1.181**	**0.851 to 1.061**	**0.851 to 0.955**	**0.945 to 1.061**
DIP-8	-	IL300-DEFG-X001	-	-	IL300-F-X001
DIP-8, 400 mil, option 6	IL300-X016	IL300-DEFG-X016	IL300-EF-X016	-	IL300-F-X016
SMD-8, option 7	IL300-X017	IL300-DEFG-X017T(1)	IL300-EF-X017T(1)	-	IL300-F-X017T

Note
(1) Also available in tubes, do not put "T" on the end

For technical questions, contact: optocoupleranswers@vishay.com
THIS DOCUMENT IS SUBJECT TO CHANGE WITHOUT NOTICE. THE PRODUCTS DESCRIBED HEREIN AND THIS DOCUMENT ARE SUBJECT TO SPECIFIC DISCLAIMERS, SET FORTH AT www.vishay.com/doc?91000

sales@prom-elec.com / ООО ПРОМЭЛЕКТРОНИКА

ABSOLUTE MAXIMUM RATINGS (T_{amb} = 25 °C, unless otherwise specified)				
PARAMETER	**TEST CONDITION**	**SYMBOL**	**VALUE**	**UNIT**
INPUT				
Power dissipation		P_{diss}	100	mW
Forward current		I_F	60	mA
Surge current (pulse width < 10 µs)		I_{PK}	250	mA
Reverse voltage		V_R	5	V
Junction temperature		T_j	125	°C
OUTPUT				
Power dissipation		P_{diss}	50	mW
Reverse voltage		V_R	50	V
Junction temperature		T_j	125	°C
COUPLER				
Total package dissipation at 25 °C		P_{tot}	150	mW
Storage temperature		T_{stg}	-55 to +150	°C
Operating temperature		T_{amb}	-55 to +100	°C

Note

- Stresses in excess of the absolute maximum ratings can cause permanent damage to the device. Functional operation of the device is not implied at these or any other conditions in excess of those given in the operational sections of this document. Exposure to absolute maximum ratings for extended periods of the time can adversely affect reliability

ELECTRICAL CHARACTERISTICS (T_{amb} = 25 °C, unless otherwise specified)						
PARAMETER	**TEST CONDITION**	**SYMBOL**	**MIN.**	**TYP.**	**MAX.**	**UNIT**
INPUT (LED EMITTER)						
Forward voltage	I_F = 10 mA	V_F	-	1.4	1.5	V
Reverse current	V_R = 5 V	I_R	-	1	-	µA
Junction capacitance	V_F = 0 V, f = 1 MHz	C_j	-	26	-	pF
OUTPUT						
Dark current	V_{det} = -15 V, I_F = 0 A	I_D	-	1	25	nA
Open circuit voltage	I_F = 10 mA	V_D	-	500	-	mV
Short circuit current	I_F = 10 mA	I_{SC}	-	90	-	µA
Junction capacitance	V_F = 0 V, f = 1 MHz	C_j	-	12	-	pF
COUPLER						
Input-output capacitance	V_F = 0 V, f = 1 MHz		-	1	-	pF
K1, servo gain (I_{P1}/I_F)	I_F = 10 mA, V_{det} = -15 V	K1	0.005	0.009	0.015	
Servo photocurrent [(1)(2)]	I_F = 10 mA, V_{det} = -15 V	I_{P1}	-	90	-	µA
K2, forward gain (I_{P2}/I_F)	I_F = 10 mA, V_{det} = -15 V	K2	0.005	0.009	0.015	
Forward current	I_F = 10 mA, V_{det} = -15 V	I_{P2}	-	90	-	µA
K3, transfer gain (K2/K1) [(1)(2)]	I_F = 10 mA, V_{det} = -15 V	K3	0.56	1	1.65	K2/K1
Transfer gain stability	I_F = 10 mA, V_{det} = -15 V, T_{amb} = 0 °C to 75 °C	$\Delta K3/\Delta T_A$	-	± 0.005	± 0.15	%/°C
Transfer gain linearity	I_F = 2 mA to 10 mA	ΔK3	-	± 0.25	-	%

For technical questions, contact: optocoupleranswers@vishay.com
THIS DOCUMENT IS SUBJECT TO CHANGE WITHOUT NOTICE. THE PRODUCTS DESCRIBED HEREIN AND THIS DOCUMENT ARE SUBJECT TO SPECIFIC DISCLAIMERS, SET FORTH AT www.vishay.com/doc?91000

ELECTRICAL CHARACTERISTICS (T_{amb} = 25 °C, unless otherwise specified)						
PARAMETER	**TEST CONDITION**	**SYMBOL**	**MIN.**	**TYP.**	**MAX.**	**UNIT**
PHOTOCONDUCTIVE OPERATION						
Frequency response	I_F = 10 mA, MOD = ± 4 mA, R_L = 50 Ω	BW (-3 db)	-	1.4	-	MHz
Phase response at 200 kHz	V_{det} = -15 V		-	-45	-	°

Notes

- Minimum and maximum values were tested requirements. Typical values are characteristics of the device and are the result of engineering evaluation. Typical values are for information only and are not part of the testing requirements

(1) Bin sorting: K3 (transfer gain) is sorted into bins that are ± 6 %, as follows:
Bin D = 0.765 to 0.859
Bin E = 0.851 to 0.955
Bin F = 0.945 to 1.061
Bin G = 1.051 to 1.181
K3 = K2/K1. K3 is tested at I_F = 10 mA, V_{det} = -15 V

(2) Bin categories: All IL300s are sorted into a K3 bin, indicated by an alpha character that is marked on the part. The bins range from “A” through “J”.
The IL300 is shipped in tubes of 50 each. Each tube contains only one category of K3. The category of the parts in the tube is marked on the tube label as well as on each individual part

(3) Category options: standard IL300 orders will be shipped from the categories that are available at the time of the order. Any of the ten categories may be shipped. For customers requiring a narrower selection of bins, the bins can be grouped together as follows:
IL300-DEFG: order this part number to receive categories D, E, F, G only
IL300-EF: order this part number to receive categories E, F only
IL300-E: order this part number to receive category E only

SWITCHING CHARACTERISTICS						
PARAMETER	**TEST CONDITION**	**SYMBOL**	**MIN.**	**TYP.**	**MAX.**	**UNIT**
Rise time	I_F = 10 mA, MOD = +2 mA, R_L = 10 kΩ	t_r	-	0.8	-	µs
Fall time		t_f	-	0.8	-	µs

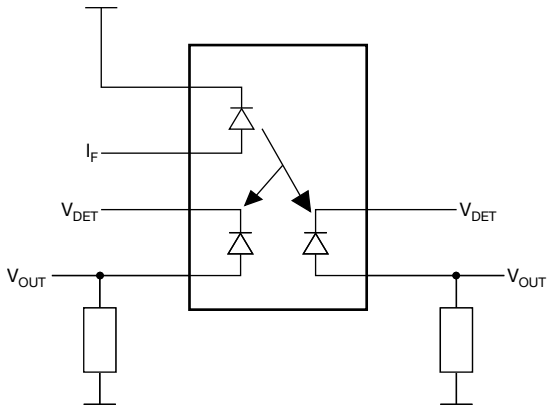

Fig. 1 - Test Circuit

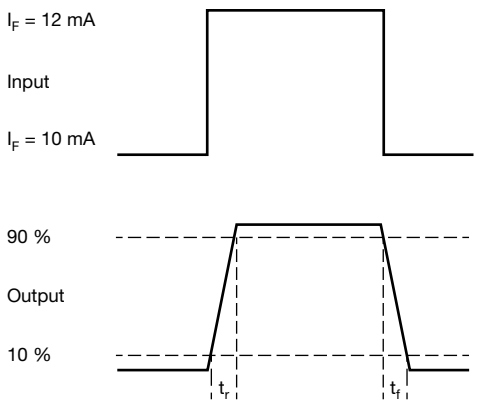

Fig. 2 - Switching Times

COMMON MODE TRANSIENT IMMUNITY						
PARAMETER	**TEST CONDITION**	**SYMBOL**	**MIN.**	**TYP.**	**MAX.**	**UNIT**
Common mode capacitance	V_F = 0 V, f = 1 MHz	C_{CM}	-	1	-	pF
Common mode rejection ratio	f = 60 Hz, R_L = 2.2 kΩ	CMRR	-	100	-	dB

For technical questions, contact: optocoupleranswers@vishay.com
THIS DOCUMENT IS SUBJECT TO CHANGE WITHOUT NOTICE. THE PRODUCTS DESCRIBED HEREIN AND THIS DOCUMENT ARE SUBJECT TO SPECIFIC DISCLAIMERS, SET FORTH AT www.vishay.com/doc?91000

SAFETY AND INSULATION RATINGS				
PARAMETER	**TEST CONDITION**	**SYMBOL**	**VALUE**	**UNIT**
Climatic classification	According to IEC 68 part 1		55 / 100 / 21	
Comparative tracking index		CTI	175	
Maximum rated withstanding isolation voltage	t = 1 min	V_{ISO}	4420	V_{RMS}
Maximum transient isolation voltage		V_{IOTM}	10 000	V_{peak}
Maximum repetitive peak isolation voltage		V_{IORM}	890	V_{peak}
Isolation resistance	V_{IO} = 500 V, T_{amb} = 25 °C	R_{IO}	$\geq 10^{12}$	Ω
	V_{IO} = 500 V, T_{amb} = 100 °C	R_{IO}	$\geq 10^{11}$	Ω
Output safety power		P_{SO}	400	mW
Input safety current		I_{SI}	275	mA
Safety temperature		T_S	175	°C
Creepage distance	DIP-8		≥ 7	mm
Clearance distance			≥ 7	mm
Creepage distance	DIP-8, 400 mil, option 6; SMD-8, option 7; SMD-8, option 9		≥ 8	mm
Clearance distance			≥ 8	mm
Insulation thickness		DTI	≥ 0.4	mm

Note

- As per IEC 60747-5-5, § 7.4.3.8.2, this optocoupler is suitable for “safe electrical insulation” only within the safety ratings. Compliance with the safety ratings shall be ensured by means of protective circuits

TYPICAL CHARACTERISTICS (T_{amb} = 25 °C, unless otherwise specified)

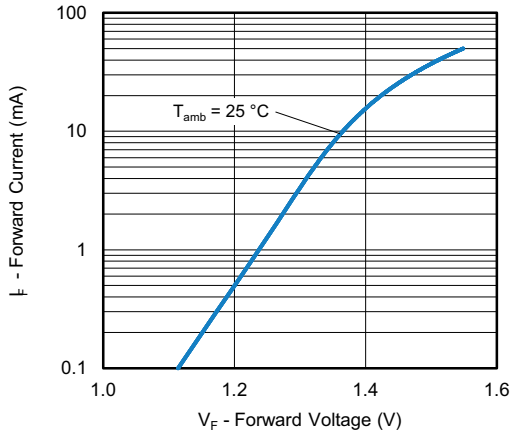

Fig. 3 - Forward Voltage vs. Forward Current

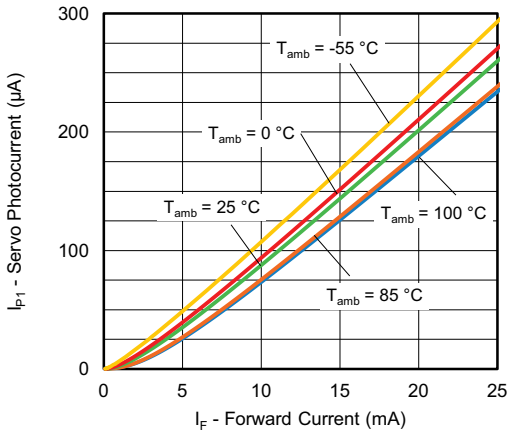

Fig. 4 - Servo Photocurrent vs. Forward Current

For technical questions, contact: optocoupleranswers@vishay.com
THIS DOCUMENT IS SUBJECT TO CHANGE WITHOUT NOTICE. THE PRODUCTS DESCRIBED HEREIN AND THIS DOCUMENT ARE SUBJECT TO SPECIFIC DISCLAIMERS, SET FORTH AT www.vishay.com/doc?91000

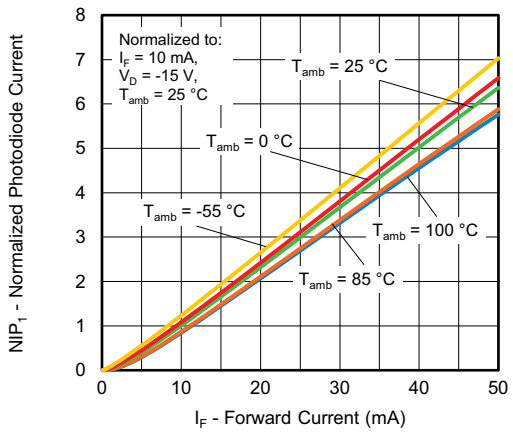

Fig. 5 - Normalized Photodiode Current vs. Forward Current

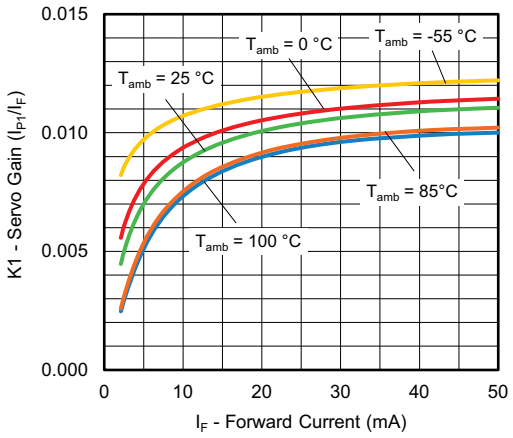

Fig. 6 - Servo Gain vs. Forward Current

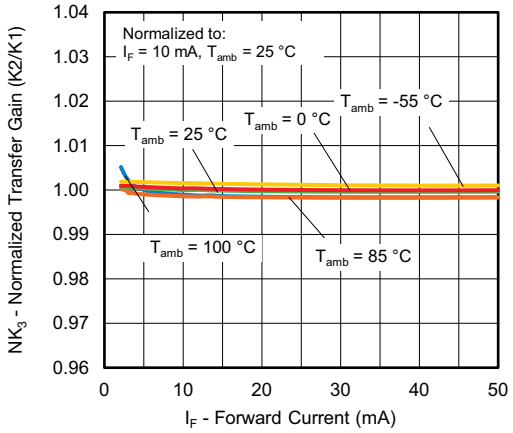

Fig. 7 - Normalized Transfer Gain vs. Forward Current

For technical questions, contact: optocoupleranswers@vishay.com
THIS DOCUMENT IS SUBJECT TO CHANGE WITHOUT NOTICE. THE PRODUCTS DESCRIBED HEREIN AND THIS DOCUMENT ARE SUBJECT TO SPECIFIC DISCLAIMERS, SET FORTH AT www.vishay.com/doc?91000

PACKAGE DIMENSIONS (in millimeters)

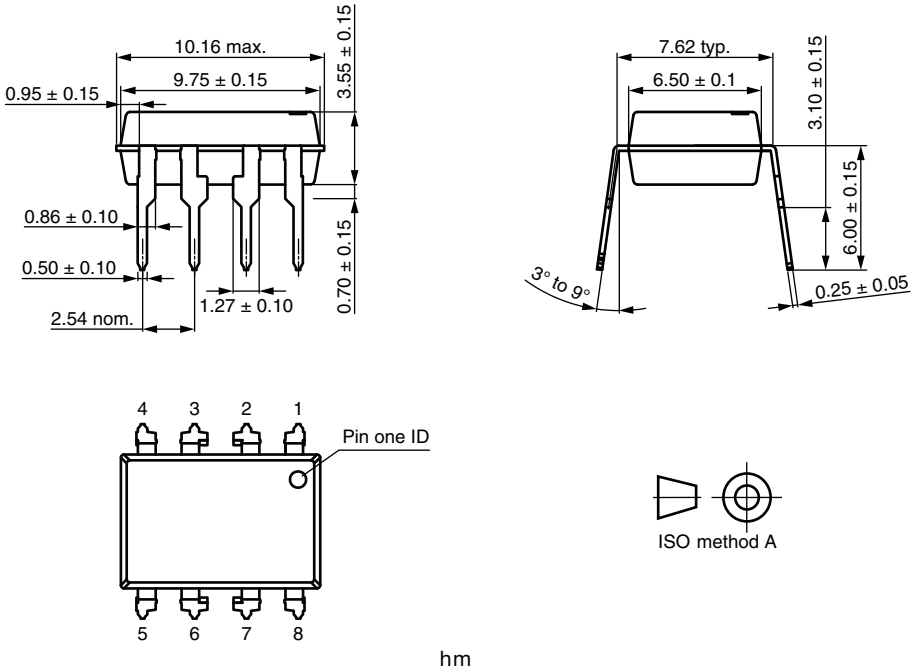

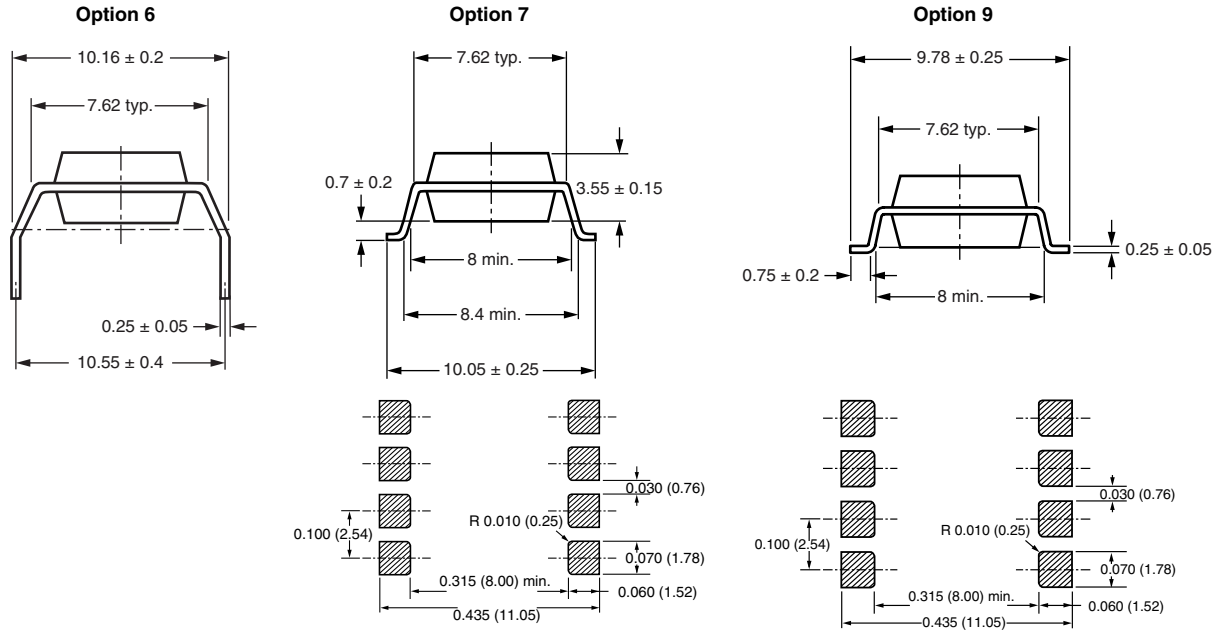

PACKAGE MARKING

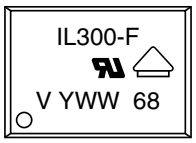

Fig. 8 - Example of IL300-F-X001

For technical questions, contact: optocoupleranswers@vishay.com
THIS DOCUMENT IS SUBJECT TO CHANGE WITHOUT NOTICE. THE PRODUCTS DESCRIBED HEREIN AND THIS DOCUMENT ARE SUBJECT TO SPECIFIC DISCLAIMERS, SET FORTH AT www.vishay.com/doc?91000

SOLDER PROFILES

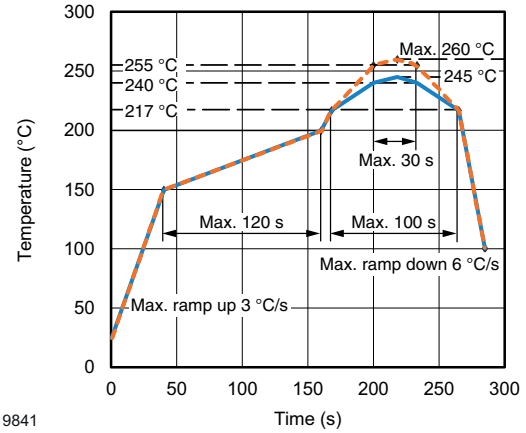

Fig. 9 - Lead (Pb)-free Reflow Solder Profile According to J-STD-020 for SMD Devices

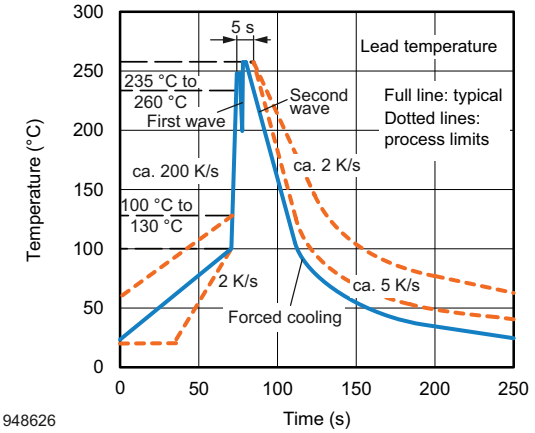

Fig. 10 - Wave Soldering Double Wave Profile According to J-STD-020 for DIP Devices

HANDLING AND STORAGE CONDITIONS

ESD level: HBM class 2

Floor life: unlimited

Conditions: T_{amb} < 30 °C, RH < 85 %

Moisture sensitivity level 1, according to J-STD-020

For technical questions, contact: optocoupleranswers@vishay.com
THIS DOCUMENT IS SUBJECT TO CHANGE WITHOUT NOTICE. THE PRODUCTS DESCRIBED HEREIN AND THIS DOCUMENT ARE SUBJECT TO SPECIFIC DISCLAIMERS, SET FORTH AT www.vishay.com/doc?91000

Disclaimer

ALL PRODUCT, PRODUCT SPECIFICATIONS AND DATA ARE SUBJECT TO CHANGE WITHOUT NOTICE TO IMPROVE RELIABILITY, FUNCTION OR DESIGN OR OTHERWISE.

Vishay Intertechnology, Inc., its affiliates, agents, and employees, and all persons acting on its or their behalf (collectively, “Vishay”), disclaim any and all liability for any errors, inaccuracies or incompleteness contained in any datasheet or in any other disclosure relating to any product.

Vishay makes no warranty, representation or guarantee regarding the suitability of the products for any particular purpose or the continuing production of any product. To the maximum extent permitted by applicable law, Vishay disclaims (i) any and all liability arising out of the application or use of any product, (ii) any and all liability, including without limitation special, consequential or incidental damages, and (iii) any and all implied warranties, including warranties of fitness for particular purpose, non-infringement and merchantability.

Statements regarding the suitability of products for certain types of applications are based on Vishay's knowledge of typical requirements that are often placed on Vishay products in generic applications. Such statements are not binding statements about the suitability of products for a particular application. It is the customer's responsibility to validate that a particular product with the properties described in the product specification is suitable for use in a particular application. Parameters provided in datasheets and / or specifications may vary in different applications and performance may vary over time. All operating parameters, including typical parameters, must be validated for each customer application by the customer's technical experts. Product specifications do not expand or otherwise modify Vishay's terms and conditions of purchase, including but not limited to the warranty expressed therein.

Hyperlinks included in this datasheet may direct users to third-party websites. These links are provided as a convenience and for informational purposes only. Inclusion of these hyperlinks does not constitute an endorsement or an approval by Vishay of any of the products, services or opinions of the corporation, organization or individual associated with the third-party website. Vishay disclaims any and all liability and bears no responsibility for the accuracy, legality or content of the third-party website or for that of subsequent links.

Except as expressly indicated in writing, Vishay products are not designed for use in medical, life-saving, or life-sustaining applications or for any other application in which the failure of the Vishay product could result in personal injury or death. Customers using or selling Vishay products not expressly indicated for use in such applications do so at their own risk. Please contact authorized Vishay personnel to obtain written terms and conditions regarding products designed for such applications.

No license, express or implied, by estoppel or otherwise, to any intellectual property rights is granted by this document or by any conduct of Vishay. Product names and markings noted herein may be trademarks of their respective owners.

© 2023 VISHAY INTERTECHNOLOGY, INC. ALL RIGHTS RESERVED