HC/49US (AT49) LOW PROFILE SURFACE MOUNT MICROPROCESSOR CRYSTAL

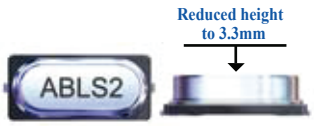

11.4 x 4.7 x 3.3 mm

ABLS2

RoHS Compliant

Moisture Sensitivity Level (MSL) – This product is Hermetically Sealed and not Moisture Sensitive - MSL = N/A: Not Applicable

FEATURES:

- Suitable for RoHS compliant reflow
- Low height reduced to 3.3mm
- Available suitable for thin equipment
- Tight stability & extended temperature

APPLICATIONS:

- Computers, Modems, Microprocessors
- Wireless Applications

STANDARD SPECIFICATIONS:

Parameters	Minimum	Typical	Maximum	Units	Notes
Frequency Range	3.579545	-----	24.00	MHz	Fundamental AT (Standard)
	24.01	-----	50.00		Fundamental AT or BT (See options)
	24.01	-----	70.00		3rd Overtone (Standard)
Operation Mode	Fundamental or 3rd Overtone				
Operating Temperature	0	-----	+70	ºC	See options
Storage Temperature	-55	-----	+125	ºC	
Frequency Tolerance @+25°C	-50	-----	+50	ppm	See options
Frequency Stability over the Operating Temperature (ref. to +25°C)	-50	-----	+50	ppm	See options (For BT cut, ±100ppm max.at -10° C to +60° C only)
Equivalent series resistance (R1)	See table 1 below			Ω	
Shunt capacitance (C0)	-----	-----	7	pF	
Load capacitance (CL)	-----	18	-----	pF	Standard (See options if other than STD)
Drive Level	-----	100	1000	µW	
Aging	-5	-----	+5	ppm	@25°C±3°C First year
Insulation Resistance	500	-----	-----	MΩ	@ 100Vdc ± 15V
Drive level dependency (DLD)	Minimum 7 points tested: from 1µW to 500µW. Change in frequency (Maximum - Minimum) over DLD range < ±10ppm Change in ESR (Maximum - Minimum) over DLD range < 25% of Max ESR value. Maximum ESR over DLD range < Max ESR value.				

TABLE 1: ESR

FREQUENCY (MHz)	ESR (Ω)
3.579545 - 4.999 (Fund.)	180
5.000 - 5.999 (Fund.)	120
6.000 - 7.999 (Fund.)	100
8.000 - 8.999 (Fund.)	80
9.000 - 9.999 (Fund.)	60
10.000 - 15.999 (Fund.)	50
16.000 - 50.000 (Fund.)	40
24.01 - 31.999 (3rd O/T)	100
32.000 - 70.00 (3rd O/T)	80

REVISED: 11.15.2016

ABRACON LLC
The Power of Linking Together

5101 Hidden Creek Lane Spicewood TX 78669
Phone: 512-371-6159 | Fax: 512-351-8858
For terms and conditions of sale please visit:
www.abracon.com

ABRACON IS ISO9001-2008 CERTIFIED

sales@prom-elec.com / ООО ПРОМЭЛЕКТРОНИКА

HC/49US (AT49) LOW PROFILE SURFACE MOUNT MICROPROCESSOR CRYSTAL

ABLS2

RoHS Compliant

11.4 x 4.7 x 3.3 mm

Options and Part Identification

(left blank if standard)

ABLS2 - ☐ MHz - ☐ - ☐ - ☐☐☐ - ☐ - ☐

Frequency in MHz

Please specify the frequency in MHz. e.g. 14.31818MHz

Load Capacitance (pF)

Please specify CL (Minimum 10pF) in pF or S for series

Custom ESR if other than standard

R□

□: Specify a value in Ω (e.g.: R40)

Operating Temp.
A: -10°C ~ +60°C
B: -20°C ~ +70°C
C: -30°C ~ +70°C
N: -30°C ~ +85°C
D: -40°C ~ +85°C
J*: -40°C ~ +105°C
K*: -40°C ~ +125°C
L*: -55°C ~ +125°C

Freq. Tolerance
H5: ± 5 ppm
1: ± 10 ppm
7: ± 15 ppm
2: ± 20 ppm
3: ± 25 ppm
4: ± 30 ppm

Freq. Stability
U**: ± 10 ppm
G: ± 15 ppm
X: ± 20 ppm
W: ± 25 ppm
Y: ± 30 ppm
H: ± 35 ppm
Q: ± 100 ppm
R: ± 150 ppm

Oscillation Mode

F: Fund. AT>24MHz
FB: Fund. BT>24MHz

Packaging

Blank: Bulk
T: Tape&Reel

NOTE: Fundamental BT frequency stability ± 100ppm max. at -10° C to +60° C only.
* Frequency stability ±50ppm, ±100ppm, ±150ppm only. Contact ABRACON for tighter frequency stability.
** Contact ABRACON for availability of ±10ppm with other Operating Temperature options.

HC/49US (AT49) LOW PROFILE SURFACE MOUNT MICROPROCESSOR CRYSTAL

ABLS2

Pb RoHS Compliant

11.4 x 4.7 x 3.3 mm

OUTLINE DRAWING:

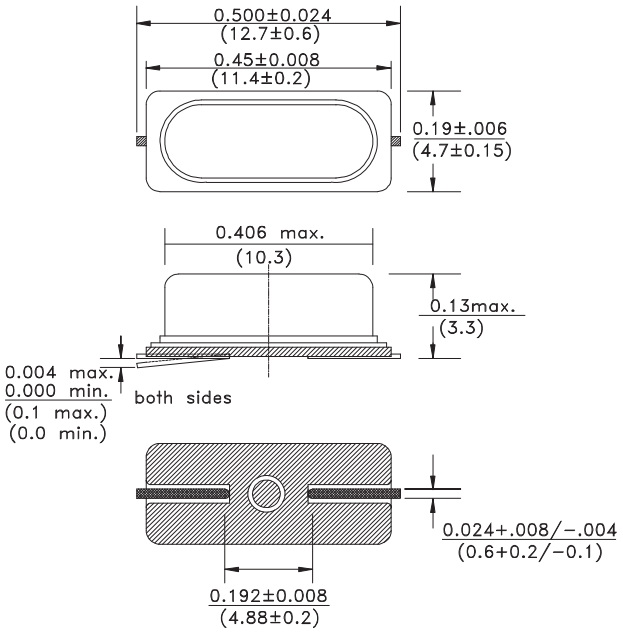

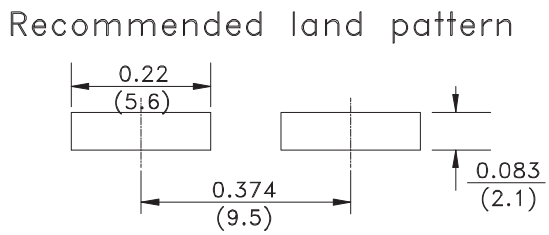

TAPE & REEL: T = tape and reel (1000pcs/reel)

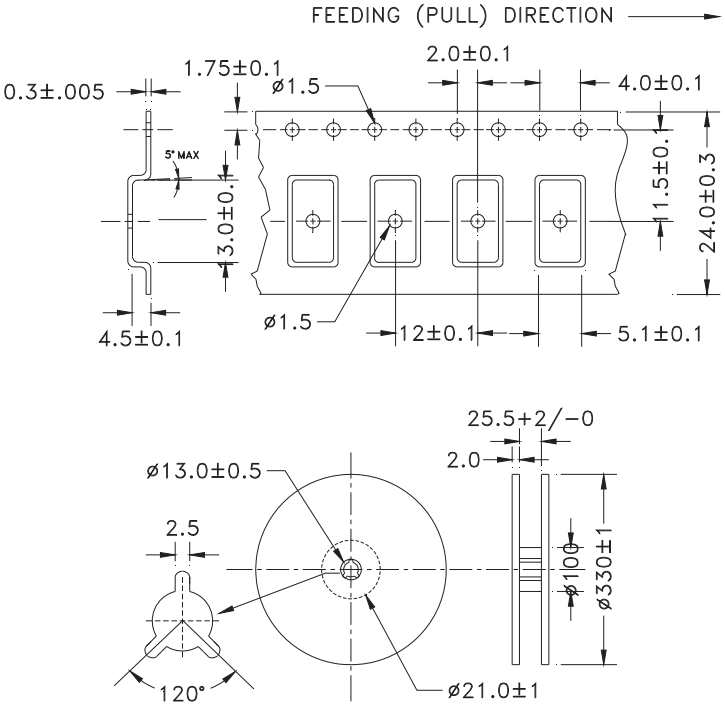

Dimensions: mm

Reflow Profile

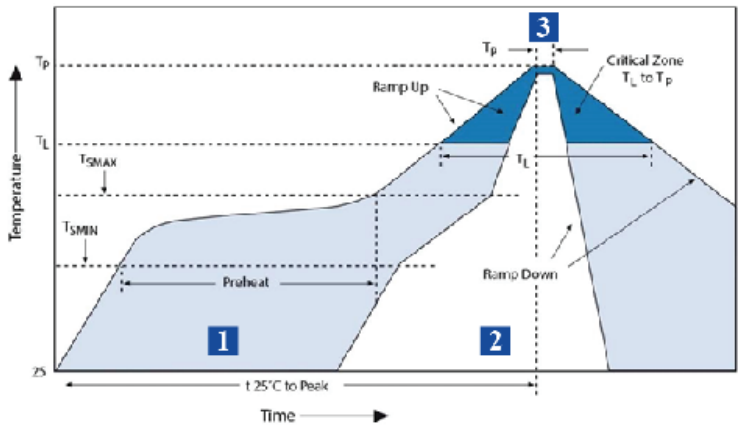

Zone	Description	Temperature	Time
1	Preheat	T_{SMIN} ~ T_{SMAX} 150°C ~ 180°C	60 ~ 120 sec.
2	Reflow	T_L 230°C	30 ~ 40 sec.
3	Peak Heat	T_P 260°C	10 sec. MAX

ATTENTION: Abracon products are COTS - Commercial-Off-The-Shelf products; suitable for Commercial, Industrial and, where designated, Automotive Applications. Abracon's products are not specifically designed for Military, Aviation, Aerospace, Life-dependant Medical applications or any application requiring high reliability where component failure could result in loss of life and/or property. For applications requiring high reliability and/or presenting an extreme operating environment, written consent and authorization from Abracon is required. Please contact Abracon for more information.

ABRACON LLC
The Power of Linking Together

5101 Hidden Creek Lane Spicewood TX 78669
Phone: 512-371-6159 | Fax: 512-351-8858
For terms and conditions of sale please visit:
www.abracon.com

REVISED: 11.15.2016

ABRACON IS ISO9001-2008 CERTIFIED