General Description

The MAX705–MAX708/MAX813L microprocessor (µP) supervisory circuits reduce the complexity and number of components required to monitor power-supply and battery functions in µP systems. These devices significantly improve system reliability and accuracy compared to separate ICs or discrete components.

The MAX705/MAX706/MAX813L provide four functions:

1) A reset output during power-up, power-down, and brownout conditions.
2) An independent watchdog output that goes low if the watchdog input has not been toggled within 1.6 seconds.
3) A 1.25V threshold detector for power-fail warning, low-battery detection, or for monitoring a power supply other than +5V.
4) An active-low manual-reset input.

The MAX707/MAX708 are the same as the MAX705/MAX706, except an active-high reset is substituted for the watchdog timer. The MAX813L is the same as the MAX705, except RESET is provided instead of $\overline{\text{RESET}}$.

Two supply-voltage monitor levels are available: The MAX705/MAX707/MAX813L generate a reset pulse when the supply voltage drops below 4.65V, while the MAX706/MAX708 generate a reset pulse below 4.40V. All four parts are available in 8-pin DIP, SO, and µMAX® packages.

Applications

- Computers
- Controllers
- Intelligent Instruments
- Critical µP Power Monitoring

***Pin Configurations* appear at end of data sheet.**

µMAX is a registered trademark of Maxim Integrated Products, Inc.

Benefits and Features

- Supervisory-Function Integration Significantly Improves System Reliability While Reducing Board Space
  - µMAX Package
  - Guaranteed RESET Valid at V_{CC} = 1V
    - 200ms Reset Pulse Width
    - Debounced TTL/CMOS-Compatible Manual-Reset Input
    - Active-High Reset Output (MAX707/MAX708/MAX813L)
  - Precision-Supply Voltage Monitor
    - 4.65V (MAX705/MAX707/MAX813L)
    - 4.40V (MAX706/MAX708)
  - Voltage Monitor for Power-Fail or Low-Battery Warning

Ordering Information

PART	TEMP RANGE	PIN-PACKAGE
MAX705CPA	0°C to +70°C	8 Plastic DIP
MAX705CSA	0°C to +70°C	8 SO
MAX705CUA	0°C to +70°C	8 µMAX
MAX705C/D	0°C to +70°C	Dice*

**Dice are specified at T_A = +25°C.*

***Contact factory for availability and processing to MIL-STD-883. Devices in PDIP, SO, and µMAX packages are available in both leaded and lead(Pb)-free/RoHS-compliant packaging. Specify lead-free by adding the + symbol at the endof the part number when ordering.*

Lead-free packaging is not available for CERDIP packages.

***Ordering Information* continued at end of data sheet.**

Typical Operating Circuit

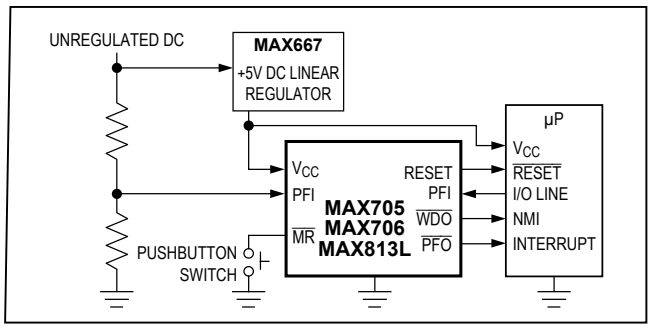

19-4334; Rev. 10; 4/15

sales@prom-elec.com / ООО ПРОМЭЛЕКТРОНИКА

Absolute Maximum Ratings

Terminal Voltage (with respect to GND)
- V_{CC} ..... -0.3V to 6.0V
- All Other Inputs (Note 1) ..... -0.3V to (V_{CC} + 0.3V)

Input Current
- V_{CC} 20mA
- GND 20mA

Output Current (all outputs) 20mA

Continuous Power Dissipation (T_A = +70°C)
- Plastic DIP (derate 9.09mW/°C above +70°C) 727mW
- SO (derate 5.88mW/°C above +70°C) 471mW
- µMAX (derate 4.10mW/°C above +70°C) 330mW
- CERDIP (derate 8.00mW/°C above +70°C) 640mW

Operating Temperature Ranges
- MAX70_C__, MAX813LC__ ..... 0°C to +70°C
- MAX70_E__, MAX813LE__ ..... -40°C to +85°C
- MAX70_MJA ..... -55°C to +125°C

Storage Temperature Range ..... -65°C to +160°C

Lead Temperature (soldering, 10s) ..... +300°C

Soldering Temperature (reflow)
- Lead(Pb)-free ..... +260°C
- Containing Lead(Pb) ..... +240°C

Note 1: The input-voltage limits on PFI and $\overline{MR}$ can be exceeded if the input current is less than 10mA.

Stresses beyond those listed under "Absolute Maximum Ratings" may cause permanent damage to the device. These are stress ratings only, and functional operation of the device at these or any other conditions beyond those indicated in the operational sections of the specifications is not implied. Exposure to absolute maximum rating conditions for extended periods may affect device reliability.

Electrical Characteristics

(V_{CC} = 4.75V to 5.5V for MAX705/MAX707/MAX813L, V_{CC} = 4.5V to 5.5V for MAX706/MAX708, T_A = T_{MIN} to T_{MAX}, unless otherwise noted.)

PARAMETER	SYMBOL	CONDITIONS	MIN	TYP	MAX	UNITS
Operating Voltage Range	V_{CC}	MAX70_C	1.0		5.5	V
		MAX813LC	1.1		5.5	
		MAX70_E/M, MAX813LE/M	1.2		5.5	
Supply Current	I_{SUPPLY}	MAX705C, MAX706C, MAX813LC		150	350	µA
		MAX705E/M, MAX706E/M, MAX813LE/M		150	500	
		MAX707C, MAX708C		50	350	
		MAX707E/M, MAX708E/M		50	500	
Reset Threshold (Note 2)	V_{RT}	MAX705, MAX707, MAX813L	4.50	4.65	4.75	V
		MAX706, MAX708	4.25	4.40	4.50	
Reset Threshold Hysteresis (Note 2)				40		mV
Reset Pulse Width (Note 2)	t_{RS}		140	200	280	ms
$\overline{RESET}$ Output Voltage		I_{SOURCE} = 800µA	V_{CC} - 1.5			V
		I_{SINK} = 3.2mA			0.4	
		MAX70_C, V_{CC} = 1V, I_{SINK} = 50µA			0.3	
		MAX70_E/M, V_{CC} = 1.2V, I_{SINK} = 100µA			0.3	
RESET Output Voltage		MAX707, MAX708, I_{SOURCE} = 800µA	V_{CC} - 1.5			V
		MAX707, MAX708, I_{SINK} = 1.2mA			0.4	
		MAX813LC, I_{SOURCE} = 4µA, V_{CC} = 1.1V	0.8			
		MAX813LE/M, I_{SOURCE} = 4µA, V_{CC} = 1.2V	0.9			
		MAX813L, I_{SOURCE} = 800µA	V_{CC} - 1.5			
		MAX813L, I_{SINK} = 3.2mA			0.4	

Electrical Characteristics (continued)

(V_{CC} = 4.75V to 5.5V for MAX705/MAX707/MAX813L, V_{CC} = 4.5V to 5.5V for MAX706/MAX708, T_A = T_{MIN} to T_{MAX}, unless otherwise noted.)

PARAMETER		SYMBOL	CONDITIONS	MIN	TYP	MAX	UNITS
Watchdog Timeout Period		t_{WD}	MAX705, MAX706, MAX813L	1.00	1.60	2.25	s
WDI Pulse Width		t_{WP}	V_{IL} = 0.4V, V_{IH} = (V_{CC}) (0.8)	50			ns
WDI Input Threshold	Low		MAX705, MAX706, MAX813L, V_{CC} = 5V			0.8	V
	High			3.5			
WDI Input Current			MAX705, MAX706, MAX813L, V_{CC} = 5V		50	150	µA
			MAX705, MAX706, MAX813L, WDI = 0V	-150	-50		
$\overline{WDO}$ Output Voltage			MAX705, MAX706, MAX813L, I_{SOURCE} = 800µA	V_{CC} - 1.5			V
			MAX705, MAX706, MAX813L, I_{SINK} = 1.2mA			0.4	
$\overline{MR}$ Pull-Up Current			$\overline{MR}$ = 0V	100	250	600	µA
$\overline{MR}$ Pulse Width		t_{MR}		150			ns
$\overline{MR}$ Input Threshold	Low					0.8	V
	High			2.0			
$\overline{MR}$ to Reset Out Delay (Note 2)		t_{MD}				250	ns
PFI Input Threshold			V_{CC} = 5V	1.20	1.25	1.30	V
PFI Input Current				-25.00	+0.01	+25.00	nA
$\overline{PFO}$ Output Voltage			I_{SOURCE} = 800µA	V_{CC} - 1.5			V
			I_{SINK} = 3.2mA			0.4	

Note 2: Applies to both $\overline{RESET}$ in the MAX705–MAX708 and RESET in the MAX707/MAX708/MAX813L.

Typical Operating Characteristics

MAX705/MAX707
RESET OUTPUT VOLTAGE vs. SUPPLY VOLTAGE

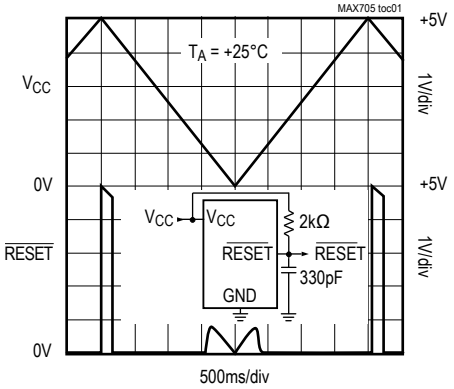

MAX705/MAX707
RESET RESPONSE TIME

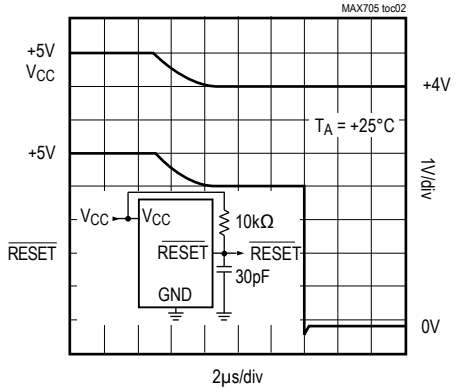

POWER-FAIL COMPARATOR
DE-ASSERTION RESPONSE TIME

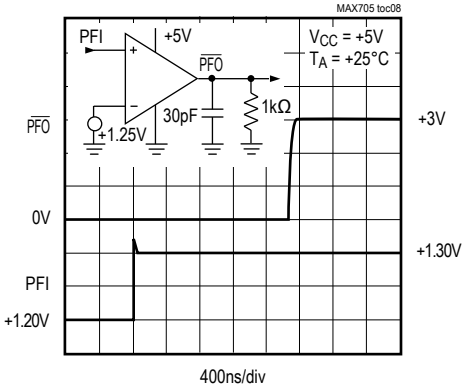

POWER-FAIL COMPARATOR
ASSERTION RESPONSE TIME

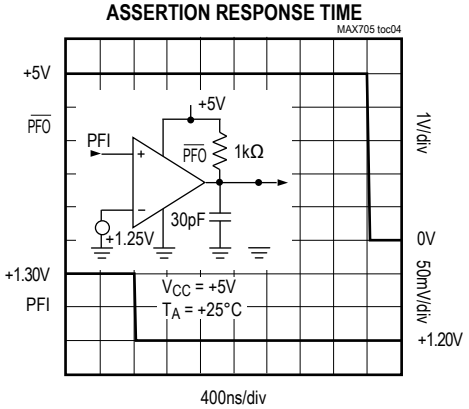

MAX707
RESET, RESET ASSERTION

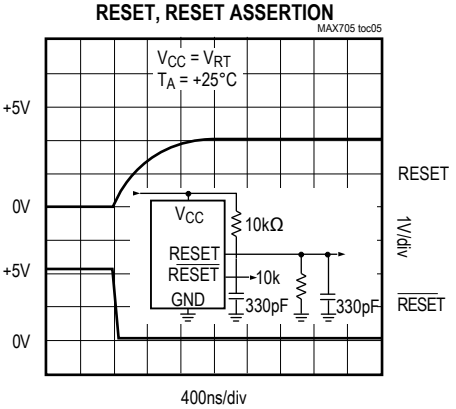

MAX707
RESET, RESET DE-ASSERTION

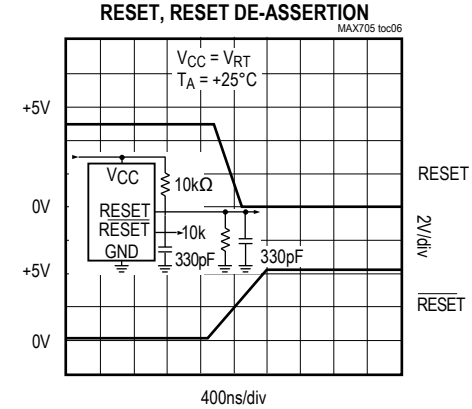

MAX707/MAX708/MAX813L
RESET OUTPUT VOLTAGE vs. SUPPLY VOLTAGE

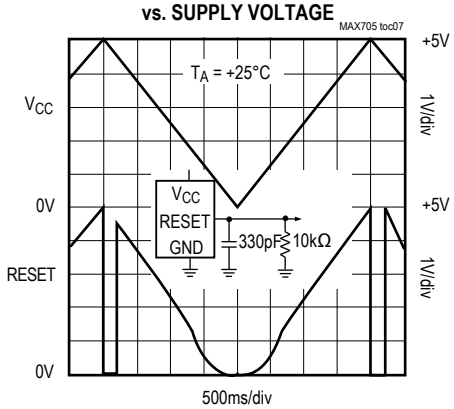

MAX813L
RESET RESPONSE TIME

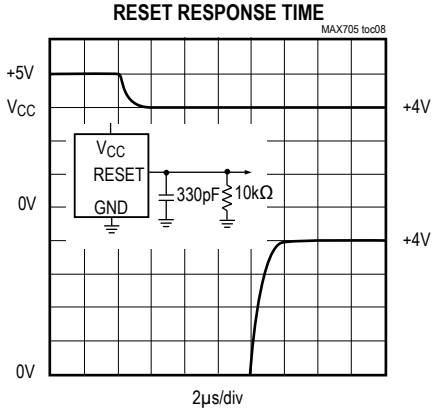

Pin Description

PIN						NAME	FUNCTION
MAX705/MAX706		MAX707/MAX708		MAX813L			
DIP/SO	µMAX	DIP/SO	µMAX	DIP/SO	µMAX		
1	3	1	3	1	3	$\overline{MR}$	Manual-Reset Input triggers a reset pulse when pulled below 0.8V. This active-low input has an internal 250µA pullup current. It can be driven from a TTL or CMOS logic line, as well as shorted to ground with a switch.
2	4	2	4	2	4	V_{CC}	+5V Supply Input
3	5	3	5	3	5	GND	0V Ground Reference for all signals
4	6	4	6	4	6	PFI	Power-Fail Voltage-Monitor Input. When PFI is less than 1.25V, $\overline{PFO}$ goes low. Connect PFI to GND or V_{CC} when not used.
5	7	5	7	5	7	$\overline{PFO}$	Power-Fail Output goes low and sinks current when PFI is less than 1.25V; otherwise $\overline{PFO}$ stays high.
6	8	—	—	6	8	$\overline{WDI}$	Watchdog Input. If WDI remains high or low for 1.6sec, the internal watchdog timer runs out and WDO goes low (Figure 1). Floating WDI or connecting WDI to a high-impedance three-state buffer disables the watchdog feature. The internal watchdog timer clears whenever reset is asserted, WDI is three stated, or WDI sees a rising or falling edge.
—	—	6	—	—	—	N.C.	No Connect
7	1	7	1	—	—	$\overline{RESET}$	Active-Low Reset Output pulses low for 200ms when triggered, and stays low whenever V_{CC} is below the reset threshold (4.65V in the MAX705 and 4.40V in the MAX706). It remains low for 200ms after V_{CC} rises above the reset threshold or MR goes from low to high (Figure 3). A watchdog timeout will not trigger $\overline{RESET}$ unless $\overline{WDO}$ is connected to MR.
8	2	—	—	8	2	$\overline{WDO}$	Watchdog Output pulls low when the internal watchdog timer finishes its 1.6sec count and does not go high again until the watchdog is cleared. $\overline{WDO}$ also goes low during low-line conditions. Whenever V_{CC} is below the reset threshold, $\overline{WDO}$ stays low; however, unlike $\overline{RESET}$, $\overline{WDO}$ does not have a minimum pulse width. As soon as V_{CC} rises above the reset threshold, $\overline{WDO}$ goes high with no delay.
—	—	8	2	7	1	RESET	Active-High RESET Output is the inverse of $\overline{RESET}$. Whenever RESET is high, $\overline{RESET}$ is low, and vice versa (Figure 2). The MAX813L has a RESET output only.

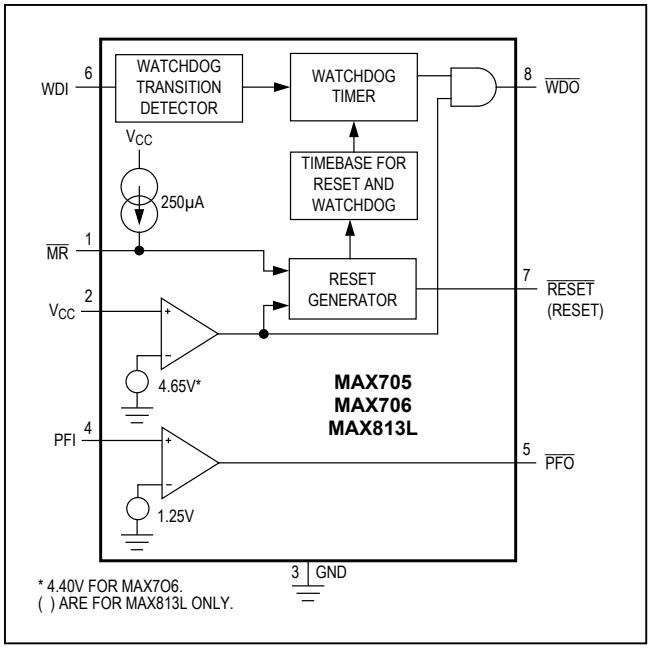

Figure 1. MAX705/MAX706/MAX813L Block Diagram

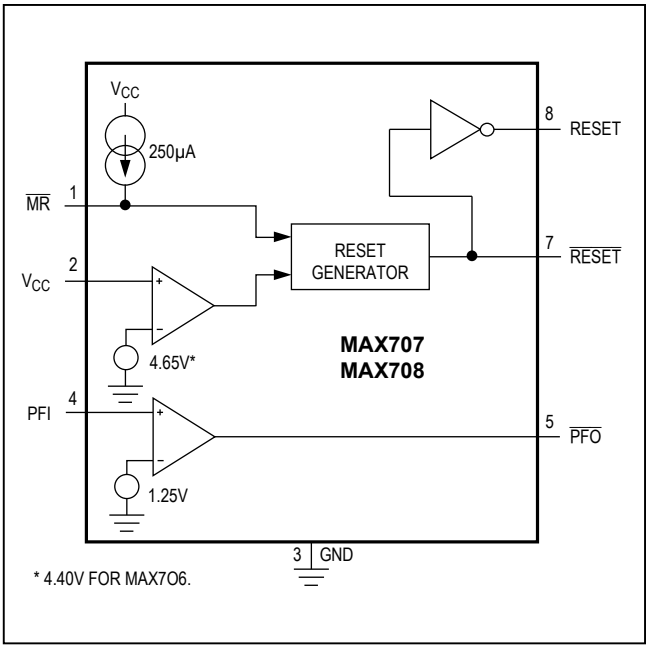

Figure 2. MAX707/MAX708 Block Diagram

Detailed Description

Reset Output

A microprocessor's (µP's) reset input starts the µP in a known state. Whenever the µP is in an unknown state, it should be held in reset. The MAX705–MAX708/MAX813L assert reset during power-up and prevent code execution errors during power-down or brownout conditions.

On power-up, once V_{CC} reaches 1V, $\overline{RESET}$ is a guaranteed logic low of 0.4V or less. As V_{CC} rises, $\overline{RESET}$ stays low. When V_{CC} rises above the reset threshold, an internal timer releases $\overline{RESET}$ after about 200ms. $\overline{RESET}$ pulses low whenever V_{CC} dips below the reset threshold, i.e. brownout condition. If brownout occurs in the middle of a previously initiated reset pulse, the pulse continues for at least another 140ms. On power-down, once V_{CC} falls below the reset threshold, RESET stays low and is guaranteed to be 0.4V or less until V_{CC} drops below 1V.

The MAX707/MAX708/MAX813L active-high RESET output is simply the complement of the $\overline{RESET}$ output, and is guaranteed to be valid with V_{CC} down to 1.1V. Some µPs, such as Intel's 80C51, require an active-high reset pulse.

Watchdog Timer

The MAX705/MAX706/MAX813L watchdog circuit monitors the µP's activity. If the µP does not toggle the watchdog input (WDI) within 1.6sec and WDI is not three stated, $\overline{WDO}$ goes low. As long as $\overline{RESET}$ is asserted or the WDI input is three stated, the watchdog timer stays cleared and will not count. As soon as reset is released and WDI is driven high or low, the timer starts counting. Pulses as short as 50ns can be detected.

Typically, $\overline{WDO}$ is not connected to the nonmaskable interrupt input (NMI) of a µP. When V_{CC} drops below the reset threshold, $\overline{WDO}$ goes low whether or not the watchdog timer has timed out yet. Normally this would trigger an NMI interrupt, but $\overline{RESET}$ goes low simultaneously, and thus overrides the NMI interrupt.

If WDI is left unconnected, $\overline{WDO}$ can be used as a low-line output. Since floating WDI disables the internal timer, $\overline{WDO}$ goes low only when V_{CC} falls below the reset threshold, thus functioning as a low-line output.

The MAX705/MAX706 have a watchdog timer and a $\overline{RESET}$ output. The MAX707/MAX708 have both active-high and active-low reset outputs. The MAX813L has both an active-high reset output and a watchdog timer.

Manual Reset

The manual-reset input ($\overline{MR}$) allows reset to be triggered by a pushbutton switch. The switch is effectively debounced by the 140ms minimum reset pulse width. $\overline{MR}$ is TTL/CMOS-logic compatible, so it can be driven by an external logic line. $\overline{MR}$ can be used to force a watchdog timeout to generate a reset pulse in the MAX705/ MAX706/ MAX813L. Simply connect $\overline{WDO}$ to $\overline{MR}$.

Power-Fail Comparator

The power-fail comparator can be used for various purposes because its output and noninverting input are not internally connected. The inverting input is internally connected to a 1.25V reference.

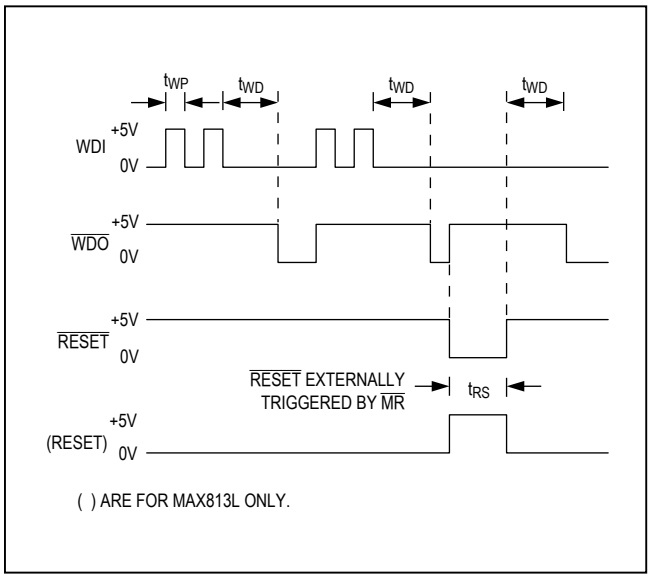

Figure 3. MAX705/MAX706/MAX813L Watchdog Timing

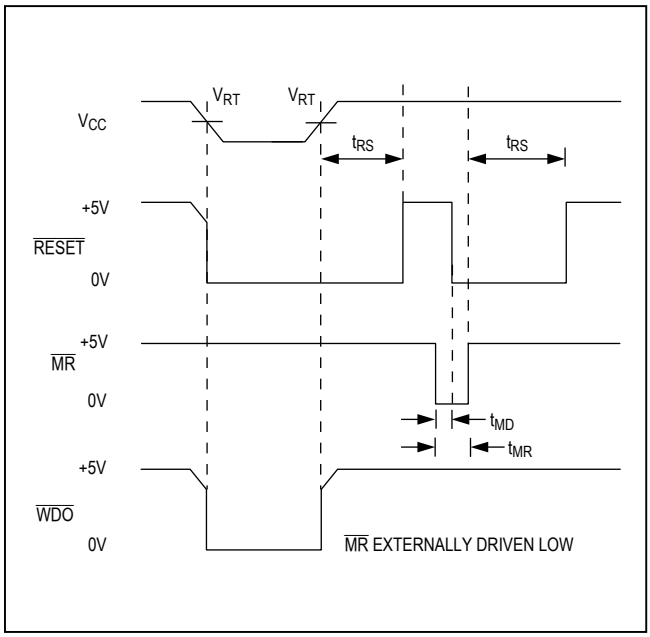

Figure 4. MAX705/MAX706 RESET, MR, and WDO Timing with WDI Three Stated. The MAX707/MAX708/MAX813L RESET output is the inverse of RESET shown.

To build an early-warning circuit for power failure, connect the PFI pin to a voltage divider (see *Typical Operating Circuit*). Choose the voltage divider ratio so that the voltage at PFI falls below 1.25V just before the +5V regulator drops out. Use PFO to interrupt the µP so it can prepare for an orderly power-down.

Applications Information

Ensuring a Valid RESET Output Down to V_{CC} = 0V

When V_{CC} falls below 1V, the MAX705–MAX708 RESET output no longer sinks current—it becomes an open circuit. High-impedance CMOS logic inputs can drift to undetermined voltages if left undriven. If a pulldown resistor is added to the RESET pin, as shown in Figure 5, any stray charge or leakage currents will be drained to ground, holding RESET low. Resistor value (R1) is not critical. It should be about 100kΩ, large enough not to load RESET and small enough to pull RESET to ground.

Monitoring Voltages Other Than the Unregulated DC Input

Monitor voltages other than the unregulated DC by connecting a voltage-divider to PFI and adjusting the ratio appropriately. If required, add hysteresis by connecting a resistor (with a value approximately 10 times the sum of the two resistors in the potential divider network) between PFI and PFO. A capacitor between PFI and GND reduces the power-fail circuit's sensitivity to high-frequency noise on the line being monitored. RESET can be asserted on other voltages in addition to the +5V V_{CC} line. Connect PFO to MR to initiate a RESET pulse when PFI drops below 1.25V. Figure 6 shows the MAX705–MAX708 configured to assert RESET when the +5V supply falls below the reset threshold, or when the +12V supply falls below approximately 11V.

Monitoring a Negative Voltage

The power-fail comparator can also monitor a negative supply rail (Figure 7). When the negative rail is good (a negative voltage of large magnitude), PFO is low, and when the negative rail is degraded (a negative voltage of lesser magnitude), PFO is high. By adding the resistors and transistor as shown, a high PFO triggers a reset. As long as PFO remains high, the MAX705–MAX708/MAX813L keep reset asserted (RESET = low, RESET = high). Note that this circuit's accuracy depends on the PFI threshold tolerance, the V_{CC} line, and the resistors.

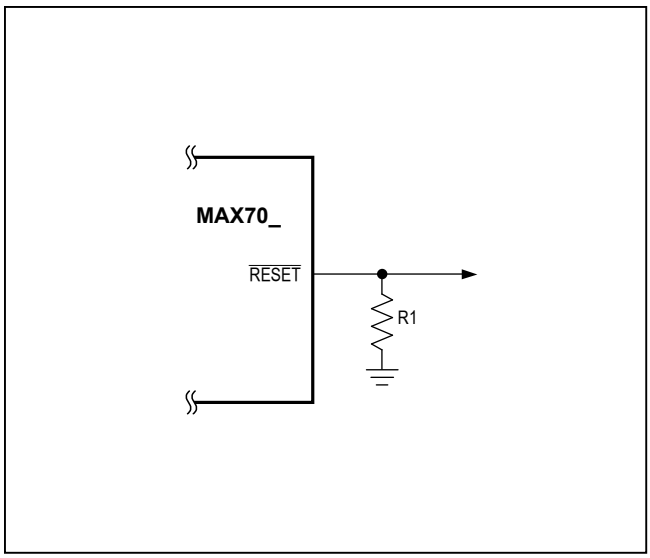

Figure 5. RESET Valid to Ground Circuit

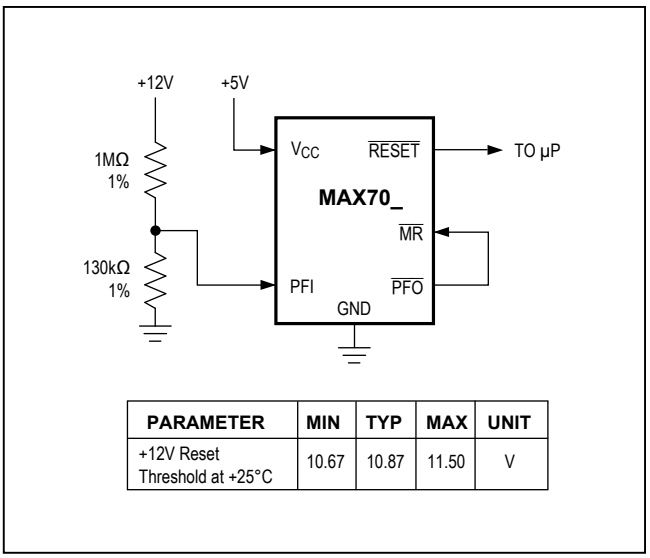

PARAMETER	MIN	TYP	MAX	UNIT
+12V Reset Threshold at +25°C	10.67	10.87	11.50	V

Figure 6. Monitoring Both +5V and +12V

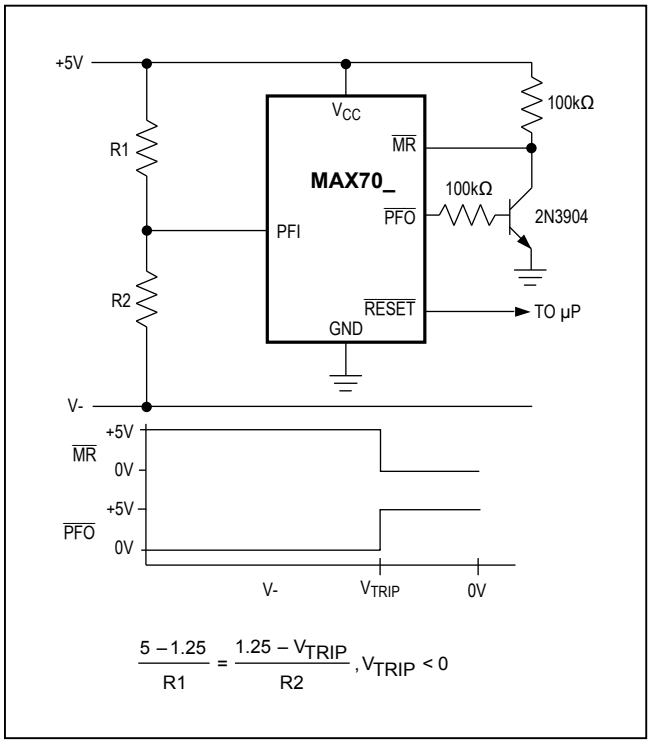

Figure 7. Monitoring a Negative Voltage

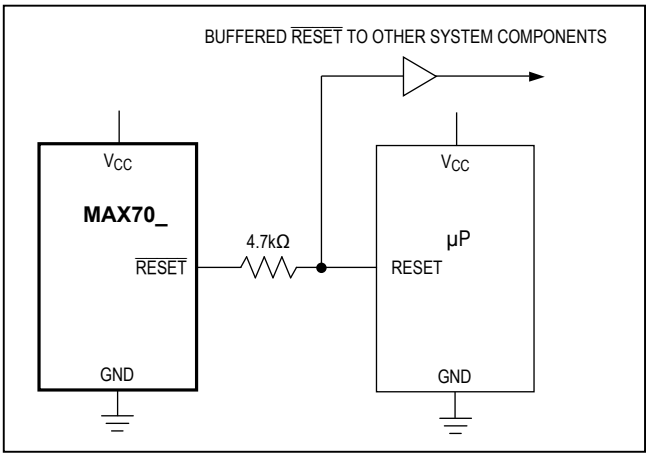

Figure 6. Monitoring Both +5V and +12V

Interfacing to µPs with Bidirectional Reset Pins

µPs with bidirectional reset pins, such as the Motorola 68HC11 series, can contend with the MAX705–MAX708 RESET output. If, for example, the RESET output is driven high and the µP wants to pull it low, indeterminate logic levels may result. To correct this, connect a 4.7kΩ resistor between the RESET output and the µP reset I/O, as in Figure 8. Buffer the RESET output to other system components.

Ordering Information (continued)

PART	TEMP RANGE	PIN-PACKAGE
MAX705EPA	-40°C to +85°C	8 Plastic DIP
MAX705ESA	-40°C to +85°C	8 SO
MAX705EUA	-40°C to +85°C	8 µMAX
MAX705MJA	-55°C to +125°C	8 CERDIP**
MAX706CPA	0°C to +70°C	8 Plastic DIP
MAX706CSA	0°C to +70°C	8 SO
MAX706CUA	0°C to +70°C	8 µMAX
MAX706C/D	0°C to +70°C	Dice*
MAX706EPA	-40°C to +85°C	8 Plastic DIP
MAX706ESA	-40°C to +85°C	8 SO
MAX706EUA	-40°C to +85°C	8 µMAX
MAX706MJA	-55°C to +125°C	8 CERDIP**
MAX707CPA	0°C to +70°C	8 Plastic DIP
MAX707CSA	0°C to +70°C	8 SO
MAX707CUA	0°C to +70°C	8 µMAX
MAX707C/D	0°C to +70°C	Dice*
MAX707EPA	-40°C to +85°C	8 Plastic DIP
MAX707ESA	-40°C to +85°C	8 SO
MAX707EUA	-40°C to +85°C	8 µMAX
MAX707MJA	-55°C to +125°C	8 CERDIP**
MAX708CPA	0°C to +70°C	8 Plastic DIP
MAX708CSA	0°C to +70°C	8 SO
MAX708CUA	0°C to +70°C	8 µMAX
MAX708C/D	0°C to +70°C	Dice*
MAX708EPA	-40°C to +85°C	8 Plastic DIP
MAX708ESA	-40°C to +85°C	8 SO
MAX708EUA	-40°C to +85°C	8 µMAX
MAX708MJA	-55°C to +125°C	8 CERDIP**
MAX813LCPA	0°C to +70°C	8 Plastic DIP
MAX813LCSA	0°C to +70°C	8 SO
MAX813LCUA	0°C to +70°C	8 µMAX
MAX813LC/D	0°C to +70°C	Dice*
MAX813LEPA	-40°C to +85°C	8 Plastic DIP
MAX813LESA	-40°C to +85°C	8 SO
MAX813LEUA	-40°C to +85°C	8 µMAX
MAX813LMJA	-55°C to +125°C	8 CERDIP**

**Dice are specified at T_A = +25°C.*

***Contact factory for availability and processing to MIL-STD-883. Devices in PDIP, SO and µMAX packages are available in both leaded and lead-free packaging. Specify lead free by adding the + symbol at the end of the part number when ordering. Lead-free not available for CERDIP package.*

Pin Configurations

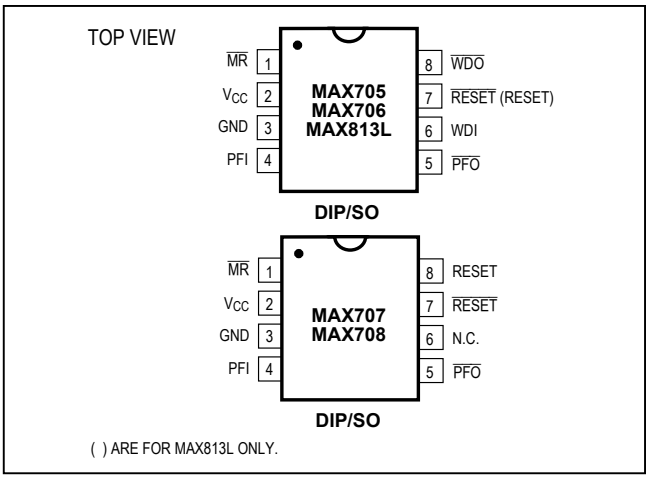

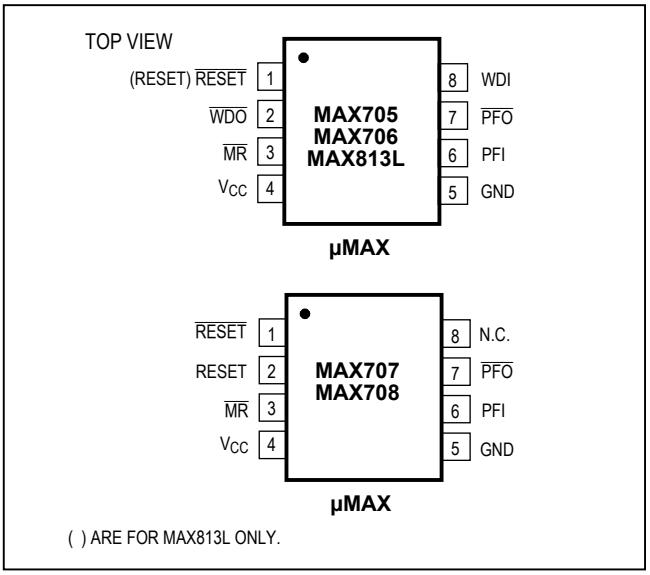

Ordering Information

Part Number	Nominal Reset Threshold (V)	Minimum Reset Pulse Width (ms)	Active-Low Reset	Active-High Reset	$\overline{RESET}$ Valid to V_{CC} = 1V	Nominal Watchdog Timeout Period (sec), if Available	Separate Watchdog Output	Backup-Battery Switch	V_{CC}-to-V_{OUT} On Resistance Max (Ω)	V_{BATT} - to-V_{OUT} On Resistance Max (Ω)	$\overline{CE}$ Write Protect	Power-Fail Comparator	Manual-Reset Input	Low-Line Output	Battery-On Output	I_{SUPPLY} Operating Mode mA max (typ)	I_{SUPPLY} Backup Mode µA max (typ)	Pins	Price† 1000-up ($)
MAX1232	4.37/4.62	250	✓	✓	✓	0.15/0.6/1.2							✓			0.2(0.05)		8	1.71
MAX690A/692A	4.65/4.40	140	✓		✓	1.6		✓	10	400		✓				0.35(0.2)	5(0.05)	8	3.26
MAX690R/S/T	2.63/2.93/3.08	140	✓		✓	1.6		✓	6	400		✓				0.5(0.4)	1(0.4)	8	3.23
MAX691A/693A	4.65/4.40	140/adj.	✓	✓	✓	1.6/adj.	✓	✓	1.2	25	✓/10ns	✓			✓	0.1(0.035)	5(0.04)	16	3.61
MAX1691	The MAX1691 is a module with the MAX691A and a 125mAh lithium battery																	16	††
MAX696	Adj.	35/adj.	✓	✓		1.6/adj.	✓	✓				✓			✓			16	3.55
MAX697	Adj.	35/adj.	✓	✓		1.6/adj.	✓				✓	✓						16	3.58
MAX700	4.65/adj.	200	✓	✓									✓			0.2(0.1)		8	2.17
MAX703/704	4.65/4.40	140	✓		✓			✓	10	400		✓	✓			0.35(0.2)	5(0.05)	8	1.38*
MAX704R/S/T	2.63/2.93/3.08	140	✓		✓	1.6	✓	✓	6	400		✓	✓			0.5(0.4)	1(0.4)	8	2.93
MAX705/706	4.65/4.40	140	✓		✓	1.6	✓					✓	✓			0.35(0.2)		8	1.02*
MAX706P	2.63	140		✓	✓	1.6	✓					✓	✓			0.35(0.2)		8	1.71
MAX706R/S/T	2.63/2.93/3.08	140	✓		✓							✓	✓			0.35(0.2)		8	1.71
MAX707/708	4.65/4.40	140	✓	✓	✓							✓	✓			0.35(0.2)		8	0.88*
MAX708R/S/T	2.63/2.93/3.08	140	✓	✓	✓							✓	✓			0.35(0.2)		8	1.63
MAX791	4.65	140	✓	✓	✓	1	✓	✓	1.2	25	✓/10ns	✓	✓	✓	✓	0.15(0.06)	5(0.04)	16	3.90
MAX802L/M/R/S/T	4.60/4.40/ 2.63/2.93/3.08	140	✓	✓	✓	1	✓				✓/10ns	✓				0.15(0.07)		16	3.42
MAX793R/S/U/T	2.63/2.93/3.07/3.08	140	✓	✓	✓	1.6	✓	✓	TBD	TBD	✓	✓				TBD	TBD	16	††
MAX794	Adj.	140	✓	✓	✓	1.6	✓	✓	TBD	TBD	✓	✓				TBD	TBD	8	††
MAX795R/S/U/T	2.63/2.93/3.07/3.08	140	✓		✓			✓	TBD	TBD	✓					TBD	TBD	16	††
MAX800L/M	4.60/4.40	140	✓	✓	✓	1.6/adj.	✓	✓	1.2	25	✓/10ns	✓/±2%			✓	0.1(0.035)	5(0.04)	8	3.88
MAX801L/N/M	4.68/4.58/4.43	140	✓/±1.5%		✓	1.6		✓	TBD	TBD						TBD	TBD	8	††
MAX802L/M/R/S/T	4.60/4.40/ 2.63/2.93/3.08	140	✓		✓	1.6		✓	10	400		✓/±2%				0.35(0.2)	5(0.05)	8	3.59
MAX804R/S/T	2.63/2.93/3.08	140		✓	✓	1.6		✓	6	400		✓/±2%				0.5(0.4)	1(0.4)	8	3.66
MAX805L/M/R/S/T	4.65/4.40/ 2.63/2.93/3.08	140		✓	✓	1.6		✓	10	400		✓				0.35(0.2)	5(0.05)	8	3.26
MAX806R/S/T	2.63/2.93/3.08	140	✓	✓	✓			✓	6	400		✓/±2%	✓			0.5(0.4)	1(0.4)	8	3.90
MAX807L/N/M	4.68/4.58/4.43	140	✓/±1.5%	✓/±1.5%	✓	1.6	✓	✓	TBD	TBD	✓	✓	✓	✓	✓	TBD	TBD	8	††
MAX808L/N/M	4.68/4.58/4.43	140	✓/±1.5%		✓			✓	TBD	TBD	✓			✓		TBD	TBD	16	††
MAX809L/M/R/S/T	4.65/4.40/ 2.63/2.93/3.08	140	✓		✓											0.06 (0.024)		3	††
MAX810L/M/R/S/T	4.65/4.40/ 2.63/2.93/3.08	140		✓	✓											0.06 (0.024)		3	††
MAX813L	4.65	140			✓	1.6	✓					✓/±2%	✓			0.35(0.2)		8	1.02*
MAX814K/L/N/T	4.80/4.70/4.55/3.03	140	✓/±1%	✓/±1%	✓							✓/±2%	✓	✓		TBD	TBD	8	††
MAX815K/L/N/T	4.80/4.70/4.55/3.03	140	✓/±1%		✓	1.6	✓					✓/±2%	✓			TBD	TBD	8	††
MAX816	Adj./±1%	140	✓	✓	✓							✓/±2%	✓			TBD	TBD	8	††
MAX820L/M/R/S/T	4.65/4.40/ 2.63/2.93/3.08	140	✓	✓	✓	1	✓				✓/10ns	✓/±2%	✓	✓		0.15 (0.07)		16	3.82
MXD1210	4.37/4.62							✓	2.5	667	✓					0.5 (0.23)	0.1(0.002)	8	2.44

Package Information

For the latest package outline information and land patterns (footprints), go to **www.maximintegrated.com/packages**. Note that a "+", "#", or "-" in the package code indicates RoHS status only. Package drawings may show a different suffix character, but the drawing pertains to the package regardless of RoHS status.

PACKAGE TYPE	PACKAGE CODE	OUTLINE NO.
8 µMAX	U8+1	21-0036
8 Plastic DIP	P8+1	21-0043
8 SO	S8+2	21-0041

Chip Topography

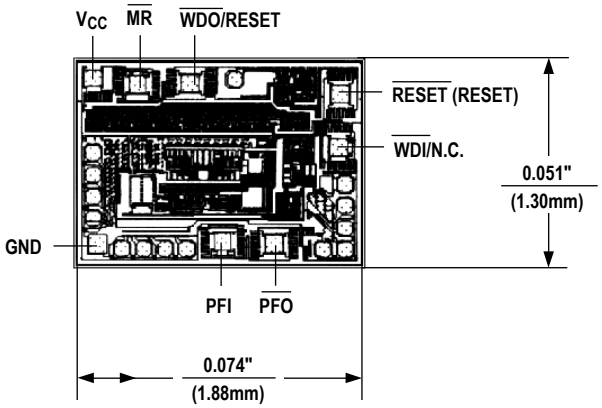

( ) ARE FOR MAX813L ONLY.
TRANSISTOR COUNT: 572
SUBSTRATE MUST BE LEFT UNCONNECTED.

Revision History

REVISION NUMBER	REVISION DATE	DESCRIPTION	PAGES CHANGED
0	2/92	Initial release	—
8	3/10	Updated the *Features*, *Absolute Maximum Ratings*, *Typical Operating Characteristics*, Figures 3, 7, 8, and the *Package Information* sections	1, 2, 4, 7, 8, 10
9	1/13	Updated package code for 8 SO package	11
10	4/15	Deleted “Automotive Systems” from *Applications* and updated *Benefits and Features* sections	1

For pricing, delivery, and ordering information, please contact Maxim Direct at 1-888-629-4642, or visit Maxim Integrated’s website at www.maximintegrated.com.

Maxim Integrated cannot assume responsibility for use of any circuitry other than circuitry entirely embodied in a Maxim Integrated product. No circuit patent licenses are implied. Maxim Integrated reserves the right to change the circuitry and specifications without notice at any time. The parametric values (min and max limits) shown in the Electrical Characteristics table are guaranteed. Other parametric values quoted in this data sheet are provided for guidance.

Maxim Integrated and the Maxim Integrated logo are trademarks of Maxim Integrated Products, Inc. © 2015 Maxim Integrated Products, Inc.