df Electric

NH KNIFE-BLADE

FUSE LINKS & FUSE BASES

aM

NH 500V/690V

fuse links

NH NH4

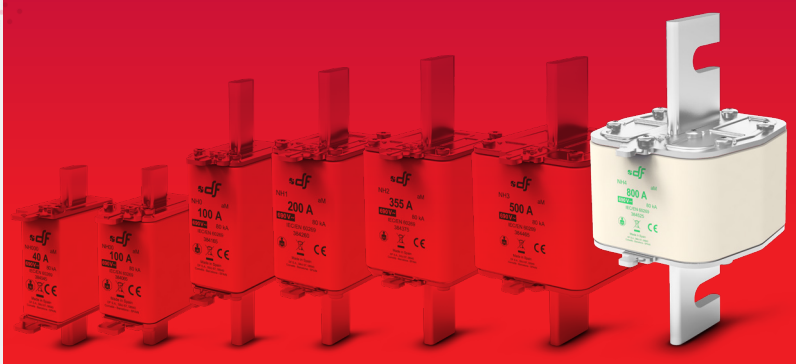

NH000 NH00 NH0 NH1 NH2 NH3 NH4 NH4 WITH STRIKER

PROTECTING THE WORLD

dfelectric.es

sales@prom-elec.com / ООО ПРОМЭЛЕКТРОНИКА

df Electric

aM
NH 500V/690V
fuse links

NH KNIFE-BLADE

NH4 | NH4 WITH STRIKER

NH4 | NH4 WITH STRIKER

RATED VOLTAGE
690V AC
500V AC

RATED CURRENT
400A...1250A

BREAKING CAPACITY
80kA @ 690V
120kA @ 500V

STANDARDS
IEC/EN 60269-1
IEC/EN 60269-2

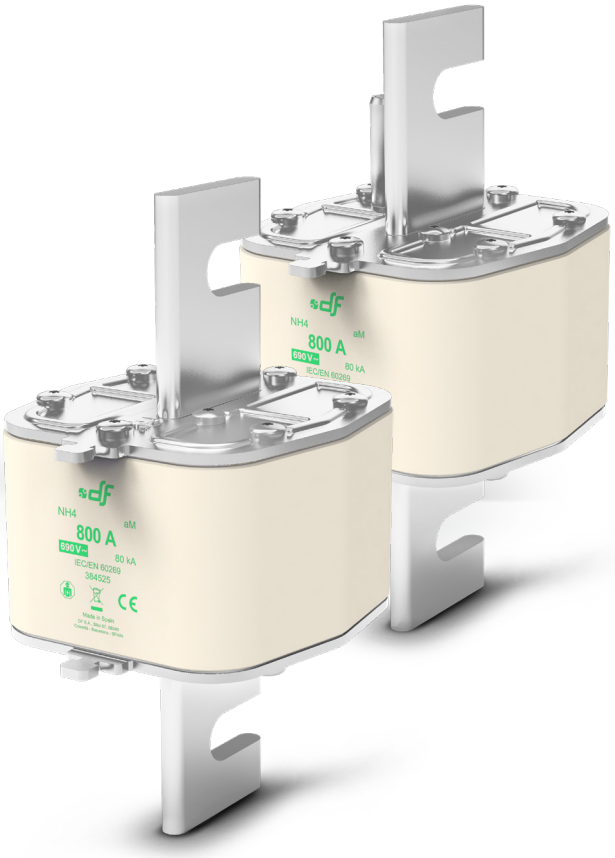

Knife type NH aM 500V/690V fuse links with top indicator

These high breaking capacity fuse-links are intended for short circuit protection in motors, transformer and other load with high inrush currents, with rated voltages up to 690V (+5%).

The rated breaking capacity is 80kA at 690V or 120kA at 500V. Excellent protection of switchgear (contactor, thermal switch) due to the good current limiting capability and low I^2t values. These fuse links must be associated to an overload device protection (thermal switch).

The range comprises the following fuse links:

→ **Size NH4 aM 500V/690V 400A to 1250A**
→ **Size NH4 with striker gG 500V/690V 400A to 1250A**

Manufactured with ceramic body with high withstand to internal pressure and thermal shock, that allows a high breaking capacity. Knife contacts are made of silver plated copper or brass.

They are manufactured according to IEC/EN60269 Standards and comply with RoHS directive.

RoHS COMPLIANT

Range

	Un	BREAKING CAPACITY	In (A)	REFERENCE	PACKING Uni /BOX
NH4	690V	80kA	400	**384510**	1/6
			500	**384515**	1/6
			630	**384520**	1/6
			800	**384525**	1/6
	500V	120kA	315	**383505**	1/6
			400	**383510**	1/6
			500	**383515**	1/6
			630	**383520**	1/6
			800	**383525**	1/6
			1000	**383530**	1/6
			1250	**383535**	1/6

	Un	BREAKING CAPACITY	In (A)	REFERENCE	PACKING Uni /BOX
NH4 WITH STRIKER	690V	80kA	400	**398510**	1/6
			500	**398515**	1/6
			630	**398520**	1/6
			800	**398525**	1/6
	500V	120kA	315	**397505**	1/6
			400	**397510**	1/6
			500	**397515**	1/6
			630	**397520**	1/6
			800	**397525**	1/6
			1000	**397530**	1/6
			1250	**397535**	1/6

aM
NH 500V/690V
fuse links

NH4 NH4 WITH STRIKER

Dimensions

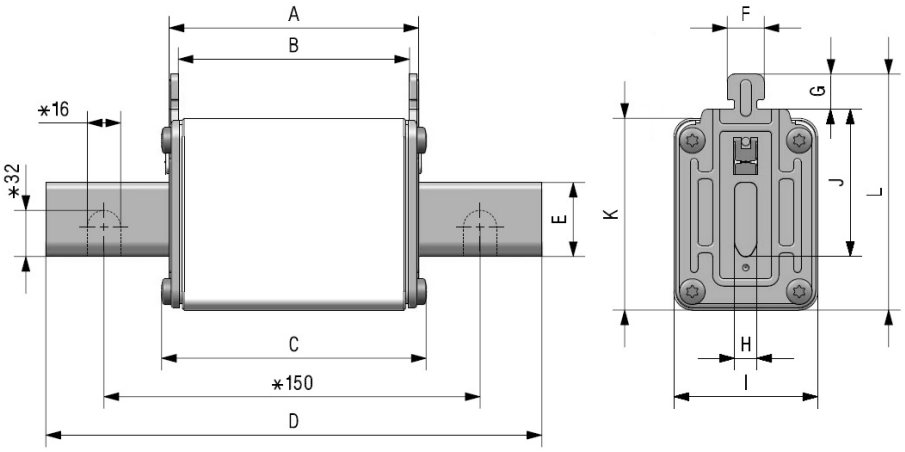

* Only for NH4 fuse links

A	B	C	D	E	F	G	H	I	J	K	L
68	62	76	200	50	10	10	8	102	87	105	120

Weight 2,38kg

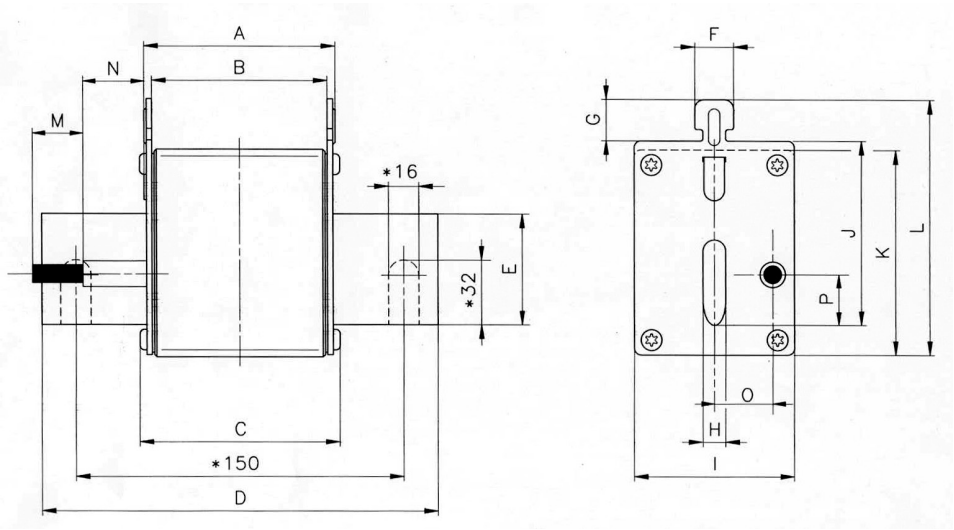

* Only for NH4 fuse links

A	B	C	D	E	F	G	H	I	J	K	L	M	N	O	P
68	62	76	200	50	10	10	8	102	87	105	120	15	39	27,5	14,5

Weight 2,38kg

df Electric

aM
NH 500V/690V
fuse links

NH4 NH4 WITH STRIKER

NH KNIFE-BLADE

Technical data

Rated voltage	690V +5% 500V +10%
Rated current	315A...1250A
Rated breaking capacity	80kA @690V 120kA @500V
Operating class	aM
Rated frequency	42…62Hz
Storage temperature	-40°C ... 90°C
Operating temperature *	-40°C ... 80°C

* For ambient temperatures higher than 25ºC it is necessary to apply a derating in maximum current.

Standards

IEC/EN 60269-1
IEC/EN 60269-2
RoHS Compliant

RoHS COMPLIANT

Materials

Body	Steatite C221
Contact blades	Copper or brass (silver plated)
Plates	Aluminium
Screws	Zinc plated steel

Power dissipation

I_n (A)	POWER DISSIPATION (W)	PREARCING I^2t ≈ 4 ms (A^2s)	TOTAL I^2t 230V (A^2s)	TOTAL I^2t 400V (A^2s)	TOTAL I^2t 500V (A^2s)
315	18,8	463000	871728	1021130	1379149
400	23,5	502000	1080129	1308183	1882500
500	34	760000	1635254	1980516	2850000
630	49	1423000	3061799	3708255	5336250
800	52	1880000	3824516	4567527	6400000
1000	108	4500000	9388131	11282902	-
1250	108	7000000	14641519	17607924	-

* Same data for STRIKER range

aM

NH 500V/690V

fuse links

NH4 NH4 WITH STRIKER

NH KNIFE-BLADE

t-I characteristics

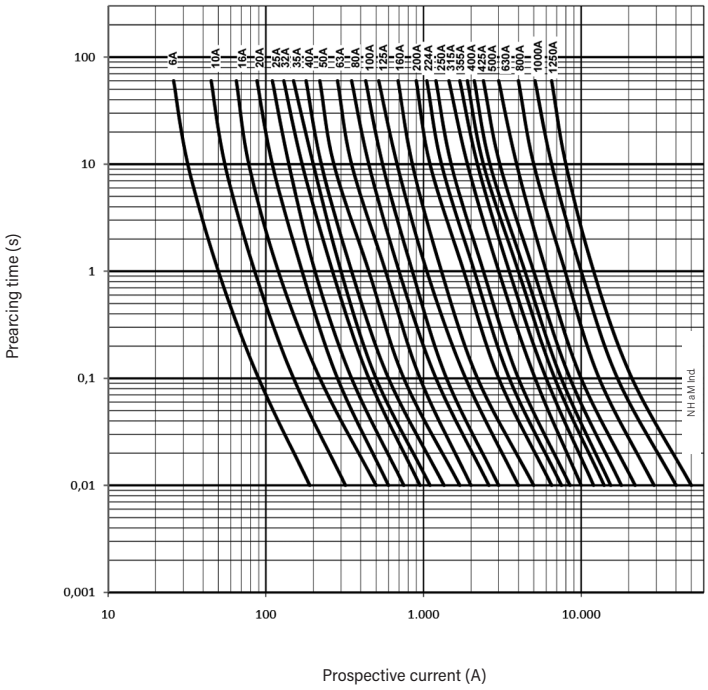

Cut-off characteristics

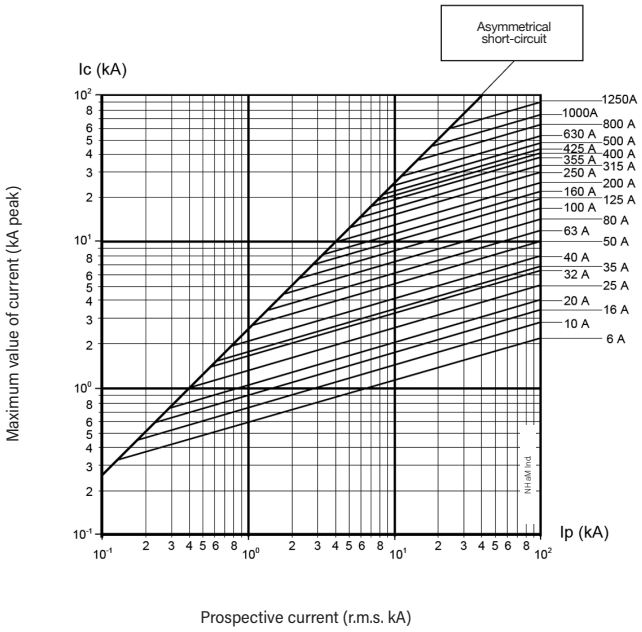

Ambient temperature derating factor

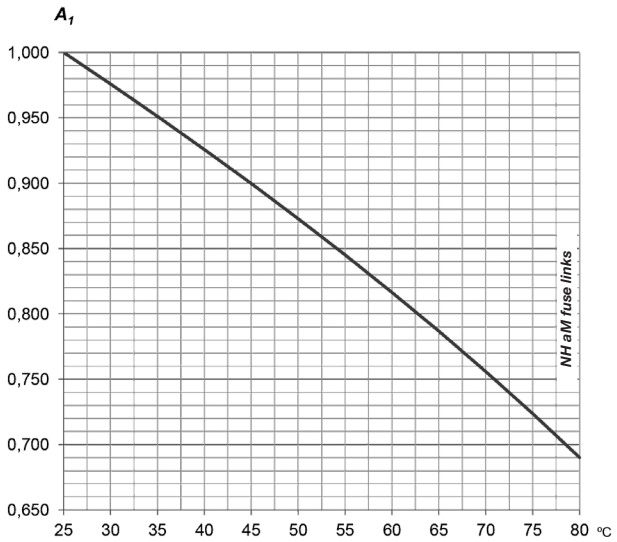

ta (ºC)	A1
25	1,00
30	0,98
35	0,95
40	0,93
45	0,90
50	0,87
55	0,84
60	0,82
65	0,79
70	0,76
75	0,72
80	0,69

PROTECTING THE WORLD

HEAD OFFICE AND FACTORY
SILICI, 67-69
08940 CORNELLA DE LLOBREGAT
BARCELONA · SPAIN
Tel. +34 93 377 85 85
Fax +34 93 377 82 82

INTERNATIONAL SALES
Tel. +34 93 475 08 64
Fax +34 93 480 07 75
export@dfelectric.es

NATIONAL SALES
Tel. 93 475 08 64
Fax 93 480 07 76
comercial@dfelectric.es

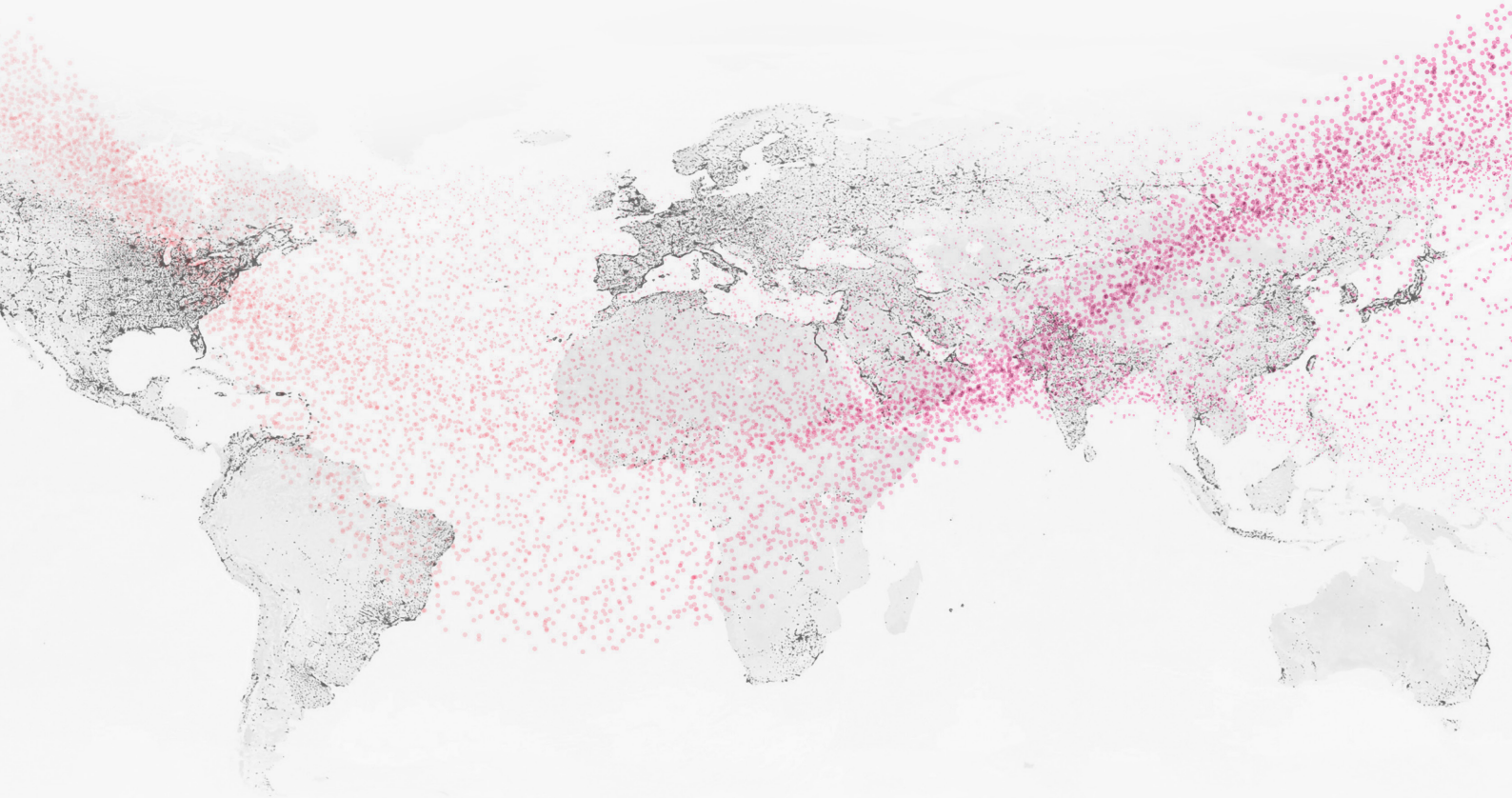

dfelectric.es

FABRICADO EN ESPAÑA · MADE IN SPAIN

According to the waste of electrical and electronic equipment directive, electrical material should not be part of the usual waste. This symbol alerts users that these products should be recycled according to local environmental waste disposal regulations.

The "electro technical expert" logo marked on the products included in this data sheet indicates that the installation of these products must be carried out by expert personnel with specialized knowledge.

To prevent electrical hazards, carry out the installation without voltage.

Safety notice
Please capture the following QR code and read our safety notice carefully before installing our products.

The data reflected in this technical record are subject to the correct installation of the product in accordance with manufacturer's instructions, relevant installation standards and professional practices, maintained and used in applications for which they were made.

The products described in this document have been designed, developed and tested in accordance with specific standard. They are considered components that are integrated as part of installation, machine or equipment. The correct general operation of the referred product is responsibility of the manufacturer of the installation, machine or equipment.

DF ELECTRIC cannot guarantee the characteristics of an installation, machine or equipment that has been designed by a third party. Once a product has been selected, the user must verify that it is appropriate for its application, through the verifications and/or tests that it deems appropriate.

DF ELECTRIC retains the right to change the dimensions, specifications, materials or design of its products at any time with or without notice.

©2020 DF Electric. All rights reserved