Compact ejector

SCPSi 07 G02 NO M12-5

Part no.:10.02.02.04120

https://www.schmalz.com/10.02.02.04120

Compact ejector

Nozzle size: 0,7 mm
Connection: G1/8"(1)-G1/8"(2)
Suction rate (max): 16 l/min
Air consumption (during evac.):
22 l/min
Noise level (free): 63 dB
at operating press.: 2.0 ... 6.0 bar
Vacuum (max): -850 mbar
Control: Normally open
with: digital air-saving function
Electrical connection:
Male connect M12, 5 pol
Protection: IP 65 (with plug)
Connection: M12-5

Design Data

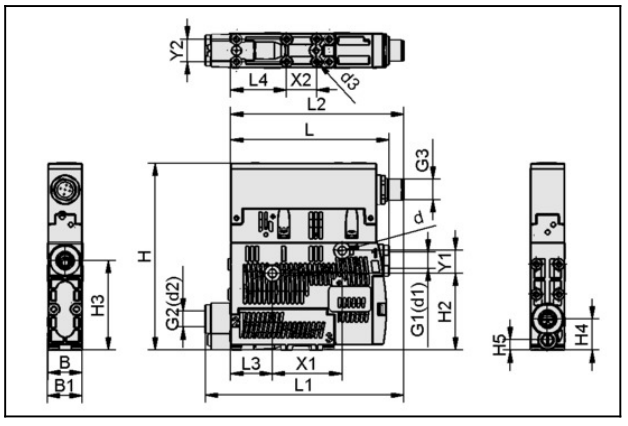

Attribute	Value
B	18 mm
B1	18.6 mm
d	4.4 mm
d3	2.6 mm
G1	G1/8"-IG
G2	G1/8"-F
G3	M12x1-M
H	99 mm
H2	40.8 mm

sales@prom-elec.com / ООО ПРОМЭЛЕКТРОНИКА

Attribute	Value
H3	47.5 mm
H4	16.5 mm
H5	5.5 mm
L	83.8 mm
L1	105 mm
L2	91.5 mm
L3	22 mm
L4	29.5 mm
X1	36.9 mm
X2	16 mm
Y1	12 mm
Y2	12 mm

Technical Data

Attribute	Value
Nozzle size	07
Degree of evacuation	85 %
Suction rate (max.)	0.98 m³/h
Suction rate (max.)	16 l/min
Air consumption suction	1.35 m³/h
Air consumption suction	22 l/min
Air consumption blow off	7.25 m³/h
Max. air consumption blow off	118 l/min
Sound level free	63 dB(A)
Sound level suction	58 dB(A)

Compact ejector

SCPSi 07 G02 NO M12-5

Part no.:10.02.02.04120

https://www.schmalz.com/10.02.02.04120

Attribute	Value
Pressure range (operating pressure)	2.0 ... 6.0 bar
Recomm. internal hose diameter compressed air	4 mm
Recomm. internal hose diameter vacuum	4 mm
Weight	0.195 kg
Operating temperature	0 ... 50 °C
Pressure range (operating pressure)	29.0...87.0
Suction rate (max.)	0.565 cfm
Air consumption suction	0.776 cfm
Air consumption blow off	4.267 cfm
Max. vacuum	-25.1 inHg
Product family	SCPSi

Spare Parts

SD-EINS 15x16.5 SD

Part no.10.02.02.04141

Silencer insert

External diameter D: 15 mm

Length L: 16.5 mm

for: Silencers

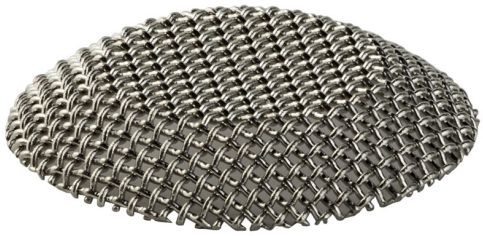

SIEB 11x2 X-5 0.415/0.22
Part no.10.02.02.04404
Screen
External diameter D: 11 mm
Length L: 2 mm
Material: Stainless steel X5 CrNi
Mesh: 0.415 mm
Wire size: 0.22 mm

Accessories

ASK B-M12-5 5000 K-5P
Part no.21.04.05.00080
Connection cable
Interface Connection 1:
Fem connect M12, 5 pol
Cable length: 5000 mm
Interface Connection 2: Cable 5
Material: PUR-Cable
Shape: Straight

ASV SMPI/SCPI 2xS-M12-4
Part no.10.02.02.03490
Connection distributor
for: Ejector SMPI/SCPI
Interface Connection cable:
Fem connect M12, 5 pol
Interface Connection cable:
2xConnect M12, 4 pol
Length L: 1050 mm

Compact ejector

SCPSi 07 G02 NO M12-5

Part no.:10.02.02.04120

https://www.schmalz.com/10.02.02.04120

VFI CN6/4 50

Part no.10.07.01.00241

Vacuum filter with replaceable filter cartridge

Connection: Hose 6/4 with Cap nut

Filter pore size: 50 µm

VFI CN8/6 50

Part no.10.07.01.00245

Vacuum filter with replaceable filter cartridge

Connection: Hose 8/6 with Cap nut

Filter pore size: 50 µm

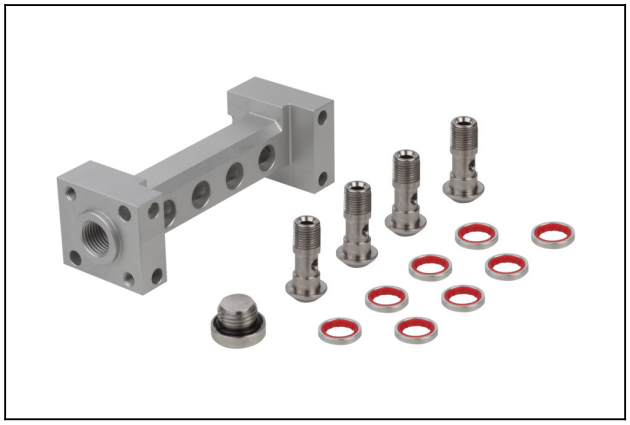

GP 4 SCPS 07..15 G2

Part no.10.02.02.04338

Compressed air distributor for use as a manifold and for building ejector blocks

Number of connections: 4

Length L: 108 mm

Width B: 38 mm

Height H: 34 mm

for: Ejector SCPS 07..15 G2

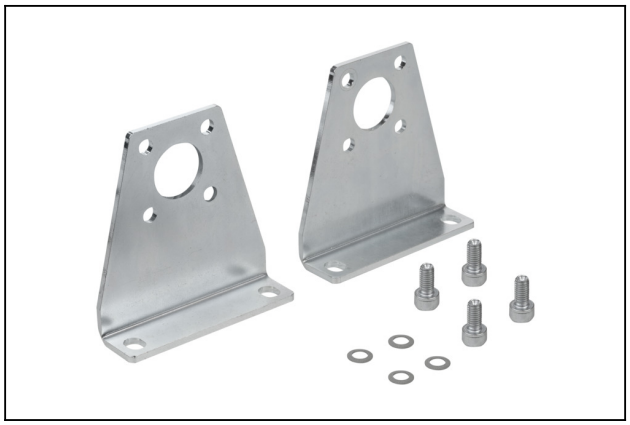

SET SCPS
Part no.10.02.02.04343
Mounting set
for: Compact ejectors SCPS

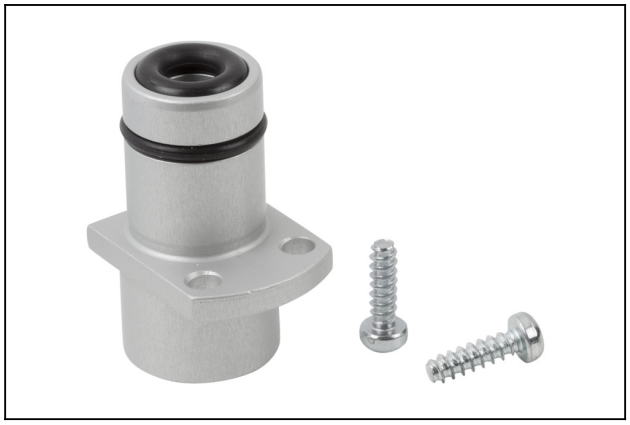

ABL-SET SCPS einstufig
Part no.10.02.02.04216
Exhaust air set
for: Compact ejectors SCPS
Size: einstufig

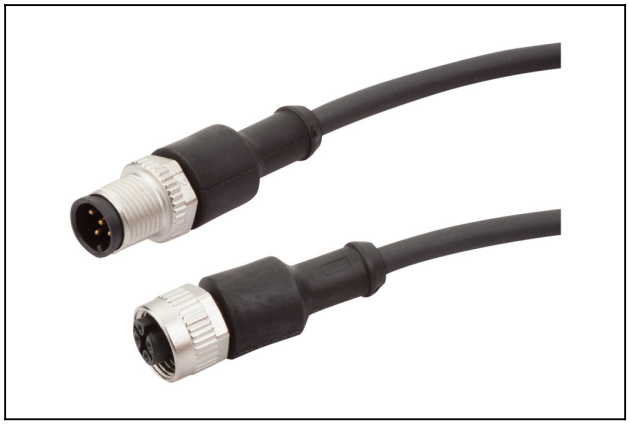

ASK B-M12-5 1000 S-M12-5
Part no.21.04.05.00158
Connection cable
Interface Connection 1:
Fem connect M12, 5 pol
Cable length: 1000 mm
Interface Connection 2:
Male connect M12, 5 pol
Material: PUR-Cable

Compact ejector

SCPSi 07 G02 NO M12-5

Part no.:10.02.02.04120

https://www.schmalz.com/10.02.02.04120

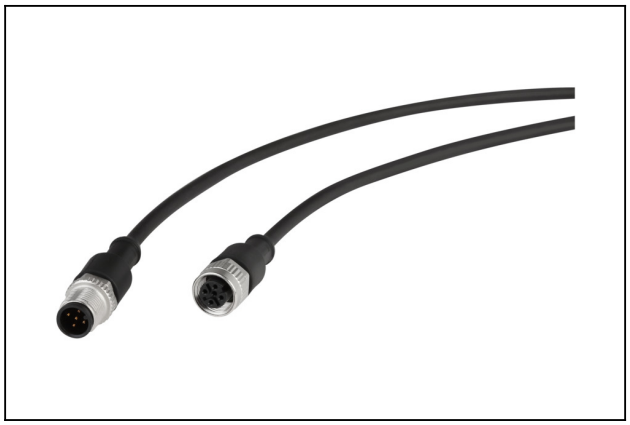

ASK B-M12-5 2000 S-M12-5

Part no.21.04.05.00211

Connection cable

Interface Connection 1:

Fem connect M12, 5 pol

Cable length: 2000 mm

Interface Connection 2:

Male connect M12, 5 pol

Material: PUR-Cable

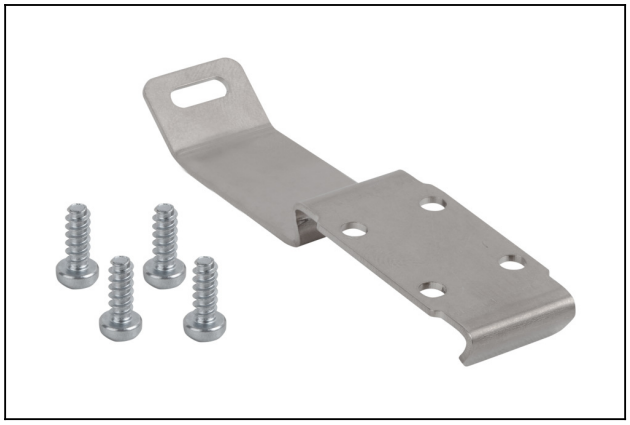

HUT-SN-KL 70x18x8

Part no.10.02.02.04149

Top-hat rail clamp comp.

Length L: 70 mm

Width B: 18 mm

Height H: 8 mm

Section type: EN 50022

VFI 6/4 50

Part no.10.07.01.00328

Vacuum filter with replaceable filter cartridge

Connection: Hose 6/4

Filter pore size: 50 µm