Honeywell

MICRO SWITCH™
Commercial-Grade Toggle Switches
NT Series

Datasheet

sales@prom-elec.com / ООО ПРОМЭЛЕКТРОНИКА

MICRO SWITCH™ NT Series Commercial-Grade Toggle Switches

Honeywell MICRO SWITCH™ NT Series toggle switches meet the need for a rugged, cost-effective toggle switch. Quality construction features include a seal between the toggle lever and bushing, and between the cover and case. These switches are suitable for applications in many demanding outdoor environments, where the panels are subjected to vibration from equipment, temperature extremes, dust, splashing water, and/or hose directed water.

They are capable of withstanding exposure to heavy accumulations of early morning dew that may condense on the control panel in cabs of vehicles left outdoors overnight. The NT toggle switches with larger standard metal or plastic levers are well suited for gloved-hand operation.

Available in both step-base and flat-base styles, the NT Series offers three popular styles of termination: 6-32 screws, solder lugs with 3,0 mm [0.12 in] diameter hole, or 6,35 mm [0.25 in] quick connect terminals.

The optional "Easy Start" threaded bushing enables quick alignment of the mounting nut to minimize any cross threading. The panel stand-off with O-ring feature available on some listings eliminates the need for behind-the-panel hardware, provides a uniform panel height, and a panel-to-cover seal.

What makes our switches better?

- NEMA 3, 3R, 4, 13 and IP67/68 environmental sealing for demanding applications
- UL recognized, CSA certified, and CE certified for global use
- 1-, 2-, and 4-pole options to meet a variety of circuitry requirements
- 2- or 3-position maintained and momentary action to meet circuit and actuator requirements
- Optional step-case design provides added space between terminals to prevent shorting

Tough environmental sealing makes harsh environments seem like just another sunny day.

ENVIRONMENTAL SEALING • GLOBAL APPROVALS
MULTI-CIRCUITS • HIGH PERFORMANCE

Features and Benefits

SEALED TO NEMA 3, 3R, 4, 13 AND IP67/IP68 FOR GLOBAL USE

MICRO SWITCH™ NT toggle switches feature a moveable seal between the toggle lever and bushing and a completely sealed case to meet **NEMA and IP seal ratings**. They are suitable for applications in many **demanding outdoor environments,** where the panels are subjected to vibration from equipment, temperature extremes, dust, splashing water, and/or hose directed water. UL recognized, File E12252, Vol. 1, Section 44, CSA certified, and CE certified for global use

Excellent tactile feedback

WELL-SUITED FOR GLOVED-HAND OPERATION

Spring-loaded actuating mechanism provides excellent tactile feedback for the toggle switch lever. The NT toggle switches with larger standard metal or plastic levers are well suited for gloved-hand operation

Locking levers reduce unintended actuation

LOCKING LEVERS

Optional **lever locks** (pull-to-unlock) require two separate actions to actuate the switch in order to prevent unintended actuation

MINIMIZES INSTALLATION TIME

Optional flat base case design with a quick connect terminal pattern mates to a commercial-type connector for **plug-and-play connectivity**, reducing installation time

VARIETY OF CIRCUITRIES AND OPERATING ACTIONS

NT Series' **2- and 3-position, maintained and momentary** toggle action, for a breadth of circuitry and actuator requirements. Delivers high performance in a wide range of temperatures: -40 °C to 71 °C [-40 °F to 160 °F]

EASILY CONTROLS LOW-VOLTAGE DC APPLICATIONS

Toggle switches available with a choice of **silver alloy or gold-plated contacts** to handle a variety of electrical load requirements

INNOVATIVE PRODUCT DESIGN

Optional engineered step-design case provides added space between terminals to **prevent shorting.** Optional panel stand-off with O-ring panel seal **eliminates behind-the-panel hardware**

Potential Applications

AERIAL PLATFORM LIFTS

Momentary toggles are used to operate the movement of aerial platform lifts. Toggle can be used to raise & lower, extend & retract and rotate platform or outriggers.

PLATFORM LIFTS FOR TRUCKS

Used to fold/unfold and raise/lower from a lift gate's control panel.

INDUSTRIAL EQUIPMENT

Used in the control panel of overhead cranes and factory floor equipment.

RAILROAD LOCOMOTIVES AND MAINTENANCE EQUPMENT

Designed into control panels often found in locomotives, rail grinders, tie removal, ballast spreaders, and tampers.

CONSTRUCTION EQUIPMENT

Used to operate movement of machinery and/or turn on lights, pumps, etc. in road milling, road pavers, trenchers, stump cutting and other construction and mining equipment. Also widely used for remote control of concrete pumping and drilling machines.

AGRICULTURAL MACHINERY

Used in control panels for harvesting equipment, grain handlers, and grain dryers.

MICRO SWITCH™ Commercial-Grade Toggle Switches

Table 1. Specifications

Characteristic	Parameter
Description	Commercial-grade toggle switch (step base and flat base options)
Sealing	IP67/IP68; NEMA 3, 3R, 4, and 13
Operating temperature	-40 °C to 71 °C [-40 °F to 160 °F]
Actuators	Standard, locking, special design, tab
Action	2- or 3- position; momentary and maintained
Mounting	Bushing 15/32 in (0.47 in) Ø
Circuitry	SPST, SPDT, DPST, DPDT, 4PST, 4PDT
Terminations	Screw, solder, quick connect
Contacts	Silver alloy, gold plated
Amp rating	Up to 20 A (resistive)
Approvals	UL, CSA, CE
Measurement	26,7 mm H x 33,5 mm W x 22,6 mm D [1.05 in H x 1.32 in W x 0.89 in D]

Table 2. UL and CSA Electrical Ratings

Rating code	Electrical rating
L192	10 amps, 125, 250, 277 Vac; ¼ Hp, 125 Vac; ½ Hp, 250, 277 Vac; 3 amps, 125 Vac "L"
L191	15 amps, 125, 250, 277 Vac; ½ Hp, 125 Vac; 1 Hp, 250, 277 Vac; 5 amps, 125 Vac "L"

Table 3. Electrical Ratings (in amperes)

Electrical rating code	28 Vdc			115 Vdc	250 Vdc	115 Vac, 60 Hz & 400 Hz Max.			230 Vac
	Ind.	Res.	Lamp	Res.	Res.	Ind.	Res.	Lamp	Res.
1	12	20	5	0.75	0.5	10	15	3	6
2	10	15	4	0.75	0.5	7	15	2	6
3	15	20	7	0.75	0.5	15	15	4	6
4	10	18	5	0.75	0.5	8	11	2	6
5	12	20	5	0.75	0.5	15	15	4	6
6	10	18	4	0.75	0.5	8	11	2	6

TERMINAL CIRCUIT IDENTIFICATION

Terminal identifications are referred to in the order guides to indicate which circuits are made in each toggle position (i.e., 1-2 refers to circuit closure through terminals 1 and 2).

NOTE: Keyside is on #3 terminal side.

Step Base - One Pole

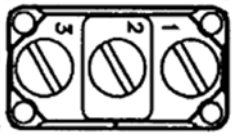

Step Base - Two Pole

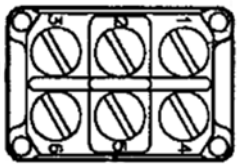

Step Base - Four Pole

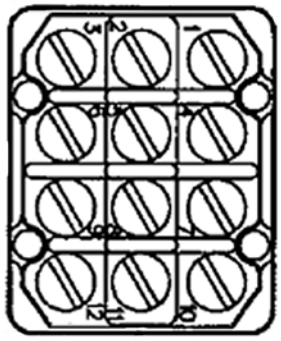

Flat Base - One Pole

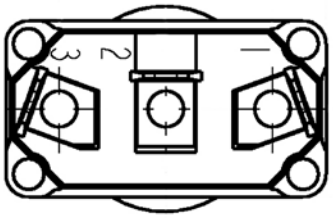

Flat Base - Two Pole

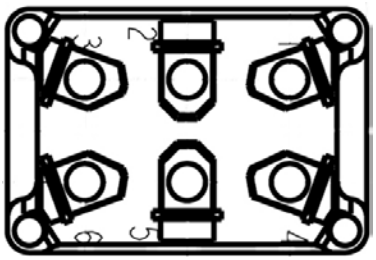

SPECIAL CIRCUITRIES

Catalog listings with -10, -50, and -70 suffix numbers, as shown in the order guides, have special "on-on-on" circuits, as illustrated below. NTs with -12 suffix are the same as -50 except the keyway position is maintained, and the center position circuits 2-3 and 4-5 are made.

-10 CIRCUITRY

No of poles	Keyway Side Maint. Position	Center Maint. Position	Opposite Keyway Maint. Position
2			
4	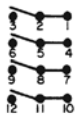		

-50 CIRCUITRY

No of poles	Keyway Side Maint. Position	Center Maint. Position	Opposite Keyway Maint. Position
2			
4	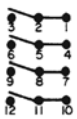	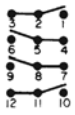	

-70 CIRCUITRY

No of poles	Keyway Side Maint. Position	Center Maint. Position	Opposite Keyway Maint. Position
2			
4	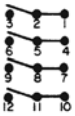	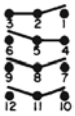	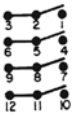

MICRO SWITCH™ Commercial-Grade Toggle Switches

NT (STEP BASE) 2-POSITION ORDER GUIDE

	Circuits Made with Toggle At:				Catalog Listing (Standard Lever)			Pull-To-Unlock Lever (Add suffix to Standard Lever Listing)**
No. of poles	Keyway Position	Opposite Keyway	UL Rating Code	Elect. Rating Code	Screw	Solder	Quick Connect	
1	OFF	2-3	L191	1	1NT1-2	11NT1-2	1NT91-2	D, F, G
	1-2	2-3	L191	1	1NT1-3	11NT1-3	1NT91-3	D, F, G
	OFF*	2-3	L192	2	1NT1-4	11NT1-4	1NT91-4	F
	1-2*	OFF	L192	2	1NT1-6	11NT1-6	1NT91-6	F
	1-2*	2-3	L192	2	1NT1-8	11NT1-8	1NT91-8	F
2	OFF	2-3, 5-6	L191	3	2NT1-2	12NT1-2	2NT91-2	D, F, G
	1-2, 4-5	2-3, 5-6	L191	3	2NT1-3	12NT1-3	2NT91-3	F
	OFF*	2-3, 5-6	L192	4	2NT1-4	12NT1-4	2NT91-4	F
	1-2, 4-5*	OFF	L192	4	2NT1-6	12NT1-6	2NT91-6	D, F, G
	1-2, 4-5*	2-3, 5-6	L192	4	2NT1-8	12NT1-8	2NT91-8	F
4	OFF	2-3, 5-6, 8-9, 11-12	L191	5	4NT1-2	14NT1-2	4NT91-2	D, F, G
	1-2, 4-5, 7-8, 10-11	2-3, 5-6, 8-9, 11-12	L191	5	4NT1-3	14NT1-3	4NT91-3	F
	OFF*	2-3, 5-6, 8-9, 11-12	L192	6	4NT1-4	14NT1-4	4NT91-4	F
	1-2, 4-5, 7-8, 10-11*	OFF	L192	6	4NT1-6	14NT1-6	4NT91-6	D, F, G
	1-2, 4-5, 7-8, 10-11*	2-3, 5-6, 8-9, 11-12	L192	6	4NT1-8	14NT1-8	4NT91-8	F

* These positions are momentary. All others are maintained.
** See page 17 for locking configurations.

NT (STEP BASE) 2-POSITION ORDER GUIDE • PANEL STAND-OFF FEATURE

	Circuits Made with Toggle At:				Catalog Listing (Standard Lever)
No. of poles	Keyway Position	Opposite Keyway	UL Rating Code	Elect. Rating Code	Screw Terminals
1	OFF	2-3	L191	1	61NT1-2
	1-2	2-3	L191	1	61NT1-3
	1-2*	OFF	L192	2	61NT1-6
	1-2*	2-3	L192	2	61NT1-8
2	OFF	2-3, 5-6	L191	3	62NT1-2
	1-2, 4-5	2-3, 5-6	L191	3	62NT1-3
	1-2, 4-5*	OFF	L192	4	62NT1-6
	1-2, 4-5*	2-3, 5-6	L192	4	62NT1-8

*These positions are momentary. All others are maintained.

NT (STEP BASE) 3-POSITION ORDER GUIDE • PANEL STAND-OFF FEATURE

	Circuits Made with Toggle At:					Catalog Listing (Standard Lever)
No. of poles	Keyway Position	Center Position	Opposite Keyway	UL Rating Code	Elect. Rating Code	Screw Terminals
1	1-2	OFF	2-3	L191	1	61NT1-1
	1-2*	OFF	2-3*	L192	2	61NT1-7
2	1-2, 4-5	OFF	2-3, 5-6	L191	3	62NT1-1
	1-2, 4-5*	OFF	2-3, 5-6*	L192	4	62NT1-7

*These positions are momentary. All others are maintained.

NT (STEP BASE) 3-POSITION ORDER GUIDE

	Circuits Made with Toggle At:					Catalog Listing (Standard Lever)			Pull-To-Unlock Lever (Add suffix to Standard Lever Listing)***
No. of poles	Keyway Position	Center Position	Opposite Keyway	UL Rating Code	Elect. Rating Code	Screw	Solder	Quick Connect	
1	1-2	OFF	2-3	L191	1	1NT1-1	11NT1-1	1NT91-1	ALL TYPES
	1-2*	OFF	2-3	L192	2	1NT1-5	11NT1-5	1NT91-5	E, F, K, L, M, N
	1-2*	OFF	2-3*	L192	2	1NT1-7	11NT1-7	1NT91-7	E, L, N
	NONE**	OFF	2-3	L191	1	1NT1-21	11NT1-21	1NT91-21	E, F, K, M
	NONE**	1-2	2-3	L191	1	1NT1-31	11NT1-31	1NT91-31	E, F, K, M
	NONE**	1-2	2-3*	L192	2	1NT1-51	11NT1-51	1NT91-51	E
	1-2*	OFF	NONE**	L192	2	1NT1-61	11NT1-61	1NT91-61	E
2	1-2, 4-5	OFF	2-3, 5-6	L191	3	2NT1-1	12NT1-1	2NT91-1	ALL TYPES
	1-2, 4-5*	OFF	2-3, 5-6	L192	4	2NT1-5	12NT1-5	2NT91-5	E, F, K, L, M, N
	1-2, 4-5*	OFF	2-3, 5-6*	L192	4	2NT1-7	12NT1-7	2NT91-7	E, L, N
	NONE*	OFF	2-3, 5-6	L191	3	2NT1-21	12NT1-21	2NT91-21	E, F, K, M
	NONE**	1-2, 4-5	2-3, 5-6	L191	3	2NT1-31	12NT1-31	2NT91-31	E, F, K, M
	NONE**	1-2, 4-5	2-3, 5-6*	L192	4	2NT1-51	12NT1-51	2NT91-51	E
	1-2, 4-5*	OFF	NONE**	L192	4	2NT1-61	12NT1-61	2NT91-61	E
	1-2, 4-5	2-3, 4-5	2-3, 5-6	L191	3	2NT1-12	12NT1-12	2NT91-12	ALL TYPES
	1-2, 4-5	1-2, 5-6	2-3, 5-6	L191	3	2NT1-10	12NT1-10	2NT91-10	ALL TYPES
	1-2, 4-5*	1-2, 5-6	2-3, 5-6	L192	4	2NT1-50	12NT1-50	2NT91-50	E, F, K, L, M, N
	1-2, 4-5*	1-2, 5-6	2-3, 5-6*	L192	4	2NT1-70	12NT1-70	2NT91-70	E, L, N
4	1-2, 4-5, 7-8, 10-11	OFF	2-3, 5-6, 8-9, 11-12	L191	5	4NT1-1	14NT1-1	4NT91-1	ALL TYPES
	1-2, 4-5, 7-8, 10-11*	OFF	2-3, 5-6, 8-9, 11-12	L192	6	4NT1-5	14NT1-5	4NT91-5	E, F, K, L, M, N
	1-2, 4-5, 7-8, 10-11*	OFF	2-3, 5-6, 8-9, 11-12*	L192	6	4NT1-7	14NT1-7	4NT91-7	E, L, N
	NONE*	OFF	2-3, 5-6, 8-9, 11-12	L191	5	4NT1-21	14NT1-21	4NT91-21	E, F, K, M
	NONE**	1-2, 4-5, 7-8, 10-11	2-3, 5-6, 8-9, 11-12	L191	5	4NT1-31	14NT1-31	4NT91-31	E, F, K, M
	NONE**	1-2, 4-5, 7-8, 10-11	2-3, 5-6, 8-9, 11-12*	L192	6	4NT1-51	14NT1-51	4NT91-51	E
	1-2, 4-5, 7-8, 10-11*	OFF	NONE**	L192	6	4NT1-61	14NT1-61	4NT91-61	E
	1-2, 4-5, 7-8, 10-11	2-3, 4-5, 7-8, 11-12	2-3, 5-6, 8-9, 11-12	L191	5	4NT1-12	14NT1-12	4NT91-12	ALL TYPES
	1-2, 4-5, 7-8, 10-11	2-3, 4-5	2-3, 5-6, 8-9, 11-12	L191	5	4NT1-10	14NT1-10	4NT91-10	ALL TYPES
	1-2, 4-5, 7-8, 10-11*	2-3, 4-5, 7-8, 11-12	2-3, 5-6, 8-9, 11-12	L192	6	4NT1-50	14NT1-50	4NT91-50	E, F, K, L, M, N
	1-2, 4-5, 7-8, 10-11*	2-3, 4-5	2-3, 5-6, 8-9, 11-12*	L192	6	4NT1-70	14NT1-70	4NT91-70	E, L, N
	1-2, 4-5, 7-8, 10-11*	2-3, 4-5, 7-8, 11-12	2-3, 5-6, 8-9, 11-12*	L192	6	4NT1-72	–	–	E, L, N

* These positions are momentary. All others are maintained.
** Toggle lever is blocked from these products. Toggle becomes 2-position, with center being one extreme position.
*** See page 17 for locking configurations.

MICRO SWITCH™ Commercial-Grade Toggle Switches

NT (FLAT BASE) 2-POSITION ORDER GUIDE

	Circuits Made with Toggle At:				Catalog Listing
No. of poles	Keyway Position	Opposite Keyway	UL Rating Code	Elect. Rating Code	Quick Connect
1	OFF	2-3	L191	1	31NT91-2
	1-2	2-3	L191	1	31NT91-3
	OFF**	2-3	L192	2	31NT91-4
	1-2**	OFF	L192	2	31NT91-6
	1-2**	2-3	L192	2	31NT91-8
2	OFF	2-3, 5-6	L191	3	32NT91-2
	1-2, 4-5	2-3, 5-6	L191	3	32NT91-3
	OFF**	2-3, 5-6	L192	4	32NT91-4
	1-2, 4-5**	OFF	L192	4	32NT91-6
	1-2, 4-5**	2-3, 5-6	L192	4	32NT91-8

** These positions are momentary. All others are maintained.

NT (FLAT BASE) 2-POSITION ORDER GUIDE • PANEL STAND-OFF FEATURE

	Circuits Made with Toggle At:				Catalog Listing (Standard Lever)
No. of poles	Keyway Position	Opposite Keyway	UL Rating Code	Elect. Rating Code	Quick Connect
1	OFF	2-3	L191	1	631NT91-2
	1-2**	2-3	L191	1	631NT91-3
	OFF	2-3	L192	2	631NT91-4
	1-2**	OFF	L192	2	631NT91-6
	1-2**	2-3	L192	2	631NT91-8
2	OFF	2-3, 5-6	L191	3	632NT91-2
	1-2, 4-5	2-3, 5-6	L191	3	632NT91-3
	OFF**	2-3, 5-6	L192	4	632NT91-4
	1-2, 4-5**	OFF	L192	4	632NT91-6
	1-2, 4-5**	2-3, 5-6	L192	4	632NT91-8

**These positions are momentary. All others are maintained

MATING CONNECTORS ORDER GUIDE

Catalog listing	Description
19PA168-NT	2-pole connector
19PA169-NT	1-pole connector, same package size as 2-pole connector

NT Series

NT (FLAT BASE) 3-POSITION ORDER GUIDE

	Circuits Made with Toggle At:					Catalog Listing (Standard Lever)
No. of poles	Keyway Position	Center Position	Opposite Keyway	UL Rating Code	Elect. Rating Code	Quick Connect
1	1-2	OFF	2-3	L191	1	31NT91-1
	1-2**	OFF	2-3	L192	2	31NT91-5
	1-2**	OFF	2-3**	L192	2	31NT91-7
	NONE***	OFF	2-3	L191	1	31NT91-21
	NONE***	1-2	2-3	L191	1	31NT91-31
	NONE***	1-2	2-3**	L192	2	31NT91-51
	1-2**	OFF	NONE***	L192	2	31NT91-61
2	1-2, 4-5	OFF	2-3, 5-6	L191	3	32NT91-1
	1-2, 4-5**	OFF	2-3, 5-6	L192	4	32NT91-5
	1-2, 4-5**	OFF	2-3, 5-6**	L192	4	32NT91-7
	NONE***	OFF	2-3, 5-6	L191	3	32NT91-21
	NONE***	1-2, 4-5	2-3, 5-6	L191	3	32NT91-31
	NONE***	1-2, 4-5	2-3, 5-6**	L192	4	32NT91-51
	1-2, 4-5**	OFF	NONE***	L192	4	32NT91-61
	1-2, 4-5	2-3, 5-6	2-3, 5-6	L191	3	32NT91-12
	1-2, 4-5	1-2, 5-6	2-3, 5-6	L191	3	32NT91-10
	1-2, 4-5**	1-2, 5-6	2-3, 5-6	L192	4	32NT91-50
	1-2, 4-5**	1-2, 5-6	2-3, 5-6**	L192	4	32NT91-70

** These positions are momentary. All others are maintained.
*** Toggle lever is blocked from these positions. Toggle becomes 2-position, with center being one extreme position.

NT (FLAT BASE) 3-POSITION ORDER GUIDE • PANEL STAND-OFF FEATURE

	Circuits Made with Toggle At:					Catalog Listing (Standard Lever)
No. of poles	Keyway Position	Center Position	Opposite Keyway	UL Rating Code	Elect. Rating Code	Quick Connect
1	1-2**	OFF	2-3**	L192	2	631NT91-7
	1-2	OFF	2-3	L191	1	631NT91-1
	1-2**	OFF	2-3	L191	2	631NT91-5
2	1-2, 4-5	OFF	2-3, 5-6	L191	3	632NT91-1
	1-2, 4-5**	OFF	2-3, 5-6	L192	4	632NT91-5
	1-2, 4-5**	OFF	2-3, 5-6**	L192	4	632NT91-7
	1-2, 4-5**	1-2, 5-6	2-3, 5-6**	L192	4	632NT91-70

** These positions are momentary. All others are maintained

STEP BASE • STANDARD ACTUATOR OPTIONS, TERMINALS, & DIMENSIONS

Note: Three-position switches shown

1NT1: Single pole, standard lever, screw terminals

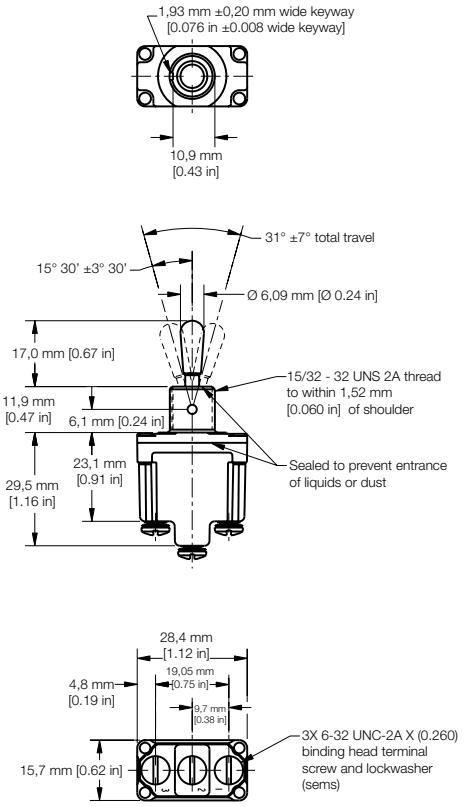

1NT91: Single pole, standard lever, quick-connect terminals

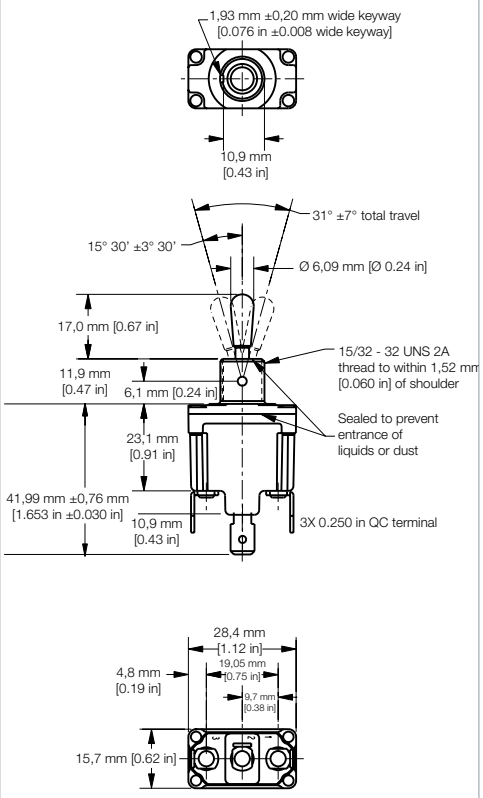

11NT1: Single pole, standard lever, solder terminals

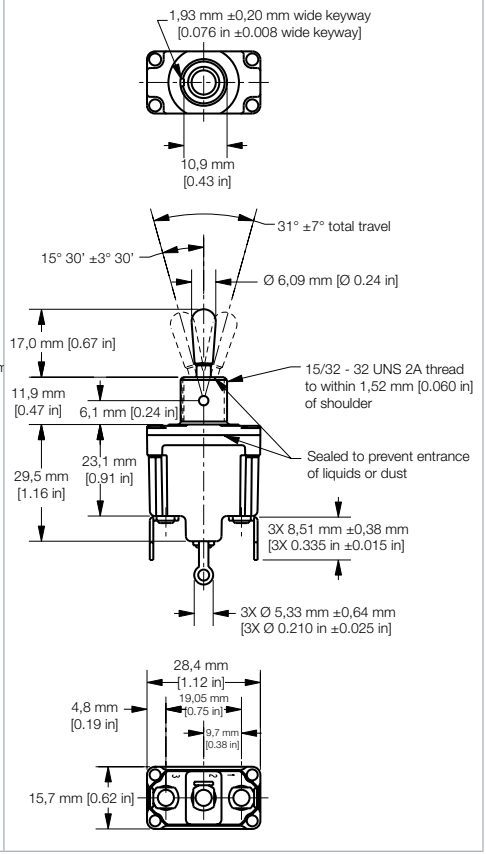

Locking lever dimensions for single pole NT toggles

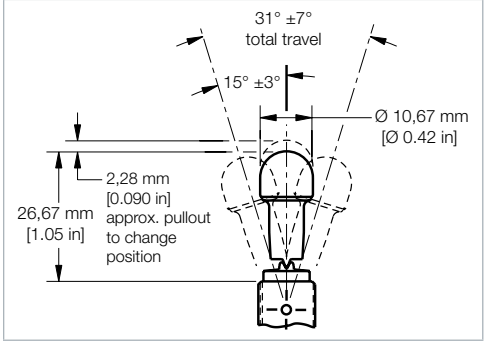

STEP BASE • STANDARD ACTUATOR OPTIONS, TERMINALS, & DIMENSIONS

Note: Three-position switches shown

2NT1: Double pole, standard lever, screw terminals

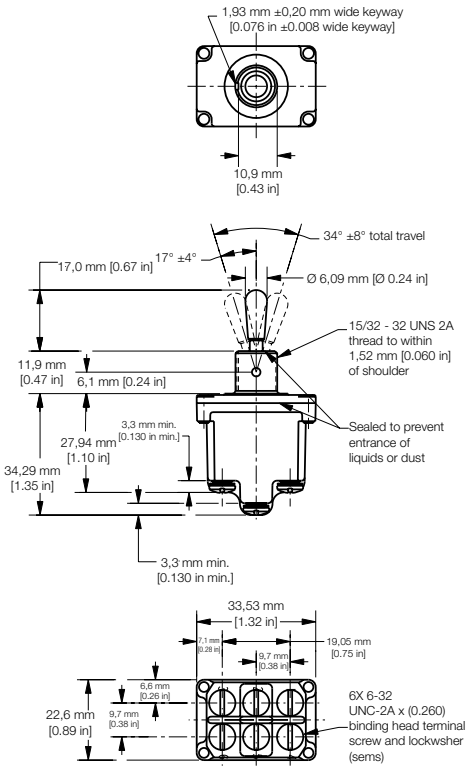

2NT91: Double pole, standard lever, quick-connect terminals

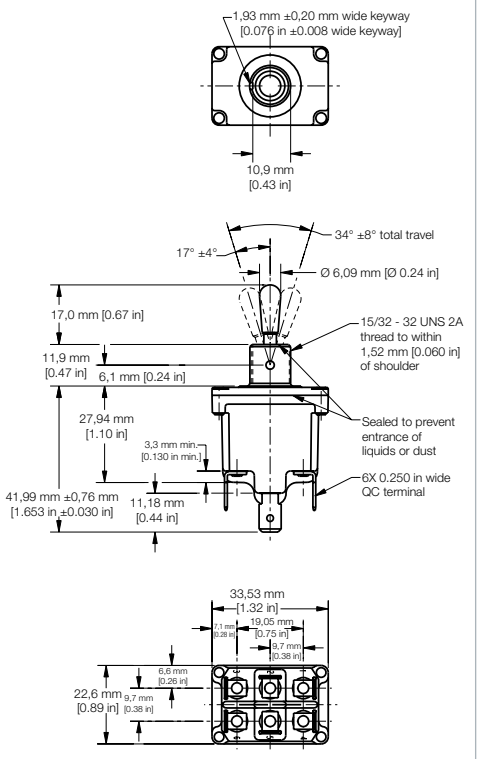

12NT1: Double pole, standard lever, solder terminals

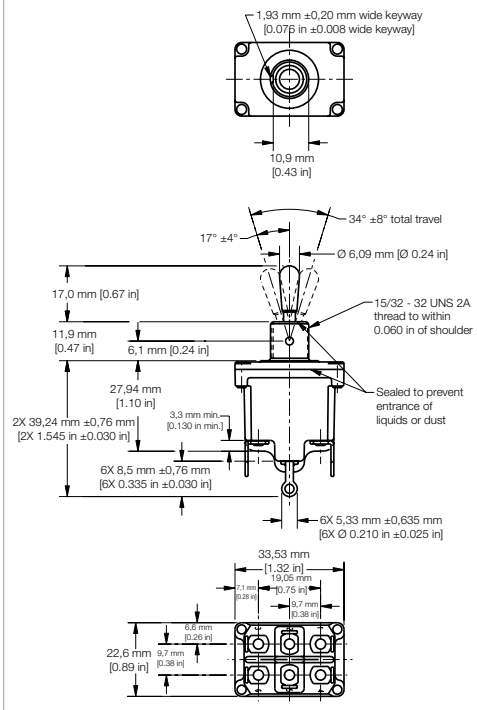

Locking lever dimensions for double pole NT toggles

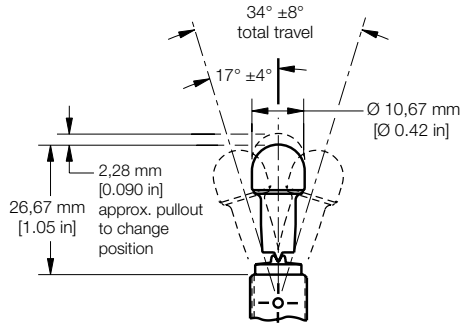

MICRO SWITCH™ Commercial-Grade Toggle Switches

STEP BASE • STANDARD ACTUATOR OPTIONS, TERMINALS, & DIMENSIONS

Note: Three-position switches shown

4NT1: Four-pole, standard lever, screw terminals

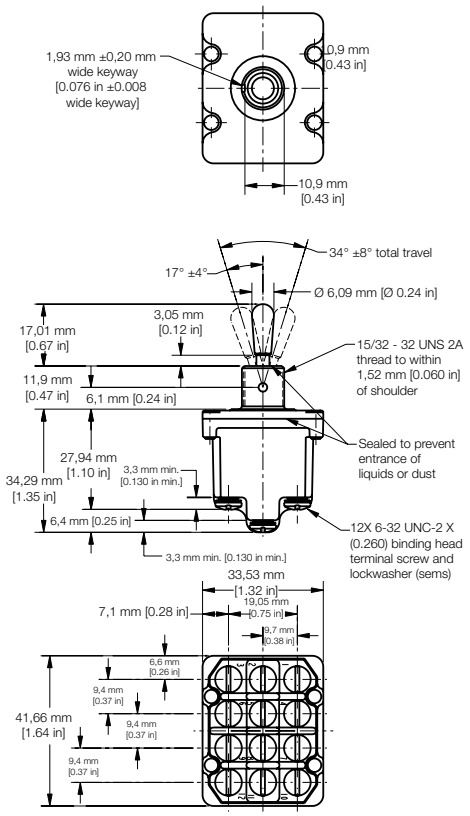

4NT91: Four-pole, standard lever, quick-connect terminals

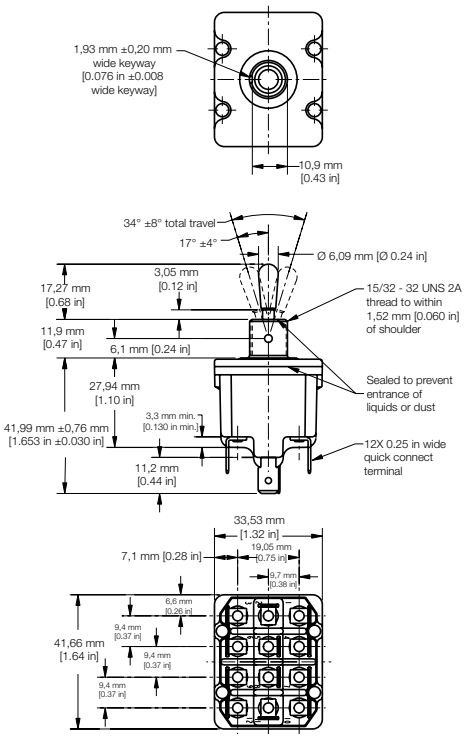

14NT1: Four-pole, standard lever, solder terminals

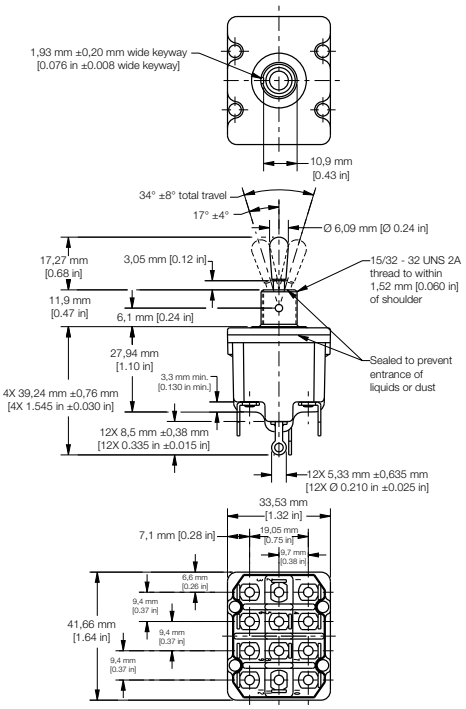

Locking lever dimensions for four-pole NT toggles

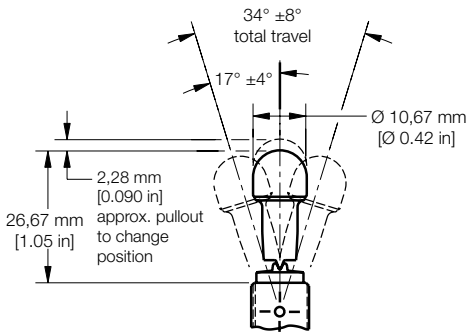

STEP BASE • STANDARD ACTUATOR OPTIONS, TERMINALS, & DIMENSIONS

Note: Three-position switches shown

61NT1: Single pole, standard lever, panel standoff, screw terminals	62NT1: Double pole, standard lever, panel standoff, screw terminals
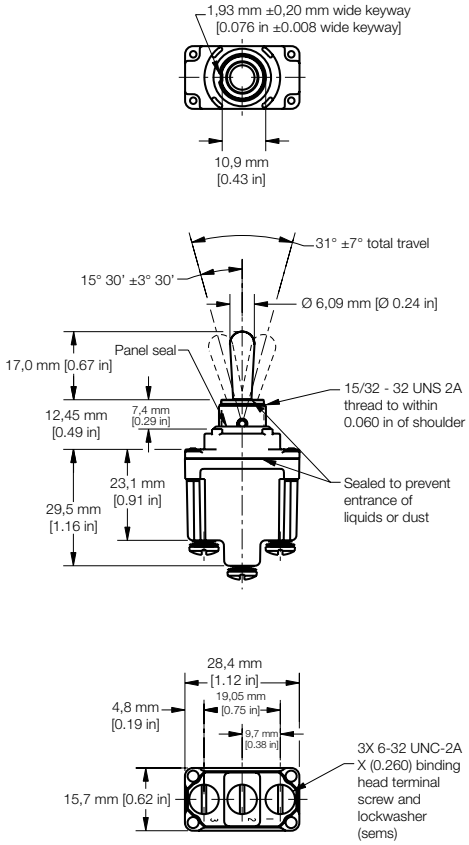	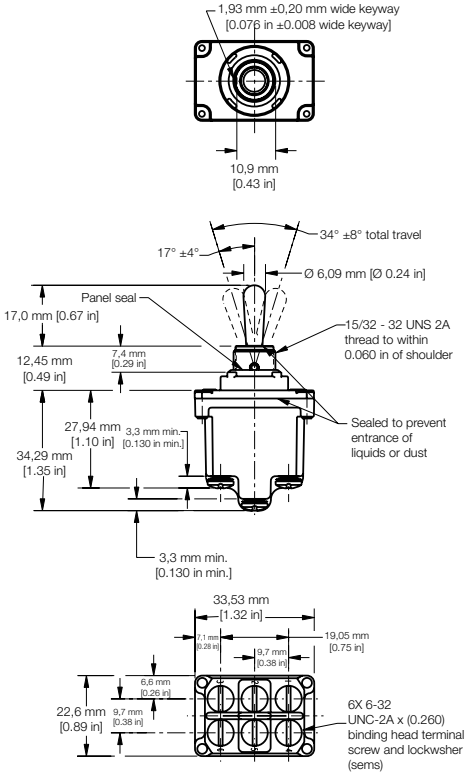

MICRO SWITCH™ Commercial-Grade Toggle Switches

FLAT BASE • STANDARD ACTUATOR OPTIONS, TERMINALS, & DIMENSIONS

Note: Three-position switches shown

31NT91: Single pole, standard lever, quick-connect terminals

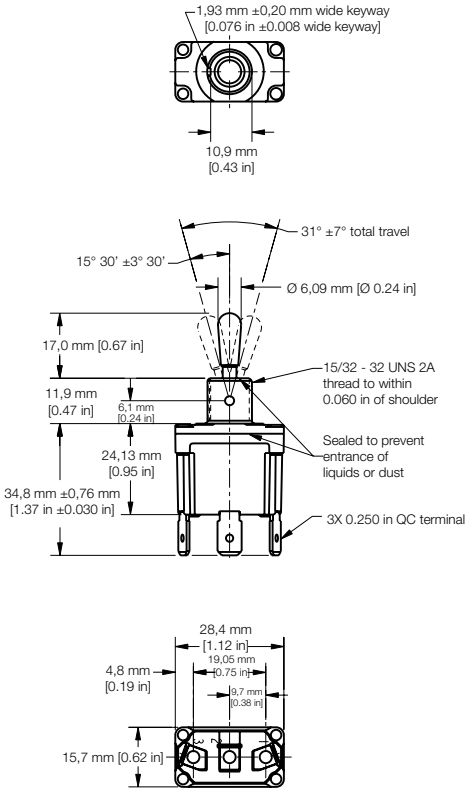

631NT91: Single pole, standard lever, panel standoff, quick-connect terminals

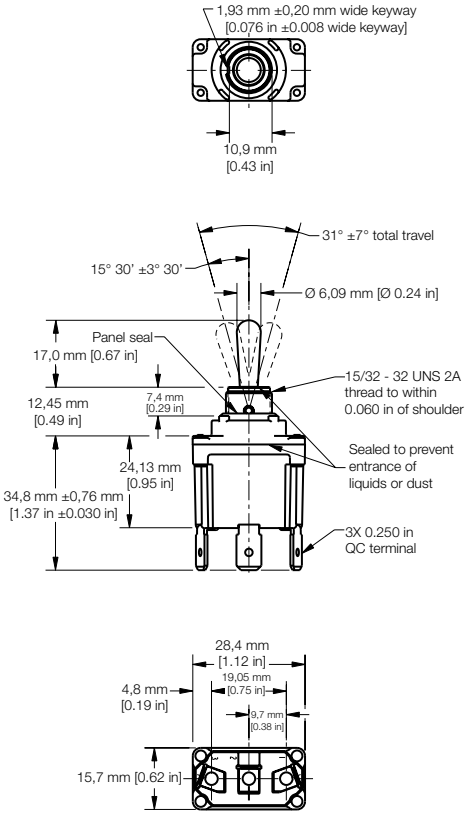

32NT91: Double pole, standard lever, quick-connect terminals

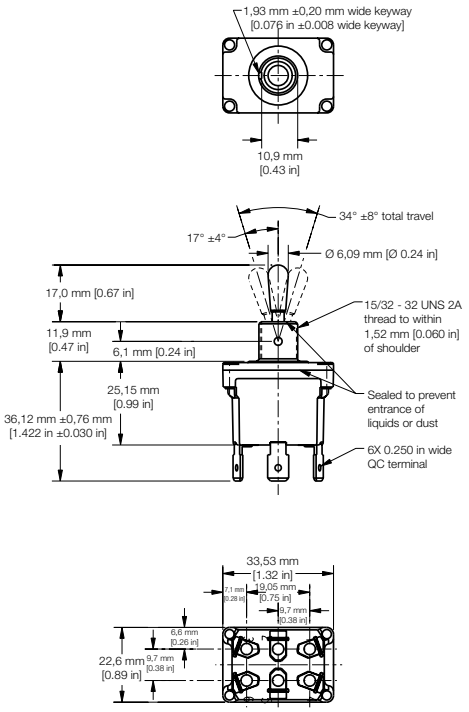

632NT91: standard lever, panel standoff, quick-connect terminals

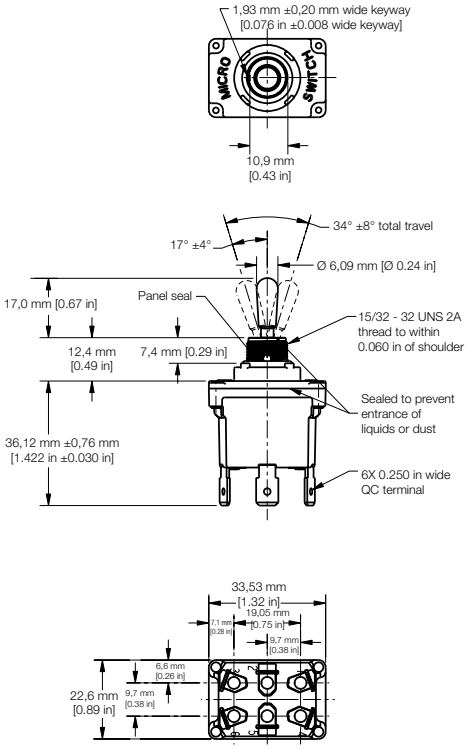

MICRO SWITCH™ NT SERIES LOCKING CONFIGURATIONS

A	B	D	E	F	G	H
Locked In Three Positions	Locked In Center and Extreme Position (Keyway Side)	Locked Out Of Center Position	Locked In Center Position	Locked In Extreme Position (Opposite Keyway)	Locked In Extreme Position (Keyway Side)	Locked Out Of Center And Extreme Position (Keyway Side)

J	K	L	M	N	P
Locked Out Of Center And Extreme Position (Opposite Keyway)	Locked In Center And Extreme Position (Opposite Keyway)	Locked Out Of Extreme Position (Keyway Side)	Locked Out Of And Into Extreme Position (Opposite Keyway)	Locked Out Of Extreme Position (Opposite Keyway)	Locked Out Of And Into Extreme Position (Keyway Side)

PULL-TO-UNLOCK LEVERS

Pull-to-unlock toggle levers prevent accidental toggle movement. The knobbed toggle lever must be pulled out approximately 2,3 mm [0.09 in] to change positions. Thirteen different locking configurations are available. This lever style also has a non-glare matte nickel finish. See table below for specific locking configurations.

MICRO SWITCH™ NT SERIES PANEL CUTOUT

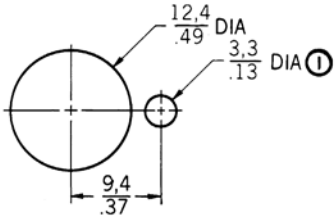

With locking ring

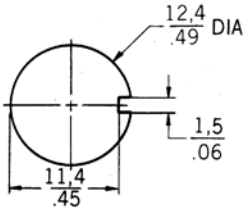

Without locking ring

Note:
① 1,4/.06 MIN DEEP TO ACCOMMODATE LOCKING RING. 15PA87 PANEL SEAL REQUIRES BLIND HOLE TO INSURE SEAL INTEGRITY

ADDITIONAL INFORMATION

The following associated literature is available at sensing.honeywell.com:

- Product range guide
- Product application-specific information
  - Sensors and switches in front loaders
  - Sensors and switches in mobile cranes
  - Sensors and switches in oil rig applications

Find out more

Honeywell serves its customers through a worldwide network of sales offices, representatives and distributors. For application assistance, current specifications, pricing or name of the nearest Authorized Distributor, contact your local sales office.

To learn more about Honeywell's sensing and control products, call **+1-815-235-6847 or 1-800-537-6945**, visit **sensing.honeywell.com,** or e-mail inquiries to **info.sc@honeywell.com**

⚠ WARNING
PERSONAL INJURY

DO NOT USE these products as safety or emergency stop devices or in any other application where failure of the product could result in personal injury.

Failure to comply with these instructions could result in death or serious injury.

⚠ WARNING
MISUSE OF DOCUMENTATION

- The information presented in this product sheet is for reference only. Do not use this document as a product installation guide.
- Complete installation, operation, and maintenance information is provided in the instructions supplied with each product.

Failure to comply with these instructions could result in death or serious injury.

WARRANTY/REMEDY

Honeywell warrants goods of its manufacture as being free of defective materials and faulty workmanship. Honeywell's standard product warranty applies unless agreed to otherwise by Honeywell in writing; please refer to your order acknowledgement or consult your local sales office for specific warranty details. If warranted goods are returned to Honeywell during the period of coverage, Honeywell will repair or replace, at its option, without charge those items it finds defective. **The foregoing is buyer's sole remedy and is in lieu of all other warranties, expressed or implied, including those of merchantability and fitness for a particular purpose. In no event shall Honeywell be liable for consequential, special, or indirect damages.**

While we provide application assistance personally, through our literature and the Honeywell website, it is up to the customer to determine the suitability of the product in the application.

Specifications may change without notice. The information we supply is believed to be accurate and reliable as of this printing. However, we assume no responsibility for its use.

Honeywell Sensing and Productivity Solutions
9680 Old Bailes Road
Fort Mill, SC 29707
honeywell.com

Honeywell

005429-5-EN IL50 GLO
May 2016
Copyright © 2016 Honeywell International Inc. All rights reserved.