JBC

www.jbctools.com

INSTRUCTION MANUAL

DDE

2-Tool Control Unit

sales@prom-elec.com / ООО ПРОМЭЛЕКТРОНИКА

This manual corresponds to the following reference:

DDE-9C (100V)
DDE-1C (120 V)
DDE-2C (230 V)

Packing List

The following items are included:

2-Tool
Control Unit ..... 1 unit

Power Cord ..... 1 unit
Ref. 0024077 (100V)
0023717 (120V)
0024080 (230V)

Manual .....1 unit
Ref. 0029145

Features

DDE work simultaneously with **up to 2** tools and 1 module + 1 pedal for each tool (peripheral modul for each tool needed).

Connection Example

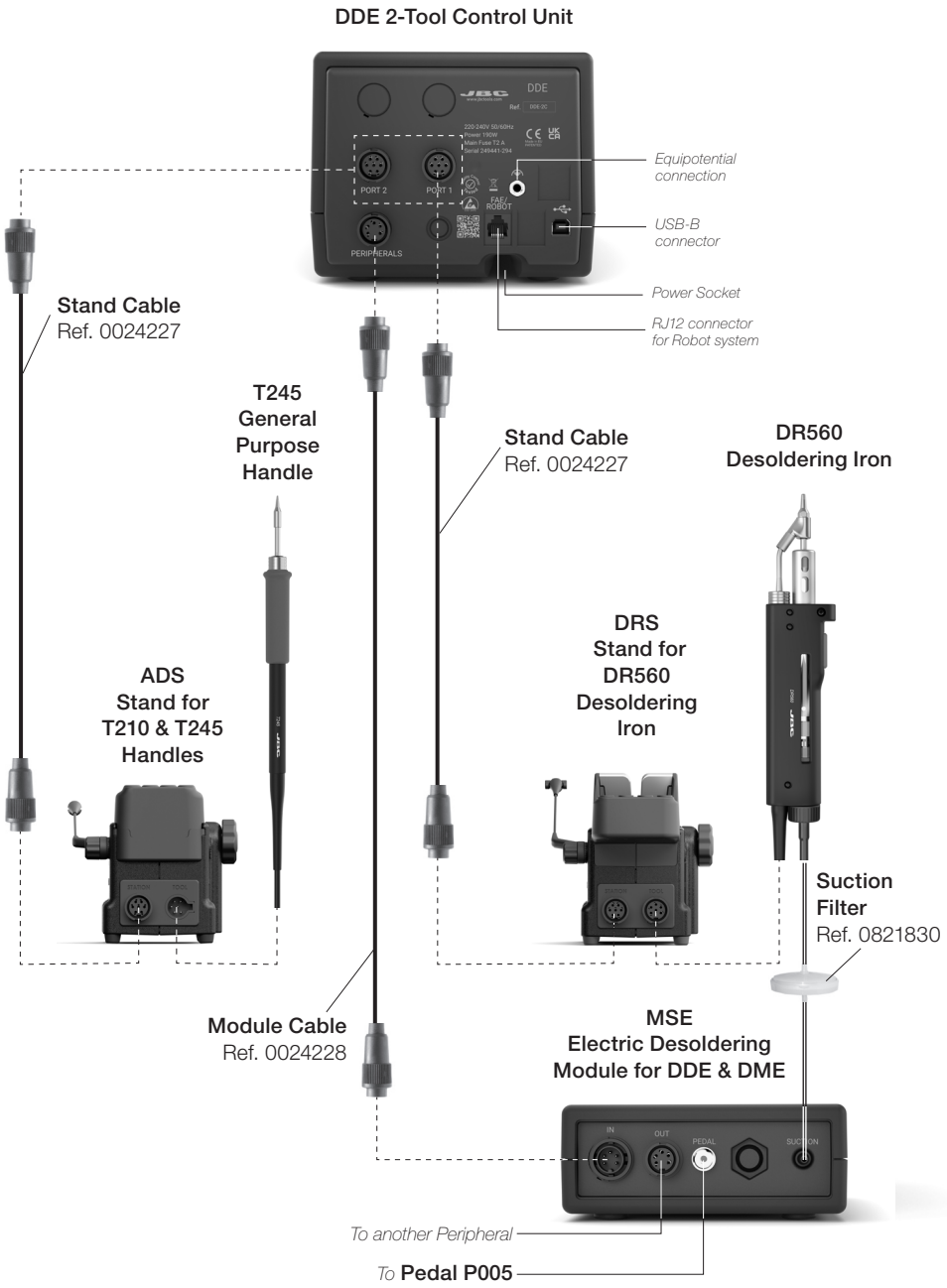

Compatibility

Select the equipment that best suit your soldering or desoldering needs.

Modular System				Peripherals		
Control Unit	**Stand**	**Tool**	**Cartridge Range**	**MSE / MVE**	**MNE**	**P405**
DDE	ADS	T210	C210			●
		T245	C245			●
		T470				●
	DNS	T210N	C210		●	●
		T245N	C245		●	●
	APS	AP250	C250			●
	AMS	AM120	C120			●
		PA120				●
	ATS	AT420	C420			●
	HTS	HT420				●
	DSS	DS360	C360	●		●
	DRS	DR560	C560	●		●

DDE Work Screen

DDE offers an intuitive user interface which provides quick access to station parameters.
Default PIN: 0105

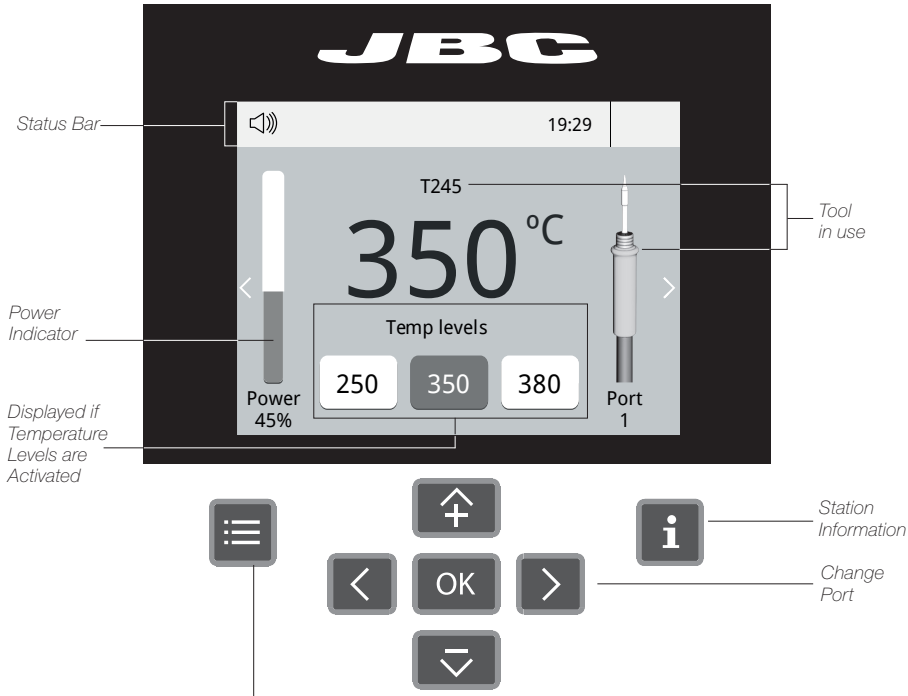

Menu Options

Set the station parameters

Station

Set the tool parameters

Tools

Display the hours worked in each cycle

Counters

Set the peripheral links with the station ports

Peripherals

Restore station parameters to default values

Reset

Troubleshooting

Station troubleshooting available on the product page at www.jbctools.com

Advanced Functionalities

Graphics

It provides detailed graphics of tip temperature and power delivery in real time during solder joint formation for analysis purposes. This helps you decide how to adjust your process or which tip to use to obtain the best quality soldering.

JBC Net

Get greater quality and control in your production.
Manage your whole soldering process remotely in real time.
For more information see **www.jbctools.com/webmanager.html.**

Update

Station update
Download the JBC Update File from **www.jbctools.com/software.html**
Insert the USB flash drive with the file downloaded to the station.

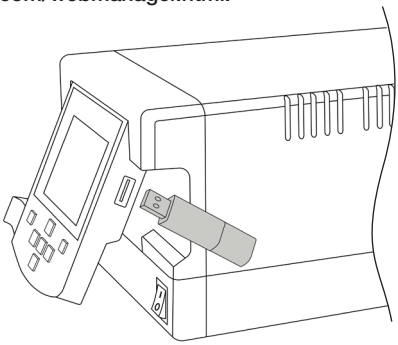

System Notifications

The following icons will be displayed on the screen's status bar.

USB flash drive is connected.

Station is controlled by a PC.

Station is controlled by a robot. downloaded to the station.

Station software update. Press INFO to start the process.

Warning. Press INFO for failure description.

Error. Press INFO for failure description, the type of error and how to proceed.

Peripheral Set Up

1. After connecting the module, enter the Peripherals Menu and select the port which you want to join with the module.

2. Select the module from the list of peripheral connections. Remember your first connection is denoted as "a", the second being "b", etc. (e.g. MNE_a, MNE_b, ...).

3. Press Menu or Back to save changes.

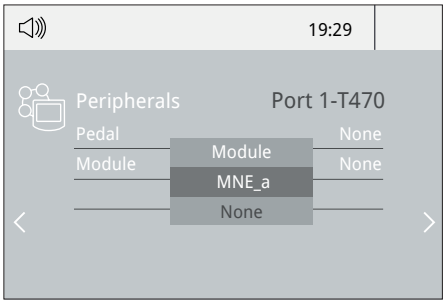

Operation

The JBC Most Efficient Soldering System

Our revolutionary technology is able to recover tip temperature extremely quickly. It means the user can work at a lower temperature and improve the soldering quality. The tip temperature is further reduced thanks to the Sleep and Hibernation modes which increase up to 5 times the life of the tip.

1. Work

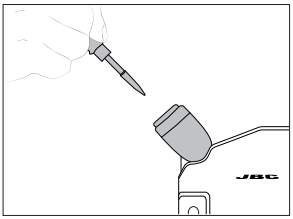

When the tool is lifted from the stand the tip will heat up to the selected temperature.

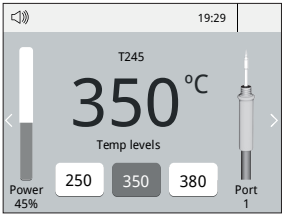

Tools Menu:
- Adjust temperature limits and cartridge.
- Set temperature levels.

2. Sleep

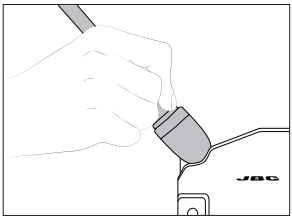

When the tool is in the stand, the temperature falls to the preset Sleep temperature.

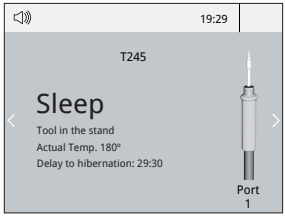

Tools Menu:
- Set Sleep temperature.
- Set Sleep delay.
  (from 0 to 9 min or no Sleep)

3. Hibernation

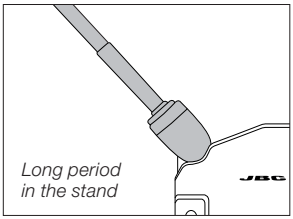

After longer periods of inactivity, the power is cut off and the tool cools down to room temperature.

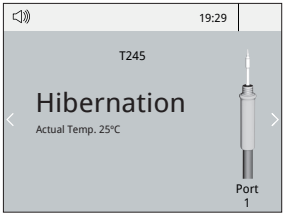

Tools Menu:
- Set Hibernation delay.
  (from 0 to 60 min or no hibernation)

USB Connector

Download the latest software from our website to improve your soldering station at www.jbctools.com/software.html.

JBC Web Manager Lite

www.jbctools.com/manager.html

Manage and monitor as many stations as your PC can handle by using JBCs Web Manager Lite. **Note:** Data can be exported to another PC.

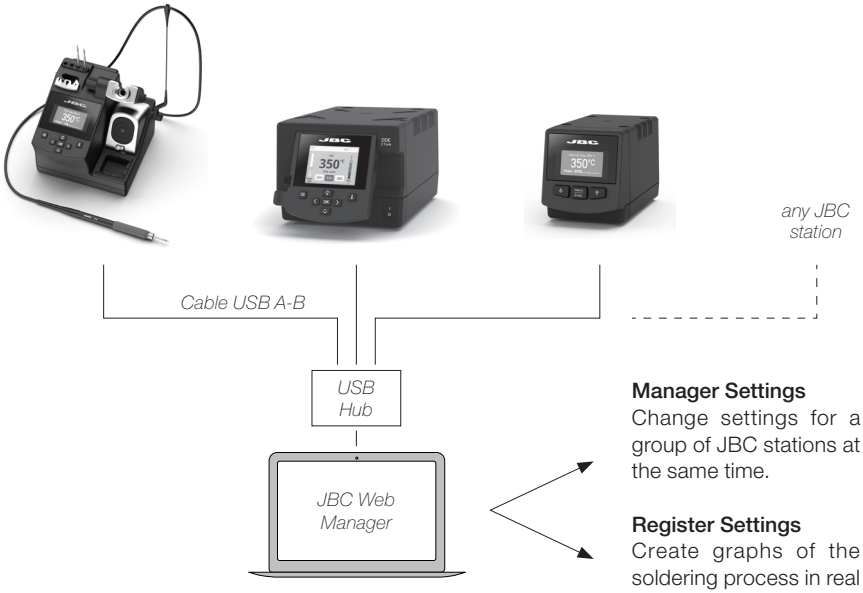

Manager Settings
Change settings for a group of JBC stations at the same time.

Register Settings
Create graphs of the soldering process in real time showing power and temperature data.

Maintenance

Before carrying out maintenance or storage, always allow the equipment to cool.

- Clean the station screen with a glass cleaner or a damp cloth.

- Use a damp cloth to clean the casing and the tool. Alcohol can only be used to clean the metal parts.

- Periodically check that the metal parts of the tool and stand are clean so that the station can detect the tool's status.

- Maintain the tip surface clean and tinned prior to storage in order to avoid tip oxidation. Rusty and dirty surfaces reduce heat transfer to the solder joint.

- Periodically check all cables and tubes.

- Replace a blown fuse as follows:

1. Pull off the fuse holder and remove the fuse. If necessary use a tool to lever it off.

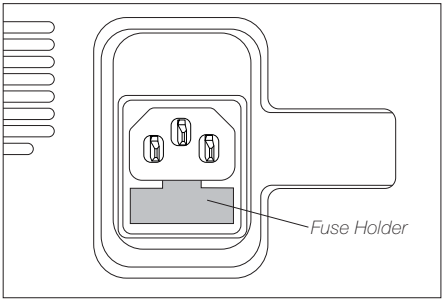

2. Press the new fuse into the fuse holder and replace it in the station.

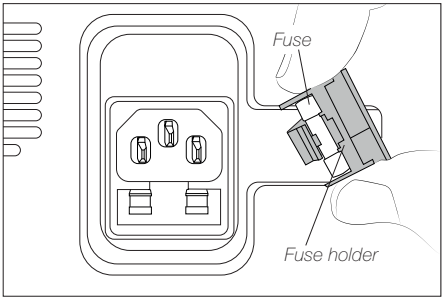

- Replace any defective or damaged pieces. Use original JBC spare parts only.

- Repairs should only be performed by a JBC authorized technical service.

Safety

It is imperative to follow safety guidelines to prevent electric shock, injury, fire or explosion.

- Do not use the units for any purpose other than soldering or rework. Incorrect use may cause a fire.

- The power cord must be plugged into approved bases. Be sure that it is properly grounded before use. When unplugging it, hold the plug, not the wire.

- Do not work on electrically live parts.

- The tool should be placed in the stand when not in use in order to activate the sleep mode. The soldering tip or nozzle, the metal part of the tool and the stand may still be hot even when the station is turned off. Handle with care, including when adjusting the stand position.

- Do not leave the appliance unattended when it is on.

- Do not cover the ventilation grills. Heat can cause inflammable products to ignite.

- Avoid flux coming into contact with skin or eyes to prevent irritation.

- Be careful with the fumes produced when soldering.

- Keep your workplace clean and tidy. Wear appropriate protection glasses and gloves when working to avoid personal harm.

- Utmost care must be taken with liquid tin waste which can cause burns.

- This appliance can be used by children over the age of eight and also persons with reduced physical, sensory or mental capabilities or lack of experience provided that they have been given adequate supervision or instruction concerning the use of the appliance and understand the hazards involved. Children must not play with the appliance.

- Maintenance must not be carried out by children unless supervised.

Notes

Notes

Notes

Notes

Specifications

DDE
2-Tool Control Unit
Ref.: **DDE-9C** 100V 50/60Hz. Input fuse: T5A. Output: 23.5V
Ref.: **DDE-1C** 120V 50/60Hz. Input fuse: T4A. Output: 23.5V
Ref.: **DDE-2C** 230V 50/60Hz. Input fuse: T2A. Output: 23.5V

- Output Peak Power:	150W per tool
- Temperature Range:	90 - 450 °C / 190 - 840 °F
- Idle Temp. Stability (still air):	±1.5ºC / ±3ºF / Meets and exceed IPC J-STD-001F
- Temp Accuracy:	±3% (using reference cartridge)
- Temp Adjustment:	±50ºC / ±90ºF Through station menu setting
- Tip to Ground Voltage/Resistance:	Meets and exceed ANSI/ESD S20.20-2014 IPC J-STD-001F
- Ambient Operating Temp:	10 - 50 ºC / 50 - 122 ºF
- Connections:	USB-A / USB-B / Peripherals connectors RJ12 connector for Robot
- Control Unit Dimensions/Weight: (L x W x H)	148 x 232 x 120 mm / 3.82 kg 5.8 x 9.1 x 4.7 in / 8.41 lb
- Total Package:	258 x 328 x 208 mm / 4.3 kg 10.15 x 12.9 x 8.1 in / 9.5 lb

Complies with CE standards.
ESD safe.

Warranty
JBC's 2 year warranty covers this equipment against all manufacturing defects, including the replacement of defective parts and labour.
Warranty does not cover product wear or misuse.
In order for the warranty to be valid, equipment must be returned, postage paid, to the dealer where it was purchased.
Get 1 extra year JBC warranty by registering here: https://www.jbctools.com/productregistration/ within 30 days of purchase.

This product should not be thrown in the garbage.
In accordance with the European directive 2012/19/EU, electronic equipment at the end of its life must be collected and returned to an authorized recycling facility.

www.jbctools.com

0029145 - 2311 22