CONXALL®

A SWITCHCRAFT COMPANY

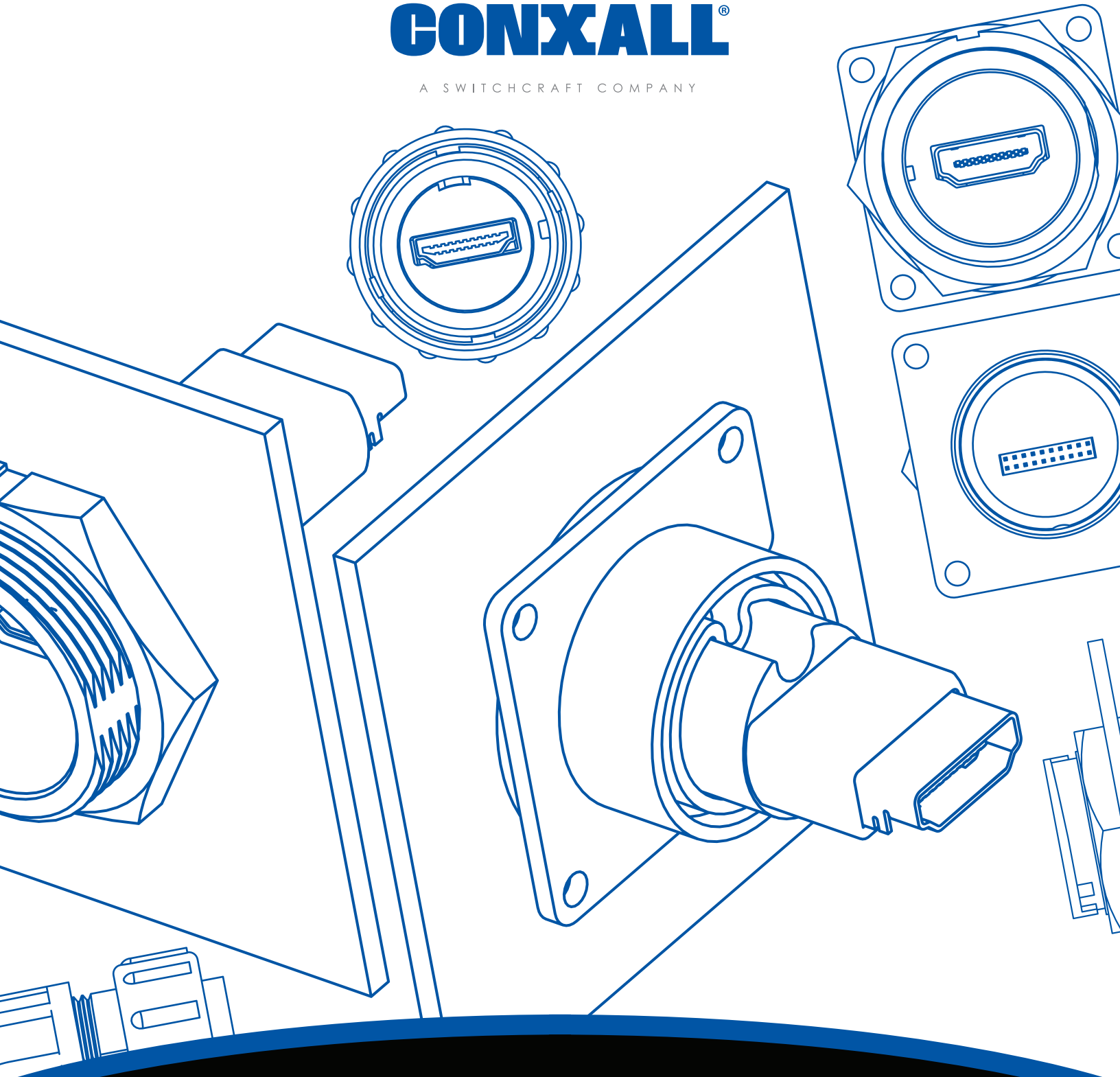

HDMI WEATHERTIGHT CONNECTORS

NPB | C714

601 E WILDWOOD | VILLA PARK, IL 60181 | P: 630.834.7504 | F: 630.834.8540 | WWW.CONXALL.COM

sales@prom-elec.com / ООО ПРОМЭЛЕКТРОНИКА

HDMI WEATHERTIGHT CONNECTORS

NPB | C714

FEATURES & BENEFITS

- Sealed to IP67 & IP68 NEMA 250 (6P) (when panel connector is rear mounted and mated to the cable)
- Feed-thru termination on the panel for easy field installation
- Easy to assemble
- Quick connect bayonet or threaded style interface
- RoHS Compliant - UV F1 rated housing

APPLICATIONS

- Data transmission
- Military or industrial GPS location devices
- Instrumentation
- Medical data carts
- Data acquisition units
- General industrial applications

HDMI WEATHERTIGHT CONNECTORS

NPB | C714

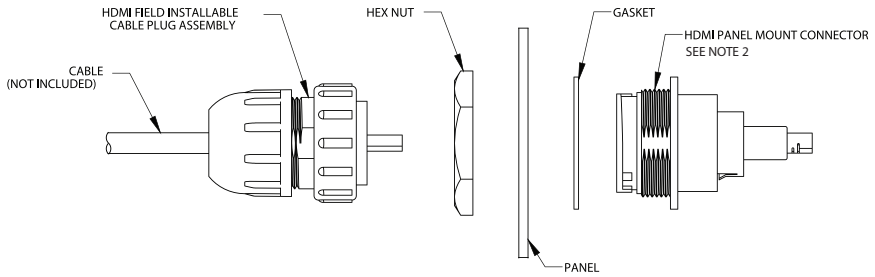

INDUSTRIAL HDMI CABLE PLUG
QUICK CONNECT COUPLING
(DCC-HDMIB-310 SHOWN)

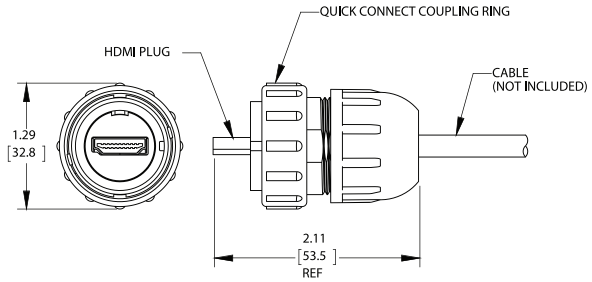

INDUSTRIAL HDMI CABLE PLUG
THREADED COUPLING
(DCC-HDMIT-310 SHOWN)

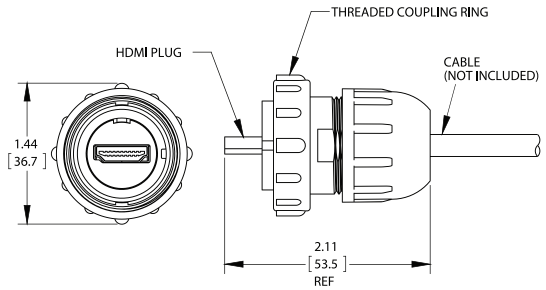

DCP-HDMIB-F SHOWN
(HDMI FEED-THRU CONNECTOR WITH QUICK-CONNECT COUPLING)

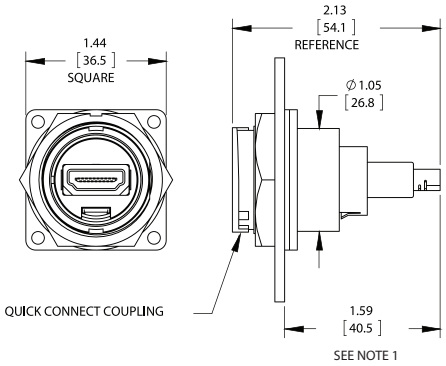

DCP-HDMIT-F SHOWN
(HDMI FEED-THRU CONNECTOR WITH THREADED COUPLING)

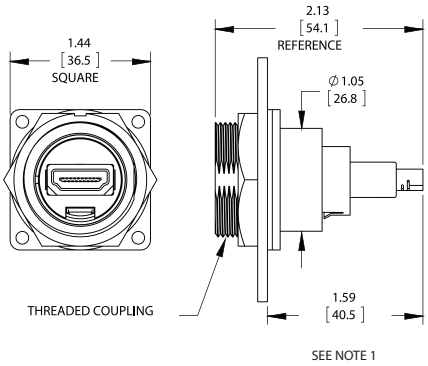

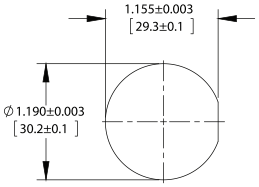

RECOMMENDED PANEL CUT-OUT
QUICK CONNECT COUPLING
OR THREADED COUPLING

NOTE 1: THE DIMENSION DOES NOT INCLUDE GASKET COMPRESSION.
NOTE 2: THE PANEL CONNECTOR MEETS IP67 & IP68, NEMA 250 (6P) WHEN CONNECTOR IS REAR MOUNTED USING THE HEX NUT.

UNITS ARE LISTED IN INCHES [mm]. ALL DIMENSIONS ARE REFERENCE ONLY.

HDMI WEATHERTIGHT CONNECTORS

NPB | C714

DCP-HDMIB-SC SHOWN
(HDMI CONNECTOR TO PCB HOLES WITH QUICK-CONNECT COUPLING)

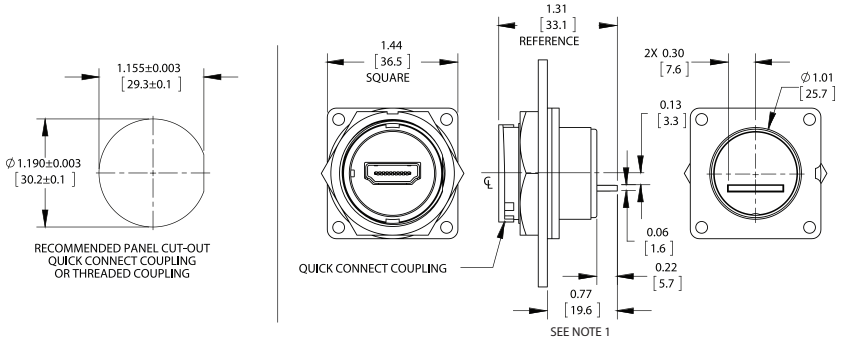

DCP-HDMIT-SC SHOWN
(HDMI CONNECTOR TO PCB HOLES WITH THREADED COUPLING)

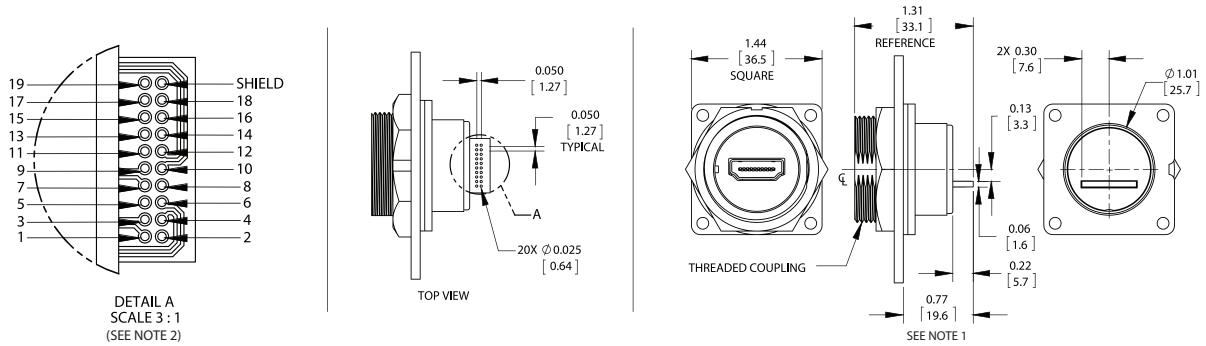

DCP-HDMIB-HD SHOWN
(HDMI CONNECTOR TO HEADER WITH QUICK-CONNECT COUPLING)

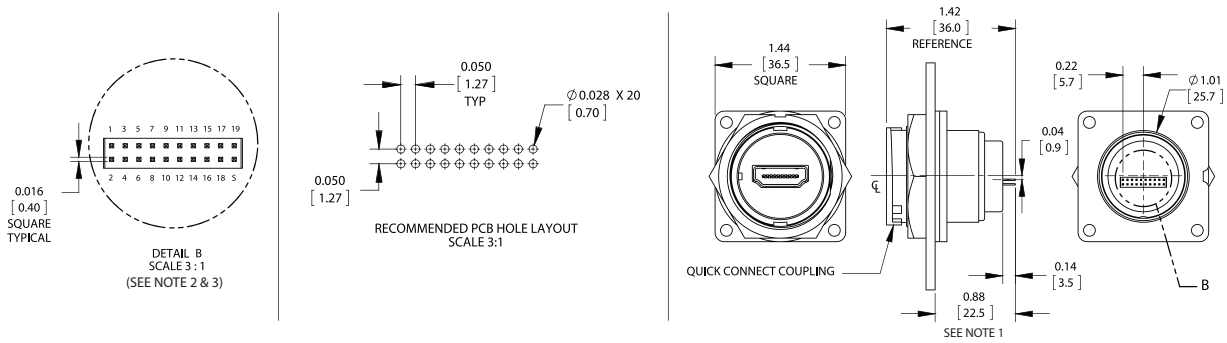

DCP-HDMIT-HD SHOWN
(HDMI CONNECTOR TO HEADER WITH THREADED COUPLING)

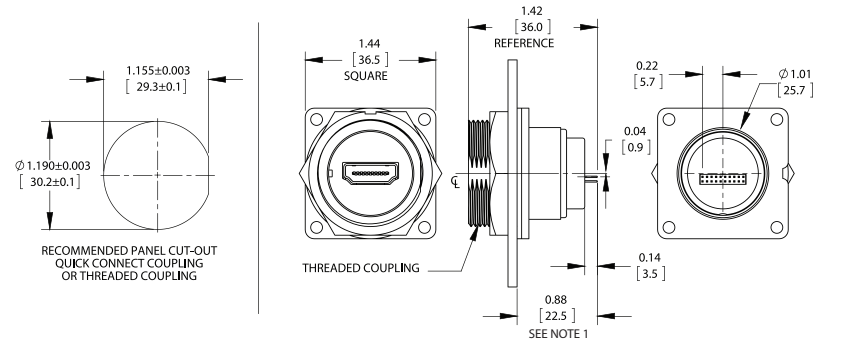

NOTE 1: THE DIMENSION DOES NOT INCLUDE GASKET COMPRESSION. NOTE 2: THE PINOUT IS TYPICAL FOR THREADED OR QUICK CONNECT COUPLING.
NOTE 3: THE NUMBERS ARE FOR REFERENCE ONLY AND DO NOT APPEAR ON THE PART.
UNITS ARE LISTED IN INCHES [mm]. ALL DIMENSIONS ARE REFERENCE ONLY.

HDMI WEATHERTIGHT CONNECTORS

NPB | C714

SPECIFICATIONS

MECHANICAL SPECIFICATIONS	
Life:	Minimum 350 insertion/withdrawal cycles
Hex Nut Torque:	10-12 in-lb max
Coupling Locking Style:	Quick Connect (Bayonet) or Threaded
Backshell Style:	Threaded Nut-Squeezed Grommet
ELECTRICAL SPECIFICATIONS	
Current Rating:	0.5 A
Contact Resistance:	50 mΩ max
Insulation Resistance:	10 MΩ min (mated)
Dielectric Withstanding Voltage:	300 V AC/one minute (mated)
ENVIRONMENTAL SPECIFICATIONS	
Temperature Rating:	-20 °C to +80 °C (-4ºF to +176°F)
Moisture Resistance:	Mil-Std 202G Method 106G
Insulation Resistance:	Mil-Std 202G Method 302
Vibration:	Mil-Std 202G Method 201A
Thermal Shock:	Mil-Std 202G Method 107G
Weathertight:	IP67 & IP68, NEMA 250 (6P) (when rear mounted & mated)
Salt Atmosphere (Corrosion):	Mil-Std 202G Method 101E
MATERIAL SPECIFICATIONS	
Plug Nut, Coupling Ring:	Thermoplastic
Plug Housing, Insert:	Thermoplastic
Sealing Ring, O-Ring:	Elastomer
Panel Housing, Hex Nut:	Thermoplastic
Gasket:	Elastomer
HDMI Plug:	
Shell:	Copper Alloy, Nickel Plated
Contacts:	Copper Alloy, Gold Plated over Nickel
Insulator:	Thermoplastic
PCB:	FR-4
HDMI Feed-Thru Receptacle:	
Shell:	Copper Alloy, Nickel Plated
Contacts:	Copper Alloy, Gold Plated
Insulator:	Thermoplastic
HDMI PCB Receptacle:	
Shell:	Copper Alloy, Tin Plated
Contacts:	Copper Alloy, Selective Gold Plated
Insulator:	Thermoplastic
MOLDED CABLE ASSEMBLIES	Consult factory for molded options
OTHER	
Flame Rating:	UL 94V-0
Recommended Panel Thickness:	1/32" - 3/16" [0.8mm to 4.8mm] - Quick Connect Coupling 1/32" - 5/32" [0.8mm to 3.9mm] - Threaded Coupling
Recommended Cable Type	
Cable Type:	HDMI High Speed
Outer Cable O.D. Range:	0.197"-0.236" [5.0mm-6.0mm]

HDMI WEATHERTIGHT CONNECTORS

NPB | C714

PART NUMBERS

INDUSTRIAL HDMI PLUG - FIELD INSTALLABLE

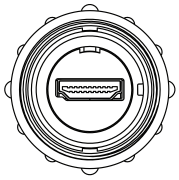

PART NUMBER	COUPLING TYPE
DCC-HDMIB-310	QUICK CONNECT
DCC-HDMIT-310	THREADED

HDMI PANEL CONNECTOR - FEED-THRU

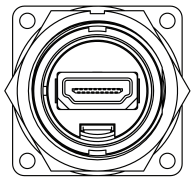

PART NUMBER	COUPLING TYPE	DESCRIPTION
DCP-HDMIB-F	QUICK CONNECT	HDMI FEED-THRU PANEL CONNECTOR
DCP-HDMIT-F	THREADED	HDMI FEED-THRU PANEL CONNECTOR

HDMI PANEL CONNECTOR - HDMI TO HEADER

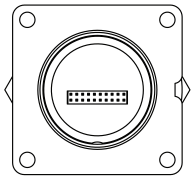

PART NUMBER	COUPLING TYPE	DESCRIPTION
DCP-HDMIB-HD	QUICK CONNECT	HDMI CONNECTOR TO 20 PIN HEADER
DCP-HDMIT-HD	THREADED	HDMI CONNECTOR TO 20 PIN HEADER

HDMI PANEL CONNECTOR - HDMI TO PCB HOLES

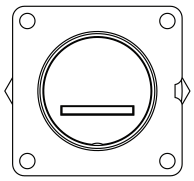

PART NUMBER	COUPLING TYPE	DESCRIPTION
DCP-HDMIB-SC	QUICK CONNECT	HDMI CONNECTOR TO PCB HOLES
DCP-HDMIT-SC	THREADED	HDMI CONNECTOR TO PCB HOLES