Specification

Client Name: _____

Client P/N: _____

Wenrun P/N: 2835WW-B4T-8-E30-60A-01

Date: **2025-03-11**

Customer confirm	Approved by	Checked by	Issued by
	汪辉	杜建伟	郭颖

sales@prom-elec.com / ООО ПРОМЭЛЕКТРОНИКА

Part No.	2835WW-B4T-8-E30-60A-01		
Emitted Color	Warm White	Len's Color	Yellow
Chip Material	InGaN	--	--

◆ General Information

Product Nomenclature

The following table describes the available color, color rendering index (Ra) and product series. For more flux and forward voltage information, please consult the Bin range of Chromaticity Coordinates and Chromaticity Coordinates & Bin grading diagram.

2835 WW – B4T– 8 – E30 – 60A – 01

- 01 — Serial number
- 60A — Forward voltage
- 60A — Forward Current
- E30 — CT colour temperature
- 8 — RA
- B4T — Characteristic
- B4T — Power&Chip Size
- WW — Emitted Color
- 2835 — Shape Kinds

◆ Features:

Compatible with automatic placement equipment
Compatible with reflow solder process
This product doesn't contain restriction Substance, comply ROHS standard.

◆ Applications:

Automotive and Telecommunication
General use for indicators

◆ Package Dimensions:

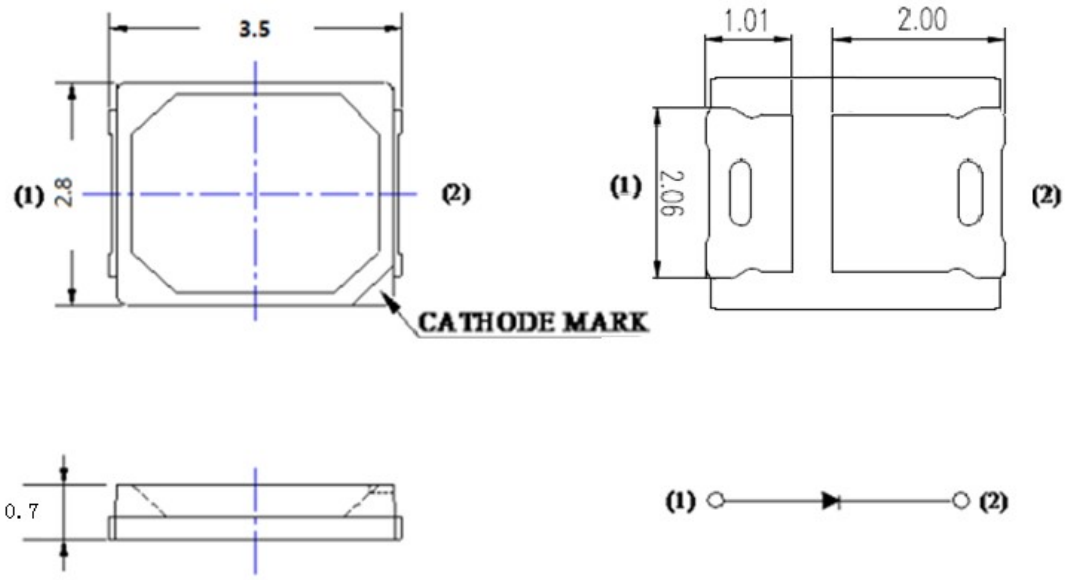

Unit：mm
Tolerance：±0.2mm unless otherwise noted
Electrodes: Ag Plating Copper Alloy
Encapsulating Resin: Silicon Resin
Package: Heat-Resistant Polymer

◆ Absolute Maximum Rating （Ta=25℃）

Parameter	Symbol	Max.	Unit
Power Dissipation	P_d	400	mW
Pulse Forward Current	I_{FP}	300	mA
DC Forward Current	I_F	120	mA
Reverse Voltage	V_R	5	V
Operating Temperature Range	Topr	-40℃～85℃	℃
Storage Temperature Range	Tstg	-40℃～100℃	℃

* I_{FP} condition: pulse width ≤1ms ,duty cycle ≤1/10

◆ Electrical Optical Characteristics（Ta=25℃）

Parameter	Symbol	Min	Typ.	Max.	Unit	Test Condition
Luminous Flux	Φ	22	--	28	lm	I_F =60mA
Forward Voltage	V_F	2.8	--	3.3	V	I_F =60mA
Dominant Wavelength	λ_d	580	--	584	nm	I_F=60mA
Chromaticity Coordinates	X	0.4191	--	0.4633	/	I_F=60mA
	Y	0.3828	--	0.4251	/	I_F=60mA
Viewing Angle	$2\theta_{1/2}$	--	120	--	Deg.	I_F =60mA

Notes: 1.Tolerance of Luminous Intensity ±11%

2. Tolerance of Forward voltage ±0.1V

3. Luminous Intensity is measured by WENRUN's equipment on bare chips

◆ BIN range

Luminous Flux (tolerance is ±10% @ If =60mA):

BIN CODE	Min.(l m)	Max. (lm)
E	22	24
F	24	26
G	26	28

Forward voltage (tolerance is ±0.1V @ If =60mA):

BIN CODE	Min.(V)	Max. (V)
R	2.8	2.9
S	2.9	30
T	3.0	3.1
U	3.1	3.2
V	3.2	3.3

Bin range of Chromaticity Coordinates (tolerance is ±0.01 @ If =60mA):

Bin Code	X,Y											
	X_1	Y_1	X_2	Y_2	X_3	Y_3	X_4	Y_4	X_5	Y_5	X_6	Y_6
E30M	0.4287	0.3919	0.4426	0.3963	0.4523	0.4145	0.4371	0.4097	/	/	/	/
E30A	0.4487	0.4208	0.4447	0.4121	0.4523	0.4145	0.44745	0.4054	0.4523	0.4069	0.4633	0.4251
E30B	0.4313	0.3859	0.4437	0.389	0.4534	0.4069	0.44745	0.4054	0.4426	0.3963	0.43565	0.3941
E30C	0.4487	0.4208	0.4447	0.4121	0.4371	0.4097	0.4329	0.4008	0.4269	0.3995	0.435	0.4171
E30D	0.4329	0.4008	0.4269	0.3995	0.4191	0.3828	0.4313	0.3859	0.43565	0.3941	0.4287	0.3919

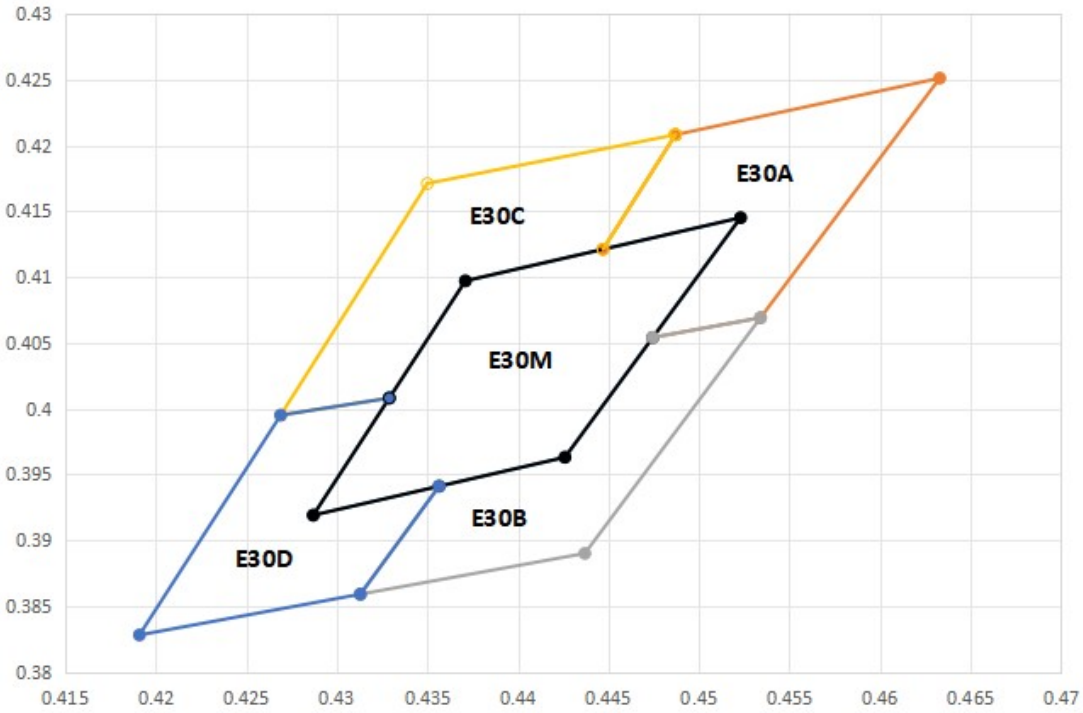

◆ Package Label:（For example）

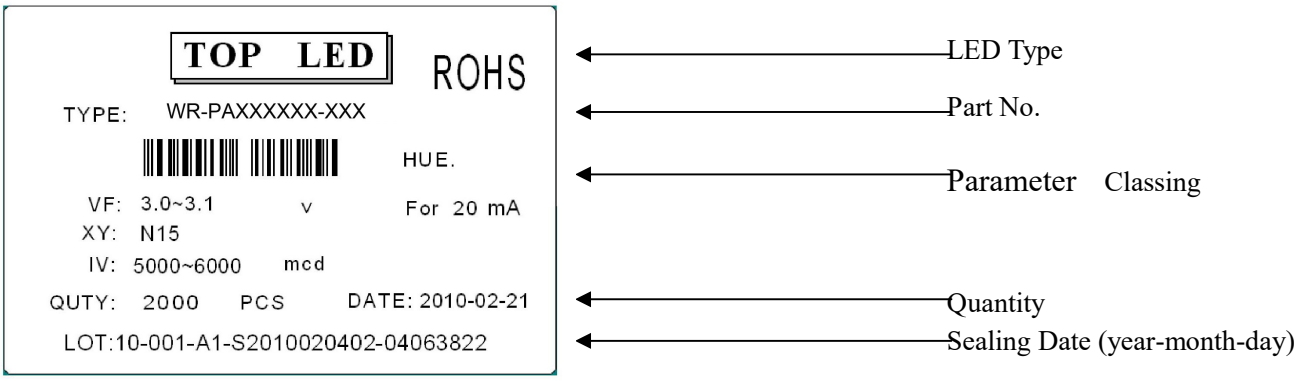

◆ Soldering Pad Dimensions:

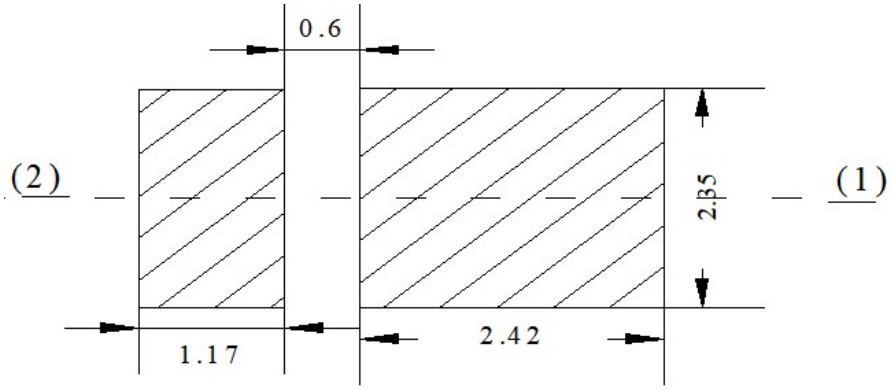

◆ Soldering Conditions (Maximum allowable soldering conditions)

Reflow soldering profile
<Pb-free solder>

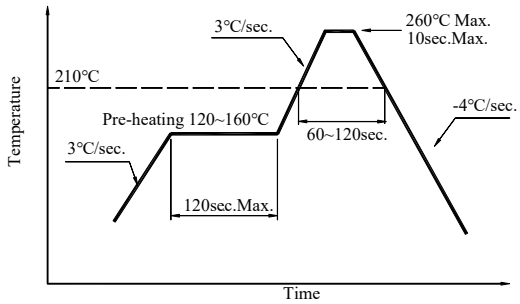

- Reflow soldering should not be done more than two times.
- Do not stress its resin while soldering.
- After soldering,do not warp the circuit board.
- Pay attention to electrostatic（ESD）.

◆ Package Tape Specifications: (4000 or 2000 pcs/Reel)

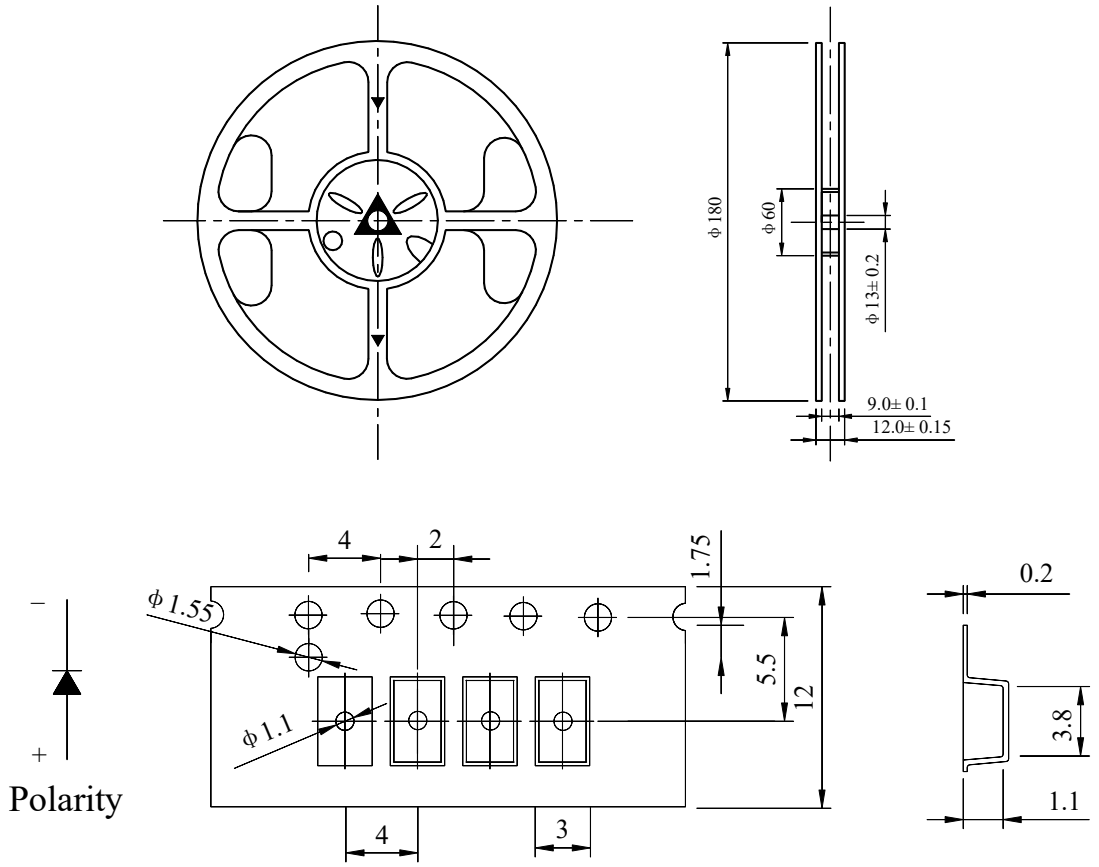

Reel Lead Min.60mm No LEDs

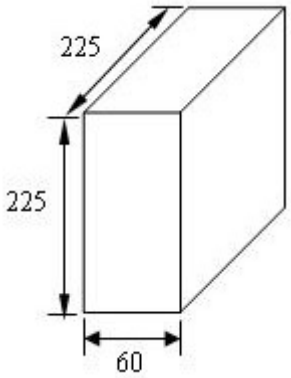

5 Reels in one Box

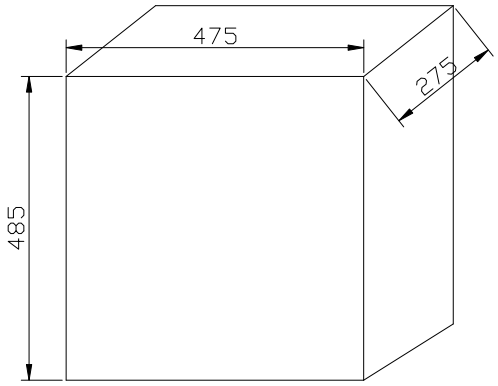

16 Boxes in one Carton

◆ Typical Electro-Optical Characteristics Curves：

Relative Luminous Intensity Vs. Wavelength

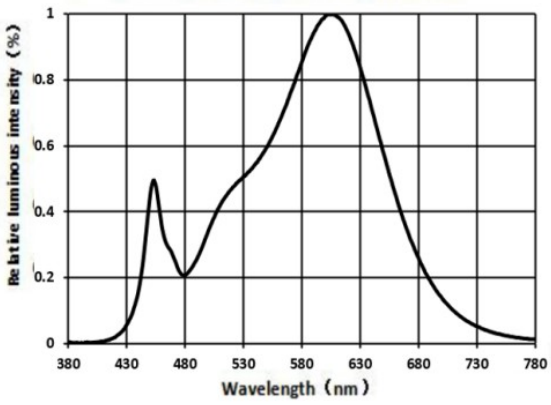

Forward Current vs Forward Voltage at Ta=25℃

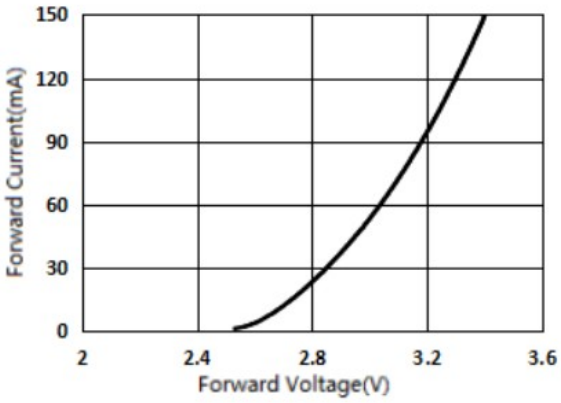

Forward Current Vs. Ambient Temperture

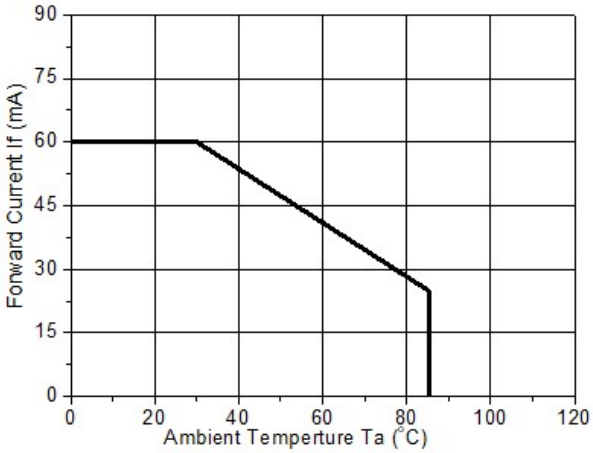

Forward Current Vs.Relative Luminosity Ta=25℃

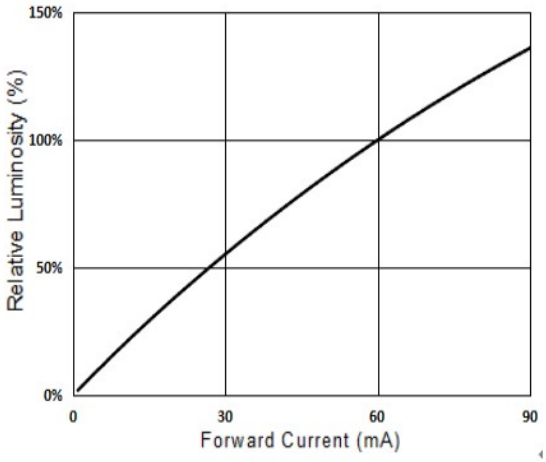

Relative Luminosity Vs. Ambient Temperature

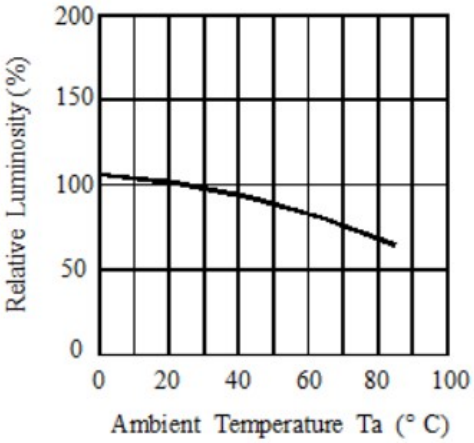

Radiation diagram

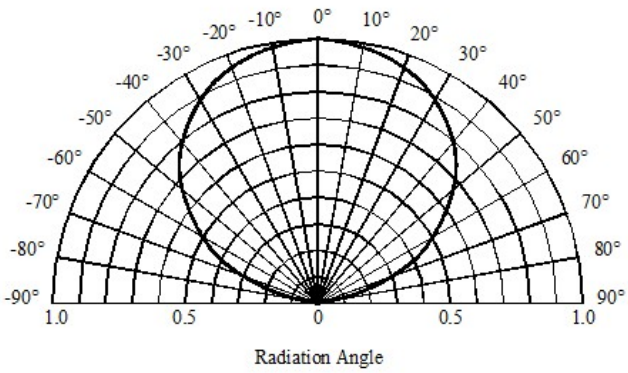

◆ Reliability

(1) Test Items and Conditions

NO	Test Item	Test Conditions	Sample	Ac/ Re
1	Temperature Cycle	-40±5˚C→25±5˚C→100±5˚C→25±5˚C (30min，5min，30min，5min) 100 Cycles	20	0/1
2	High Temperature Storage	Ta：100±5˚C Test time=1000HRS(-24HRS,+72HRS)	20	0/1
3	High Temperature And High Humidity Working	Ta：85±5˚C，RH:85±5%，I_F=150mA Test time=500HRS(-24HRS,+72HRS)	20	0/1
4	Low Temperature Storage	Ta：-40±5˚C Test time=1000HRS(-24HRS,+72HRS)	20	0/1
5	Operating Life Test	Connect with a power I_F=150mA Ta=Under room temperature Test time=1000HRS(-24HRS,+72HRS)	20	0/1
6	Thermal Shock	-40±5˚C→100±5˚C (15min，15min) 100 Cycles	20	0/1
7	IR-Reflow Pb-Free Process	① 80 ˚C ② 100 ˚C ③ 120 ˚C ④ 160 ˚C ⑤ 170˚C⑥235˚C⑦270˚C⑧255˚C，60cm/min，2 times	20	0/1

(2)Criteria of judging the damage

Item	Symbol	Test condition	Criteria for judgement	
			Min.	Max.
Forward voltage	V_F	I_F=Test Current	/	U.S.L*1.1
Reverse current	I_R	V_R=5V	/	15uA
Luminous intensity	I_V	I_F=Test Current	L.S.L*0.7	/
Wave length	λ D/ λ P	I_F=Test Current	/	U.S.L±2nm
Appearance	/	View check	No mechanical damage	

* U.S.L: Upper standard level L.S.L: Lower standard level

◆ Storage and application notices

1. Storage

1. Before opening the package: the LEDs should be kept at 5-30℃ and 60%RH or less; the LEDs should be used within three months ;

2. LED SMD is a kind of semiconductor that is sensitive to the humility. So after opening the package, LED must be used within 24Hrs, or else should be kept at 5-30 ℃ and 30%RH or less, and the LEDs should be used within 7days after opening the package. If unused LEDs remain, they should be stored in moisture proof packages, recommended to return the LEDs to the original moisture proof bag and to reseal the moisture proof bag again. If the LEDs have exceeded the storage time, baking treatment should be performed more than 24Hs at 60ºC±5ºC.
3. The internal and esterand boxes can not be contacted with ground to prevent absorption of moisture;
4. No acid, alkali, salt, corrosive and explosive gas; away from sunlight and keep the environment clean;

2. Application

1. Do not use any unknown chemical liquid to clean LED, it will damage the LED resin surface; use the alcohol under the room temperature if necessary but less than 1 min, or use the ultrasonic cleaning with proper characters, such as correct power, frequency ,etc;
2. Do not touch the epoxy resin area when carrying LEDs by tweezers (as the following pictures), especially after the soldering process, the epoxy resin will turn to soft, the internal instruction will be damaged by the tweezers which cause the electric character's failure; nozzle is recommended by using SMT mounting.

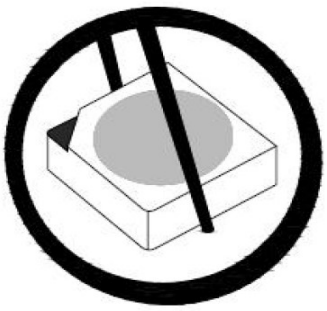

Correct

Incorrect

3. Soldering iron: double-side soldering iron with power of less than 25W; soldering temperature: less than

300℃; soldering time: less than 3sec.; 1 time completed is recommended, if the 2nd soldering process is requested, 3mins must be left to ensure the high temperature status can return to room temperature;

a. REFLOW soldering: set and test the temperature of the different area of REFLOW equipment in advance;

b. To set the peak temperature according to different SMDs, but the actual peak temperature should be less than 260 ℃ ,processing time should be less than 10sec, only 1 time is allowed;

4. SMDs should be soldered at the coordinated position on the PCB ;

5. Note of Electrical matter:

① One-way conduction, LED does not allow the reverse driving;

② LED is a kind of constant current component which can not be lighted by the constant voltage mode; a smaller voltage fluctuation can cause the large current fluctuation which causes the failure of LED;

Each LED should be drove under constant current mode if in a parallel circuit design, otherwise, the colour and brightness will be nonuniform; When the environmental temperature rising, the LED junction temperature will rise, internal resistance will decrease, so the current will be increased by the constant voltage power which short the life span;

③ If the brightness of lighting source can meet the requirement, we recommend using the driving current less than the rated current, in order to improve the product's reliability;

6. LED is a kind of electrostatic sensitive devises, anti-static measures have to be processed during storage and operation:

① LED production workshop should lay anti-static floor and ground connection, the work table have to use the anti-static materials and cover a table mater with the surface resistance of 10^6-$10^9\Omega$

② Production machine: REFLOW, SMT equipment, electric iron, test equipment; all the equipments must be well grounded, and the grounding alternating current impedance should be less than 1.0Ω. A fan need to be installed on the equipments and production processes that easy to generate static electricity; the operators must wear anti-static clothing, shoes, wristband, and gloves, etc. in the process;

③ LEDs must be contained in the anti-static box, and all the package material should be the anti-static materials;

7. The details electronic characters can refer to our product specification.

◆ Notes:

1、Above specification may be changed without notice. We will reserve authority on material change for above specification.

2、When using this product, please observe the absolute maximum ratings and the instructions for the specification sheets. We assume no responsibility for any damage resulting from use of the product which does not comply with the instructions included in the specification sheets.