BROOKE-S

~25° spot beam. Assembly with installation tape.

TECHNICAL SPECIFICATIONS:

Dimensions	Ø 45.0 mm
Height	20.1 mm
Fastening	tape
Colour	metal
Box size	480 x 280 x 300 mm
Box weight	3.2 kg
Quantity in Box	384 pcs
ROHS compliant	yes

MATERIAL SPECIFICATIONS:

Component	Type	Material	Colour
BROOKE-S	Reflector	PC	metal
BROOKE-TAPE	Tape	PU tape	

LEDiL is a registered trademark of LEDiL Oy in the European Union, USA, and certain other countries.

sales@prom-elec.com / ООО ПРОМЭЛЕКТРОНИКА

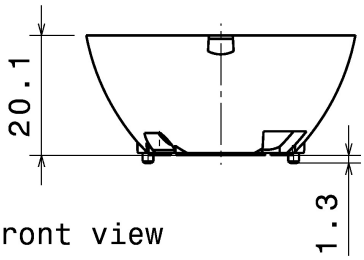

Front view

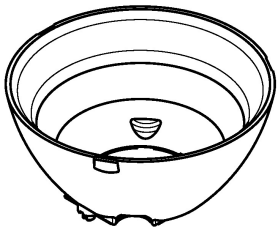

Isometric view
Scale: 1:1

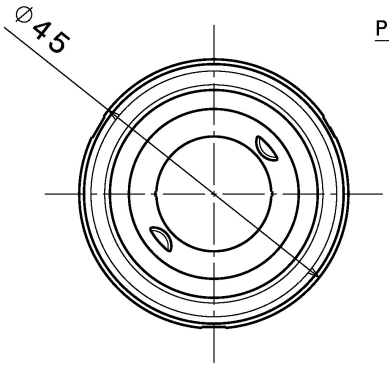

Top view

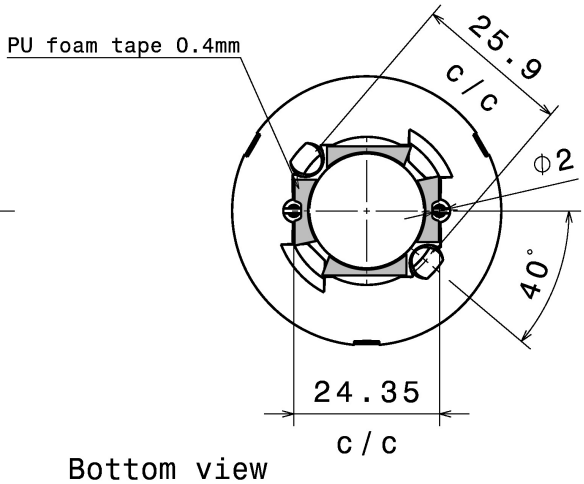

Bottom view

INDEX	PART NO	DESCRIPTION	MATERIAL	COLOUR
1	-	BROOKE reflector	PC	metal

Tolerances if not otherwise shown
According to DIN ISO 2768-1
Linear measures:
Up to 30mm class M, otherwise class C.
According to DIN ISO 2768-2
Form and position: class L

Ledil Oy
Salorankatu 10
FIN 24240 SALO
Finland

THIRD ANGLE PROJECTION:

DRAWING TITLE
BROOKE-tape series

This drawing is the property of LEDiL Oy. It may not be reproduced, copied or communicated without a written agreement with LEDiL Oy.

SIZE A4

PART NUMBER -

SCALE 1:1 | WEIGHT - | SHEET 1/1

LEDiL is a registered trademark of LEDiL Oy in the European Union, USA, and certain other countries.

PHOTOMETRIC DATA (MEASURED):

bridgelux

LED	BXRA ES Rectangle
FWHM	24.0°
Efficiency	94 %
Peak intensity	cd/lm
LEDs/each optic	1
Light colour	White
Required components:	

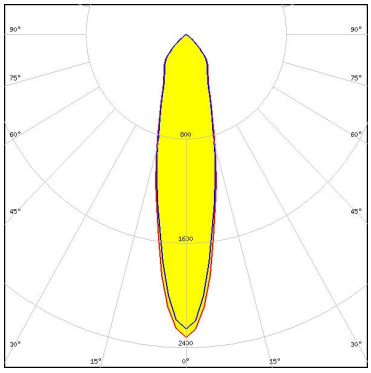

bridgelux

LED	V6 Gen6
FWHM	12.0°
Efficiency	94 %
Peak intensity	7.300 cd/lm
LEDs/each optic	1
Light colour	White
Required components:	

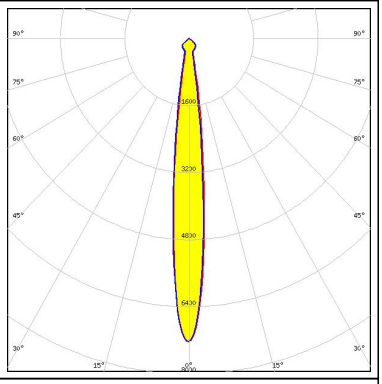

bridgelux

LED	V8 Gen6
FWHM	15.0°
Efficiency	94 %
Peak intensity	5.200 cd/lm
LEDs/each optic	1
Light colour	White
Required components:	

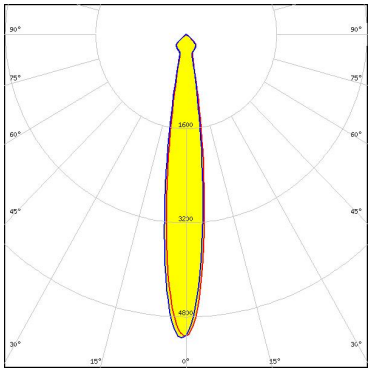

CREE

LED	CXA/B 13xx
FWHM	12.0°
Efficiency	94 %
Peak intensity	7.900 cd/lm
LEDs/each optic	1
Light colour	White
Required components:	

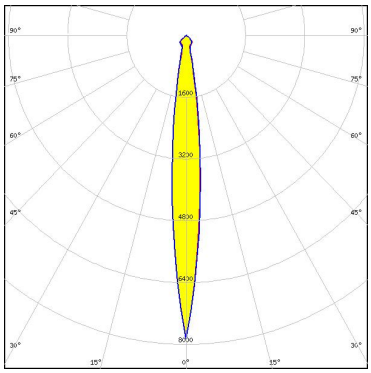

LEDiL is a registered trademark of LEDiL Oy in the European Union, USA, and certain other countries.

PHOTOMETRIC DATA (MEASURED):

CREE

LED	XHP70
FWHM	15.0°
Efficiency	94 %
Peak intensity	5.500 cd/lm
LEDs/each optic	1
Light colour	White
Required components:	

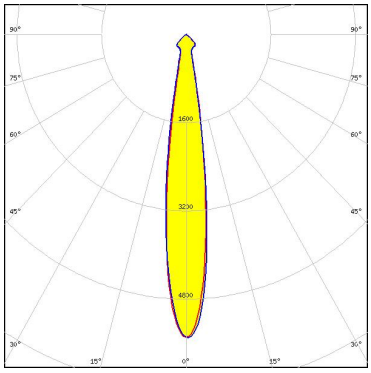

LEDiL is a registered trademark of LEDiL Oy in the European Union, USA, and certain other countries.

GENERAL INFORMATION:

NOTE: The typical beam angle will be changed by different color, chip size and chip position tolerance. The typical total beam angle is the full angle measured where the luminous intensity is half of the peak value.

Due to use of high power COB's with this product, special attention to proper thermal design is highly recommended. LEDiL has no liability for direct, indirect or consecutive damages arising from the LEDiL products being used outside of the recommended temperature range.

MATERIALS:

As part of our continuous research and improvement processes, and to ensure the best possible quality and availability of our products, LEDiL reserves the right to change material grades without notice.

PRODUCT DATA USER AGREEMENT AND DISCLAIMER:

The measured data in the provided downloadable LEDiL Product Datasheets and Mechanical 2D-Drawings is rounded and provided as reference for planning. LEDiL Oy's optical specifications have been verified by conducting performance testing of the products in accordance with the company's quality system. The reported data are averaged results of multiple measurements with typical variation. LEDiL Oy reserves the right to without prior notification make changes and improvements to its products.

LEDiL Oy assumes neither warranty, nor guarantee nor any other liability of any kind for the contents and correctness of the provided data. The provided data has been generated with highest diligence but the provided data may in reality not represent the complete possible variation range of all intrinsic parameters. Therefore, in certain cases a deviation from the provided data could occur.

LEDiL Oy reserves the right to undertake technical changes of its products without further notification which could lead to changes in the provided data. LEDiL Oy assumes no liability of any kind for the possible deviation from any provided data or any other damage resulting from the usage of the provided data.

The user agrees to this disclaimer and user agreement with the download or usage of the provided files.

LEDiL Oy
Joensuunkatu 13
FI-24240 SALO
Finland

LEDiL Inc.
228 West Page Street
Suite D
Sycamore IL 60178
USA

Local sales and technical support
www.ledil.com/where_to_buy

Shipping locations
Salo, Finland
Hong Kong, China

Distribution Partners
www.ledil.com/where_to_buy

LEDiL is a registered trademark of LEDiL Oy in the European Union, USA, and certain other countries.