1.5inch e-Paper V2

Specifications

Customer	**Standard**
Description	**1.54” E-PAPER DISPLAY**
Model Name	**1.5inch e-Paper V2**
Date	**2017/06/05**
Revision	**2.0**

sales@prom-elec.com / ООО ПРОМЭЛЕКТРОНИКА

Table of Contents

1. General Description 5
1.1 Overview 5
1.2 Feature 5
1.3 Mechanical Specification 5
1.4 Mechanical Drawing of EPD module 6
1.5 Input/Output Terminals 7
1.6 Reference Circuit 8
2. Environmental 9
2.1 Handling, Safety and Environmental Requirements 9
2.2 Reliability test 11
3. Electrical Characteristics 12
3.1 Absolute maximum rating 12
3.2 Panel DC Characteristics 12
3.3 Panel AC Characteristics 13
3.4 Power Consumption 13
3.5 MCU Interface 14
3.6 Temperature sensor operation 17
4. Typical Operating Sequence 18
4.1 Normal Operation Flow 18
4.2 Reference Program Code 19
5. Command Table 20
6. Optical characteristics 25
6.1 Specifications 25
6.2 Definition of contrast ratio 26
6.3 Reflection Ratio 26
7. Point and line standard 27
8. Packing 28
9. Precautions 29

Revision History

Rev.	Issued Date	Revised Contents
1.0	Apr.04.2019	Preliminary
2.0	Jun.05.2019	Updating

1. General Description

1.1 Over View

1.54inch e-Paper V2 is an Active Matrix Electrophoretic Display (AMEPD), with interface and a reference system design. The 1.54" active area contains 200×200 pixels, and has 1-bit B/W full display capabilities. An integrated circuit contains gate buffer, source buffer, interface, timing control logic, oscillator, DC-DC. SRAM.LUT, VCOM and border are supplied with each panel.

1.2 Features

- Support partial refresh
- 200×200 pixels display
- High contrast
- High reflectance
- Ultra wide viewing angle
- Ultra low power consumption
- Pure reflective mode
- Bi-stable display
- Commercial temperature range
- Landscape, portrait modes
- Hard-coat antiglare display surface
- Ultra Low current deep sleep mode
- On chip display RAM
- Low voltage detect for supply voltage
- High voltage ready detect for driving voltage
- Internal temperature sensor
- 10-byte OTP space for module identification
- Waveform stored in On-chip OTP
- Serial peripheral interface available
- On-chip oscillator
- On-chip booster and regulator control for generating VCOM, Gate and Source driving voltage
- I2C signal master interface to read external temperature sensor/built-in temperature sensor

1.3 Mechanical Specifications

Parameter	Specifications	Unit	Remark
Screen Size	1.54	Inch	
Display Resolution	200(H)×200(V)	Pixel	Dpi:188
Active Area	27.00 (H)×27.00 (V)	mm	
Pixel Pitch	0.135×0.135	mm	
Pixel Configuration	Square		
Outline Dimension	37.32(H)×31.80(V) ×1.05(D)	mm	
Weight	2.1±0.2	g	

1.4 Mechanical Drawing of EPD module

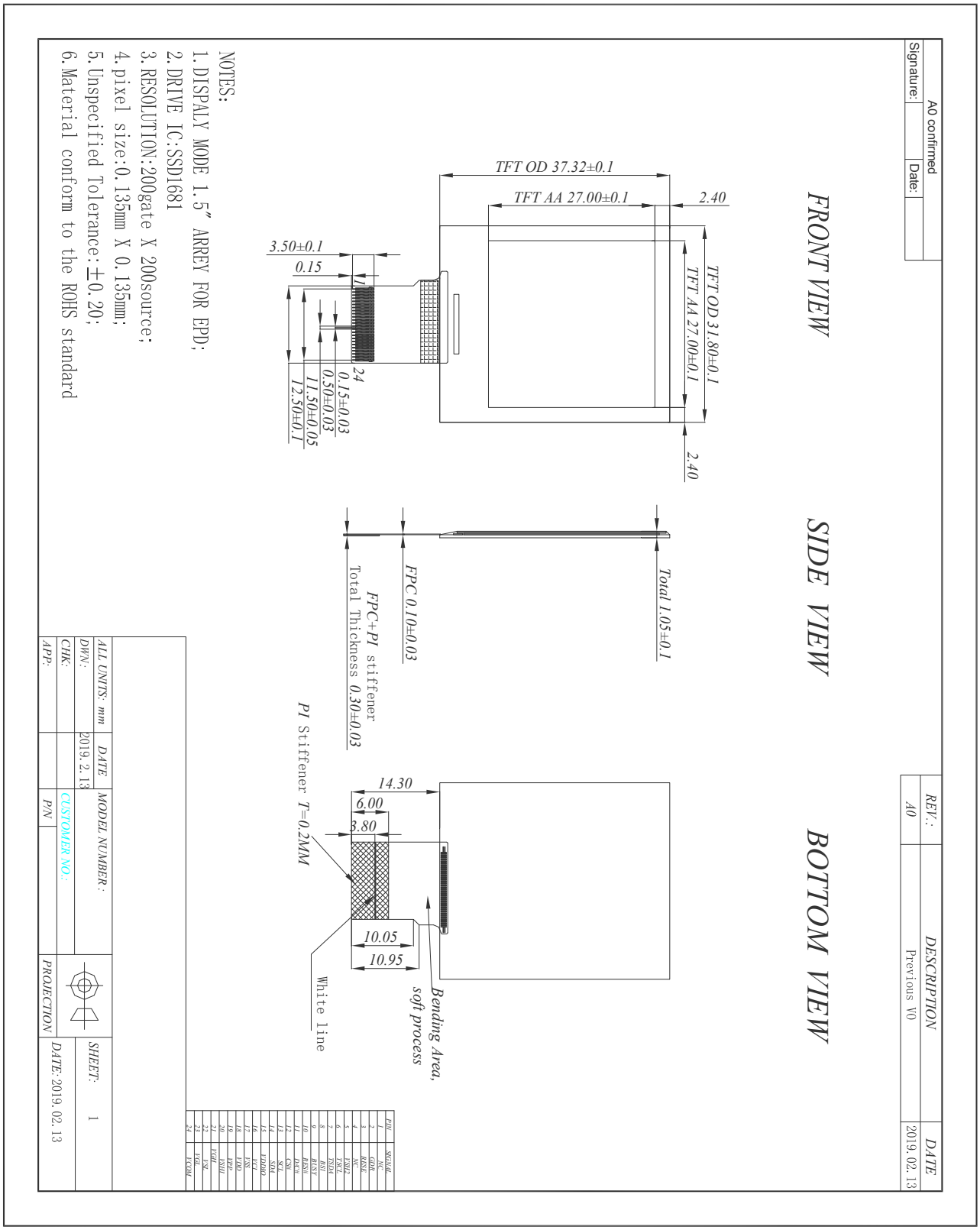

NOTES:

1. DISPALY MODE 1.5" ARREY FOR EPD;
2. DRIVE IC:SSD1681
3. RESOLUTION:200gate X 200source;
4. pixel size:0.135mm X 0.135mm;
5. Unspecified Tolerance:±0.20;
6. Material conform to the ROHS standard

1.5 Input / Output Terminals

Pin #	Single	Description	Remark
1	NC	No connection and do not connect with other NC pins	Keep Open
2	GDR	N-Channel MOSFET Gate Drive Control	
3	RESE	Current Sense Input for the Control Loop	
4	NC	No connection and do not connect with other NC pins e	Keep Open
5	VSH2	This pin is Positive Source driving voltage	
6	TSCL	I2C Interface to digital temperature sensor Clock pin	
7	TSDA	I2C Interface to digital temperature sensor Date pin	
8	BS1	Bus selection pin	Note 1.5-5
9	BUSY	Busy state output pin	Note 1.5-4
10	RES #	Reset	Note 1.5-3
11	D/C #	Data /Command control pin	Note 1.5-2
12	CS #	Chip Select input pin	Note 1.5-1
13	SCL	serial clock pin (SPI)	
14	SDA	serial data pin (SPI)	
15	VDDIO	Power for interface logic pins	
16	VCI	Power Supply pin for the chip	
17	VSS	Ground	
18	VDD	Core logic power pin	
19	VPP	Power Supply for OTP Programming	
20	VSH1	This pin is Positive Source driving voltage	
21	VGH	This pin is Positive Gate driving voltage	
22	VSL	This pin is Negative Source driving voltage	
23	VGL	This pin is Negative Gate driving voltage	
24	VCOM	These pins are VCOM driving voltage	

Note 1.5-1: This pin (CS#) is the chip select input connecting to the MCU. The chip is enabled for MCU communication: only when CS# is pulled LOW.

Note 1.5-2: This pin (D/C#) is Data/Command control pin connecting to the MCU. When the pin is pulled HIGH, the data will be interpreted as data. When the pin is pulled LOW, the data will be interpreted as command.

Note 1.5-3: This pin (RES#) is reset signal input. The Reset is active low.

Note 1.5-4: This pin (BUSY) is Busy state output pin. When Busy is High the operation of chip should not be interrupted and any commands should not be issued to the module. The driver IC will put Busy pin High when the driver IC is working such as:

- Outputting display waveform; or
- Communicating with digital temperature sensor

Note 1.5-5: This pin (BS1) is for 3-line SPI or 4-line SPI selection. When it is “Low”, 4-line SPI is selected. When it is “High”, 3-line SPI (9 bits SPI) is selected.

1.6 Reference Circuit

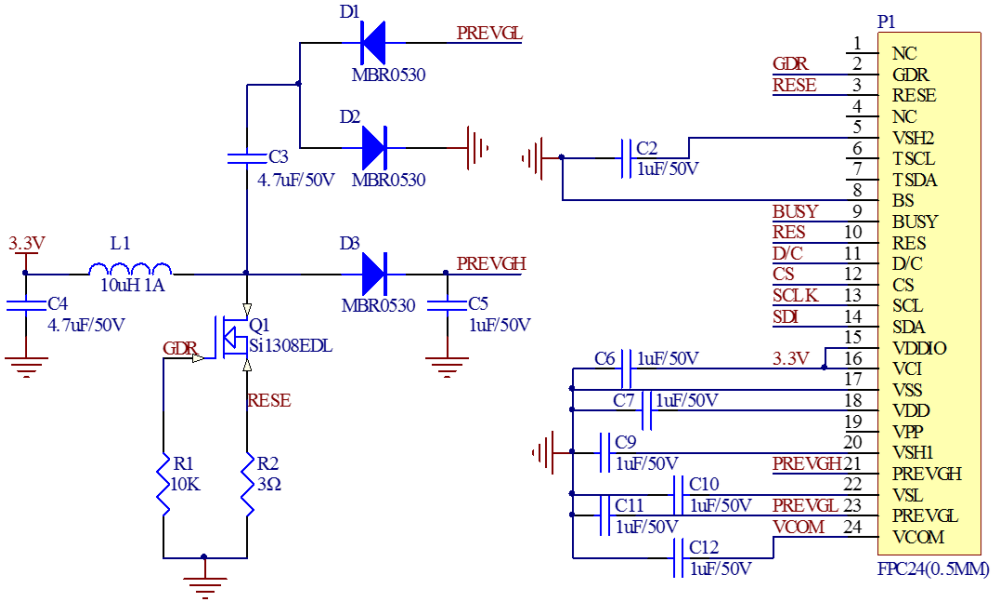

Note :

1. Inductor L1 is wire-wound inductor. There are no special requirements for other parameters.
2. Suggests using Si1304BDL or Si1308EDL TUBE MOS (Q1) , otherwise it may affect the normal boost of the circuit.
3. The default circuit is 4-wire SPI. If the user wants to use 3-wire SPI.
4. Default voltage value of all capacitors is 50V.

2. Environmental

2.1 HANDLING,SAFETYAND ENVIROMENTAL REQUIREMENTS

WARNING
The display glass may break when it is dropped or bumped on a hard surface. Handle with care. Should the display break, do not touch the electrophoretic material. In case of contact with electrophoretic material, wash with water and soap.

CAUTION
The display module should not be exposed to harmful gases, such as acid and alkali gases, which corrode electronic components.
Disassembling the display module can cause permanent damage and invalidate the warranty agreements.
IPA solvent can only be applied on active area and the back of a glass. For the rest part, it is not allowed.

Observe general precautions that are common to handling delicate electronic components. The glass can break and front surfaces can easily be damaged. Moreover the display is sensitive to static electricity and other rough environmental conditions.

Mounting Precautions	
(1) It`s recommended that you consider the mounting structure so that uneven force (ex. Twisted stress) is not applied to the module.	
(2) It`s recommended that you attach a transparent protective plate to the surface in order to protect the EPD. Transparent protective plate should have sufficient strength in order to resist external force.	
(3) You should adopt radiation structure to satisfy the temperature specification.	
(4) Acetic acid type and chlorine type materials for the cover case are not desirable because the former generates corrosive gas of attacking the PS at high temperature and the latter causes circuit break by electro-chemical reaction.	
(5) Do not touch, push or rub the exposed PS with glass, tweezers or anything harder than HB pencil lead. And please do not rub with dust clothes with chemical treatment. Do not touch the surface of PS for bare hand or greasy cloth. (Some cosmetics deteriorate the PS)	
(6) When the surface becomes dusty, please wipe gently with absorbent cotton or other soft materials like chamois soaks with petroleum benzene. Normal-hexane is recommended for cleaning the adhesives used to attach the PS. Do not use acetone, toluene and alcohol because they cause chemical damage to the PS.	
(7) Wipe off saliva or water drops as soon as possible. Their long time contact with PS causes deformations and color fading.	
Product specification	The data sheet contains final product specifications.

Limiting values
Limiting values given are in accordance with the Absolute Maximum Rating System (IEC 134). Stress above one or more of the limiting values may cause permanent damage to the device. These are stress ratings only and operation of the device at these or any other conditions above those given in the Characteristics sections of the specification is not implied. Exposure to limiting values for extended periods may affect device reliability.
Application information
Where application information is given, it is advisory and dose not form part of the specification.

Product Environmental certification
ROHS
REMARK
All The specifications listed in this document are guaranteed for module only. Post-assembled operation or component(s) may impact module performance or cause unexpected effect or damage and therefore listed specifications is not warranted after any Post-assembled operation.

2.2 Reliability test

	TEST	CONDITION	METHOD	REMARK
1	High-Temperature Operation	T=40 ℃ , RH=35%RH, For 240Hr	IEC 60 068-2-2Bb	
2	Low-Temperature Operation	T = 0℃ for 240 hrs	IEC 60 068-2-2Ab	
3	High-Temperature Storage	T=60 ℃ , RH=35% RH, For 240Hr Test in white pattern	IEC 60 068-2-2Bb	
4	Low-Temperature Storage	T = -25℃, for 240 hrs Test in white pattern	IEC 60 068-2-2Ab	
5	High Temperature, High-Humidity Operation	T=40 ℃, RH=80%RH, For 168Hr	IEC 60 068-2-3CA	
6	High Temperature, High-Humidity Storage	T=50 ℃, RH=80%RH, For 240Hr Test in white pattern	IEC 60 068-2-3CA	
7	Temperature Cycle	-25 ℃ (30min)~60 ℃ (30min), 50 Cycle Test in white pattern	IEC 60 068-2-14NB	
8	Package Vibration	1.04G,Frequency :10~500Hz Direction : X,Y,Z Duration:1hours in each direction	Full packed for shipment	
9	Package Drop Impact	Drop from height of 122 cm on Concrete surface Drop sequence:1 corner, 3edges, 6face One drop for each.	Full packed for shipment	
10	UV exposure Resistance	765 W/㎡for 168hrs,40℃	IEC 60068-2-5 Sa	
11	Electrostatic discharge	Machine model: +/-250V,0Ω,200pF	IEC61000-4-2	

Actual EMC level to be measured on customer application.

Note1: The protective film must be removed before temperature test.

Note2: Stay white pattern for storage and non-operation test.

Note3: Operation is black/white/red pattern, hold time is 150S.

Note4: The function, appearence, opticals should meet the requirements of the test before and after the test.

Note5: Keep testing after 2 hours placing at 20℃-25℃.

3. Electrical Characteristics

3.1 ABSOLUTE MAXIMUM RATING

Symbol	Parameter	Rating	Unit
VCI	Logic supply voltage	-0.5 to +4.0	V
TOPR	Operation temperature range	0~50	°C
TSTG	Storage temperature range	-25~60	°C
-	Humidity range	40~70	%RH

* Note: Avoid direct sunlight.

Table 3.1-1: Maximum Ratings

Note: Maximum ratings are those values beyond which damages to the device may occur.

Functional operation should be restricted to the limits in the Electrical Characteristics chapter.

Note 3.1-1:The recommended operating temperature should be kept below 50°C

Note 3.1-2: Tstg is the transportation condition, the transport time is within 10 days for -25℃~0℃or 30℃~60℃.

3.2 DC CHARACTERISTICS

The following specifications apply for: VSS=0V, VCI=3.3V, TOPR=25℃.

Table 3.2-1: DC Characteristics

Symbol	Parameter	Test Condition	Applicable pin	Min.	Typ.	Max.	Unit
VCI	VCI operation voltage	-	VCI	2.2	3.3	3.7	V
VIH	High level input voltage	-	SDA, SCL, CS#, D/C#, RES#, BS1	0.8VDDIO	-	-	V
VIL	Low level input voltage	-		-	-	0.2VDDIO	V
VOH	High level output voltage	IOH=-100uA	BUSY,	0.9VDDIO	-	-	V
VOL	Low level output voltage	IOL = 100uA			-	0.1VDDIO	V
Iupdate	Module operating current		-	-	1.5		mA
Isleep	Deep sleep mode	VCI=3.3V	-	-		2	uA

The Typical power consumption is measured using associated 25℃ waveform with following pattern transition: from horizontal scan pattern to vertical scan pattern. (Note 3.2-1)

- The listed electrical/optical characteristics are only guaranteed under the controller & waveform provided by GooDisplay.
- Vcom value will be OTP before in factory or present on the label sticker.

Note 3.2-1

The Typical power consumption

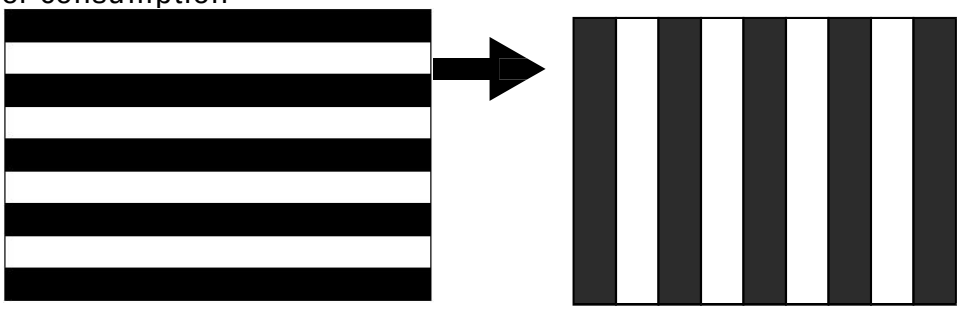

3.3 Serial Peripheral Interface Timing

The following specifications apply for: VSS=0V, VCI=2.2V to 3.7V, TOPR=25℃

Write mode

Symbol	Parameter	Min	Typ	Max	Unit
fSCL	SCL frequency (Write Mode)			20	MHz
tCSSU	Time CS# has to be low before the first rising edge of SCLK	20			ns
tCSHLD	Time CS# has to remain low after the last falling edge of SCLK	20			ns
tCSHIGH	Time CS# has to remain high between two transfers	100			ns
tSCLHIGH	Part of the clock period where SCL has to remain high	25			ns
tSCLLOW	Part of the clock period where SCL has to remain low	25			ns
tSISU	Time SI (SDA Write Mode) has to be stable before the next rising edge of SCL	10			ns
tSIHLD	Time SI (SDA Write Mode) has to remain stable after the rising edge of SCL	40			ns

Read mode

Symbol	Parameter	Min	Typ	Max	Unit
fSCL	SCL frequency (Read Mode)			2.5	MHz
tCSSU	Time CS# has to be low before the first rising edge of SCLK	100			ns
tCSHLD	Time CS# has to remain low after the last falling edge of SCLK	50			ns
tCSHIGH	Time CS# has to remain high between two transfers	250			ns
tSCLHIGH	Part of the clock period where SCL has to remain high	180			ns
tSCLLOW	Part of the clock period where SCL has to remain low	180			ns
tSOSU	Time SO(SDA Read Mode) will be stable before the next rising edge of SCL		50		ns
tSOHLD	Time SO (SDA Read Mode) will remain stable after the falling edge of SCL		0		ns

Note: All timings are based on 20% to 80% of VDDIO-VSS

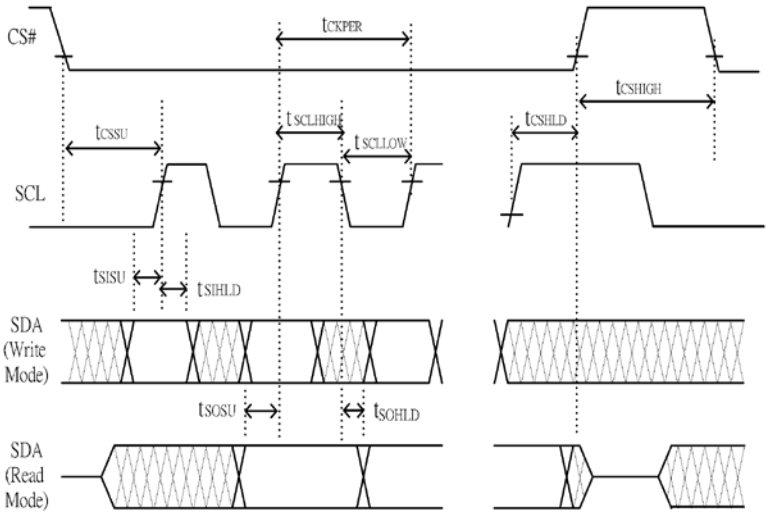

Figure 3.3-1 : Serial peripheral interface characteristics

3.4 Power Consumption

Parameter	Symbol	Conditions	TYP	Max	Unit	Remark
Panel power consumption during update	-	25℃	-	8	mAs	-
Deep sleep mode	-	25℃	-	2	uA	-

mAs=update average current×update time

3.5 MCU Interface

3.5-1) MCU interface selection

The 1.54inch e-Paper V2 can support 3-wire/4-wire serial peripheral interface.
In the Module, the MCU interface is pin selectable by BS1 pins shown in.

Table 3.5-1: MCU interface selection

BS1	MPU Interface
L	4-lines serial peripheral interface (SPI)
H	3-lines serial peripheral interface (SPI) - 9 bits SPI

3.5-2) MCU Serial Peripheral Interface (4-wire SPI)

The 4-wire SPI consists of serial clock SCL, serial data SDA, D/C# and CS#,The control pins status in 4-wire SPI in writing command/data is shown in Table 7- 2 and the write procedure 4-wire SPI is shown in Figue 7-2.

Table 3.5-2 : Control pins status of 4-wire SPI

Function	SCL pin	SDA pin	D/C# pin	CS# pin
Write command	↑	Command bit	L	L
Write data	↑	Data bit	H	L

Note:
(1) L is connected to VSS and H is connected to VDDIO
(2) ↑ stands for rising edge of signal

In the write mode, SDA is shifted into an 8-bit shift register on each rising edge of SCL in the order of D7, D6, ... D0. The level of D/C# should be kept over the whole byte. The data byte in the shift register is written to the Graphic Display Data RAM (RAM)/Data Byte register or command Byte register according to D/C# pin.

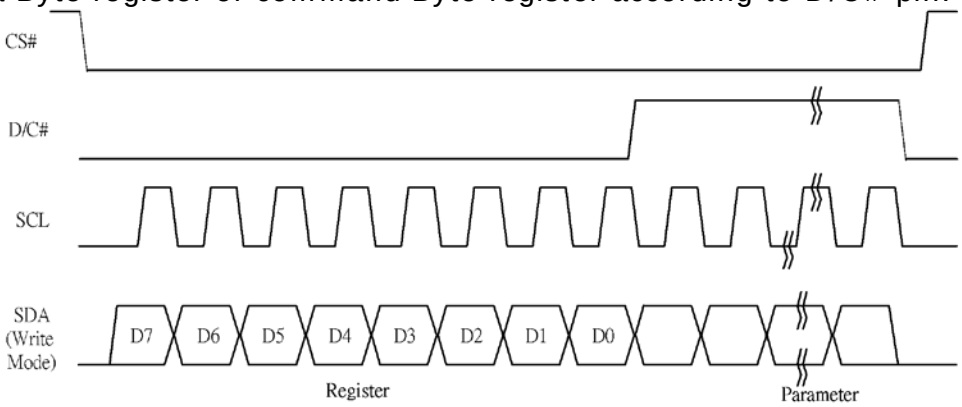

Figure 3.5-1: Write procedure in 4-wire SPI mode

In the Read mode:

1. After driving CS# to low, MCU need to define the register to be read.
2. SDA is shifted into an 8-bit shift register on each rising edge of SCL in the order of D7, D6, ... D0 with D/C# keep low.
3. After SCL change to low for the last bit of register, D/C# need to drive to high.
4. SDA is shifted out an 8-bit data on each falling edge of SCL in the order of D7, D6, ... D0.
5. Depending on register type, more than 1 byte can be read out. After all byte are read, CS# need to drive to high to stop the read operation.

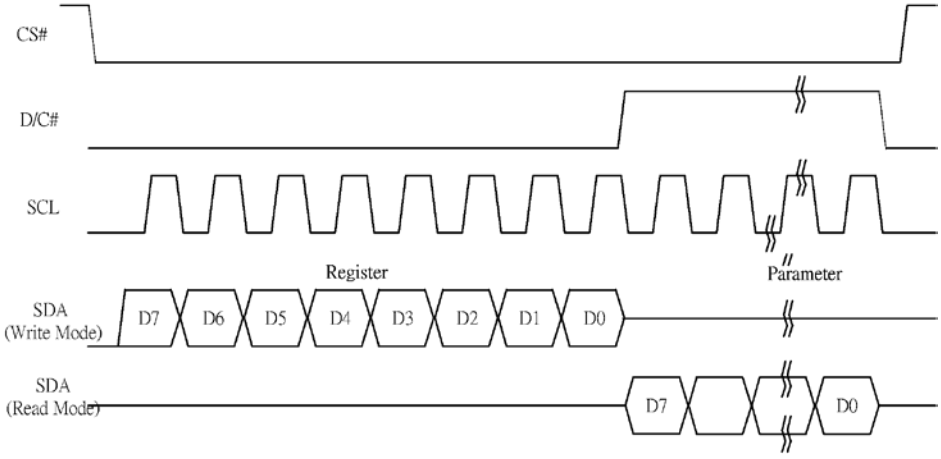

Figure 3.5-2: Read procedure in 4-wire SPI mode

3.5-3) MCU Serial Peripheral Interface (3-wire SPI)

The 3-wire SPI consists of serial clock SCL, serial data SDA and CS#. The operation is similar to 4-wire SPI while D/C# pin is not used and it must be tied to LOW. The control pins status in 3-wire SPI is shown in Table 3.5-3

Table 3.5-3 : Control pins status of 3-wire SPI

Function	SCL pin	SDA pin	D/C# pin	CS# pin
Write	↑	Command	Tie LOW	L
Write data	↑	Data bit	Tie LOW	L

Note:

(1)L is connected to V_{SS} and H is connected to V_{DDIO}

(2)↑ stands for rising edge of signal

In the write operation, a 9-bit data will be shifted into the shift register on each clock rising edge. The bit shifting sequence is D/C# bit, D7 bit, D6 bit to D0 bit. The first bit is D/C# bit which determines the following byte is command or data. When D/C# bit is 0, the following byte is command. When D/C# bit is 1, the following byte is data. shows the write procedure in 3-wire SPI

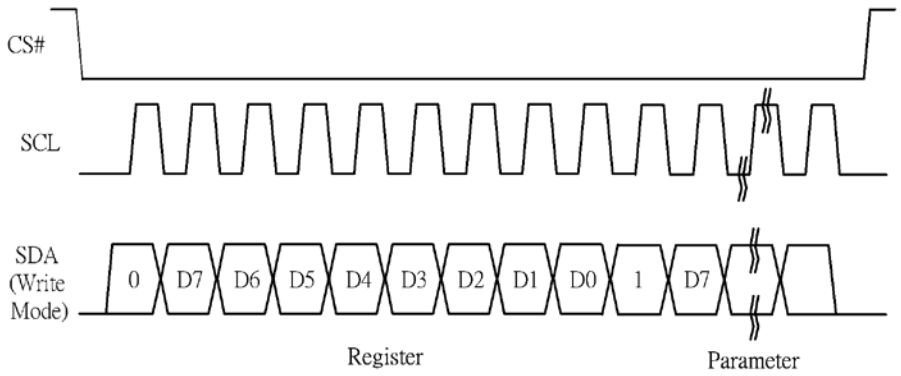

Figure 3.5-3: Write procedure in 3-wire SPI mode

In the Read mode:

1. After driving CS# to low, MCU need to define the register to be read.
2. D/C#=0 is shifted thru SDA with one rising edge of SCL
3. SDA is shifted into an 8-bit shift register on each rising edge of SCL in the order of D7, D6, ... D0.
4. D/C#=1 is shifted thru SDA with one rising edge of SCL
5. SDA is shifted out an 8-bit data on each falling edge of SCL in the order of D7, D6, … D0.
6. Depending on register type, more than 1 byte can be read out. After all byte are read, CS# need to drive to high to stop the read operation

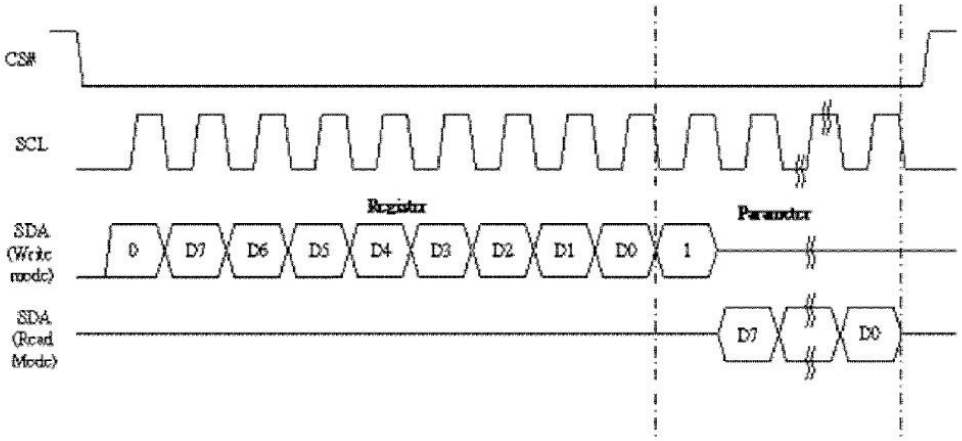

Figure 3.5-4: Read procedure in 3-wire SPI mode

3.6 Temperature sensor operation

Following is the way of how to sense the ambient temperature of the module. First, use an external temperature sensor to get the temperature value and converted it into HEX format with below mapping table, then send command 0x1A with the HEX temperature value to the module thru the SPI interface.

The temperature value to HEX conversion is as follow:

1. If the Temperature value MSByte bit D11 = 0, then

   The temperature is positive and value (DegC) = + (Temperature value) / 16

2. If the Temperature value MSByte bit D11 = 1, then

   The temperature is negative and value (DegC) = ~ (2's complement of Temperature value) / 16

12-bit binary (2's complement)	Hexadecimal Value	Decimal Value	Value [DegC]
0111 1111 0000	7F0	2032	127
0111 1110 1110	7EE	2030	126.875
0111 1110 0010	7E2	2018	126.125
0111 1101 0000	7D0	2000	125
0001 1001 0000	190	400	25
0000 0000 0010	002	2	0.125
0000 0000 0000	000	0	0
1111 1111 1110	FFE	-2	-0.125
1110 0111 0000	E70	-400	-25
1100 1001 0010	C92	-878	-54.875
1100 1001 0000	C90	-880	-55

4. Typical Operating Sequence

4.1 Normal Operation Flow

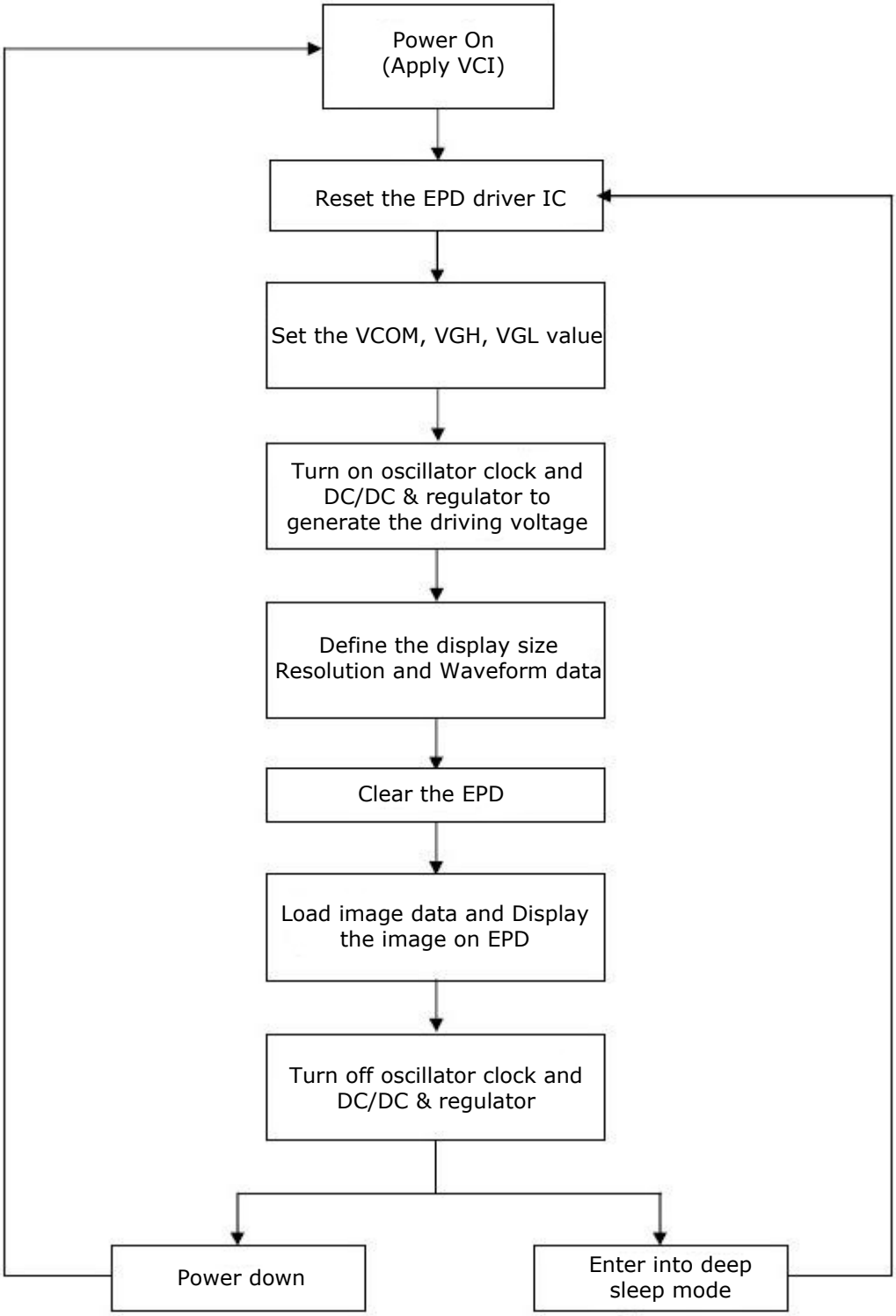

4.2 Reference Program Code

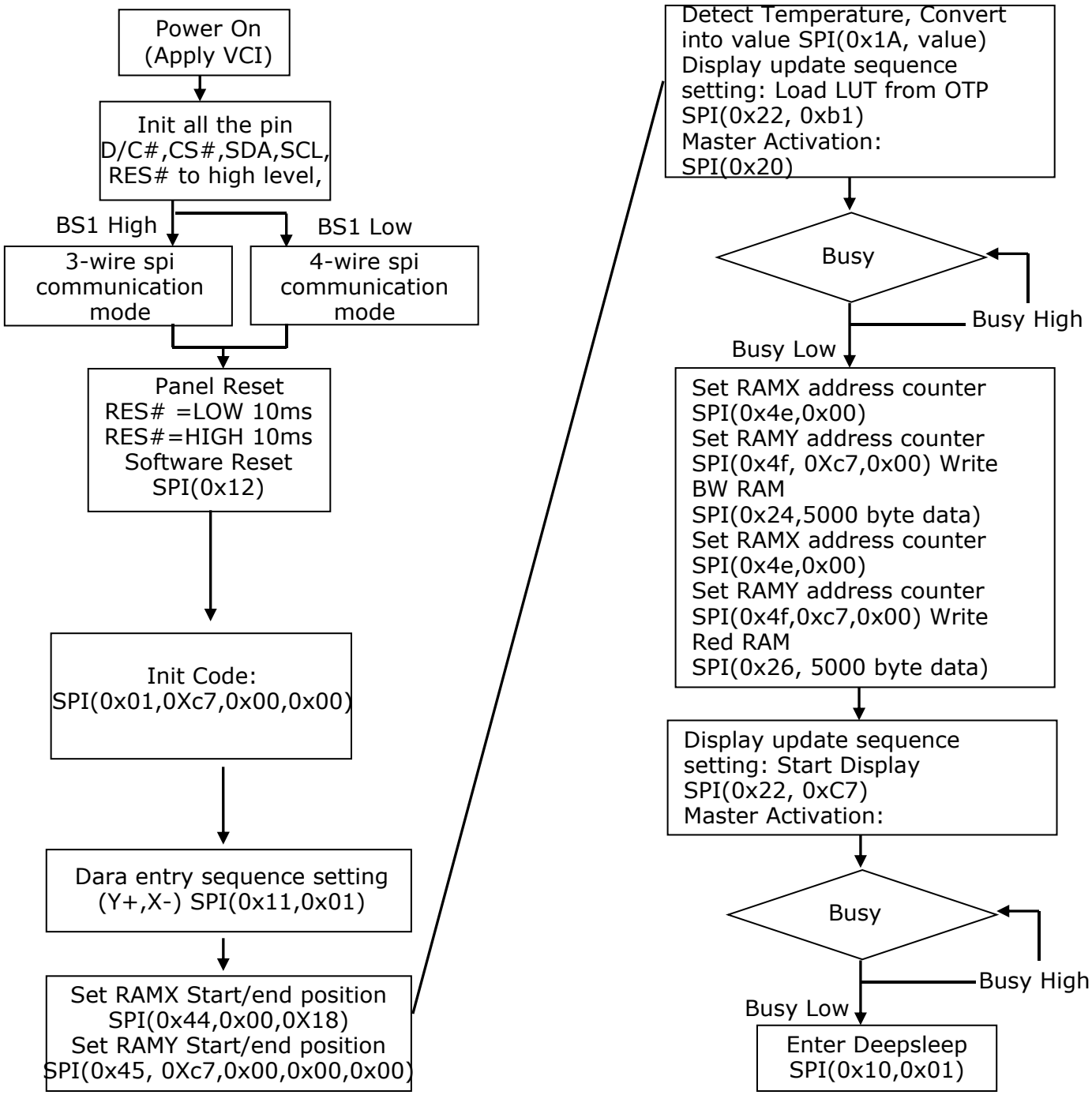

5. COMMAND TABLE

R/W#	D/C#	Hex	D7	D6	D5	D4	D3	D2	D1	D0	Command	Description
0	0	01	0	0	0	0	0	0	0	1	Driver Output control	Gate setting A[8:0]= C7h [POR], 200 MUX MUX Gate lines setting as (A[8:0] + 1). B[2:0] = 000 [POR]. Gate scanning sequence and direction B[2]: GD Selects the 1st output Gate GD=0 [POR], G0 is the 1st gate output channel, gate output sequence is G0,G1, G2, G3, ... GD=1, G1 is the 1st gate output channel, gate output sequence is G1, G0, G3, G2, ... B[1]: SM Change scanning order of gate driver. SM=0 [POR], G0, G1, G2, G3...G199 SM=1, G0, G2, G4 ...G198, G1, G3, ...G199 B[0]: TB TB = 0 [POR], scan from G0 to G199 TB = 1, scan from G199 to G0.
0	1		A7	A6	A5	A4	A3	A2	A1	A0		
0	0		0	0	0	0	0	0	0	A8		
0	0		0	0	0	0	0	B2	B1	B0		
0	0	03	0	0	0	0	0	0	1	1	Gate Driving voltage Control	Set Gate driving voltage A[4:0] = 00h [POR] VGH setting for 20V = 00h [POR] and 17h
0	1		0	0	0	A4	A3	A2	A1	A0		
0	0	04	0	0	0	0	0	1	0	0	Source Driving voltage Control	Set Source driving voltage A[7:0] = 41h [POR], VSH1 at 15V B[7:0] = A8h [POR], VSH2 at 5V. C[7:0] = 32h [POR], VSL at -15V Remark: VSH1>=VSH2
0	1		A7	A6	A5	A4	A3	A2	A1	A0		
0	1		B7	B6	B5	B4	B3	B2	B1	B0		
0	1		C7	C6	C5	C4	C3	C2	C1	C0		
0	0	10	0	0	0	1	0	0	0	0	Deep Sleep mode	Deep Sleep mode Control: A[1:0] : Description 00 Normal Mode [POR] 01 Enter Deep Sleep Mode 1 After this command initiated, the chip will enter Deep Sleep Mode, BUSY pad will keep output high. Remark: To Exit Deep Sleep mode, User required to send HWRESET to the driver
0	1		0	0	0	0	0	0	A1	A0		
0	0	11	0	0	0	1	0	0	0	1	Data Entry mode setting	Define data entry sequence A[2:0] = 011 [POR] A [1:0] = ID[1:0] Address automatic increment / decrement setting The setting of incrementing or decrementing of the address counter can be made independently in each upper and lower bit of the address. 00 –Y decrement, X decrement, 01 –Y decrement, X increment, 10 –Y increment, X decrement, 11 –Y increment, X increment [POR] A[2] = AM Set the direction in which the address counter is updated automatically after data are written to the RAM. AM= 0, the address counter is updated in the X direction. [POR] AM = 1, the address counter is updated in the Y direction.
0	1		0	0	0	0	0	A2	A1	A0		

R/W#	D/C#	Hex	D7	D6	D5	D4	D3	D2	D1	D0	Command	Description
0	0	12	0	0	0	1	0	0	1	0	SW RESET	It resets the commands and parameters to their S/W Reset default values except R10h-Deep Sleep Mode During operation, BUSY pad will output high. Note: RAM are unaffected by this command.
0	0	20	0	0	1	0	0	0	0	0	Master Activation	Activate Display Update Sequence The Display Update Sequence Option is located at R22h. BUSY pad will output high during operation. User should not interrupt this operation to avoid corruption of panel images.
0	0	21	0	0	1	1	0	0	0	1	Display Update Control 1	RAM content option for Display Update A[7:0] = 00h [POR] B[7:0] = 00h [POR] A[7:4] Red RAM option
0	1		A7	A6	A5	A4	A3	A2	A1	A0		
0	1		B7	0	0	0	0	0	0	0		

0000	Normal
0100	Bypass RAM content as 0
1000	Inverse RAM content

A[3:0] BW RAM option

0000	Normal
0100	Bypass RAM content as 0
1000	Inverse RAM content

0	0	22	0	0	1	0	0	0	1	0	Display Update Control 2	Display Update Sequence Option: Enable the stage for Master Activation A[7:0]= FFh (POR)
0	1		A7	A6	A5	A4	A3	A2	A1	A0		

Operating sequence	Parameter (in Hex)
Enable clock signal	80
Disable clock signal	01
Enable clock signal →Enable Analog	C0
Disable Analog →Disable clock signal	03
Enable clock signal →Load LUT with DISPLAY Mode 1 →Disable clock signal	91
Enable clock signal →Load LUT with DISPLAY Mode 2 →Disable clock signal	99
Enable clock signal →Load temperature value →Load LUT with DISPLAY Mode 1 →Disable clock signal	B1
Enable clock signal →Load temperature value →Load LUT with DISPLAY Mode 2 →Disable clock signal	B9
Enable clock signal →Enable Analog →Display with DISPLAY Mode 1 →Disable Analog →Disable OSC	C7
Enable clock signal →Enable Analog →Display with DISPLAY Mode 2 →Disable Analog →Disable OSC	CF

												Enable clock signal →Enable Analog →Load temperature value →DISPLAY with DISPLAY Mode 1 →Disable Analog →Disable OSC F7
												Enable clock signal →Enable Analog →Load temperature value →DISPLAY with DISPLAY Mode 2 →Disable Analog →Disable OSC FF
0	0	24	0	0	1	0	0	1	0	0	Write RAM (Black White) / RAM 0x24	After this command, data entries will be written into the BW RAM until another command is written. Address pointers will advance accordingly For Write pixel: Content of Write RAM(BW) = 1 For Black pixel: Content of Write RAM(BW) = 0
0	0	26	0	0	1	0	0	1	1	0	Write RAM (RED) / RAM 0x26	After this command, data entries will be written into the RED RAM until another command is written. Address pointers will advance accordingly. For Red pixel: Content of Write RAM(RED) = 1 For non-Red pixel [Black or White]: Content of Write RAM(RED) = 0
0	0	28	0	0	1	0	1	0	0	0	VCOM Sense	Enter VCOM sensing conditions and hold for duration defined in 29h before reading VCOM value. The sensed VCOM voltage is stored in register The command required CLKEN=1 and ANALOGEN=1 Refer to Register 0x22 for detail. BUSY pad will output high during operation.
0	0	29	0	0	1	0	1	0	0	1	VCOM Sense Duration	Stabling time between entering VCOM sensing mode and reading acquired. A[3:0] = 9h, duration = 10s. VCOM sense duration = (A[3:0]+1) sec
0	1		0	1	0	0	A3	A2	A1	A0		
0	0	2A	0	0	1	0	1	0	1	1	Program VCOM OTP	Program VCOM register into OTP The command required CLKEN=1. Refer to Register 0x22 for detail. BUSY pad will output high during operation.
0	0	2B	0	0	1	0	1	0	1	1	Write Register for VCOM Control	This command is used to reduce glitch when ACVCOM toggle. Two data bytes D04h and D63h should be set for this command.
0	1		0	0	0	0	0	1	0	0		
0	1		0	1	1	0	0	0	1	1		
0	0	2c	0	0	1	0	1	1	0	0	Write VCOM register	Write VCOM register from MCU interface A[7:0] = 00h [POR]
0	1		A7	A6	A5	A4	A3	A2	A1	A0		

R/W#	D/C#	Hex	D7	D6	D5	D4	D3	D2	D1	D0	Command	Description
0	0	2D	0	0	1	0	1	1	0	1	OTP Register Read for Display Option	Read Register for Display Option: A[7:0]: VCOM OTP Selection (Command 0x37, Byte A) B[7:0]: VCOM Register (Command 0x2C) C[7:0]~G[7:0]: Display Mode (Command 0x37, Byte B to Byte F) [5 bytes] H[7:0]~K[7:0]: Waveform Version (Command 0x37, Byte G to Byte J) [4 bytes]
1	1		A7	A6	A5	A4	A3	A2	A1	A0		
1	1		B7	B6	B5	B4	B3	B2	B1	B0		
1	1		C7	C6	C5	C4	C3	C2	C1	C0		
1	1		D7	D6	D5	D4	D3	D2	D1	D0		
1	1		E7	E6	E5	E4	E3	E2	E1	E0		
1	1		F7	F6	F5	F4	F3	F2	F1	F0		
1	1		G7	G6	G5	G4	G3	G2	G1	G0		
1	1		H7	H6	H5	H4	H3	H2	H1	H0		
1	1		I7	I6	I5	I4	I3	I2	I1	I0		
1	1		J7	J6	J5	J4	J3	J2	J1	J0		
1	1		K7	K6	K5	K4	K3	K2	K1	K0		
0	0	2E	0	0	1	0	1	1	1	0	User ID Read	Read 10 Byte User ID stored in OTP: A[7:0]]~J[7:0]: UserID (R38, Byte A and Byte J) [10 bytes]
1	1		A7	A6	A5	A4	A3	A2	A1	A0		
1	1		B7	B6	B5	B4	B3	B2	B1	B0		
1	1		C7	C6	C5	C4	C3	C2	C1	C0		
1	1		D7	D6	D5	D4	D3	D2	D1	D0		
1	1		E7	E6	E5	E4	E3	E2	E1	E0		
1	1		F7	F6	F5	F4	F3	F2	F1	F0		
1	1		G7	G6	G5	G4	G3	G2	G1	G0		
1	1		H7	H6	H5	H4	H3	H2	H1	H0		
1	1		I7	I6	I5	I4	I3	I2	I1	I0		
1	1		J7	J6	J5	J4	J3	J2	J1	J0		
0	0	30	0	0	1	1	0	0	0	0	Program WS OTP	Program OTP of Waveform Setting The contents should be written into RAM before sending this command. The command required CLKEN=1. Refer to Register 0x22 for detail. BUSY pad will output high during operation.
0	0	31	0	0	1	1	0	0	0	1	Load WS OTP	Load OTP of Waveform Setting The command required CLKEN=1. Refer to Register 0x22 for detail. BUSY pad will output high during operation.
0	0	32	0	0	1	1	0	0	1	0	Write LUT register	Write LUT register from MCU interface [153 bytes], which contains the content of VS[nX-LUTm], TP[nX], RP[n], SR[nXY], FR[n] and XON[nXY] Refer to Session 6.7 WAVEFORM SETTING
0	1		A7	A6	A5	A4	A3	A2	A1	A0		
0	1		B7	B6	B5	B4	B3	B2	B1	B0		
0	1		:	:	:	:	:	:	:	:		
0	1		.	..	.	.	.	.	.	.		
0	0	36	0	0	1	1	0	1	1	0	Program OTP selection	Program OTP Selection according to the OTP Selection Control [R37h and R38h] The command required CLKEN=1. Refer to Register 0x22 for detail. BUSY pad will output high during operation.

R/W#	D/C#	Hex	D7	D6	D5	D4	D3	D2	D1	D0	Command	Description
0	0	38	0	0	1	1	1	0	0	0	Write Register for User ID	Write Register for User ID A[7:0]]~J[7:0]: UserID [10 bytes] Remarks: A[7:0]~J[7:0] can be stored in OTP
0	1		A7	A6	A5	A4	A3	A2	A1	A0		
0	1		B7	B6	B5	B4	B3	B2	B1	B0		
0	1		C7	C6	C5	C4	C3	C2	C1	C0		
0	1		D7	D6	D5	D4	D3	D2	D1	D0		
0	1		E7	E6	E5	E4	E3	E2	E1	E0		
0	1		F7	F6	F5	F4	F3	F2	F1	F0		
0	1		G7	G6	G5	G4	G3	G2	G1	G0		
0	1		H7	H6	H5	H4	H3	H2	H1	H0		
0	1		I7	I6	I5	I4	I3	I2	I1	I0		
0	1		J7	J6	J5	J4	J3	J2	J1	J0		
0	0	39	0	0	1	1	1	0	0	1	OTP program mode	OTP program mode A[1:0] = 00: Normal Mode [POR] A[1:0] = 11: Internal generated OTP programming voltage Remark: User is required to EXACTLY follow the reference code sequences
0	1		0	0	0	0	0	0	A1	A0		
0	0	44	0	1	0	0	0	1	0	0	Set RAM X-address Start / End position	Specify the start/end positions of the window address in the X direction by an address unit for RAM A[5:0]: XSA[5:0], XStart, POR = 00h B[5:0]: XEA[5:0], XEnd, POR = 15h
0	1		0	0	A5	A4	A3	A2	A1	A0		
0	1		0	0	B5	B4	B3	B2	B1	B0		
0	0	45	0	1	0	0	0	1	0	1	Set Ram Y-address Start / End position	Specify the start/end positions of the window address in the Y direction by an address unit for RAM A[8:0]: YSA[8:0], YStart, POR = 000h B[8:0]: YEA[8:0], YEnd, POR = 127h
0	1		A7	A6	A5	A4	A3	A2	A1	A0		
0	1		0	0	0	0	0	0	0	A8		
0	1		B7	B6	B5	B4	B3	B2	B1	B0		
0	1		0	0	0	0	0	0	0	B8		
0	0	4E	0	1	0	0	1	1	1	0	Set RAM X address counter	Make initial settings for the RAM X address in the address counter (AC) A[5:0]: 00h [POR].
0	1		0	0	A5	A4	A3	A2	A1	A0		
0	0	4F	0	1	0	0	1	1	1	1	Set RAM Y address counter	Make initial settings for the RAM Y address in the address counter (AC) A[8:0]: 000h [POR].
0	1		A7	A6	A5	A4	A3	A2	A1	A0		
0	1		0	0	0	0	0	0	0	A8		

6. Optical characteristics

6.1 Specifications

Measurements are made with that the illumination is under an angle of 45 degrees, the detection is perpendicular unless otherwise specified.

T=25℃

SYMBOL	PARAMETER	CONDITIONS	MIN	TYPE	MAX	UNIT	Note
R	Reflectance	White	30	35	-	%	Note 6-1
Gn	2Grey Level	-	-	DS+(WS-DS)×n(m-1)	-	L*	-
CR	Contrast Ratio	indoor	-	10	-	-	-
Panel's life	-	0℃～50℃		5years	-	-	Note 6-2

M:2

WS：White state, DS：Dark stat

Note 6-1：Luminance meter：Eye - One Pro Spectrophotometer

Note 6-2: We don't guarantee 5 years pixels display quality for humidity below 45%RH or above 70%RH; at least update 1 time per day.

6.2 Definition of contrast ratio

The contrast ratio (CR) is the ratio between the reflectance in a full white area (R1) and the reflectance in a dark area (Rd)() :

R1: white reflectance Rd: dark reflectance

CR = R1/Rd

6.3 Reflection Ratio

The reflection ratio is expressed as :

R = Reflectance Factor $_{\text{white board}}$ x (L_{center} / $L_{\text{white board}}$)

L_{center} is the luminance measured at center in a white area (R=G =B=1) . $L_{\text{white board}}$ is the luminance of a standard white board . Both are measured with equivalent illumination source . The viewing angle shall be no more than 2 degrees .

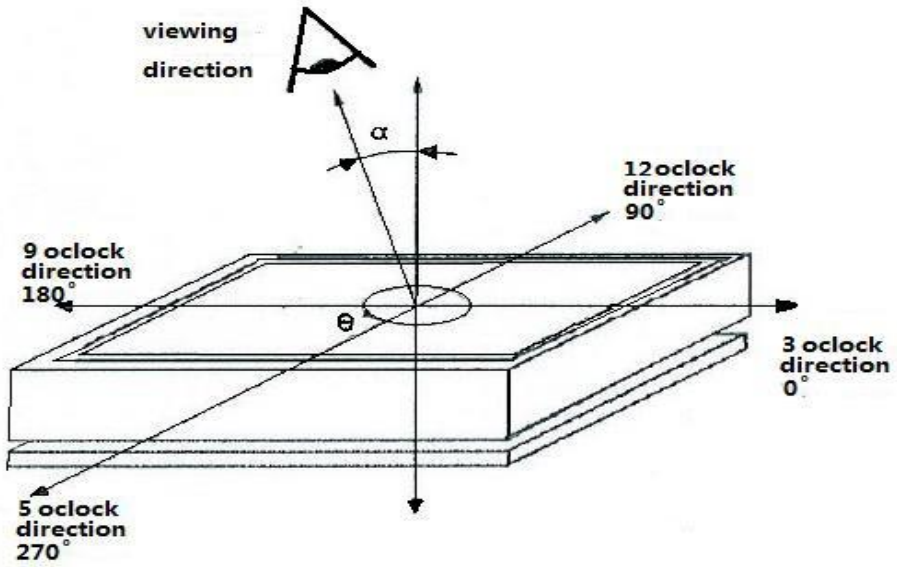

7. Point and line standard

Shipment Inspection Standard						
Equipment：Electrical test fixture, Point gauge						
Outline dimension	37.32(H)×31.8(V)×1.05(D)	Unit：㎜	Part-A	Active area	Part-B	Border area
Environment	Temperature	Humidity	Illuminance	Distance	Time	Angle
	19℃～25℃	55% ±5%RH	800～1300Lux	300 ㎜	35Sec	
Defet type	Inspection method	Standard		Part-A		Part-B
Spot	Electric Display	D≤0.25 ㎜		Ignore		Ignore
		0.25 ㎜＜D≤0.4 ㎜		N≤4		Ignore
		D＞0.4 ㎜		Not Allow		Ignore
Display unwork	Electric Display	Not Allow		Not Allow		Ignore
Display error	Electric Display	Not Allow		Not Allow		Ignore
Scratch or line defect(include dirt)	Visual/Film card	L≤2 ㎜，W≤0.2 ㎜		Ignore		Ignore
		2.0mm＜L≤5.0mm，0.2＜W≤0.3mm,		N≤2		Ignore
		L＞5 ㎜，W＞0.3 ㎜		Not Allow		Ignore
PS Bubble	Visual/Film card	D≤0.2mm		Ignore		Ignore
		0.2mm≤D≤0.35mm & N≤4		N≤4		Ignore
		D＞0.35 mm		Not Allow		Ignore
Side Fragment	Visual/Film card	X≤5mm，Y≤0.5mm, Do not affect the electrode circuit , Ignore				
		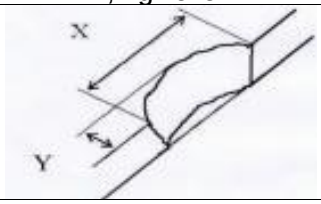				
Remark	1.Cannot be defect & failure cause by appearance defect；					
	2.Cannot be larger size cause by appearance defect；					
	L=long W=wide D=point size N=Defects NO					

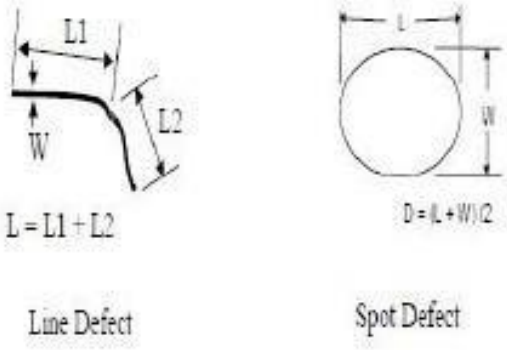

L=long W=wideD=pointsize

8. Packing

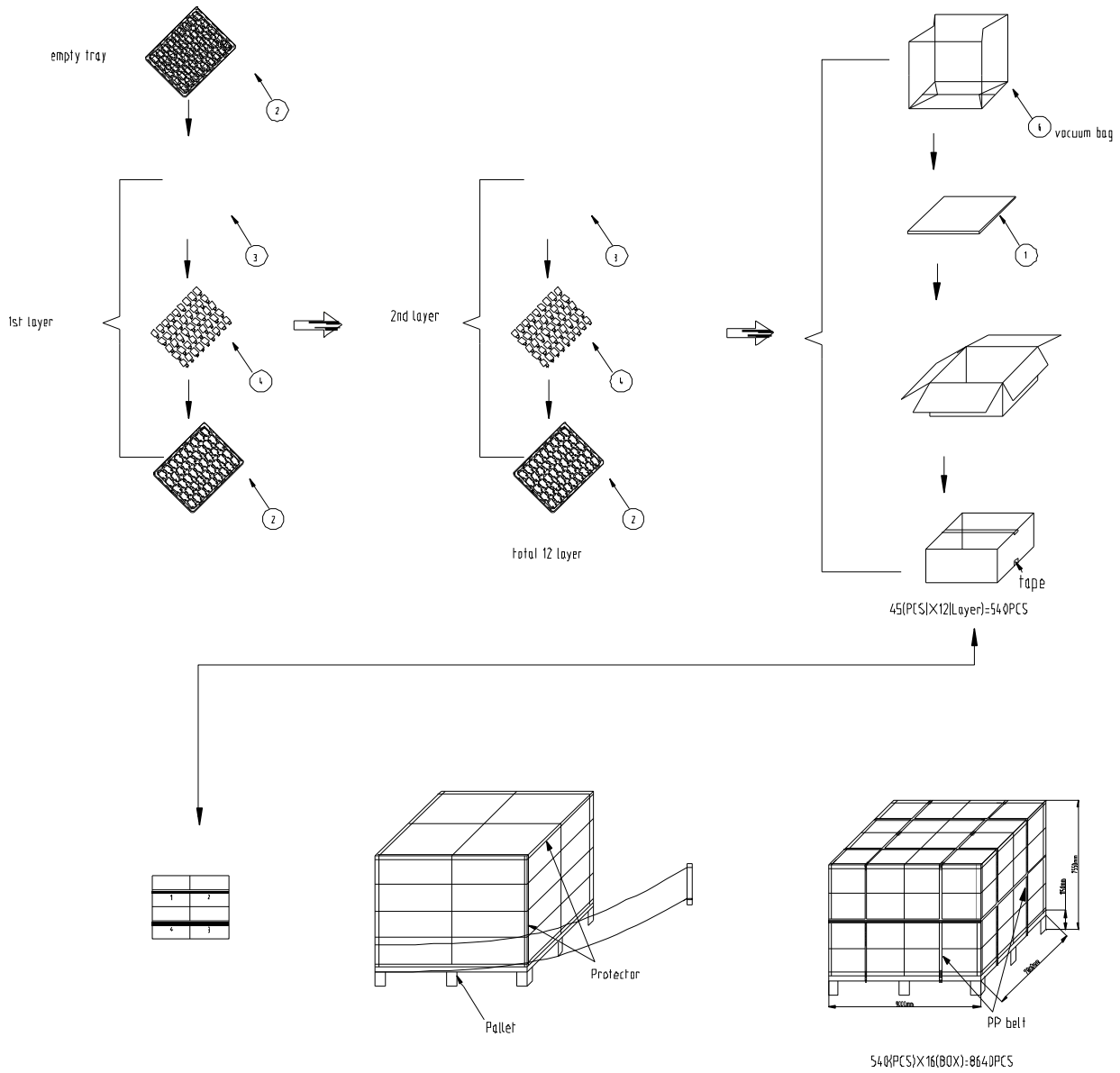
empty tray
1st layer
2nd layer
total 12 layer
vacuum bag
tape
45(PCS)X12(Layer)=540PCS
Protector
Pallet
PP belt
540(PCS)X16(BOX)=8640PCS

9. Precautions

(1) Do not apply pressure to the EPD panel in order to prevent damaging it.

(2) Do not connect or disconnect the interface connector while the EPD panel is in operation.

(3) Do not touch IC bonding area. It may scratch TFT lead or damage IC function.

(4) Please be mindful of moisture to avoid its penetration into the EPD panel, which may cause damage during operation.

(5) If the EPD Panel / Module is not refreshed every 24 hours, a phenomena known as “Ghosting” or “Image Sticking” may occur. It is recommended to refreshed the ESL / EPD Tag every 24 hours in use case. It is recommended that customer ships or stores the ESL / EPD Tag with a completely white image to avoid this issue

(6) High temperature, high humidity, sunlight or fluorescent light may degrade the EPD panel’s performance. Please do not expose the unprotected EPD panel to high temperature, high humidity, sunlight, or fluorescent for long periods of time.