ALS30/31 Series, +85°C

Electronic Components KEMET CHARGED.

Overview

KEMET's ALS30/31 Series of screw terminal capacitors covers a wide range of case sizes and voltage ratings featuring high ripple currents and long-life performance. They are ideally suited for industrial and commercial applications demanding high reliability and long-life expectancy such as frequency converters, uninterruptible power supply (UPS) systems and switch mode power supplies (SMPS).

Applications

Typical applications for KEMET's ALS30/31 Series of capacitors include smoothing, energy storage or pulse operation in telecommunication demanding power supplies, process control, AC motor control, traction, welding, and measuring.

Benefits

- Compact size
- Long life, up to 20,000 hours at +85°C (V_R, I_R applied)
- High ripple current
- Excellent surge voltage capability
- Optimized designs available upon request

Click image above for interactive 3D content

Open PDF in Adobe Reader for full functionality

Part Number System

ALS3	0	A	153	DA	025	
Series	Stud Option	Termination	Capacitance Code (µF)	Size Code	Rated Voltage (VDC)	
Screw Terminal Aluminum Electrolytic	0 = Plain Can 1 = Threaded mounting stud	See Termination Table	First two digits represent significant figures. Third digit specifies number of zeros.	See Dimension Table	025 = 25 040 = 40 063 = 63 100 = 100 200 = 200 250 = 250	350 = 350 400 = 400 415 = 415 450 = 450 500 = 500

© KEMET Electronics Corporation • P.O. Box 5928 • Greenville, SC 29606 • 864-963-6300 • www.kemet.com

sales@prom-elec.com / ООО ПРОМЭЛЕКТРОНИКА

Performance Characteristics

Item	Performance Characteristics		
Capacitance Range	100 – 680,000 µF		
Rated Voltage	25 – 500 VDC		
Operating Temperature	-40 to +85°C		
Storage Temperature Range	-55 to +85°C		
Capacitance Tolerance	±20% at 100 Hz/+20°C		
Operational Lifetime	D (mm)	Rated Voltage and Ripple Current at +85°C (hours)	Rated Voltage at +85°C (hours)
	36	11,000	22,000
	51	18,000	36,000
	63.5, 66	19,000	38,000
	77, 90	20,000	40,000
End of Life Requirement	Δ C/C < ±10%, ESR < 2 x initial ESR value, IL < initial specified limit		
Shelf Life	2,000 hours at +85°C or 30,000 hours at +40°C 0 VDC		
Leakage Current	I = 0.003 CV or 6,000 (µA, whichever is smaller)		
	C = rated capacitance (µF), V = rated voltage (VDC). Voltage applied for 5 minutes at +20°C.		
Vibration Test Specifications		Procedure	Requirements
	Case Length < 220 mm	0.75 mm displacement amplitude or 10 g maximum acceleration. Vibration applied for three 2-hour sessions at 10 – 55 Hz (Capacitor clamped by body).	No leakage of electrolyte or other visible damage. Deviations in capacitance and tanδ from initial measurements must not exceed: Δ C/C < 5%
	Case Length ≥ 220 mm	0.35 mm displacement amplitude or 5 g maximum acceleration. Vibration applied for three 0.5 hour sessions at 10 – 55 Hz (Capacitor clamped by body).	
Standards	IEC 60384–4 long life grade 40/85/56		

Surge Voltage

Test Condition	Voltage (VDC)									
	25	40	63	100	200	250	350	400	450	500
≤ 30s Surge followed by a no load period of 330s, 1,000 cycles at +85°C	28.75	46	72.5	115	230	288	385	440	495	550
≤ 500 ms surge, 100 cycles at 20°C, occurring randomly throughout the life of the capacitor					350	400	500	520	550	600

Test Method & Performance

Endurance Life Test		
Conditions	Performance	
Temperature	+85°C	
Test Duration	5,000 hours	
Ripple Current	Rated ripple current specified in table	
Voltage	The sum of DC voltage and the peak AC voltage must not exceed the rated voltage of the capacitor	
Performance	**The following specifications will be satisfied when the capacitor is tested at +20°C:**	
Capacitance Change	≤ 160 V	Within 15% of the initial value
	> 160 V	Within 10% of the initial value
Equivalent Series Resistance	Does not exceed 200% of the initial value	
Leakage Current	Does not exceed leakage current limit	

Dimensions – Millimeters

Size Code	Dimensions in mm						Mounting Clip	Approximate Weight Grams
	D	L	LT	S	V	Mounting Stud (M x H)		
	±1	±2	±1	±0.5	Nominal	±1		
DA	36	52	58.5	12.8	8	M8 x 12	V3/H2/2736	75
DB	36	62	67.5	12.8	8	M8 x 12	V3/H2/2736	90
DE	36	82	87.5	12.8	8	M8 x 12	V3/H2/2736	115
DF	36	105	111.5	12.8	8	M8 x 12	V3/H2/2736	140
KE	51	82	86.5	22.2	13.7	M12 x 16	V4/2737	220
KF	51	105	110.5	22.2	13.7	M12 x 16	V4/2737	300
LF	63.5	105	110.5	28.5	15.8	M12 x 16	V8	485
MF	66	105	110.5	28.5	15.8	M12 x 16	V10/2738	505
MJ	66	115	119	28.5	15.8	M12 x 16	V10/2738	540
ND	77	75	79.5	31.8	19	M12 x 16	V11	495
NF	77	105	110.5	31.8	19	M12 x 16	V11	690
NJ	77	115	119	31.8	19	M12 x 16	V11	766
NP	77	146	150.5	31.8	19	M12 x 16	V11	960
NT	77	220	224.5	31.8	19	M12 x 16	V11	1450
QC	90	67	71.5	31.8	25	M12 x 16	V90	615
QD	90	75	79.5	31.8	25	M12 x 16	V90	690
QH	90	98	103.5	31.8	25	M12 x 16	V90	900
QP	90	146	149.5	31.8	25	M12 x 16	V90	1345
QT	90	220	223.5	31.8	25	M12 x 16	V90	2000

Note: Dimensions include sleeving. LT listed is for A-type termination code. Information for other termination codes is available upon request.

Termination Tables

Termination Code	A	C	G
Diameter (mm)			
36	•		
51	•		
66	•	•	
77	•	•	•
90	•	•	

Termination Code	Thread	Termination Style	T	DT	Thread Depth (TD)	Z
			± 0.5	± 0.5	Minimum	Nominal
Standard Termination Option						
A (D = 36)	M5	Round	7.14	8	10	
A (D > 36)	M5	Oval	5.5	13	10	10
Other Termination Options						
C	M6	Round	5.5	13	10	
G	M6	Round	6.35	17	11.8	
Dimensions in mm						

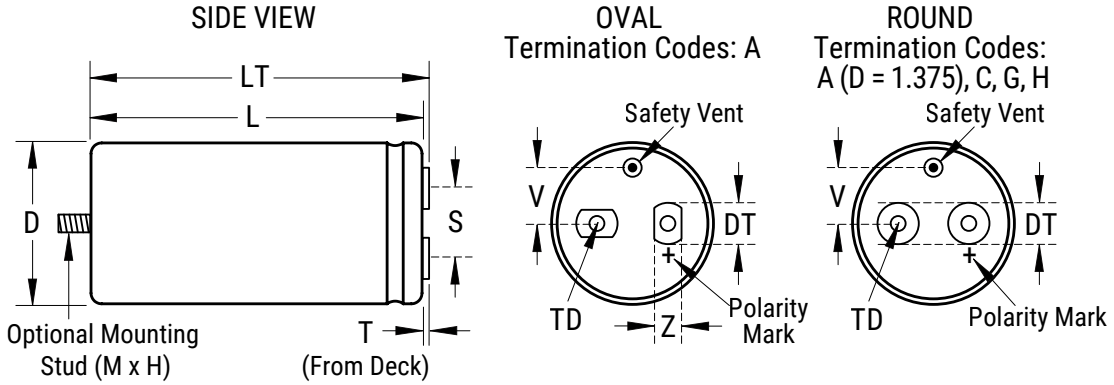

Case Polarity

Due to the presence of electrolyte in the capacitor, the aluminum can and stud mounting will essentially be at the same polarity as the negative terminal. We recommend that the stud and can be insulated (see accessories for insulating nuts).

Terminations

Aluminum inserts with M5 threads as standard, maximum torque 2NM. Optional M6 threaded inserts have a maximum torque 4NM. Maximum torque for stud mounting M8:4NM and M12:8NM.

Shelf Life

The capacitance, ESR and impedance of a capacitor will not change significantly after extended storage periods, however the leakage current will very slowly increase. KEMET products are particularly stable and allow a shelf life in excess of three years at 40°C. See sectional specification under each product series for specific data.

Re-age (Reforming) Procedure

Apply the rated voltage to the capacitor at room temperature for a period of one hour, or until the leakage current has fallen to a steady value below the specified limit. During re-aging a maximum charging current of twice the specified leakage current or 5 mA (whichever is greater) is suggested.

Reliability

The reliability of a component can be defined as the probability that it will perform satisfactorily under a given set of conditions for a given length of time.

In practice, it is impossible to predict with absolute certainty how any individual component will perform; thus, we must utilize probability theory. It is also necessary to clearly define the level of stress involved (e.g. operating voltage, ripple current, temperature and time). Finally, the meaning of satisfactory performance must be defined by specifying a set of conditions which determine the end of life of the component.

Reliability as a function of time, R(t), is normally expressed as: $R(t)=e^{-\lambda t}$
where R(t) is the probability that the component will perform satisfactorily for time t, and λ is the failure rate.

Failure Rate

The failure rate is the number of components failing per unit time. The failure rate of most electronic components follows the characteristic pattern:

- Early failures are removed during the manufacturing process.
- The operational life is characterized by a constant failure rate.
- The wear out period is characterized by a rapidly increasing failure rate.

The failures in time (FIT) are given with a 60% confidence level for the various type codes. By convention, FIT is expressed as 1×10^{-9} failures per hour. Failure rate is also expressed as a percentage of failures per 1,000 hours.
e.g., 100 FIT = 1×10^{-7} failures per hour = 0.01%/1,000 hours

End of Life Definition
Catastrophic Failure: short circuit, open circuit or safety vent operation
Parametric Failure:

- Change in capacitance > ±10%
- Leakage current > specified limit
- ESR > 2 x initial ESR value

MTBF

The mean time between failures (MTBF) is simply the inverse of the failure rate.
MTBF= 1/λ

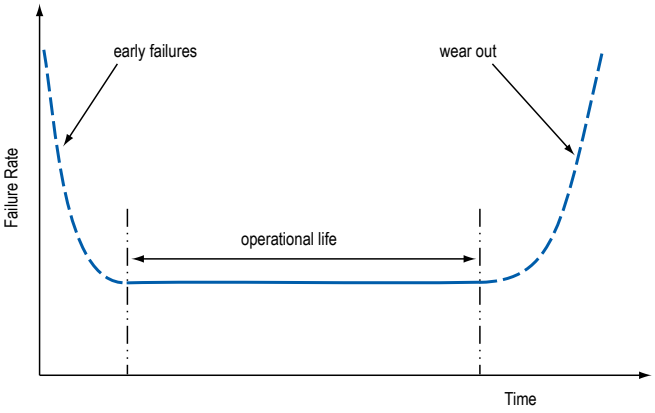

The failure rate is derived from our periodic test results. The failure rate (λ_R) is, therefore, only given at test temperature for life tests. An estimation is also given at 40°C. The expected failure rate for this capacitor range is based on our periodic test results for capacitors with structural similarity. Failure rate is frequently quoted in FIT (Failures In Time) where 1 FIT = 1 x 10^{-9} failures per hour. Failure rate per hour includes both catastrophic and parametric failures.

T_a	Failure Rate per Hour
85°C	250 FIT
40°C	12 FIT

Environmental Compliance

As an environmentally conscious company, KEMET is working continuously with improvements concerning the environmental effects of both our capacitors and their production. In Europe (RoHS Directive) and in some other geographical areas like China, legislation has been put in place to prevent the use of some hazardous materials, such as lead (Pb), in electronic equipment. All products in this catalog are produced to help our customers' obligations to guarantee their products and fulfill these legislative requirements. The only material of concern in our products has been lead (Pb), which has been removed from all designs to fulfill the requirement of containing less than 0.1% of lead in any homogeneous material. KEMET will closely follow any changes in legislation world wide and makes any necessary changes in its products, whenever needed.

Some customer segments such as medical, military and automotive electronics may still require the use of lead in electrode coatings. To clarify the situation and distinguish products from each other, a special symbol is used on the packaging labels for RoHS compatible capacitors.

Because of customer requirements, there may appear additional markings such as LF = Lead Free or LFW = Lead Free Wires on the label.

Table 1 – Ratings & Part Number Reference

VDC	Rated Capacitance	Size Code	Case Size	Ripple Current		ESR Maximum	Impedance Maximum	Part Number
	100 Hz 20°C (µF)		D x L (mm)	100 Hz 85°C (A)	10 kHz 85°C (A)	100 Hz 20°C (mΩ)	10 kHz 20°C (mΩ)	
25	15000	DA	36 x 52	8.2	8.7	24	20	ALS3(1)(2)153DA025
25	22000	DB	36 x 62	9.9	10.4	17	15	ALS3(1)(2)223DB025
25	33000	DE	36 x 82	13.2	13.9	11	10	ALS3(1)(2)333DE025
25	47000	DF	36 x 105	16.6	17.4	9	7	ALS3(1)(2)473DF025
25	68000	KE	51 x 82	15.6	16.9	11	10	ALS3(1)(2)683KE025
25	100000	KF	51 x 105	19.6	20.6	9	8	ALS3(1)(2)104KF025
25	150000	ND	77 x 75	17.9	18.1	11	11	ALS3(1)(2)154ND025
25	150000	MF	66 x 105	28.4	28.9	6	6	ALS3(1)(2)154MF025
25	220000	QC	90 x 67	21.9	22.6	9	8	ALS3(1)(2)224QC025
25	220000	QD	90 x 75	18.7	18.8	12	12	ALS3(1)(2)224QD025
25	220000	NF	77 x 105	28.1	30.8	6	6	ALS3(1)(2)224NF025
25	330000	QH	90 x 98	26.4	26.5	8	8	ALS3(1)(2)334QH025
25	330000	NP	77 x 146	37.3	39.6	5	5	ALS3(1)(2)334NP025
25	470000	QP	90 x 146	43.6	43.9	4	4	ALS3(1)(2)474QP025
25	470000	NT	77 x 220	45.8	47	4	4	ALS3(1)(2)474NT025
25	680000	QT	90 x 220	55.4	56.7	4	4	ALS3(1)(2)684QT025
40	10000	DA	36 x 52	7.9	8.4	23	20	ALS3(1)(2)103DA040
40	15000	DB	36 x 62	9.5	10	17	14	ALS3(1)(2)153DB040
40	22000	DE	36 x 82	12.7	13.3	11	10	ALS3(1)(2)223DE040
40	33000	KE	51 x 82	14.2	16.7	12	11	ALS3(1)(2)333KE040
40	47000	KE	51 x 82	14.2	16.7	12	11	ALS3(1)(2)473KE040
40	68000	KF	51 x 105	18	20.6	10	9	ALS3(1)(2)683KF040
40	100000	ND	77 x 75	16.4	16.5	13	12	ALS3(1)(2)104ND040
40	100000	MF	66 x 105	26.3	26.6	7	6	ALS3(1)(2)104MF040
40	100000	QC	90 x 67	23	24.8	8	7	ALS3(1)(2)104QC040
40	100000	QD	90 x 75	20.3	20.4	10	10	ALS3(1)(2)104QD040
40	150000	NF	77 x 105	26.8	30.2	8	8	ALS3(1)(2)154NF040
40	150000	QH	90 x 98	28.6	28.9	7	7	ALS3(1)(2)154QH040
40	220000	NP	77 x 146	35.4	39.6	6	5	ALS3(1)(2)224NP040
40	220000	QP	90 x 146	46.5	47	4	4	ALS3(1)(2)224QP040
40	330000	NT	77 x 220	45	46.5	4	4	ALS3(1)(2)334NT040
40	470000	QT	90 x 220	52.3	53.4	4	4	ALS3(1)(2)474QT040
63	4700	DA	36 x 52	6.7	7.4	36	28	ALS3(1)(2)472DA063
63	6800	DB	36 x 62	8.2	9	26	20	ALS3(1)(2)682DB063
63	10000	DE	36 x 82	10.8	11.9	17	14	ALS3(1)(2)103DE063
63	15000	DF	36 x 105	10.9	14.4	15	8	ALS3(1)(2)153DF063
63	15000	KE	51 x 82	13.9	14.4	12	11	ALS3(1)(2)153KE063
63	22000	KE	51 x 82	13.9	14.4	12	11	ALS3(1)(2)223KE063
63	33000	KF	51 x 105	17.4	18	10	9	ALS3(1)(2)333KF063
63	47000	ND	77 x 75	16.6	16.8	13	13	ALS3(1)(2)473ND063
63	47000	MF	66 x 105	26.7	26.5	8	7	ALS3(1)(2)473MF063
63	47000	QD	90 x 75	20.3	20.7	11	10	ALS3(1)(2)473QD063
63	68000	QC	90 x 67	20.9	22.4	10	9	ALS3(1)(2)683QC063
63	68000	NF	77 x 105	24.7	26.4	8	8	ALS3(1)(2)683NF063
63	68000	QH	90 x 98	28.9	29.6	8	7	ALS3(1)(2)683QH063
63	100000	NP	77 x 146	34.8	35.4	6	6	ALS3(1)(2)104NP063
63	150000	QP	90 x 146	40.2	40.7	5	5	ALS3(1)(2)154QP063
63	150000	NT	77 x 220	43.3	45.1	4	4	ALS3(1)(2)154NT063
63	220000	QT	90 x 220	52.4	54.3	4	4	ALS3(1)(2)224QT063
100	2200	DA	36 x 52	4.9	5.4	69	55	ALS3(1)(2)222DA100
100	3300	DB	36 x 62	6	6.6	49	39	ALS3(1)(2)332DB100
100	4700	DE	36 x 82	7.9	8.8	33	27	ALS3(1)(2)472DE100
100	6800	DF	36 x 105	10	11.1	23	19	ALS3(1)(2)682DF100
100	10000	KE	51 x 82	10.1	10.5	28	24	ALS3(1)(2)103KE100
100	15000	KF	51 x 105	12.6	13.1	20	18	ALS3(1)(2)153KF100
100	22000	ND	77 x 75	12	12.2	25	24	ALS3(1)(2)223ND100
100	22000	MF	66 x 105	18.4	19.1	13	12	ALS3(1)(2)223MF100
100	22000	QC	90 x 67	18.9	20.9	15	13	ALS3(1)(2)223QC100
VDC	Rated Capacitance	Size Code	Case Size	Ripple Current		ESR	Impedance	Part Number

(1) Mounting Code: 0 = plain can, 1 = threaded mounting stud
(2) Termination Code: See Termination Tables for available options

Table 1 – Ratings & Part Number Reference cont'd

VDC	Rated Capacitance	Size Code	Case Size	Ripple Current		ESR Maximum	Impedance Maximum	Part Number
	100 Hz 20°C (µF)		D x L (mm)	100 Hz 85°C (A)	10 kHz 85°C (A)	100 Hz 20°C (mΩ)	10 kHz 20°C (mΩ)	
100	22000	QD	90 x 75	14.7	15	21	20	ALS3(1)(2)223QD100
100	33000	NF	77 x 105	17.6	19	15	14	ALS3(1)(2)333NF100
100	33000	QH	90 x 98	20.8	21.2	13	12	ALS3(1)(2)333QH100
100	47000	NP	77 x 146	25.2	25.7	10	9	ALS3(1)(2)473NP100
100	68000	QP	90 x 146	29.4	29.8	9	8	ALS3(1)(2)683QP100
100	68000	NT	77 x 220	40.6	41.5	7	6	ALS3(1)(2)683NT100
100	100000	QT	90 x 220	30.8	33.3	6	5	ALS3(1)(2)104QT100
200	470	DA	36 x 52	2.6	4.3	286	227	ALS3(1)(2)471DA200
200	680	DB	36 x 62	3.9	5.4	199	158	ALS3(1)(2)681DB200
200	1000	DE	36 x 82	5.1	7.1	135	107	ALS3(1)(2)102DE200
200	1500	DF	36 x 105	5.6	9.1	90	72	ALS3(1)(2)152DF200
200	2200	KE	51 x 82	8.2	9.7	73	60	ALS3(1)(2)222KE200
200	3300	KF	51 x 105	9.2	13.1	48	40	ALS3(1)(2)332KF200
200	4700	ND	77 x 75	10.6	11.5	48	42	ALS3(1)(2)472ND200
200	4700	MF	66 x 105	13	19.1	33	27	ALS3(1)(2)472MF200
200	6800	MF	66 x 105	15.7	17.7	27	23	ALS3(1)(2)682MF200
200	6800	QC	90 x 67	13.7	18.5	38	29	ALS3(1)(2)682QC200
200	6800	QD	90 x 75	13.3	14.3	35	31	ALS3(1)(2)682QD200
200	10000	NF	77 x 105	14.9	15.9	28	25	ALS3(1)(2)103NF200
200	10000	QH	90 x 98	18.8	20.3	23	20	ALS3(1)(2)103QH200
200	15000	NP	77 x 146	21.4	22.7	18	16	ALS3(1)(2)153NP200
200	22000	QP	90 x 146	26.7	28	13	12	ALS3(1)(2)223QP200
200	22000	NT	77 x 220	36.1	38.7	11	9	ALS3(1)(2)223NT200
200	33000	QT	90 x 220	42.2	44.8	10	9	ALS3(1)(2)333QT200
250	470	DA	36 x 52	3	4.5	247	187	ALS3(1)(2)471DA250
250	680	DB	36 x 62	3.8	5.6	172	131	ALS3(1)(2)681DB250
250	1000	DE	36 x 82	5	7.4	117	89	ALS3(1)(2)102DE250
250	1500	KE	51 x 82	6.2	9.8	86	67	ALS3(1)(2)152KE250
250	2200	KE	51 x 82	7.7	9.1	69	55	ALS3(1)(2)222KE250
250	3300	KF	51 x 105	10.4	12.4	45	36	ALS3(1)(2)332KF250
250	3300	ND	77 x 75	10.4	11.9	52	43	ALS3(1)(2)332ND250
250	4700	MF	66 x 105	15	18.2	31	24	ALS3(1)(2)472MF250
250	4700	QD	90 x 75	13.2	14.9	38	32	ALS3(1)(2)472QD250
250	6800	QC	90 x 67	13.5	17.7	35	27	ALS3(1)(2)682QC250
250	6800	NF	77 x 105	15	16.5	29	25	ALS3(1)(2)682NF250
250	10000	QH	90 x 98	17.1	18.4	24	21	ALS3(1)(2)103QH250
250	10000	NP	77 x 146	21.6	24	19	16	ALS3(1)(2)103NP250
250	15000	QP	90 x 146	27	29.5	14	12	ALS3(1)(2)153QP250
250	15000	NT	77 x 220	32.4	36.5	12	10	ALS3(1)(2)153NT250
250	22000	NT	77 x 220	36.3	45.8	9	7	ALS3(1)(2)223NT250
250	22000	QT	90 x 220	42.3	47.4	12	10	ALS3(1)(2)223QT250
350	330	DA	36 x 52	2.4	5	325	226	ALS3(1)(2)331DA350
350	470	DE	36 x 82	3.4	7.2	223	154	ALS3(1)(2)471DE350
350	680	DF	36 x 105	4.4	9	154	107	ALS3(1)(2)681DF350
350	1000	KE	51 x 82	6.1	10.6	116	82	ALS3(1)(2)102KE350
350	1500	KF	51 x 105	8.2	13.5	77	55	ALS3(1)(2)152KF350
350	2200	KF	51 x 105	8.7	14.1	66	48	ALS3(1)(2)222KF350
350	2200	ND	77 x 75	9.1	15.6	66	50	ALS3(1)(2)222ND350
350	2200	MF	66 x 105	11.9	19.3	52	37	ALS3(1)(2)222MF350
350	3300	MF	66 x 105	12.8	20.3	39	29	ALS3(1)(2)332MF350
350	3300	QC	90 x 67	11.8	18	49	34	ALS3(1)(2)332QC350
350	3300	QD	90 x 75	12.5	19.8	47	36	ALS3(1)(2)332QD350
350	4700	NF	77 x 105	14.7	21.7	35	27	ALS3(1)(2)472NF350
350	4700	QH	90 x 98	16.3	26.6	31	24	ALS3(1)(2)472QH350
350	6800	NP	77 x 146	19.3	26	23	18	ALS3(1)(2)682NP350
350	6800	QP	90 x 146	24.9	34.4	20	15	ALS3(1)(2)682QP350
350	10000	NT	77 x 220	31.7	39.3	15	11	ALS3(1)(2)103NT350
350	15000	QT	90 x 220	38.2	46.4	15	12	ALS3(1)(2)153QT350
VDC	Rated Capacitance	Size Code	Case Size	Ripple Current		ESR	Impedance	Part Number

(1) Mounting Code: 0 = plain can, 1 = threaded mounting stud
(2) Termination Code: See Termination Tables for available options

Table 1 – Ratings & Part Number Reference cont'd

VDC	Rated Capacitance	Size Code	Case Size	Ripple Current		ESR Maximum	Impedance Maximum	Part Number
	100 Hz 20°C (µF)		D x L (mm)	100 Hz 85°C (A)	10 kHz 85°C (A)	100 Hz 20°C (mΩ)	10 kHz 20°C (mΩ)	
400	220	DA	36 x 52	2.1	4.4	570	387	ALS3(1)(2)221DA400
400	330	DB	36 x 62	2.7	5.5	382	260	ALS3(1)(2)331DB400
400	470	DE	36 x 82	3.5	7.1	267	182	ALS3(1)(2)471DE400
400	680	DF	36 x 105	4.4	8.8	185	126	ALS3(1)(2)681DF400
400	1000	KE	51 x 82	5.8	10.3	139	98	ALS3(1)(2)102KE400
400	1500	KF	51 x 105	7.8	13.1	92	65	ALS3(1)(2)152KF400
400	1500	ND	77 x 75	8.3	14.7	97	70	ALS3(1)(2)152ND400
400	2200	KF	51 x 105	8.4	13.5	78	56	ALS3(1)(2)222KF400
400	2200	MF	66 x 105	11.2	18.8	62	44	ALS3(1)(2)222MF400
400	2200	QD	90 x 75	10.7	18.9	69	50	ALS3(1)(2)222QD400
400	3300	LF	63.5 X 105	11.81	20.54	54	36	ALS3(1)(2)332LF400
400	3300	QC	90 x 67	11.7	17.1	53	38	ALS3(1)(2)332QC400
400	3300	NF	77 x 105	13.4	21.3	49	36	ALS3(1)(2)332NF400
400	3300	QH	90 x 98	14.9	25.3	45	32	ALS3(1)(2)332QH400
400	3900	MJ	66 x 115	12.98	21.02	50	35	ALS3(1)(2)392MJ400
400	4700	NF	77 x 105	14.6	20.9	38	26	ALS3(1)(2)472NF400
400	4700	QH	90 x 98	17.1	25.4	36	26	ALS3(1)(2)472QH400
400	4700	NJ	77 X 115	15.25	23.20	38	26	ALS3(1)(2)472NJ400
400	4700	NP	77 x 146	18	26	33	24	ALS3(1)(2)472NP400
400	6800	NP	77 x 146	19.5	26.9	27	20	ALS3(1)(2)682NP400
400	6800	QP	90 x 146	23.2	32.9	24	17	ALS3(1)(2)682QP400
400	6800	NT	77 x 220	29	40.7	22	15	ALS3(1)(2)682NT400
400	10000	NT	77 X 220	31.50	42.00	19	14	ALS3(1)(2)103NT400
400	10000	QT	90 x 220	35.7	49.4	17	12	ALS3(1)(2)103QT400
415	220	DA	36 x 52	2.1	4.4	555	368	ALS3(1)(2)221DA415
415	330	DB	36 x 62	2.7	5.6	372	247	ALS3(1)(2)331DB415
415	470	DE	36 x 82	3.5	7.2	261	173	ALS3(1)(2)471DE415
415	680	DF	36 x 105	4.5	9	180	120	ALS3(1)(2)681DF415
415	1000	KE	51 x 82	5.7	10.4	136	94	ALS3(1)(2)102KE415
415	1500	KF	51 x 105	7.6	13.1	90	62	ALS3(1)(2)152KF415
415	1500	ND	77 x 75	8.1	14.7	96	68	ALS3(1)(2)152ND415
415	2200	MF	66 x 105	11	18.9	61	42	ALS3(1)(2)222MF415
415	2200	QC	90 x 67	10.5	17.5	71	49	ALS3(1)(2)222QC415
415	2200	QD	90 x 75	11.1	18.9	68	49	ALS3(1)(2)222QD415
415	3300	NF	77 x 105	13.4	21.3	48	36	ALS3(1)(2)332NF415
415	3300	QH	90 x 98	14.6	25.3	45	32	ALS3(1)(2)332QH415
415	4700	NP	77 x 146	17.6	25.9	33	24	ALS3(1)(2)472NP415
415	6800	QP	90 x 146	22.7	32.8	23	17	ALS3(1)(2)682QP415
415	6800	NT	77 x 220	28.5	40.1	21	15	ALS3(1)(2)682NT415
415	10000	QT	90 x 220	35.2	48.7	17	12	ALS3(1)(2)103QT415
450	150	DA	36 x 52	1.8	4.1	735	485	ALS3(1)(2)151DA450
450	220	DB	36 x 62	2.4	5.1	502	332	ALS3(1)(2)221DB450
450	330	DE	36 x 82	3.1	6.7	335	221	ALS3(1)(2)331DE450
450	470	DF	36 x 105	4	8.4	235	155	ALS3(1)(2)471DF450
450	680	KE	51 x 82	4.9	9.9	175	117	ALS3(1)(2)681KE450
450	1000	KF	51 x 105	6.5	12.6	118	79	ALS3(1)(2)102KF450
450	1500	ND	77 x 75	8.7	14.9	95	65	ALS3(1)(2)152ND450
450	1500	MF	66 x 105	9.5	17.4	81	52	ALS3(1)(2)152MF450
450	2200	QC	90 x 67	9.6	15.4	74	46	ALS3(1)(2)222QC450
450	2200	QD	90 x 75	11.5	19	67	47	ALS3(1)(2)222QD450
450	2200	MF	66 x 105	11.1	19.3	67	47	ALS3(1)(2)222MF450
450	2200	NF	77 x 105	12.2	21.1	59	41	ALS3(1)(2)222NF450
450	3300	QD	90 x 75	12.6	17.9	53	33	ALS3(1)(2)332QD450
450	3300	NF	77 x 105	13.8	21.2	40	30	ALS3(1)(2)332NF450
450	3300	QH	90 x 98	15.6	25.5	44	30	ALS3(1)(2)332QH450
450	4700	NJ	77 X 115	14.93	22.76	30	20	ALS3(1)(2)472NJ450
450	3300	NP	77 x 146	16.1	25.1	39	27	ALS3(1)(2)332NP450
450	4700	NP	77 x 146	17.1	25.2	36	26	ALS3(1)(2)472NP450
VDC	Rated Capacitance	Size Code	Case Size	Ripple Current		ESR	Impedance	Part Number

(1) Mounting Code: 0 = plain can, 1 = threaded mounting stud

(2) Termination Code: See Termination Tables for available options

Table 1 – Ratings & Part Number Reference cont'd

VDC	Rated Capacitance	Size Code	Case Size	Ripple Current		ESR Maximum	Impedance Maximum	Part Number
	100 Hz 20°C (µF)		D x L (mm)	100 Hz 85°C (A)	10 kHz 85°C (A)	100 Hz 20°C (mΩ)	10 kHz 20°C (mΩ)	
450	4700	QP	90 x 146	21	31.8	29	19	ALS3(1)(2)472QP450
450	6800	NT	77 x 220	27.4	38.8	21	14	ALS3(1)(2)682NT450
450	10000	QT	90 x 220	33.4	46.5	18	13	ALS3(1)(2)103QT450
500	100	DA	36 x 52	1.6	2.9	1385	847	ALS3(1)(2)101DA500
500	150	DB	36 x 62	2	3.7	930	566	ALS3(1)(2)151DB500
500	220	DE	36 x 82	2.7	4.8	635	386	ALS3(1)(2)221DE500
500	330	DE	36 x 82	3.2	5.7	450	350	ALS3(1)(2)331DE500
500	330	DF	36 x 105	3.5	6.2	420	258	ALS3(1)(2)331DF500
500	470	KE	51 x 82	4.4	7.5	365	194	ALS3(1)(2)471KE500
500	680	KF	51 x 105	5.7	9.6	255	133	ALS3(1)(2)681KF500
500	1000	ND	77 x 75	7.6	12.2	173	109	ALS3(1)(2)102ND500
500	1000	MF	66 x 105	8.1	13.8	175	96	ALS3(1)(2)102MF500
500	1500	NF	77 x 105	10.6	17	120	65	ALS3(1)(2)152NF500
500	1500	QC	90 x 67	9.5	14.3	110	87	ALS3(1)(2)152QC500
500	1500	QD	90 x 75	10.1	15.9	119	76	ALS3(1)(2)152QD500
500	2200	QH	90 x 98	13.7	21.1	80	50	ALS3(1)(2)222QH500
500	2200	NP	77 x 146	14.3	21.8	80	44	ALS3(1)(2)222NP500
500	3300	NP	77 x 146	15.3	22.6	54	39	ALS3(1)(2)332NP500
500	3300	QP	90 x 146	19	28.3	51	32	ALS3(1)(2)332QP500
500	4700	NT	77 x 220	24.3	33.3	37	24	ALS3(1)(2)472NT500
500	6800	QT	90 x 220	26.5	41.3	27	22	ALS3(1)(2)682QT500
VDC	**Rated Capacitance**	**Size Code**	**Case Size**	**Ripple Current**		**ESR**	**Impedance**	**Part Number**

(1) Mounting Code: 0 = plain can, 1 = threaded mounting stud
(2) Termination Code: See Termination Tables for available options

Mechanical Data

Polarity and Reversed Voltage
Aluminium Electrolytic capacitors manufactured for use in DC applications contain an anode foil and a cathode foil. As such, they are polarized devices and must be connected with the +ve to the anode foil and the -ve to the cathode foil. If this were to be reversed then the electrolytic process that took place in forming the oxide layer on the anode would be recreated in trying to form an oxide layer on the cathode. In forming the cathode foil in this way, heat would be generated and gas given off within the capacitor, usually leading to catastrophic failure.

The cathode foil already possesses a thin stabilized oxide layer. This thin oxide layer is equivalent to a forming voltage of approximately 2 V. As a result, the capacitor can withstand a voltage reversal of up to 2 V for short periods. Above this voltage, the formation process will commence. Aluminium Electrolytic capacitors can also be manufactured for use in intermittent AC applications by using two anode foils in place of one anode and one cathode.

Mounting Position
The capacitor can be mounted in any position as long as the safety vent can operate. It is possible for some electrolyte to be expelled. As this is a conducting liquid, suitable precautions should be initiated by the system designer to avoid secondary short circuits.
The capacitors are designed to be mounted in free air and are not suitable for submersion in liquid.

Low Inductance Version
A low inductance version of the ALS30/31 capacitors can be designed upon request, typically reducing the inductance by up to 40% of the standard capacitor's inductance. It is available in 77 & 90 mm diameters.

Insulating Resistance
≥ 100 MΩ at 100 VDC across insulating sleeve. UL recognized sleeving is available for custom parts in this range, upon request.
(UL No. E358957)

Voltage Proof
≥ 2,500 VDC across insulating sleeve

Safety Vent
A safety vent for overpressure is featured on terminal deck. This is in the form of a rubber plug designed to relieve build-up of internal pressure due to overstress or catastrophic failure.

Marking

Construction

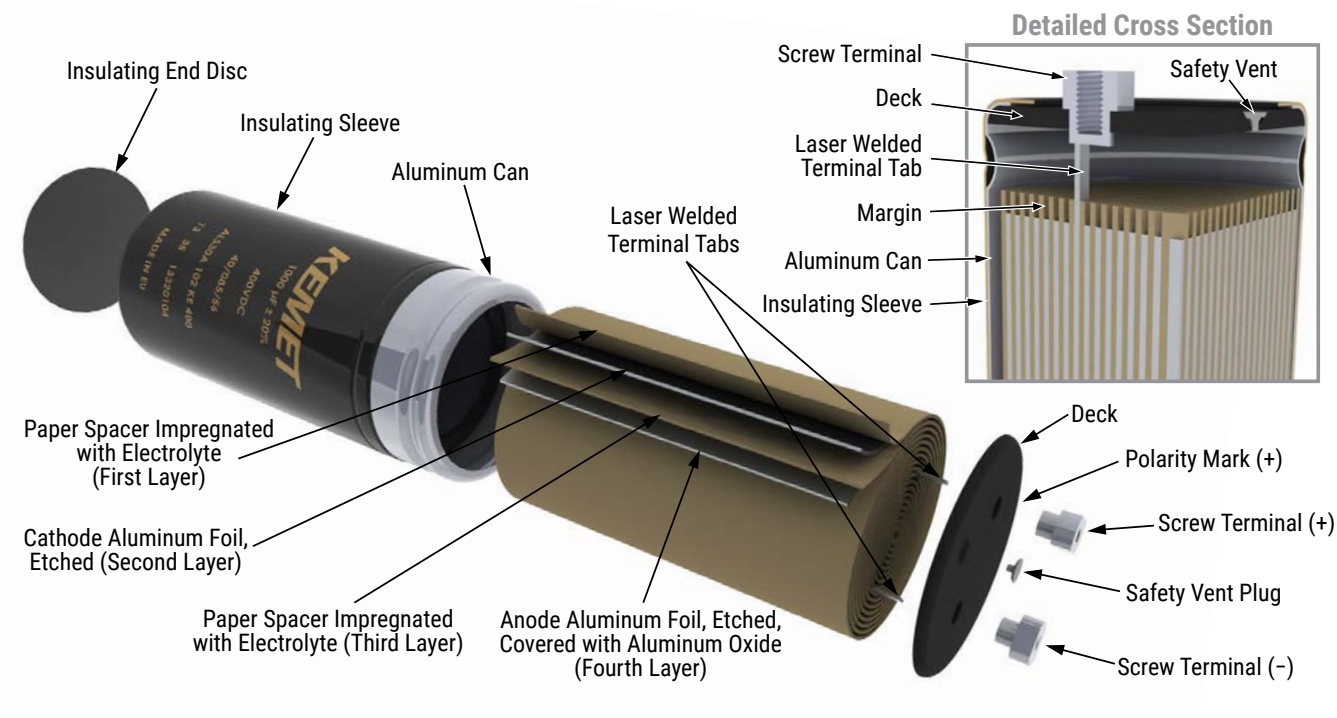

Construction Data

The manufacturing process begins with the anode foil being electrochemically etched to increase the surface area and then "formed" to produce the aluminum oxide layer. Both the anode and cathode foils are then interleaved with absorbent paper and wound into a cylinder. During the winding process, aluminum tabs are attached to each foil to provide the electrical contact.

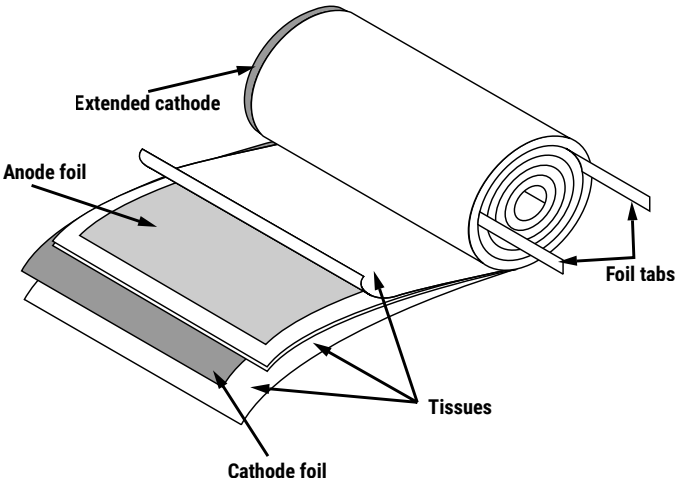

The deck, complete with terminals, is attached to the tabs and then folded down to rest on top of the winding. The complete winding is impregnated with electrolyte before being housed in a suitable container, usually an aluminum can, and sealed. Throughout the process, all materials inside the housing must be maintained at the highest purity and be compatible with the electrolyte.

Each capacitor is aged and tested before being sleeved and packed. The purpose of aging is to repair any damage in the oxide layer and thus reduce the leakage current to a very low level. Aging is normally carried out at the rated temperature of the capacitor and is accomplished by applying voltage to the device while carefully controlling the supply current. The process may take several hours to complete.

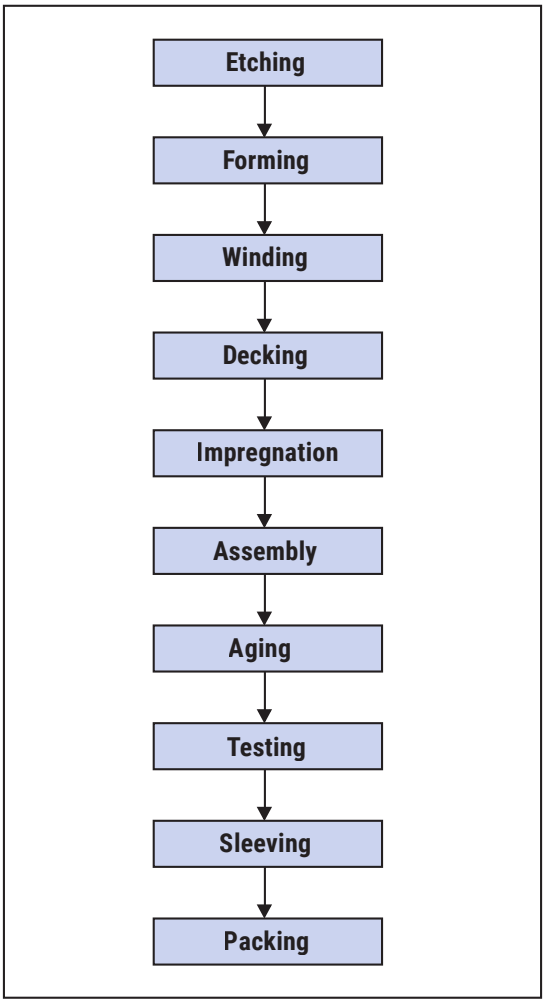

Damage to the oxide layer can occur due to variety of reasons:
- Slitting of the anode foil after forming
- Attaching the tabs to the anode foil
- Minor mechanical damage caused during winding

A sample from each batch is taken by the quality department after completion of the production process. This sample size is controlled by the use of recognized sampling tables defined in BS 6001.

The following tests are applied and may be varied at the request of the customer. In this case the batch, or special procedure, will determine the course of action.

Electrical:
- Leakage current
- Capacitance
- ESR
- Impedance
- Tan Delta

Mechanical/Visual:
- Overall dimensions
- Torque test of mounting stud
- Print detail
- Box labels
- Packaging, including packed quantity

KEMET Electronic Corporation Sales Offices

For a complete list of our global sales offices, please visit www.kemet.com/sales.

Disclaimer

All product specifications, statements, information and data (collectively, the "Information") in this datasheet are subject to change. The customer is responsible for checking and verifying the extent to which the Information contained in this publication is applicable to an order at the time the order is placed.

All Information given herein is believed to be accurate and reliable, but it is presented without guarantee, warranty, or responsibility of any kind, expressed or implied.

Statements of suitability for certain applications are based on KEMET Electronics Corporation's ("KEMET") knowledge of typical operating conditions for such applications, but are not intended to constitute – and KEMET specifically disclaims – any warranty concerning suitability for a specific customer application or use. The Information is intended for use only by customers who have the requisite experience and capability to determine the correct products for their application. Any technical advice inferred from this Information or otherwise provided by KEMET with reference to the use of KEMET's products is given gratis, and KEMET assumes no obligation or liability for the advice given or results obtained.

Although KEMET designs and manufactures its products to the most stringent quality and safety standards, given the current state of the art, isolated component failures may still occur. Accordingly, customer applications which require a high degree of reliability or safety should employ suitable designs or other safeguards (such as installation of protective circuitry or redundancies) in order to ensure that the failure of an electrical component does not result in a risk of personal injury or property damage.

Although all product–related warnings, cautions and notes must be observed, the customer should not assume that all safety measures are indicted or that other measures may not be required.

KEMET is a registered trademark of KEMET Electronics Corporation.