L6201
L6202 - L6203

DMOS FULL BRIDGE DRIVER

- SUPPLY VOLTAGE UP TO 48V
- 5A MAX PEAK CURRENT (2A max. for L6201)
- TOTAL RMS CURRENT UP TO
  L6201: 1A; L6202: 1.5A; L6203/L6201PS: 4A
- $R_{DS\ (ON)}$ 0.3 Ω (typical value at 25 °C)
- CROSS CONDUCTION PROTECTION
- TTL COMPATIBLE DRIVE
- OPERATING FREQUENCY UP TO 100 KHz
- THERMAL SHUTDOWN
- INTERNAL LOGIC SUPPLY
- HIGH EFFICIENCY

MULTIPOWER BCD TECHNOLOGY

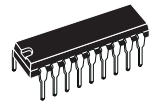

Powerdip 12+3+3

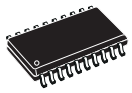

SO20 (12+4+4)

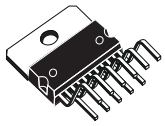

Multiwatt11

PowerSO20

ORDERING NUMBERS:
L6201 (SO20)
L6201PS (PowerSO20)
L6202 (Powerdip18)
L6203 (Multiwatt)

DESCRIPTION

The I.C. is a full bridge driver for motor control applications realized in Multipower-BCD technology which combines isolated DMOS power transistors with CMOS and Bipolar circuits on the same chip. By using mixed technology it has been possible to optimize the logic circuitry and the power stage to achieve the best possible performance. The DMOS output transistors can operate at supply voltages up to 42V and efficiently at high switching speeds. All the logic inputs are TTL, CMOS and µC compatible. Each channel (half-bridge) of the device is controlled by a separate logic input, while a common enable controls both channels. The I.C. is mounted in three different packages.

BLOCK DIAGRAM

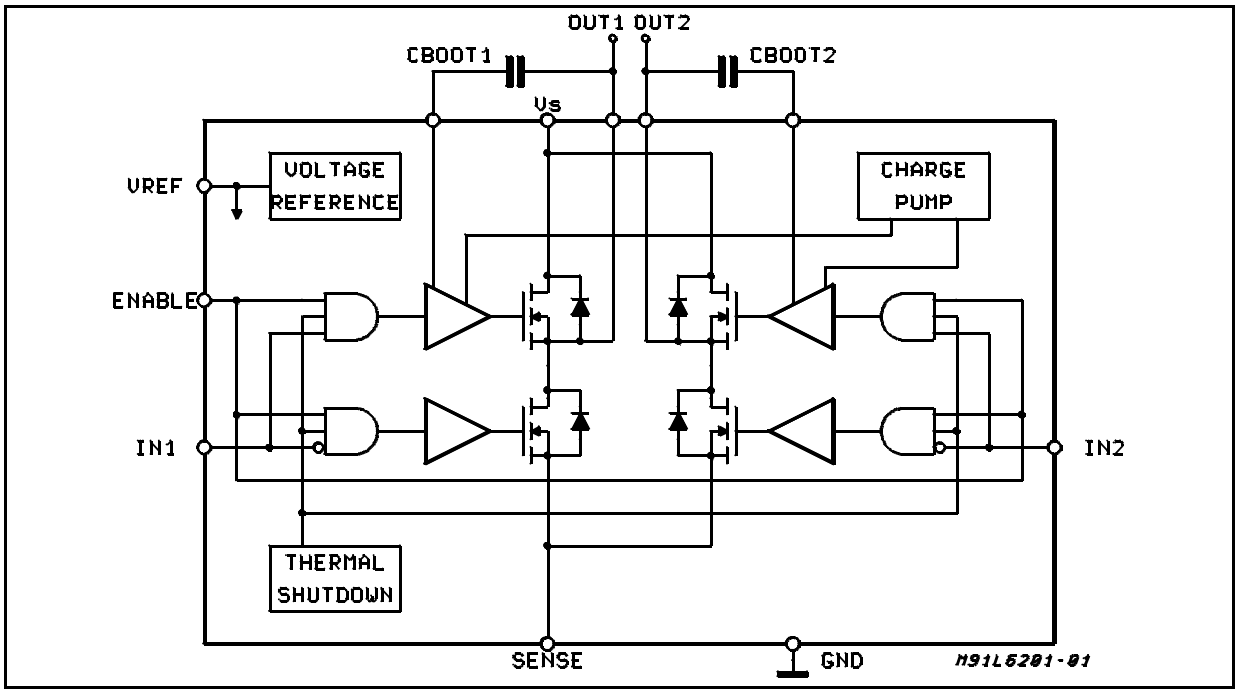

sales@prom-elec.com / ООО ПРОМЭЛЕКТРОНИКА

PIN CONNECTIONS (Top view)

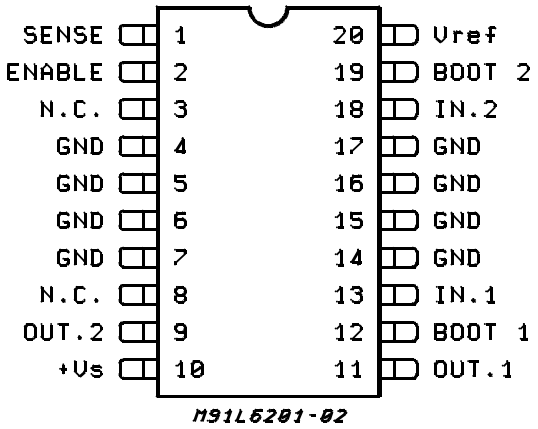

SO20

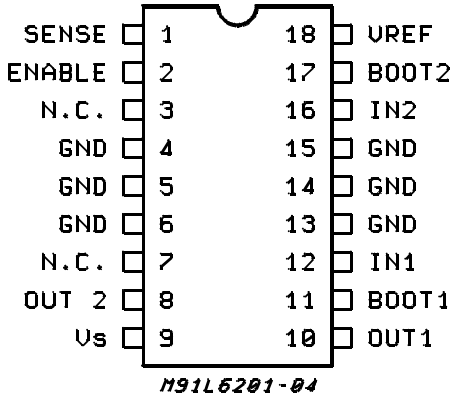

POWERDIP

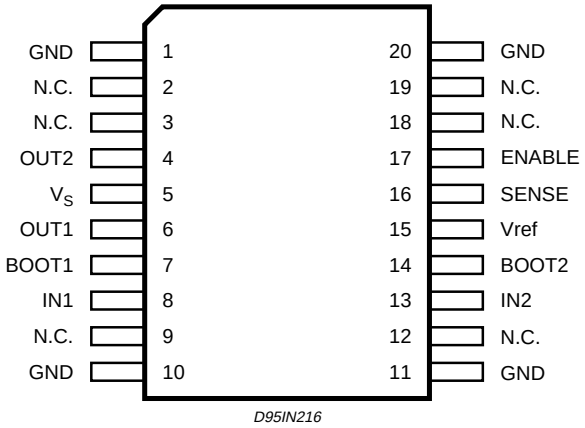

PowerSO20

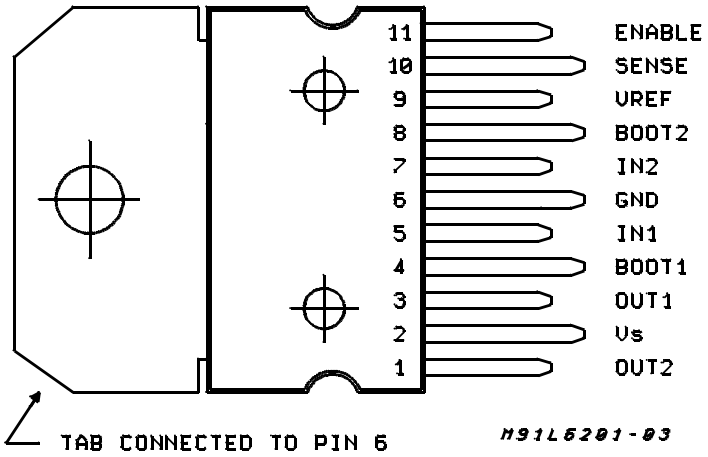

MULTIWATT11

PINS FUNCTIONS

Device				Name	Function
L6201	L6201PS	L6202	L6203		
1	16	1	10	SENSE	A resistor R_{sense} connected to this pin provides feedback for motor current control.
2	17	2	11	ENABLE	When a logic high is present on this pin the DMOS POWER transistors are enabled to be selectively driven by IN1 and IN2.
3	2,3,9,12, 18,19	3		N.C.	Not Connected
4,5	–	4	6	GND	Common Ground Terminal
–	1, 10	5		GND	Common Ground Terminal
6,7	–	6		GND	Common Ground Terminal
8	–	7		N.C.	Not Connected
9	4	8	1	OUT2	Ouput of 2nd Half Bridge
10	5	9	2	V_s	Supply Voltage
11	6	10	3	OUT1	Output of first Half Bridge
12	7	11	4	BOOT1	A boostrap capacitor connected to this pin ensures efficient driving of the upper POWER DMOS transistor.
13	8	12	5	IN1	Digital Input from the Motor Controller
14,15	–	13	6	GND	Common Ground Terminal
–	11, 20	14		GND	Common Ground Terminal
16,17	–	15		GND	Common Ground Terminal
18	13	16	7	IN2	Digital Input from the Motor Controller
19	14	17	8	BOOT2	A boostrap capacitor connected to this pin ensures efficient driving of the upper POWER DMOS transistor.
20	15	18	9	V_{ref}	Internal voltage reference. A capacitor from this pin to GND is recommended. The internal Ref. Voltage can source out a current of 2mA max.

ABSOLUTE MAXIMUM RATINGS

Symbol	Parameter	Value	Unit
V_s	Power Supply	52	V
V_{OD}	Differential Output Voltage (between Out1 and Out2)	60	V
V_{IN}, V_{EN}	Input or Enable Voltage	– 0.3 to + 7	V
I_o	Pulsed Output Current for L6201PS/L6202/L6203 (Note 1) – Non Repetitive (< 1 ms) for L6201 for L6201PS/L6202/L6203 DC Output Current for L6201 (Note 1)	5 5 10 1	A A A A
V_{sense}	Sensing Voltage	– 1 to + 4	V
V_b	Boostrap Peak Voltage	60	V
P_{tot}	Total Power Dissipation: T_{pins} = 90°C for L6201 for L6202 T_{case} = 90°C for L6201PS/L6203 T_{amb} = 70°C for L6201 (Note 2) for L6202 (Note 2) for L6201PS/L6203 (Note 2)	 4 5 20 0.9 1.3 2.3	 W W W W W W
T_{stg}, T_j	Storage and Junction Temperature	– 40 to + 150	°C

Note 1: Pulse width limited only by junction temperature and transient thermal impedance (see thermal characteristics)
Note 2: Mounted on board with minimized dissipating copper area.

THERMAL DATA

Symbol	Parameter		Value				Unit
			L6201	L6201PS	L6202	L6203	
$Rt_{h\ j\text{-}pins}$	Thermal Resistance Junction-pins	max	15	–	12	–	°C/W
$Rt_{h\ j\text{-}case}$	Thermal Resistance Junction Case	max.	–	–	–	3	
$Rt_{h\ j\text{-}amb}$	Thermal Resistance Junction-ambient	max.	85	13 (*)	60	35	

(*) Mounted on aluminium substrate.

ELECTRICAL CHARACTERISTICS (Refer to the Test Circuits; T_j = 25°C, V_S = 42V, V_{sens} = 0, unless otherwise specified).

Symbol	Parameter	Test Conditions	Min.	Typ.	Max.	Unit
V_s	Supply Voltage		12	36	48	V
V_{ref}	Reference Voltage	I_{REF} = 2mA		13.5		V
I_{REF}	Output Current				2	mA
I_s	Quiescent Supply Current	EN = H V_{IN} = L EN = H V_{IN} = H I_L = 0 EN = L (Fig. 1,2,3)		10 10 8	15 15 15	mA mA mA
f_c	Commutation Frequency (*)			30	100	KHz
T_j	Thermal Shutdown			150		°C
T_d	Dead Time Protection			100		ns

TRANSISTORS

OFF						
I_{DSS}	Leakage Current	Fig. 11 V_s = 52 V			1	mA
ON						
R_{DS}	On Resistance	Fig. 4,5		0.3	0.55	Ω
$V_{DS(ON)}$	Drain Source Voltage	Fig. 9 I_{DS} = 1A **L6201** I_{DS} = 1.2A **L6202** I_{DS} = 3A **L6201PS/03**		 0.3 0.36 0.9		 V V V
V_{sens}	Sensing Voltage		– 1		4	V

SOURCE DRAIN DIODE

V_{sd}	Forward ON Voltage	Fig. 6a and b I_{SD} = 1A **L6201** EN = L I_{SD} = 1.2A **L6202** EN = L I_{SD} = 3A **L6201PS/03** EN = L		 0.9 (**) 0.9 (**) 1.35(**)		 V V V
t_{rr}	Reverse Recovery Time	$\frac{dif}{dt}$ = 25 A/µs I_F = 1A L6201 I_F = 1.2A L6202 I_F = 3A L6203		300		ns
t_{fr}	Forward Recovery Time			200		ns

LOGIC LEVELS

$V_{IN\ L}$, $V_{EN\ L}$	Input Low Voltage		– 0.3		0.8	V
$V_{IN\ H}$, $V_{EN\ H}$	Input High Voltage		2		7	V
$I_{IN\ L}$, $I_{EN\ L}$	Input Low Current	V_{IN}, V_{EN} = L			–10	µA
$I_{IN\ H}$, $I_{EN\ H}$	Input High Current	V_{IN}, V_{EN} = H		30		µA

ELECTRICAL CHARACTERISTICS (Continued)
LOGIC CONTROL TO POWER DRIVE TIMING

Symbol	Parameter	Test Conditions	Min.	Typ.	Max.	Unit
t_1 (V_i)	Source Current Turn-off Delay	Fig. 12		300		ns
t_2 (V_i)	Source Current Fall Time	Fig. 12		200		ns
t_3 (V_i)	Source Current Turn-on Delay	Fig. 12		400		ns
t_4 (V_i)	Source Current Rise Time	Fig. 12		200		ns
t_5 (V_i)	Sink Current Turn-off Delay	Fig. 13		300		ns
t_6 (V_i)	Sink Current Fall Time	Fig. 13		200		ns
t_7 (V_i)	Sink Current Turn-on Delay	Fig. 13		400		ns
t_8 (V_i)	Sink Current Rise Time	Fig. 13		200		ns

(*) Limited by power dissipation
(**) In synchronous rectification the drain-source voltage drop VDS is shown in fig. 4 (L6202/03); typical value for the L6201 is of 0.3V.

Figure 1: Typical Normalized I_S vs. T_j

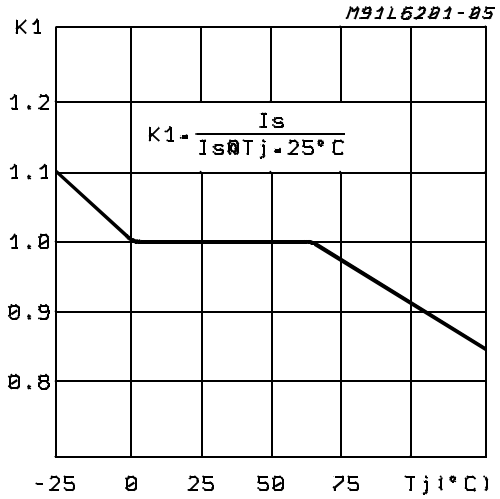

Figure 2: Typical Normalized Quiescent Current vs. Frequency

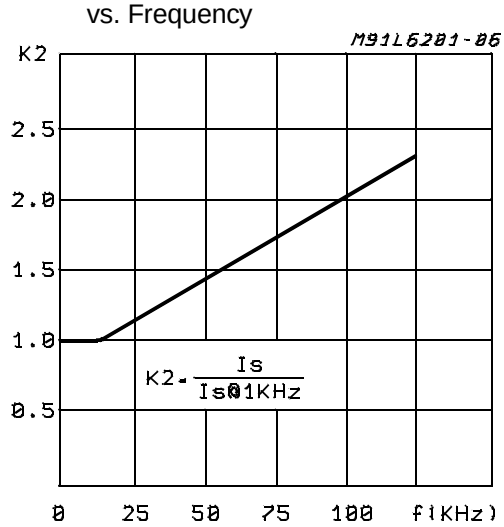

Figure 3: Typical Normalized I_S vs. V_S

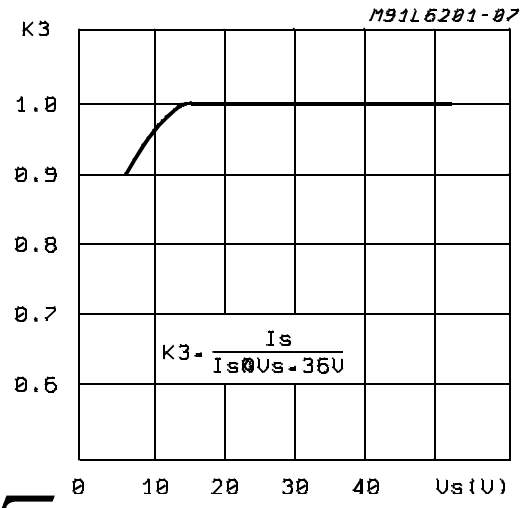

Figure 4: Typical $R_{DS\ (ON)}$ vs. V_S ~ V_{ref}

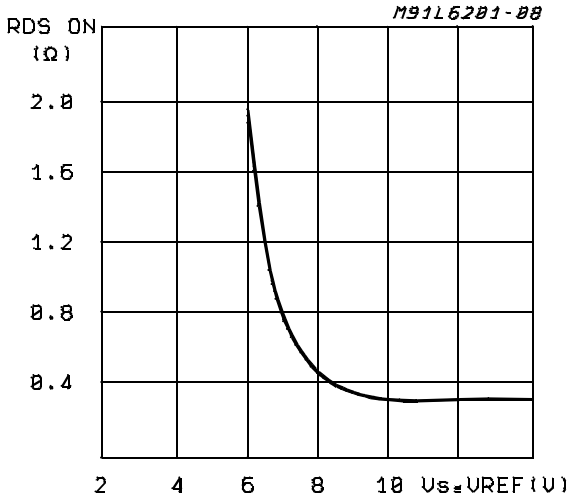

Figure 5: Normalized $R_{DS\ (ON)}$at 25°C vs. Temperature Typical Values

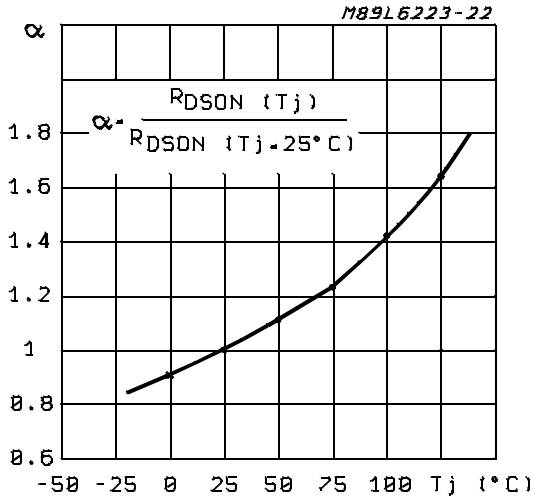

Figure 6a: Typical Diode Behaviour in Synchronous Rectification (L6201)

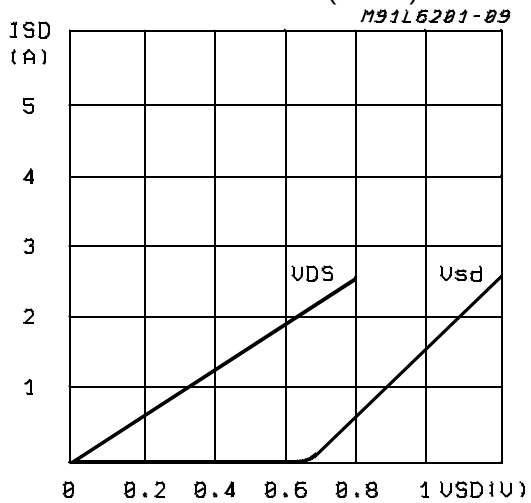

Figure 6b: Typical Diode Behaviour in Synchronous Rectification (L6201PS/02/03)

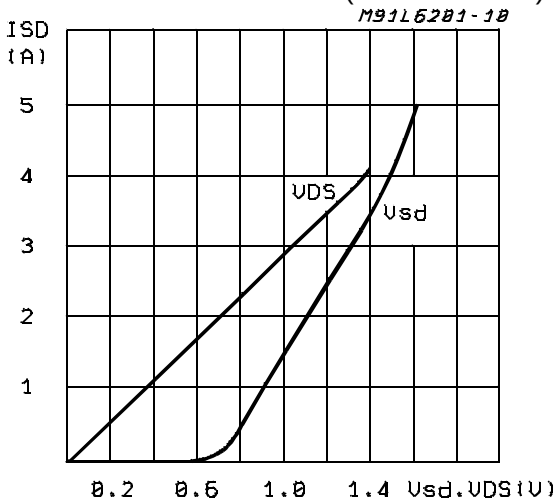

Figure 7a: Typical Power Dissipation vs I_L (L6201)

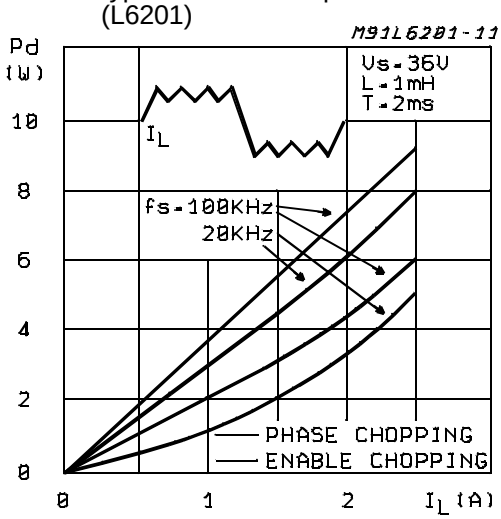

Figure 7b: Typical Power Dissipation vs I_L (L6201PS, L6202, L6203))

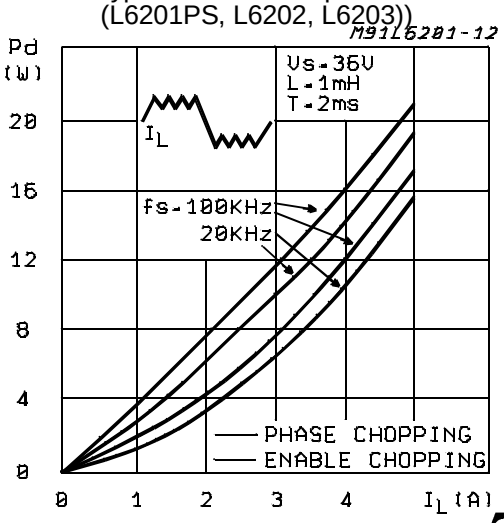

Figure 8a: Two Phase Chopping

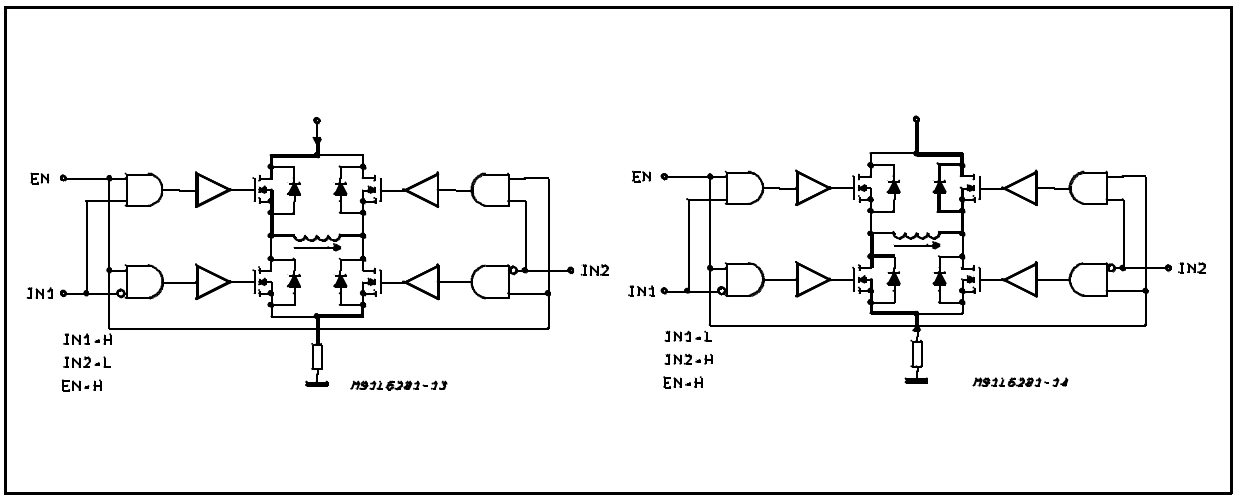

Figure 8b: One Phase Chopping

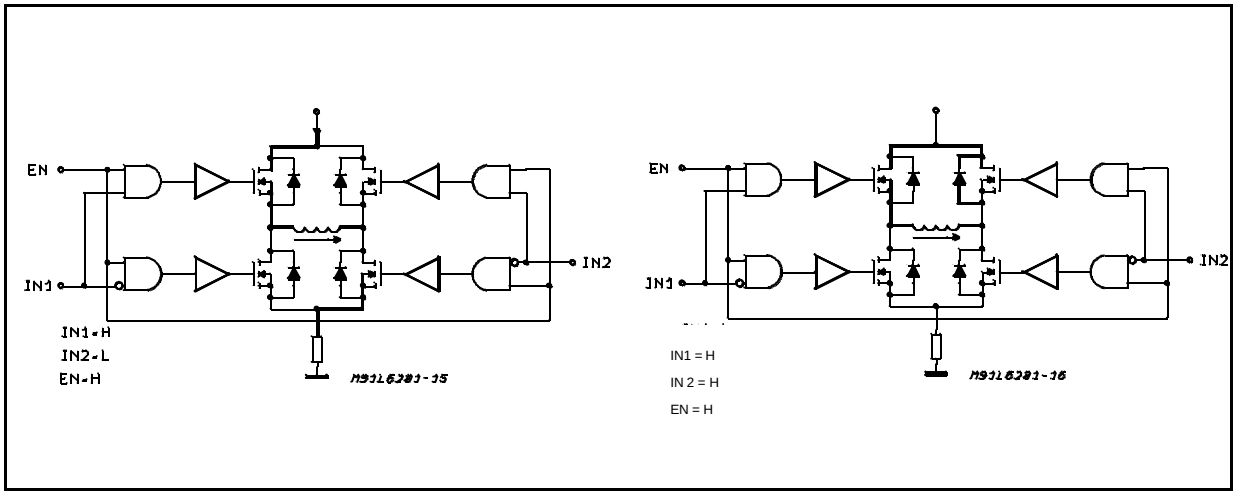

Figure 8c: Enable Chopping

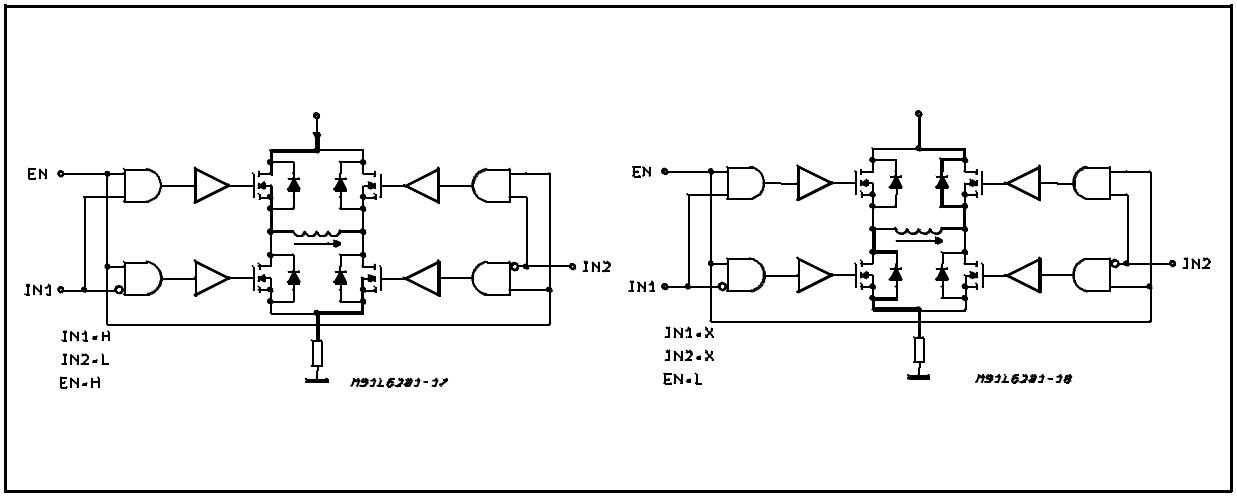

TEST CIRCUITS

Figure 9: Saturation Voltage

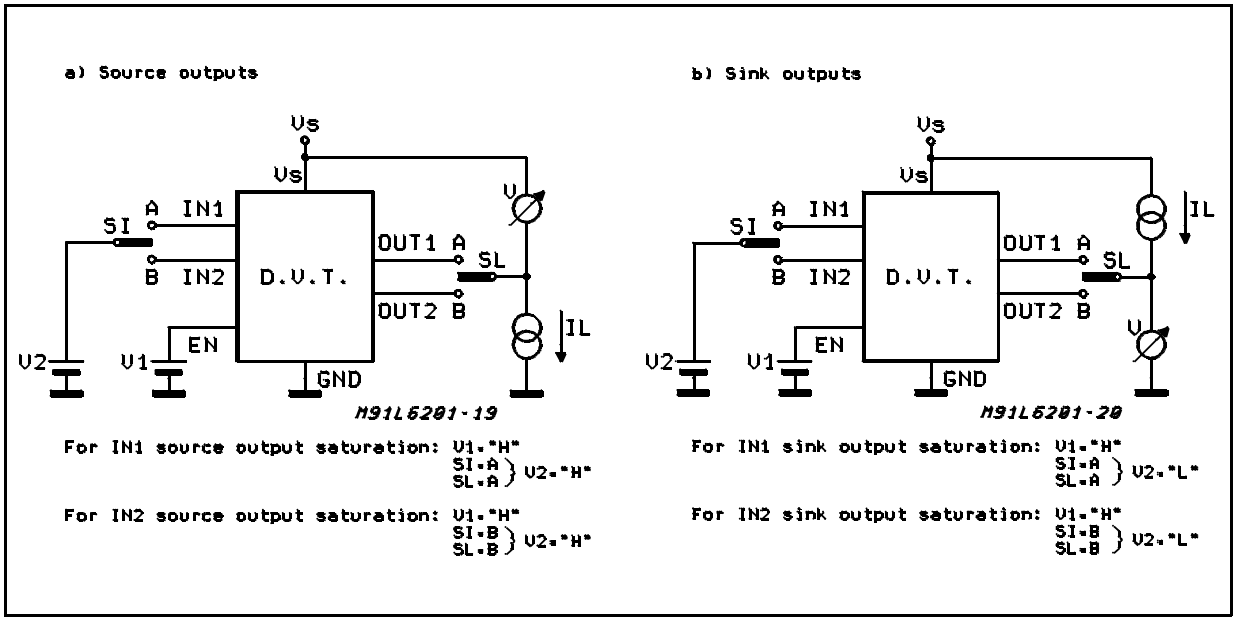

Figure 10: Quiescent Current

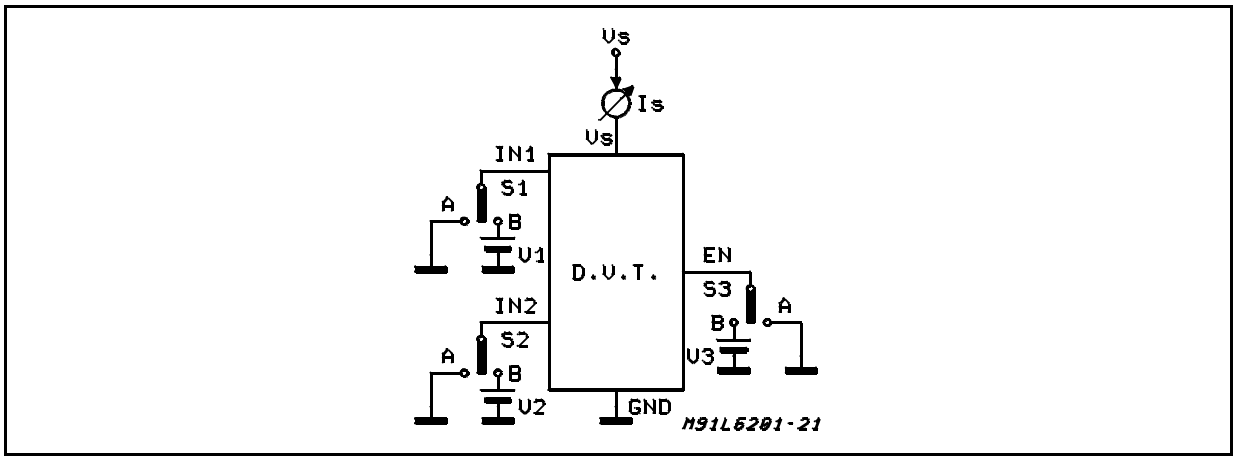

Figure 11: Leakage Current

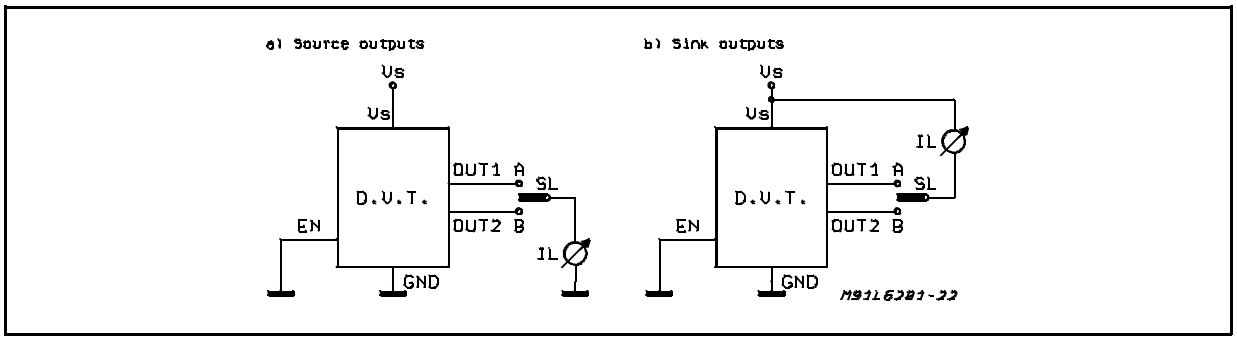

Figure 12: Source Current Delay Times vs. Input Chopper

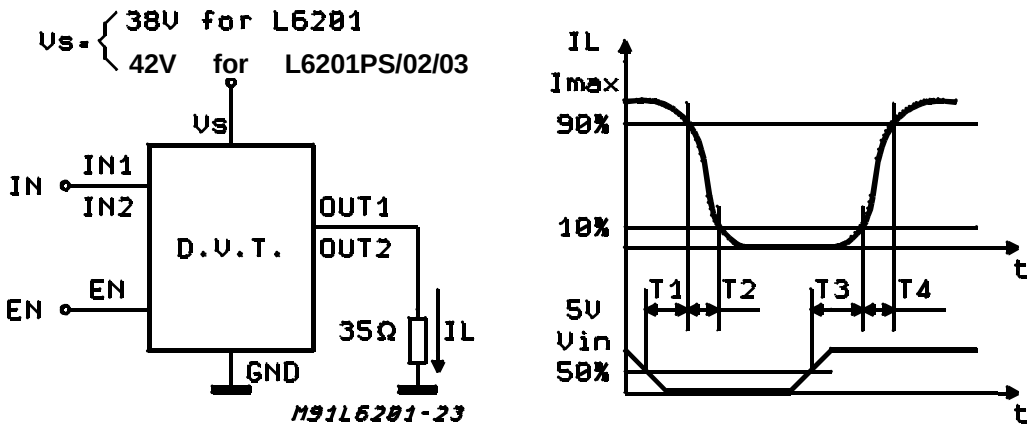

Figure 13: Sink Current Delay Times vs. Input Chopper

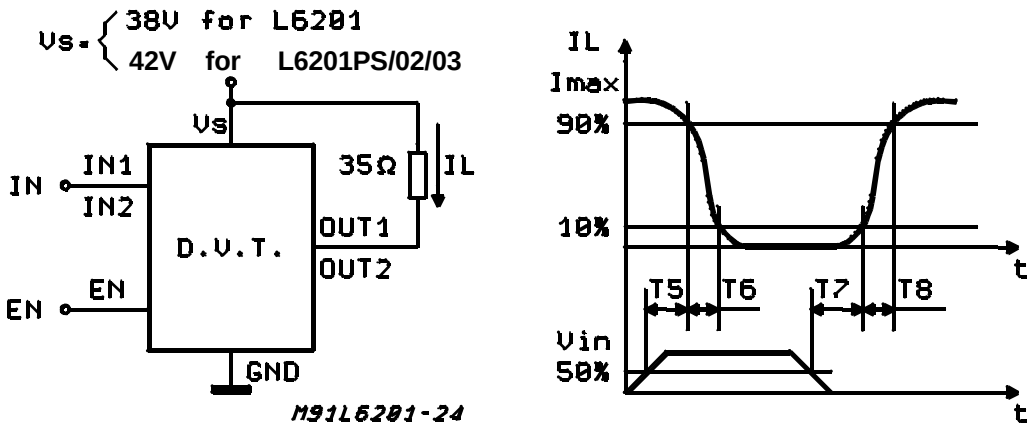

CIRCUIT DESCRIPTION

The L6201/1PS/2/3 is a monolithic full bridge switching motor driver realized in the new Multipower-BCD technology which allows the integration of multiple, isolated DMOS power transistors plus mixed CMOS/bipolar control circuits. In this way it has been possible to make all the control inputs TTL, CMOS and µC compatible and eliminate the necessity of external MOS drive components. The Logic Drive is shown in table 1.

Table 1

Inputs			Output Mosfets (*)
	IN1	IN2	
V_{EN} = H	L L H H	L H L H	Sink 1, Sink 2 Sink 1, Source 2 Source 1, Sink 2 Source 1, Source 2
V_{EN} = L	X	X	All transistors turned oFF

L = Low H = High X = DON't care
(*) Numbers referred to INPUT1 or INPUT2 controlled output stages

Although the device guarantees the absence of cross-conduction, the presence of the intrinsic diodes in the POWER DMOS structure causes the generation of current spikes on the sensing terminals. This is due to charge-discharge phenomena in the capacitors C1 & C2 associated with the drain source junctions (fig. 14). When the output switches from high to low, a current spike is generated associated with the capacitor C1. On the low-to-high transition a spike of the same polarity is generated by C2, preceded by a spike of the opposite polarity due to the charging of the input capacity of the lower POWER DMOS transistor (fig. 15).

Figure 14: Intrinsic Structures in the POWER DMOS Transistors

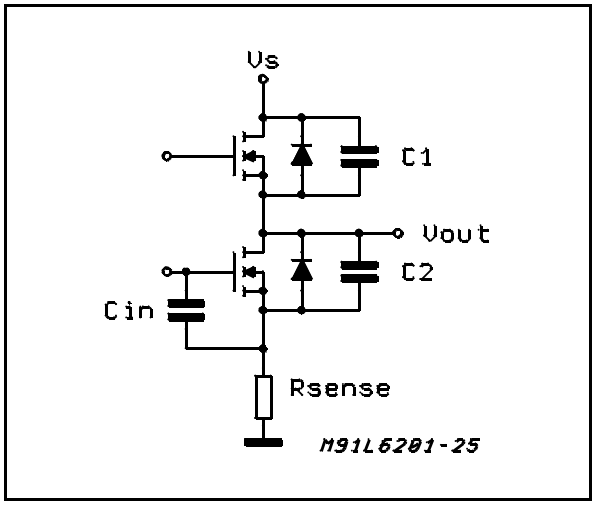

Figure 15: Current Typical Spikes on the Sensing Pin

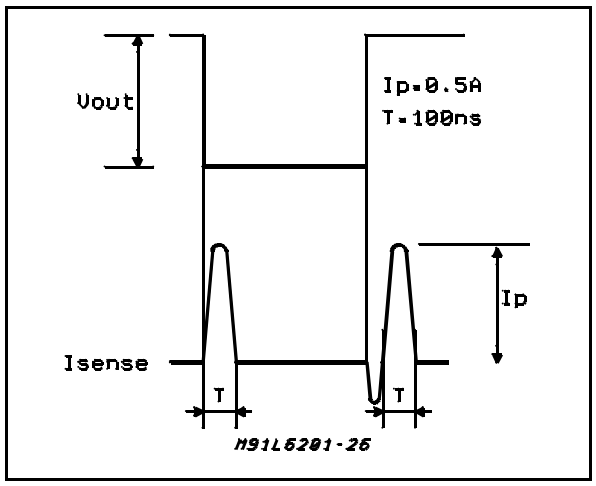

TRANSISTOR OPERATION

ON State

When one of the POWER DMOS transistor is ON it can be considered as a resistor $R_{DS\ (ON)}$ throughout the recommended operating range. In this condition the dissipated power is given by :

$$P_{ON} = R_{DS\ (ON)} \cdot I_{DS}^2 \text{ (RMS)}$$

The low $R_{DS\ (ON)}$ of the Multipower-BCD process can provide high currents with low power dissipation.

OFF State

When one of the POWER DMOS transistor is OFF the V_{DS} voltage is equal to the supply voltage and only the leakage current I_{DSS} flows. The power dissipation during this period is given by :

$$P_{OFF} = V_S \cdot I_{DSS}$$

The power dissipation is very low and is negligible in comparison to that dissipated in the ON STATE.

Transitions

As already seen above the transistors have an intrinsic diode between their source and drain that can operate as a fast freewheeling diode in switched mode applications. During recirculation with the ENABLE input high, the voltage drop across the transistor is $R_{DS\ (ON)} \cdot I_D$ and when it reaches the diode forward voltage it is clamped. When the ENABLE input is low, the POWER MOS is OFF and the diode carries all of the recirculation current. The power dissipated in the transitional times in the cycle depends upon the voltage-current waveforms and in the driving mode. (see Fig. 7ab and Fig. 8abc).

$$P_{trans.} = I_{DS}\ (t) \cdot V_{DS}\ (t)$$

Boostrap Capacitors

To ensure that the POWER DMOS transistors are driven correctly gate to source voltage of typ. 10 V must be guaranteed for all of the N-channel DMOS transistors. This is easy to be provided for the lower POWER DMOS transistors as their sources are refered to ground but a gate voltage greater than the supply voltage is necessary to drive the upper transistors. This is achieved by an internal charge pump circuit that guarantees correct DC drive in combination with the boostrap circuit. For efficient charging the value of the boostrap capacitor should be greater than the input capacitance of the power transistor which is around 1 nF. It is recommended that a capacitance of at least 10 nF is used for the bootstrap. If a smaller capacitor is used there is a risk that the POWER transistors will not be fully turned on and they will show a higher RDS (ON). On the other hand if a elevated value is used it is possible that a current spike may be produced in the sense resistor.

Reference Voltage

To by-pass the internal Ref. Volt. circuit it is recommended that a capacitor be placed between its pin and ground. A value of 0.22 µF should be sufficient for most applications. This pin is also protected against a short circuit to ground: a max. current of 2mA max. can be sinked out.

Dead Time

To protect the device against simultaneous conduction in both arms of the bridge resulting in a rail to rail short circuit, the integrated logic control provides a dead time greater than 40 ns.

Thermal Protection

A thermal protection circuit has been included that will disable the device if the junction temperature reaches 150 °C. When the temperature has fallen to a safe level the device restarts the input and enable signals under control.

APPLICATION INFORMATION

Recirculation

During recirculation with the ENABLE input high, the voltage drop across the transistor is RDS (ON)· IL, clamped at a voltage depending on the characteristics of the source-drain diode. Although the device is protected against cross conduction, current spikes can appear on the current sense pin due to charge/discharge phenomena in the intrinsic source drain capacitances. In the application this does not cause any problem because the voltage spike generated on the sense resistor is masked by the current controller circuit.

Rise Time T_r (See Fig. 16)

When a diagonal of the bridge is turned on current begins to flow in the inductive load until the maximum current I_L is reached after a time T_r. The dissipated energy $E_{OFF/ON}$ is in this case :

$$E_{OFF/ON} = [R_{DS\,(ON)} \cdot I_L^2 \cdot T_r] \cdot 2/3$$

Load Time T_{LD} (See Fig.16)

During this time the energy dissipated is due to the ON resistance of the transistors (E_{LD}) and due to commutation (E_{COM}). As two of the POWER DMOS transistors are ON, E_{ON} is given by :

$$E_{LD} = I_L^2 \cdot R_{DS\,(ON)} \cdot 2 \cdot T_{LD}$$

In the commutation the energy dissipated is :

$$E_{COM} = V_S \cdot I_L \cdot T_{COM} \cdot f_{SWITCH} \cdot T_{LD}$$

Where :

$T_{COM} = T_{TURN\text{-}ON} = T_{TURN\text{-}OFF}$

f_{SWITCH} = Chopping frequency.

Fall Time T_f (See Fig. 16)

It is assumed that the energy dissipated in this part of the cycle takes the same form as that shown for the rise time :

$$E_{ON/OFF} = [R_{DS\,(ON)} \cdot I_L^2 \cdot T_f] \cdot 2/3$$

Figure 16.

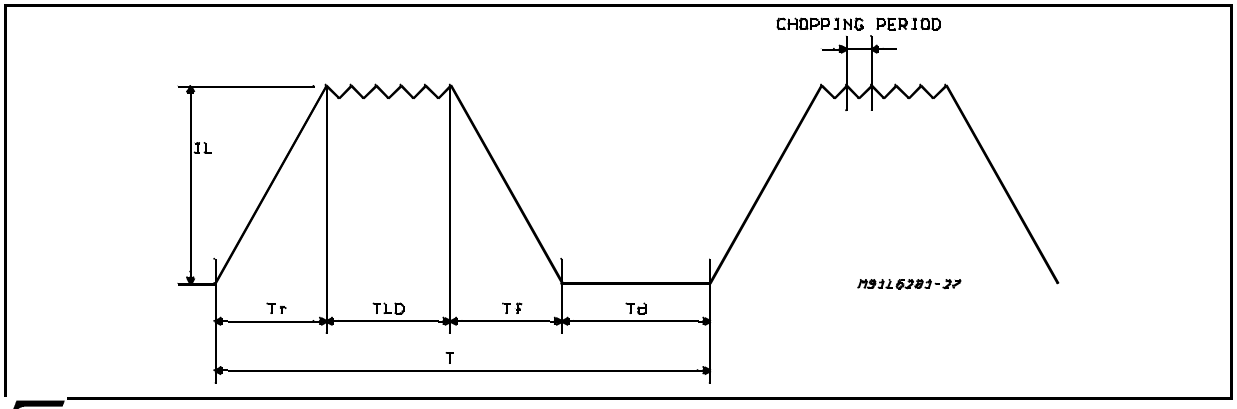

Quiescent Energy

The last contribution to the energy dissipation is due to the quiescent supply current and is given by:

$$E_{QUIESCENT} = I_{QUIESCENT} \cdot V_s \cdot T$$

Total Energy Per Cycle

$$E_{TOT} = E_{OFF/ON} + E_{LD} + E_{COM} + \\ + E_{ON/OFF} + E_{QUIESCENT}$$

The Total Power Dissipation P_{DIS} is simply :

$$P_{DIS} = E_{TOT}/T$$

T_r = Rise time

T_{LD} = Load drive time

T_f = Fall time

T_d = Dead time

T = Period

$T = T_r + T_{LD} + T_f + T_d$

DC Motor Speed Control

Since the I.C. integrates a full H-Bridge in a single package it is idealy suited for controlling DC motors. When used for DC motor control it performs the power stage required for both speed and direction control. The device can be combined with a current regulator like the L6506 to implement a transconductance amplifier for speed control, as shown in figure 17. In this particular configuration only half of the L6506 is used and the other half of the device may be used to control a second motor.

The L6506 senses the voltage across the sense resistor R_S to monitor the motor current: it compares the sensed voltage both to control the speed and during the brake of the motor.

Between the sense resistor and each sense input of the L6506 a resistor is recommended; if the connections between the outputs of the L6506 and the inputs of the L6203 need a long path, a resistor must be added between each input of the L6203 and ground.

A snubber network made by the series of R and C must be foreseen very near to the output pins of the I.C.; one diode (BYW98) is connected between each power output pin and ground as well.

The following formulas can be used to calculate the snubber values:

$R \cong V_S/I_p$

$C = I_p/(dV/dt)$ where:

V_S is the maximum Supply Voltage foreseen on the application;
I_p is the peak of the load current;
dv/dt is the limited rise time of the output voltage (200V/µs is generally used).

If the Power Supply Cannot Sink Current, a suitable large capacitor must be used and connected near the supply pin of the L6203. Sometimes a capacitor at pin 17 of the L6506 let the application better work. For motor current up to 2A max., the L6202 can be used in a similar circuit configuration for which a typical Supply Voltage of 24V is recommended.

Figure 17: Bidirectional DC Motor Control

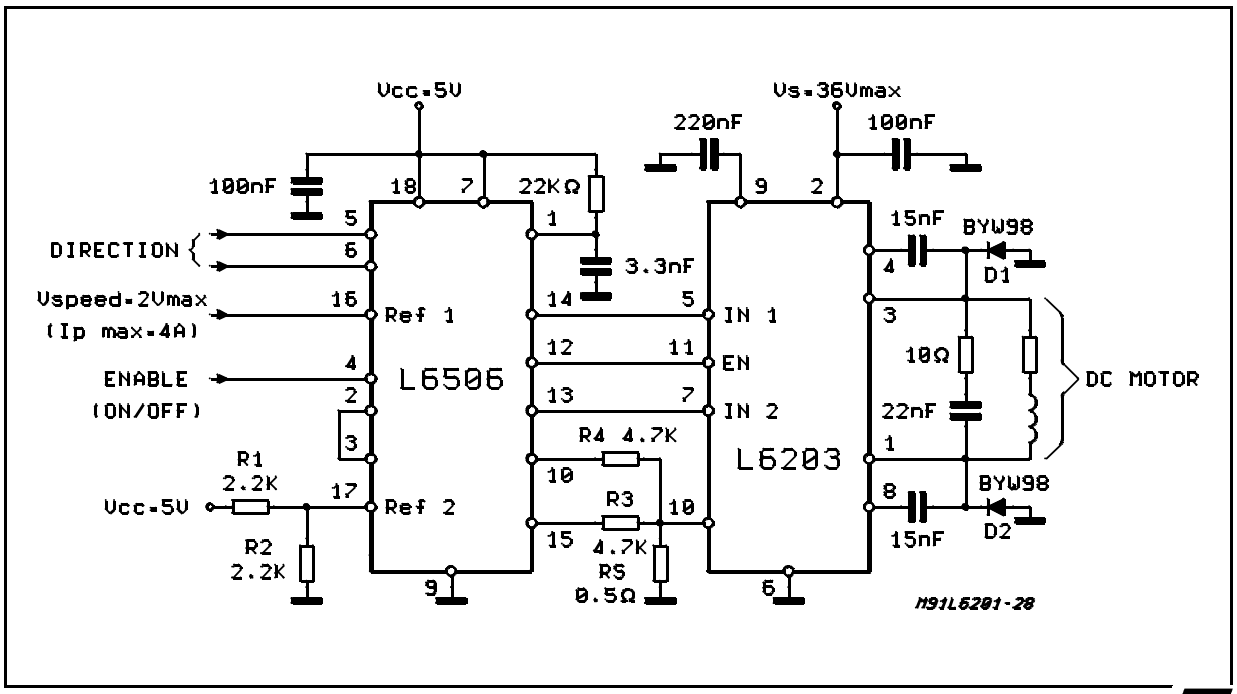

BIPOLAR STEPPER MOTORS APPLICATIONS

Bipolar stepper motors can be driven with one L6506 or L297, two full bridge BCD drivers and very few external components. Together these three chips form a complete microprocessor-to-stepper motor interface is realized.

As shown in Fig. 18 and Fig. 19, the controller connect directly to the two bridge BCD drivers. External component are minimalized: an R.C. network to set the chopper frequency, a resistive divider (R1; R2) to establish the comparator reference voltage and a snubber network made by R and C in series (See DC Motor Speed Control).

Figure 18: Two Phase Bipolar Stepper Motor Control Circuit with Chopper Current Control

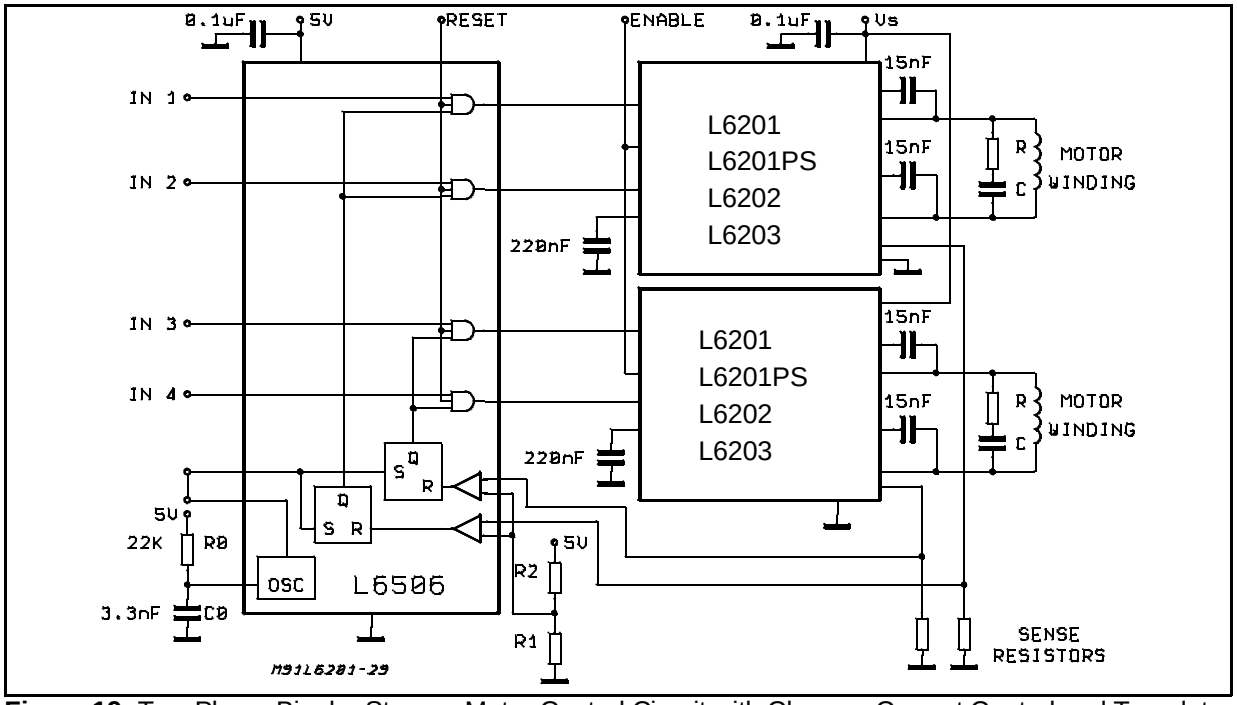

Figure 19: Two Phase Bipolar Stepper Motor Control Circuit with Chopper Current Control and Translator

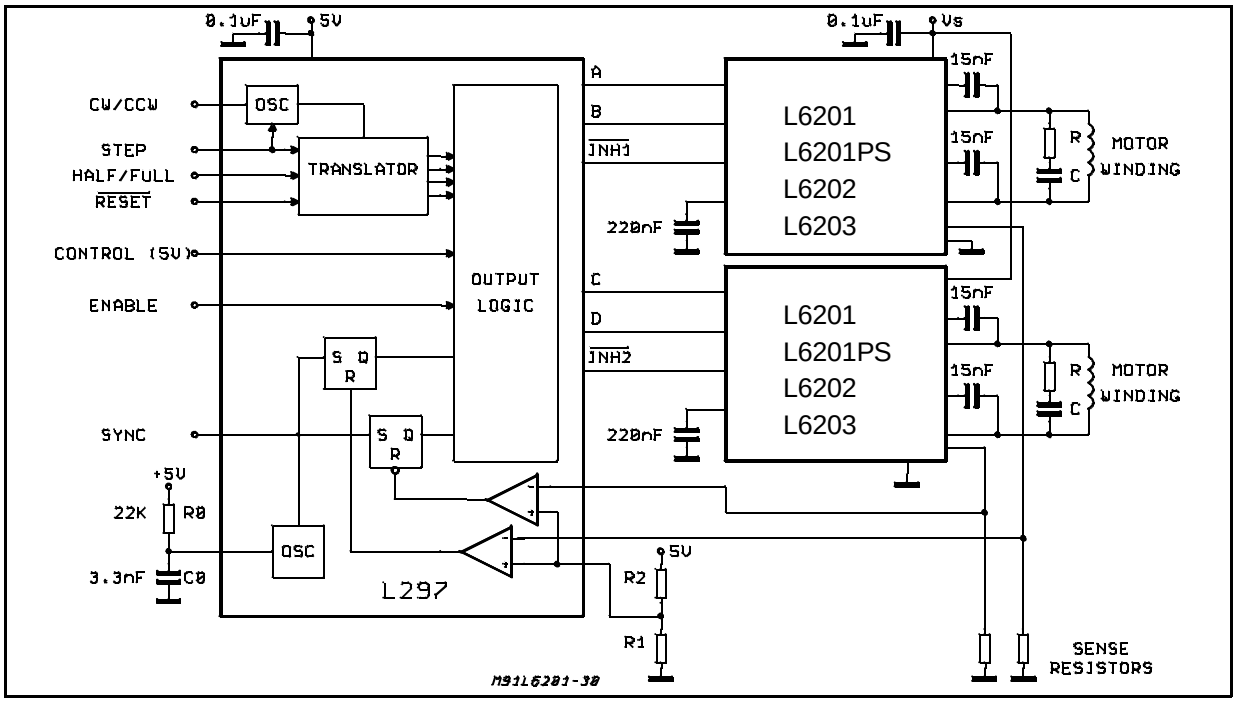

It could be requested to drive a motor at V_S lower than the minimum recommended one of 12V (See Electrical Characteristics); in this case, by accepting a possible small increas in the $R_{DS\ (ON)}$ resistance of the power output transistors at the lowest Supply Voltage value, may be a good solution the one shown in Fig. 20.

Figure 20: L6201/1P/2/3 Used at a Supply Voltage Range Between 9 and 18V

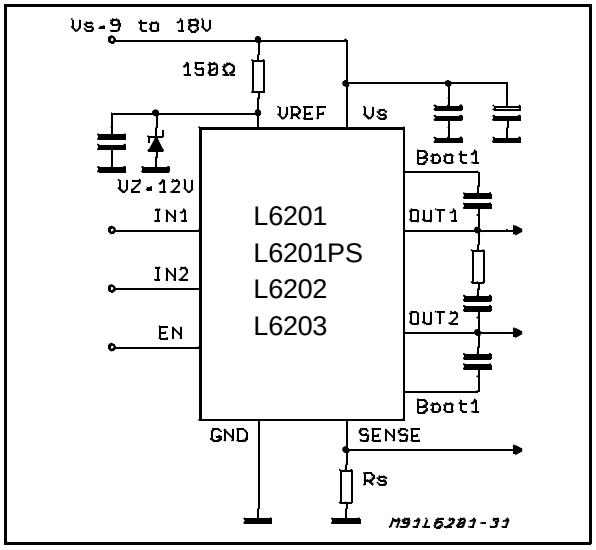

THERMAL CHARACTERISTICS

Thanks to the high efficiency of this device, often a true heatsink is not needed or it is simply obtained by means of a copper side on the P.C.B. (L6201/2).
Under heavy conditions, the L6203 needs a suitable cooling.
By using two square copper sides in a similar way as it shown in Fig. 23, Fig. 21 indicates how to choose the on board heatsink area when the L6201 total power dissipation is known since:

$$R_{Th\ j\text{-}amb} = (T_{j\ max.} - T_{amb\ max}) / P_{tot}$$

Figure 22 shows the Transient Thermal Resistance vs. a single pulse time width.
Figure 23 and 24 refer to the L6202.
For the Multiwatt L6203 addition information is given by Figure 25 (Thermal Resistance Junction-Ambient vs. Total Power Dissipation) and Figure 26 (Peak Transient Thermal Resistance vs. Repetitive Pulse Width) while Figure 27 refers to the single pulse Transient Thermal Resistance.

Figure 21: Typical $R_{Th\ J\text{-}amb}$ vs. "On Board" Heatsink Area (L6201)

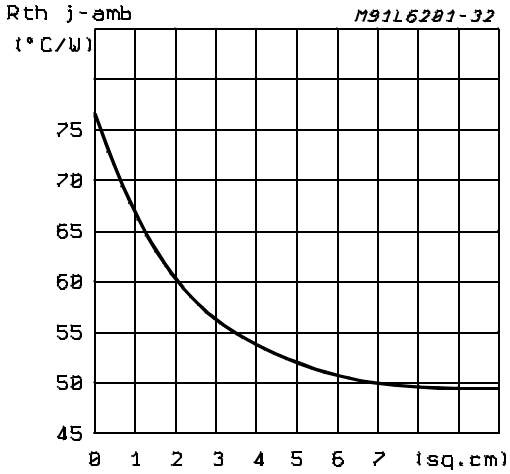

Figure 22: Typical Transient R_{TH} in Single Pulse Condition (L6201)

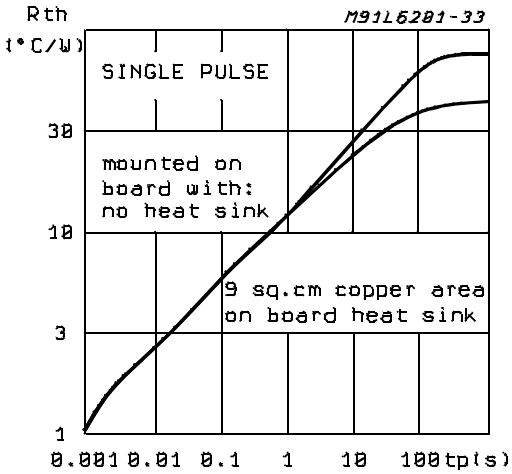

Figurre 23: Typical $R_{Th\ J\text{-}amb}$ vs. Two "On Board" Square Heatsink (L6202)

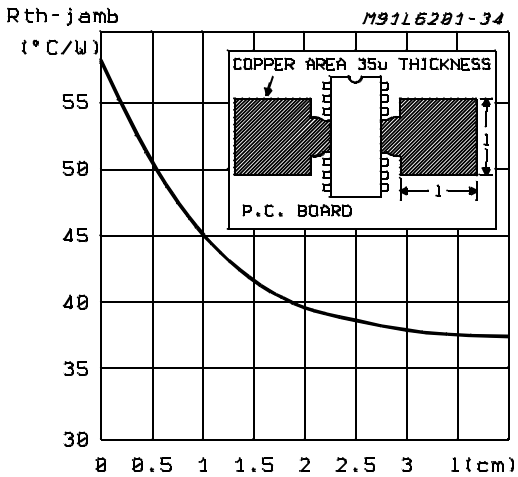

Figure 24: Typical Transient Thermal Resistance for Single Pulses (L6202)

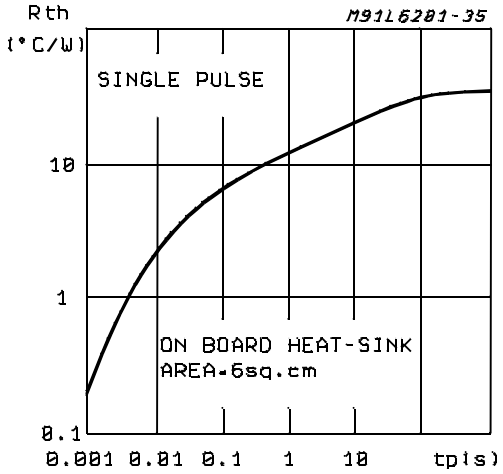

Figure 25: Typical $R_{Th\ J\text{-}amb}$ of Multiwatt Package vs. Total Power Dissipation

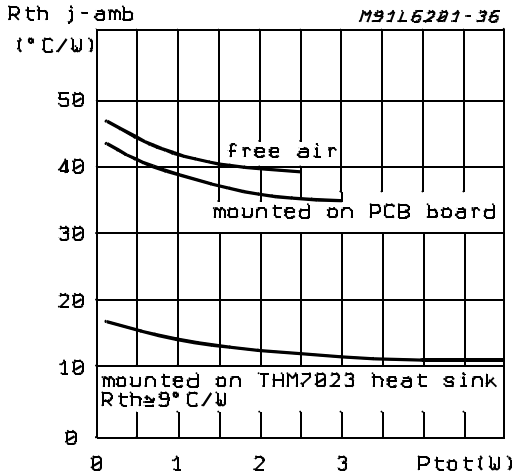

Figure 26: Typical Transient Thermal Resistance for Single Pulses with and without Heatsink (L6203)

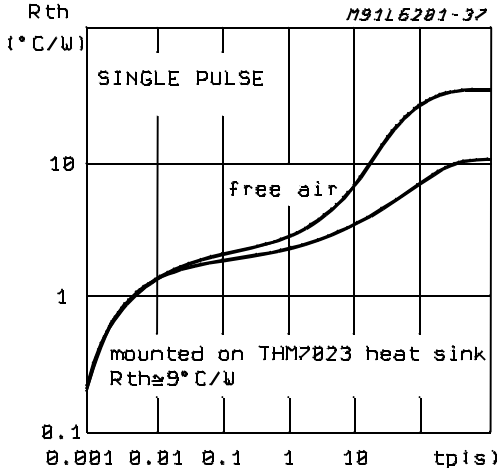

Figure 27: Typical Transient Thermal Resistance versus Pulse Width and Duty Cycle (L6203)

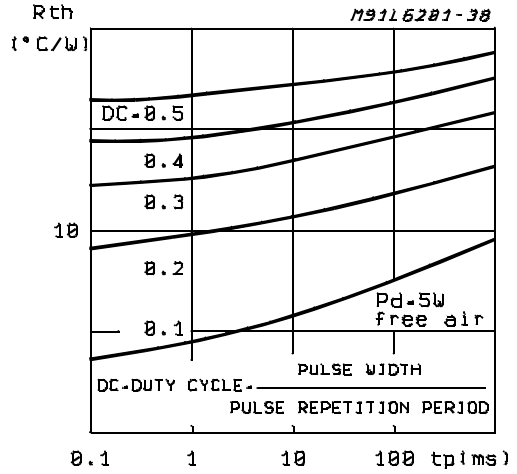

DIM.	mm			inch		
	MIN.	TYP.	MAX.	MIN.	TYP.	MAX.
a1	0.51			0.020		
B	0.85		1.40	0.033		0.055
b		0.50			0.020	
b1	0.38		0.50	0.015		0.020
D			24.80			0.976
E		8.80			0.346	
e		2.54			0.100	
e3		20.32			0.800	
F			7.10			0.280
I			5.10			0.201
L		3.30			0.130	
Z			2.54			0.100

OUTLINE AND MECHANICAL DATA

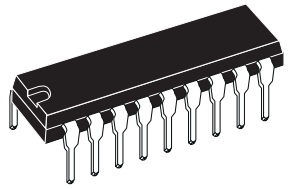

Powerdip 18

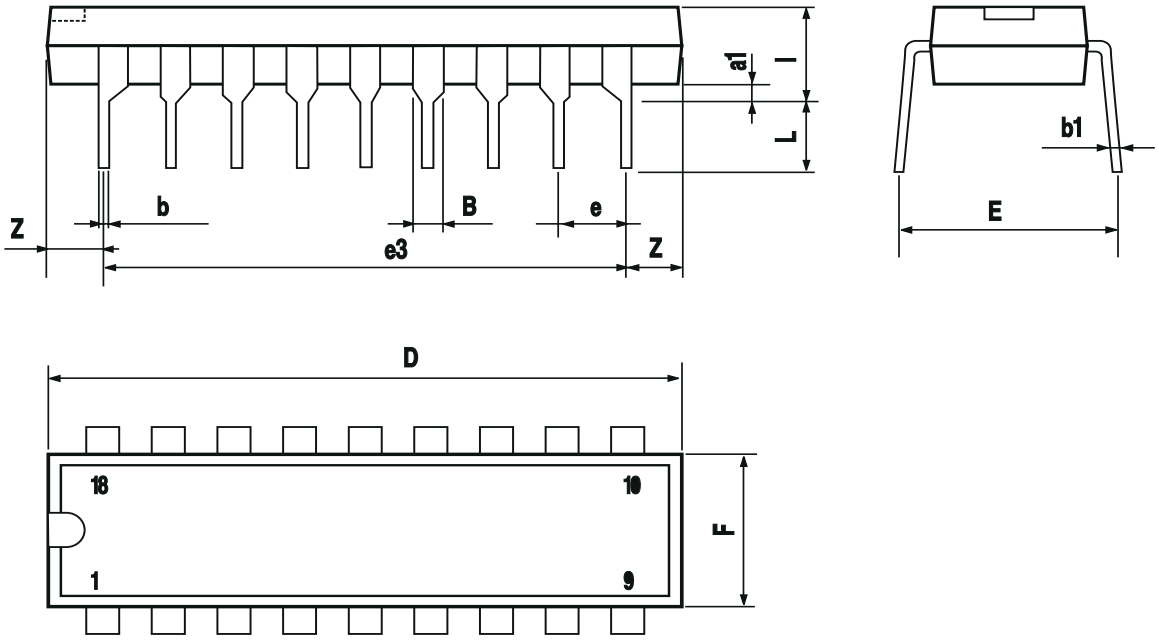

DIM.	mm			inch		
	MIN.	TYP.	MAX.	MIN.	TYP.	MAX.
A	2.35		2.65	0.093		0.104
A1	0.1		0.3	0.004		0.012
B	0.33		0.51	0.013		0.020
C	0.23		0.32	0.009		0.013
D	12.6		13	0.496		0.512
E	7.4		7.6	0.291		0.299
e		1.27			0.050	
H	10		10.65	0.394		0.419
h	0.25		0.75	0.010		0.030
L	0.4		1.27	0.016		0.050
K	0° (min.)8° (max.)					

OUTLINE AND MECHANICAL DATA

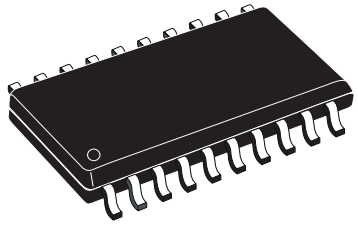

SO20

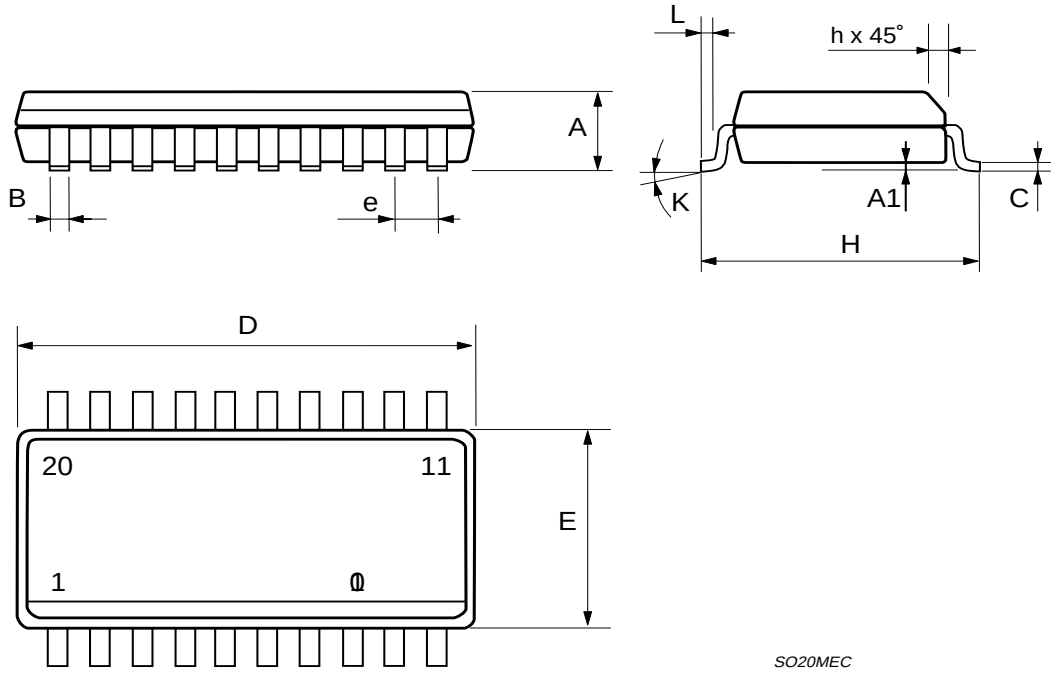

DIM.	mm			inch		
	MIN.	TYP.	MAX.	MIN.	TYP.	MAX.
A			3.6			0.142
a1	0.1		0.3	0.004		0.012
a2			3.3			0.130
a3	0		0.1	0.000		0.004
b	0.4		0.53	0.016		0.021
c	0.23		0.32	0.009		0.013
D (1)	15.8		16	0.622		0.630
D1	9.4		9.8	0.370		0.386
E	13.9		14.5	0.547		0.570
e		1.27			0.050	
e3		11.43			0.450	
E1 (1)	10.9		11.1	0.429		0.437
E2			2.9			0.114
E3	5.8		6.2	0.228		0.244
G	0		0.1	0.000		0.004
H	15.5		15.9	0.610		0.626
h			1.1			0.043
L	0.8		1.1	0.031		0.043
N	8° (typ.)					
S	8° (max.)					
T		10			0.394	

(1) “D and E1” do not include mold flash or protusions.
- Mold flash or protusions shall not exceed 0.15mm (0.006”)
- Critical dimensions: “E”, “G” and “a3”.

OUTLINE AND MECHANICAL DATA

Weight: 1.9gr

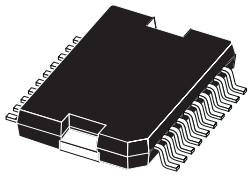

JEDEC MO-166

PowerSO20

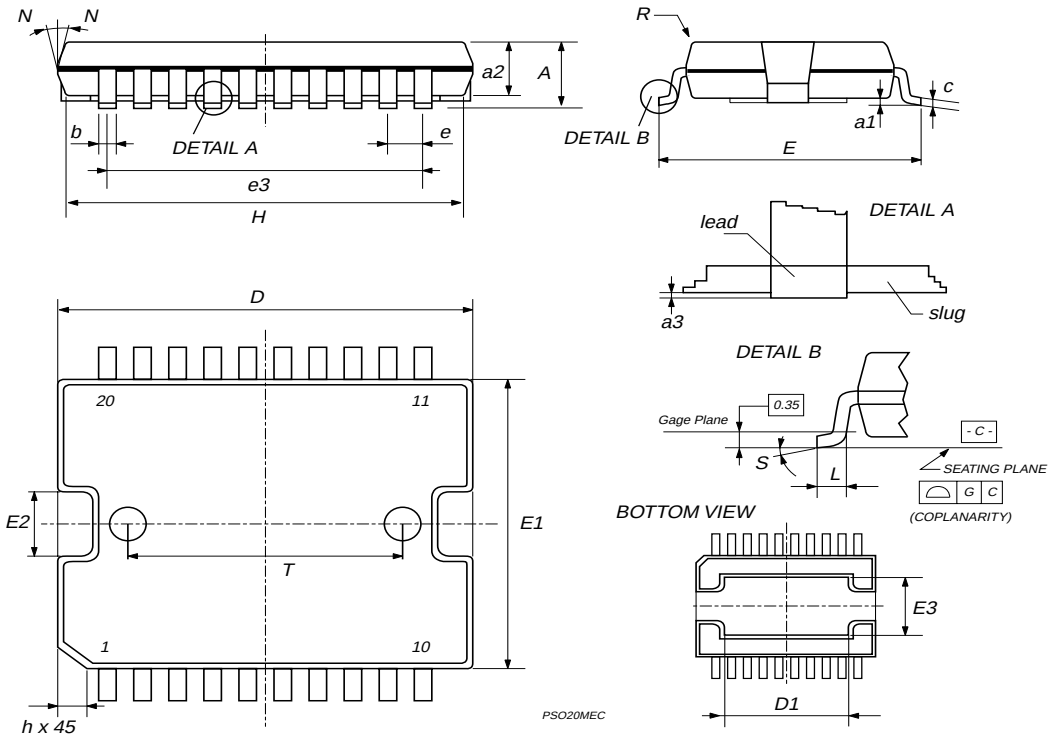

0056635

DIM.	mm			inch		
	MIN.	TYP.	MAX.	MIN.	TYP.	MAX.
A			5			0.197
B			2.65			0.104
C			1.6			0.063
D		1			0.039	
E	0.49		0.55	0.019		0.022
F	0.88		0.95	0.035		0.037
G	1.45	1.7	1.95	0.057	0.067	0.077
G1	16.75	17	17.25	0.659	0.669	0.679
H1	19.6			0.772		
H2			20.2			0.795
L	21.9	22.2	22.5	0.862	0.874	0.886
L1	21.7	22.1	22.5	0.854	0.87	0.886
L2	17.4		18.1	0.685		0.713
L3	17.25	17.5	17.75	0.679	0.689	0.699
L4	10.3	10.7	10.9	0.406	0.421	0.429
L7	2.65		2.9	0.104		0.114
M	4.25	4.55	4.85	0.167	0.179	0.191
M1	4.73	5.08	5.43	0.186	0.200	0.214
S	1.9		2.6	0.075		0.102
S1	1.9		2.6	0.075		0.102
Dia1	3.65		3.85	0.144		0.152

OUTLINE AND MECHANICAL DATA

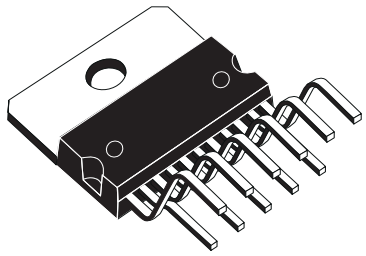

Multiwatt11 V

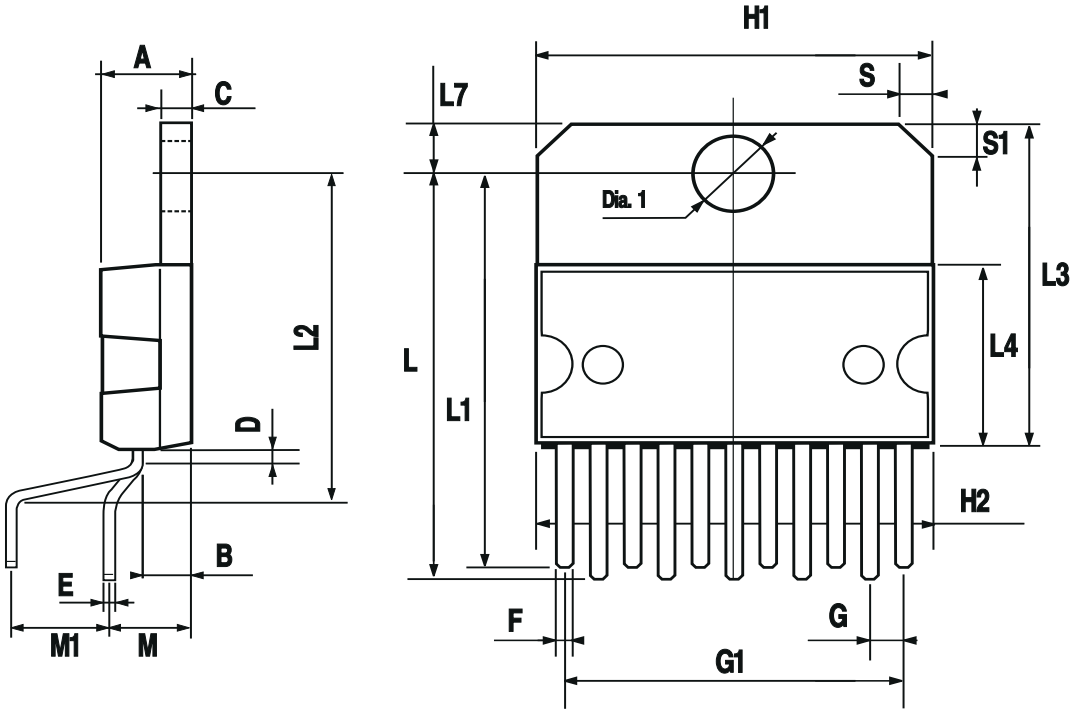

Information furnished is believed to be accurate and reliable. However, STMicroelectronics assumes no responsibility for the consequences of use of such information nor for any infringement of patents or other rights of third parties which may result from its use. No license is granted by implication or otherwise under any patent or patent rights of STMicroelectronics. Specification mentioned in this publication are subject to change without notice. This publication supersedes and replaces all information previously supplied. STMicroelectronics products are not authorized for use as critical components in life support devices or systems without express written approval of STMicroelectronics.

The ST logo is a registered trademark of STMicroelectronics

© 2003 STMicroelectronics – Printed in Italy – All Rights Reserved

STMicroelectronics GROUP OF COMPANIES

Australia - Brazil - Canada - China - Finland - France - Germany - Hong Kong - India - Israel - Italy - Japan - Malaysia - Malta - Morocco - Singapore - Spain - Sweden - Switzerland - United Kingdom - United States.

http://www.st.com