Honeywell

TruStability® Board Mount Pressure Sensors: NSC Series– Uncompensated/Unamplified

Uncompensated/Unamplified Millivolt Analog Output, 1 psi to 150 psi (60 mbar to 10 bar)

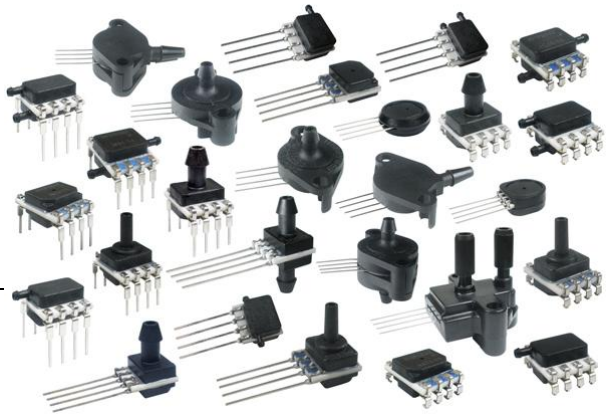

DESCRIPTION

The TruStability® NSC Series-Uncompensated/Unamplified is a piezoresistive silicon pressure sensor offering a ratiometric analog output for reading pressure over the specified full scale pressure span and temperature range.

The NSC Series is both unamplified and uncompensated. It offers infinite resolution on the pressure signal. Frequency response is limited only by the end user's system. The sensor will operate as specified from -40 °C to 85 °C [-40 °F to 185 °F].

These products are ideal for those customers who want to do their own compensation, calibration, and amplification in order to make use of the maximum resolution of the bare sensor output, leveraging a custom algorithm required for the application.

The NSC Series allows customers the flexibility of self-calibration while still benefiting from the industry-leading stability, accuracy, and repeatability that the Honeywell TruStability® Pressure Sensors provide.

Additionally, the NSC Series offers numerous package styles and mounting options, making it easier for the device manufacturer to integrate the product into their application.

These sensors measure absolute, differential, and gage pressures. The absolute versions have an internal vacuum reference and an output value proportional to absolute pressure. Differential versions allow application of pressure to either side of the sensing diaphragm. Gage versions are referenced to atmospheric pressure and provide an output proportional to pressure variations from atmosphere.

The NSC Series sensors are intended for use with non-corrosive, non-ionic gases, such as air and other dry gases and for non-corrosive, non-ionic liquids. All products are designed and manufactured according to ISO 9001.

FEATURES AND BENEFITS (★=competitive differentiator)

- ★ Industry-leading long-term stability: Even after long-term use and thermal extremes, these sensors perform substantially better relative to stability than any other pressure sensor available in the industry today:
  - Minimizes system calibration needs and maximizes system performance
  - Helps support system uptime by eliminating the need to service or replace the sensor during its application life
- ★ Industry-leading accuracy: Extremely tight accuracy of ±0.25 %FSS BFSL:
  - Reduces software needs to correct system inaccuracies, minimizing system design time
  - Supports system accuracy and warranty requirements
  - Helps to optimize system uptime

sales@prom-elec.com / ООО ПРОМЭЛЕКТРОНИКА

TruStability® Board Mount Pressure Sensors: NSC Series– Uncompensated/Unamplified

FEATURES AND BENEFITS (★=competitive differentiator) (continued)

★ Industry-leading flexibility:
- Modular, flexible design with numerous package styles, pressure ports, and options simplify integration into the device manufacturer's application
- Single side wet media option allows the end customer to use one port of the sensor with condensing humidity or directly with non-corrosive liquid media

★ Small size: Miniature 10 x 10 mm [0.39 x 0.39 in] package is very small when compared to most board mount pressure sensors
- Occupies less area on the PCB
- Typically allows for easy placement on crowded PCBs or in small devices

★ Repeatability: Provides excellent repeatability, high accuracy and reliability under many demanding conditions

- Extremely low power consumption (operating supply voltage as low as 1.8 Vdc):
  - Reduces power consumption
  - Provides extended battery life
  - Promotes energy efficiency
- Low operating voltage
- Sensitive: Meets specified pressure level requirements, providing enhanced sensitivity and accuracy over the range
- Virtually insensitive to mounting orientation, allowing for flexibility of use with the application
- Ratiometric analog output
- Infinite resolution
- Fast response time
- RoHS compliant
- Absolute, differential and gage types
- Pressure ranges from 1 psi to 150 psi (60 mbar to 10 bar)
- Also available in the HSC Series and the SSC Series which are fully compensated and calibrated with amplified analog or digital I^2C or SPI outputs

POTENTIAL APPLICATIONS (★=focus applications)

Medical:

- Respiratory breathing circuits:
  - Nebulizers
  - Spirometers
  - Patient monitoring
- Flow/pressure control:
  - Therapeutic hospital beds
- Gas collection/delivery:
  - ★ Hospital gas supply
  - Oxygen concentrators
- Precise sampling/gas flow:
  - ★ Blood analysis
  - ★ Gas chromatography
  - ★ Analytical instrument sampling systems

Industrial:

- Pneumatic components:
  - ★ Valves
  - ★ Pumps
  - ★ Actuators
- Pneumatic systems:
  - ★ HVAC transmitters
  - ★ Automated pneumatic assembly equipment
  - ★ Pneumatic operator control systems
- Gas collection/delivery:
  - ★ Industrial gas supply
- Precise sampling/gas flow:
  - ★ Barometry
  - ★ Gas chromatography
  - ★ Analytical instrument sampling systems

Table 1. Absolute Maximum Ratings[1]

Parameter	Min.	Max.	Unit
Supply voltage (V_{supply})	-12.0	12.0	Vdc
ESD susceptibility (human body model)	3	–	kV
Storage temperature	-40 [-40]	85 [185]	°C [°F]
Soldering time and temperature:			
Lead solder temperature (SIP, DIP)	4 s max. at 250 °C [482 °F]		
Peak reflow temperature (SMT)	15 s max. at 250 °C [482 °F]		

Table 2. Operating Specifications

Parameter	Min.	Typ.	Max.	Unit
Supply voltage (V_{supply})[2]	1.8	5.0[3]	12.0	Vdc
Supply current (at 5.0 Vdc supply)	–	1.5	2	mA
Specified temperature range[4]	-40 [-40]	–	85 [185]	°C [°F]
Startup time	–	–	5	ms
Accuracy[5]	–	–	±0.25	%FSS BFSL[6]

Table 3. Environmental Specifications

Parameter	Characteristic
Humidity	0% to 95% RH, non-condensing
Vibration	MIL-STD-202F, Curve AK (20.7 g random)
Shock	MIL-STD-202F, Method 213B, Condition F
Life[7]	1 million pressure cycles minimum
Solder reflow	J-STD-020-C

Table 4. Wetted Materials[8]

Parameter	Port 1 (Pressure Port)	Port 2 (Reference Port)
Covers	high temperature polyamide	high temperature polyamide
Substrate	alumina ceramic	alumina ceramic
Adhesives	epoxy, RTV	epoxy, RTV
Electronic components	ceramic, silicon	silicon, glass, gold, solder

Notes:

1. Absolute maximum ratings are the extreme limits the device will withstand without damage.
2. Ratiometricity of the sensor (the ability of the device output to scale to the supply voltage) is achieved within the specified operating voltage.
3. Incorrect application of supply voltage or ground to the wrong pin may cause electrical failure.
4. The specified temperature range is the temperature range over which the sensor will produce an output proportional to pressure within the specified performance limits.
5. Accuracy: The maximum deviation in output from a Best Fit Straight Line (BFSL) fitted to the output measured over the pressure range at 25 °C [77 °F]. Includes all errors due to pressure non-linearity, pressure hysteresis, and non-repeatability.
6. Full Scale Span (FSS) is the algebraic difference between the output signal measured at the maximum ($P_{max.}$) and minimum ($P_{min.}$) limits of the pressure range. (See Figure 1 for ranges.)
7. Life may vary depending on specific application in which sensor is utilized.
8. Contact Honeywell Customer Service for detailed material information.

CAUTION

PRODUCT DAMAGE

- Ensure liquid media is applied to Port 1 only; Port 2 is not compatible with liquids.
- Ensure liquid media contains no particulates. All TruStability® sensors are dead-ended devices. Particulates can accumulate inside the sensor, causing damage or affecting sensor output.
- Recommend that the sensor be positioned with Port 1 facing downwards; any particulates in the system are less likely to enter and settle within the pressure sensor if it is in this position.
- Ensure liquid media does not create a residue when dried; build-up inside the sensor may affect sensor output. Rinsing of a dead-ended sensor is difficult and has limited effectiveness for removing residue.
- Ensure liquid media are compatible with wetted materials. Non-compatible liquid media will degrade sensor performance and may lead to sensor failure.

Failure to comply with these instructions may result in product damage.

PATENTS

Protected by one or more of the following patents: 7531426, 5360521, 7216547, 7677109; App 20110107839.

TruStability® Board Mount Pressure Sensors: NSC Series– Uncompensated/Unamplified

Figure 1. Nomenclature and Order Guide

NSC _ _ _ **N** _ _ _ _ _ **U** **N** **V**

Series

Package
D = DIP (Dual Inline Pin)
M = SMT (Surface Mount Technology)
S = SIP (Single Inline Pin)

Supply Voltage
V = Constant

Compensation
N = Uncompensated

Amplification
U = Unamplified

Pressure Port (* indicates not available)

DIP	*SMT*	*SIP*
NN = No ports	**NN** = No ports	**NN** = No ports
*	*	**AA** = Dual axial barbed ports, opposite sides
AN = Single axial barbed port	**AN** = Single axial barbed port	**AN** = Single axial barbed port
LN = Single axial barbless port	**LN** = Single axial barbless port	**LN** = Single axial barbless port
*	*	**FF** = Fastener mount, dual axial barbed ports, opposite sides
*	*	**FN** = Fastener mount, single axial barbed port
*	*	**GN** = Ribbed fastener mount, single axial barbed port
*	*	**NB** = Fastener mount, dual axial ports, same side
RN = Single radial barbed port	**RN** = Single radial barbed port	**RN** = Single radial barbed port
RR = Dual radial barbed ports, same side	**RR** = Dual radial barbed ports, same side	**RR** = Dual radial barbed ports, same side
DR = Dual radial barbed ports, opposite sides	**DR** =Dual radial barbed ports, opposite sides	**DR** = Dual radial barbed ports, opposite sides
*	*	**HH** = Fastener mount, dual radial barbed ports, same side
*	*	**HN** = Fastener mount, single radial barbed port
*	*	**MN** = Manifold mount, outer diameter seal
*	*	**SN** = Manifold mount, inner diameter seal

Pressure Range[9]

1 psi to 150 psi	*60 mbar to 10 bar*
Absolute	***Absolute***
015PA = 0 psi to 15 psi	**001BA** = 0 bar to 1 bar
030PA = 0 psi to 30 psi	**1.6BA** = 0 bar to 1.6 bar
060PA = 0 psi to 60 psi	**2.5BA** = 0 bar to 2.5 bar
100PA = 0 psi to 100 psi	**004BA** = 0 bar to 4 bar
150PA = 0 psi to 150 psi	**006BA** = 0 bar to 6 bar
	010BA = 0 bar to 10 bar
Differential	***Differential***
001PD = ±1 psi	**060MD** = ±60 mbar
005PD = ±5 psi	**100MD** = ±100 mbar
015PD = ±15 psi	**160MD** = ±160 mbar
030PD = ±30 psi	**250MD** = ±250 mbar
060PD = ±60 psi	**400MD** = ±400 mbar
100PD = ±100 psi	**600MD** = ±600 mbar
150PD = ±150 psi	**001BD** = ±1 bar
	1.6BD = ±1.6 bar
Gage	**2.5BD** = ±2.5 bar
001PG = 0 psi to 1 psi	**004BD** = ±4 bar
005PG = 0 psi to 5 psi	**006BD** = ±6 bar
015PG = 0 psi to 15 psi	**010BD** = ±10 bar
030PG = 0 psi to 30 psi	
060PG = 0 psi to 60 psi	
100PG = 0 psi to 100 psi	***Gage***
150PG = 0 psi to 150 psi	**060MG** = 0 mbar to 60 mbar
	100MG = 0 mbar to 100 mbar
	160MG = 0 mbar to 160 mbar
	250MG = 0 mbar to 250 mbar
	400MG = 0 mbar to 400 mbar
	600MG = 0 mbar to 600 mbar
	001BG = 0 bar to 1 bar
	1.6BG = 0 bar to 1.6 bar
	2.5BG = 0 bar to 2.5 bar
	004BG = 0 bar to 4 bar
	006BG = 0 bar to 6 bar
	010BG = 0 bar to 10 bar

Options
N = No special options

Note:
9. See Table 5 for an explanation of sensor pressure types.

Figure 2. Completed Catalog Listing Example

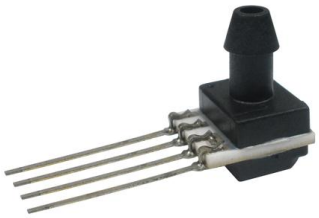

NSCSANN100PGUNV
SIP package, AN pressure port, no options, 100 psi gage, analog output, unamplified, uncompensated, constant voltage

NSCSANN100PGUNV Nominal 25 °C Output vs Pressure

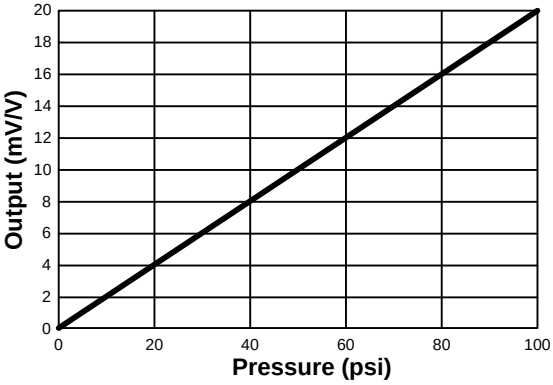

Table 5. Pressure Types

Pressure Type	Description
Absolute	Output is proportional to the difference between applied pressure and a built-in reference to vacuum. Reference pressure is absolute zero pressure (full vacuum).
Differential	Output is proportional to the difference between the pressures applied to each port. (Port 1 – Port 2) Reference pressure is Port 1 = Port 2.
Gage	Output is proportional to the difference between applied pressure and atmospheric (ambient) pressure. Reference pressure is atmospheric pressure.

Table 6. Pressure Range Specifications for 1 psi to 150 psi

Pressure Range (see Figure 1)	Pressure Range		Unit	Over Pressure	Burst Pressure	Common Mode Pressure	Offset[10] (mV/V)		Sensitivity (mV/V/Full Scale Span)			TCO[11] (%FSS/25 °C)			TCS[12] (%FSS/25 °C)			Bridge Resistance[13] (kOhm)			TCR[14] (-40 °C to 25 °C) (ppm/°C)		TCR[15] (25 °C to 85 °C) (ppm/°C)		Long-term Stability (1000 hr, 25 °C [77 °F]) (%FSS)
	Pmin.	Pmax.					Min.	Max.	Min.	Nom.	Max.	Min.	Nom.	Max.	Min.	Nom.	Max.	Min.	Nom.	Max.	Min.	Max.	Min.	Max.	
Absolute																									
015PA	0	15	psi	30	60	N/A	-6.0	6.0	10.3	15.0	19.7	-3.6	0.0	3.6	-7.5	-5.0	-3.0	2.6	3.5	4.4	500	1500	1500	2500	±0.25%
030PA	0	30	psi	60	120	N/A	-6.0	6.0	9.9	14.8	19.7	-3.8	0.0	3.8	-7.5	-5.0	-3.0	2.6	3.5	4.4	500	1500	1500	2500	±0.25%
060PA	0	60	psi	120	250	N/A	-6.0	6.0	10.7	15.2	19.7	-3.5	0.0	3.5	-7.5	-5.0	-3.0	2.6	3.5	4.4	500	1500	1500	2500	±0.25%
100PA	0	100	psi	250	250	N/A	-6.0	6.0	9.1	12.6	16.1	-4.1	0.0	4.1	-7.5	-5.0	-3.0	2.6	3.5	4.4	500	1500	1500	2500	±0.25%
150PA	0	150	psi	250	250	N/A	-6.0	6.0	13.6	18.9	24.2	-2.8	0.0	2.8	-7.5	-5.0	-3.0	2.6	3.5	4.4	500	1500	1500	2500	±0.25%
Differential																									
001PD	-1	1	psi	5	20	150	-8.5	3.5	9.0	13.0	17.0	-1.1	0.5	1.1	-6.3	-5.0	-3.8	4	5	6	1200	2200	2200	3200	±0.35%
005PD	-5	5	psi	20	40	150	-8.5	3.5	20.0	30.0	40.0	-0.6	0.2	0.6	-6.3	-5.0	-3.8	4	5	6	1200	2200	2200	3200	±0.35%
015PD	-15	15	psi	30	60	150	-7.0	5.3	20.7	31.0	41.4	-0.6	0.3	0.5	-6.0	-5.0	-3.8	2.4	3	5.5	1200	2200	2200	3200	±0.25%
030PD	-30	30	psi	60	120	150	-7.0	5.3	31.0	41.4	51.7	-0.3	0.2	0.3	-6.0	-5.0	-3.8	2.4	3	5.5	1200	2200	2200	3200	±0.25%
060PD	-60	60	psi	120	250	250	-7.0	5.3	34.8	41.4	48.0	-0.3	0.2	0.3	-6.0	-5.0	-3.8	2.4	3	5.5	1200	2200	2200	3200	±0.25%
100PD	-100	100	psi	250	250	250	-7.0	5.3	29.0	34.5	40.0	-0.3	0.3	0.3	-6.0	-5.0	-3.8	2.4	3	5.5	1200	2200	2200	3200	±0.25%
150PD	-150	150	psi	250	250	250	-7.0	5.3	43.4	51.7	60.0	-0.2	0.2	0.2	-6.0	-5.0	-3.8	2.4	3	5.5	1200	2200	2200	3200	±0.25%
Gage																									
001PG	0	1	psi	5	20	150	-8.5	3.5	4.5	6.5	8.5	-2.2	1.0	2.2	-6.3	-5.0	-3.8	4	5	6	1200	2200	2200	3200	±0.35%
005PG	0	5	psi	20	40	150	-8.5	3.6	10.0	15.0	20.0	-1.0	0.4	1.0	-6.3	-5.0	-3.8	4	5	6	1200	2200	2200	3200	±0.35%
015PG	0	15	psi	30	60	150	-7.0	5.3	10.3	15.5	20.7	-1.0	0.6	1.0	-6.0	-5.0	-3.8	2.4	3	5.5	1200	2200	2200	3200	±0.25%
030PG	0	30	psi	60	120	150	-7.0	5.3	15.5	20.7	25.9	-0.6	0.4	0.6	-6.0	-5.0	-3.8	2.4	3	5.5	1200	2200	2200	3200	±0.25%
060PG	0	60	psi	120	250	250	-7.0	5.3	17.4	20.7	24.0	-0.6	0.4	0.6	-6.0	-5.0	-3.8	2.4	3	5.5	1200	2200	2200	3200	±0.25%
100PG	0	100	psi	250	250	250	-7.0	5.3	14.5	17.2	20.0	-0.7	0.5	0.7	-6.0	-5.0	-3.8	2.4	3	5.5	1200	2200	2200	3200	±0.25%
150PG	0	150	psi	250	250	250	-7.0	5.3	21.7	25.9	30.0	-0.6	0.3	0.6	-6.0	-5.0	-3.8	2.4	3	5.5	1200	2200	2200	3200	±0.25%

TruStability® Board Mount Pressure Sensors: NSC Series– Uncompensated/Unamplified

Table 7. Pressure Range Specifications for 60 mbar to 10 bar

Pressure Range (see Figure 1)	Pressure Range		Unit	Over Pressure	Burst Pressure	Common Mode Pressure	Offset[10] (mV/V)		Sensitivity (mV/V/Full Scale Span)			TCO[11] (%FSS/25 °C)			TCS[12] (%FSS/25 °C)			Bridge Resistance[13] (kOhm)			TCR[14] (-40 °C to 25 °C) (ppm/°C)		TCR[15] (25 °C to 85 °C) (ppm/°C)		Long-term Stability (1000 hr, 25 °C [77 °F]) (%FSS)
	Pmin.	Pmax.					Min.	Max.	Min.	Nom.	Max.	Min.	Nom.	Max.	Min.	Nom.	Max.	Min.	Nom.	Max.	Min.	Max.	Min.	Max.	
Absolute																									
001BA	0	1	bar	2	4	N/A	-6.0	6.0	10.0	14.5	19.0	-3.8	0.0	3.8	-7.5	-5.0	-3.0	2.6	3.5	4.4	500	1500	1500	2500	±0.25%
1.6BA	0	1.6	bar	4.1	8	N/A	-6.0	6.0	7.7	11.4	15.2	-4.9	0.0	4.9	-7.5	-5.0	-3.0	2.6	3.5	4.4	500	1500	1500	2500	±0.25%
2.5BA	0	2.5	bar	4.1	8	N/A	-6.0	6.0	12.0	17.9	23.8	-3.1	0.0	3.1	-7.5	-5.0	-3.0	2.6	3.5	4.4	500	1500	1500	2500	±0.25%
004BA	0	4	bar	8	17	N/A	-6.0	6.0	10.3	14.7	19.0	-3.6	0.0	3.6	-7.5	-5.0	-3.0	2.6	3.5	4.4	500	1500	1500	2500	±0.25%
006BA	0	6	bar	17	17	N/A	-6.0	6.0	7.9	11.0	14.0	-4.8	0.0	4.8	-7.5	-5.0	-3.0	2.6	3.5	4.4	500	1500	1500	2500	±0.25%
010BA	0	10	bar	17	17	N/A	-6.0	6.0	13.2	18.3	23.4	-2.9	0.0	2.9	-7.5	-5.0	-3.0	2.6	3.5	4.4	500	1500	1500	2500	±0.25%
Differential																									
060MD	-60	60	mbar	340	1380	10000	-8.5	3.5	7.8	11.3	14.8	-1.3	0.6	1.3	-6.3	-5.0	-3.8	4	5	6	1200	2200	2220	3200	±0.35%
100MD	-100	100	mbar	340	1380	10000	-8.5	3.5	13.1	18.9	24.7	-0.8	0.3	0.8	-6.3	-5.0	-3.8	4	5	6	1200	2200	2220	3200	±0.35%
160MD	-160	160	mbar	340	1380	10000	-8.5	3.5	20.9	30.2	39.4	-0.5	0.2	0.5	-6.3	-5.0	-3.8	4	5	6	1200	2200	2220	3200	±0.35%
250MD	-250	250	mbar	1380	2760	10000	-8.5	3.5	14.5	21.8	29.0	-0.7	0.3	0.7	-6.3	-5.0	-3.8	4	5	6	1200	2200	2220	3200	±0.35%
400MD	-400	400	mbar	1380	2760	10000	-7.0	5.3	23.2	34.8	46.4	-0.4	0.2	0.4	-6.3	-5.0	-3.8	2.4	3	5.5	1200	2200	2220	3200	±0.35%
600MD	-600	600	mbar	2060	4100	10000	-7.0	5.3	12.0	18.0	24.0	-0.8	0.5	0.8	-6.0	-5.0	-3.8	2.4	3	5.5	1200	2200	2220	3200	±0.25%
001BD	-1	1	bar	2	4	10	-7.0	5.3	20.0	30.0	40.0	-0.6	0.3	0.5	-6.0	-5.0	-3.8	2.4	3	5.5	1200	2200	2220	3200	±0.25%
1.6BD	-1.6	1.6	bar	4.1	8	10	-7.0	5.3	24.0	32.0	40.0	-0.4	0.3	0.4	-6.0	-5.0	-3.8	2.4	3	5.5	1200	2200	2220	3200	±0.25%
2.5BD	-2.5	2.5	bar	4.1	8	10	-7.0	5.3	37.5	50.0	62.5	-0.3	0.2	0.3	-6.0	-5.0	-3.8	2.4	3	5.5	1200	2200	2220	3200	±0.25%
004BD	-4.0	4.0	bar	8	17	17	-7.0	5.3	33.6	40.0	46.4	-0.3	0.2	0.3	-6.0	-5.0	-3.8	2.4	3	5.5	1200	2200	2220	3200	±0.25%
006BD	-6.0	6.0	bar	17	17	17	-7.0	5.3	25.2	30.0	34.8	-0.4	0.3	0.4	-6.0	-5.0	-3.8	2.4	3	5.5	1200	2200	2220	3200	±0.25%
010BD	-10.0	10	bar	17	17	17	-7.0	5.3	42.0	50.0	58.0	-0.2	0.1	0.2	-6.0	-5.0	-3.8	2.4	3	5.5	1200	2200	2220	3200	±0.25%
Gage																									
060MG	0	60	mbar	340	1380	10000	-8.5	3.5	3.9	5.7	7.4	-2.6	1.1	2.6	-6.3	-5.0	-3.8	4	5	6	1200	2200	2220	3200	±0.35%
100MG	0	100	mbar	340	1380	10000	-8.5	3.5	6.5	9.4	12.3	-1.5	0.7	1.5	-6.3	-5.0	-3.8	4	5	6	1200	2200	2220	3200	±0.35%
160MG	0	160	mbar	340	1380	10000	-8.5	3.5	10.4	15.1	19.7	-1.0	0.4	1.0	-6.3	-5.0	-3.8	4	5	6	1200	2200	2220	3200	±0.35%
250MG	0	250	mbar	1380	2760	10000	-8.5	3.5	7.3	10.9	14.5	-1.4	0.6	1.4	-6.3	-5.0	-3.8	4	5	6	1200	2200	2220	3200	±0.35%
400MG	0	400	mbar	1380	2760	10000	-7.0	5.3	11.6	17.4	23.2	-0.9	0.4	0.9	-6.3	-5.0	-3.8	2.4	3	5.5	1200	2200	2220	3200	±0.35%
600MG	0	600	mbar	2060	4100	10000	-7.0	5.3	6.0	9.0	12.0	-1.7	1.0	1.7	-8.0	-5.0	-3.8	2.4	3	5.5	1200	2200	2220	3200	±0.35%
001BG	0	1	bar	2	4	10	-7.0	5.3	10.0	15.0	20.0	-1.0	0.6	1.0	-8.0	-5.0	-3.8	2.4	3	5.5	1200	2200	2220	3200	±0.25%
1.6BG	0	1.6	bar	4.1	8	10	-7.0	5.3	12.0	16.0	20.0	-0.8	0.5	0.8	-8.0	-5.0	-3.8	2.4	3	5.5	1200	2200	2220	3200	±0.25%
2.5BG	0	2.5	bar	4.1	8	10	-7.0	5.3	18.8	25.0	31.3	-0.6	0.4	0.5	-8.0	-5.0	-3.8	2.4	3	5.5	1200	2200	2220	3200	±0.25%
004BG	0	4	bar	8	17	17	-7.0	5.3	16.8	20.0	23.2	-0.6	0.4	0.6	-8.0	-5.0	-3.8	2.4	3	5.5	1200	2200	2220	3200	±0.25%
006BG	0	6	bar	17	17	17	-7.0	5.3	12.6	15.0	17.4	-0.8	0.6	0.8	-8.0	-5.0	-3.8	2.4	3	5.5	1200	2200	2220	3200	±0.25%
010BG	0	10	bar	17	17	17	-7.0	5.3	21.0	25.0	29.0	-0.5	0.4	0.5	-8.0	-5.0	-3.8	2.4	3	5.5	1200	2200	2220	3200	±0.25%

Notes:

10. Offset: The output signal obtained when the reference pressure is applied to all available pressure ports. Also known as “null” or “zero”.
11. TCO (Thermal Effect on Offset): The deviation in offset due to changes in temperature over the specified temperature range, relative to offset measured at 25 °C.
12. TCS (Thermal Effect on Span): The deviation in full scale span due to changes in temperature over the specified temperature range, relative to full scale span measured at 25 °C.
13. Bridge Resistance: The resistance of the device measured across the power supply leads.
14. TCR (Thermal Coefficient of Resistance): The deviation in bridge resistance due to changes in temperature over the specified temperature range, relative to bridge resistance measured at 25 °C.

Table 8. Pinout for DIP and SMT Packages

Output Type	Pin 1	Pin 2	Pin 3	Pin 4	Pin 5	Pin 6	Pin 7	Pin 8
analog	GND	OUTPUT+	V_{supply}	OUTPUT-	NC	NC	NC	NC

Table 9. Pinout for SIP Packages

Output Type	Pin 1	Pin 2	Pin 3	Pin 4
analog	GND	OUTPUT+	V_{supply}	OUTPUT-

Figure 3. DIP Pressure Port Dimensional Drawings (For reference only: mm [in])

DIP NN: No ports

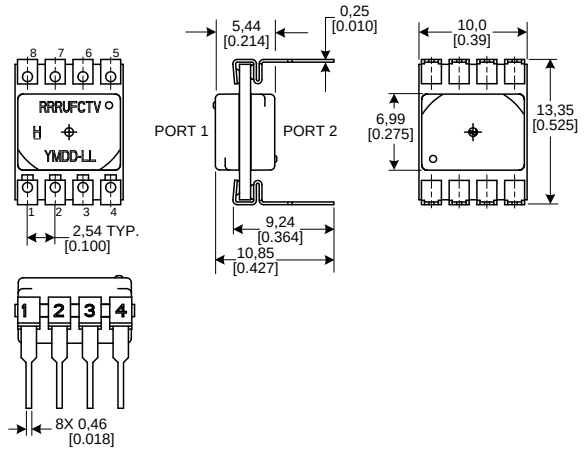

DIP AN: Single axial barbed port

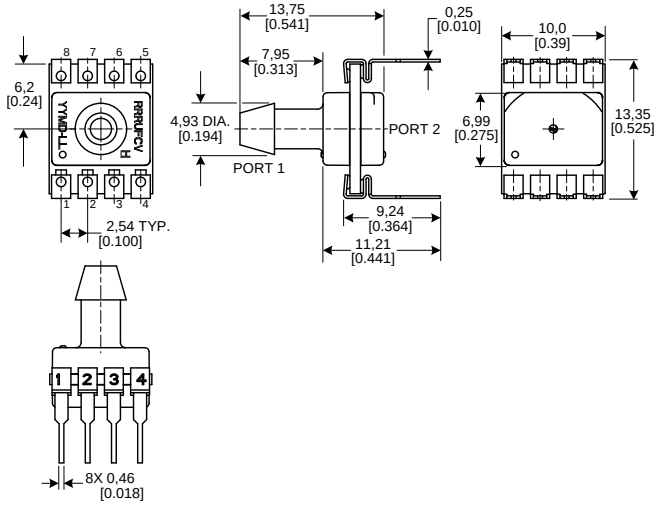

DIP LN: Single axial barbless port

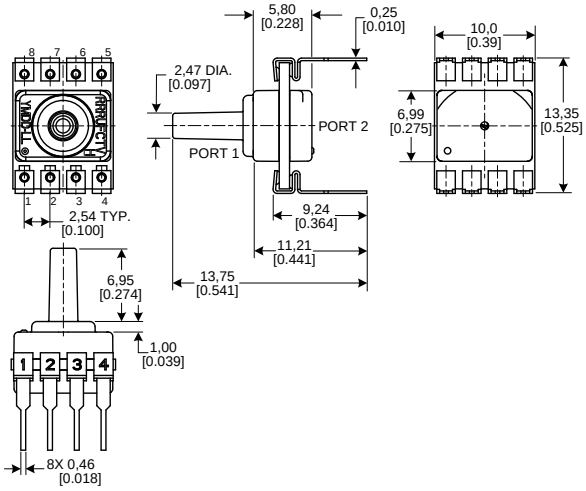

DIP RN: Single radial barbed port

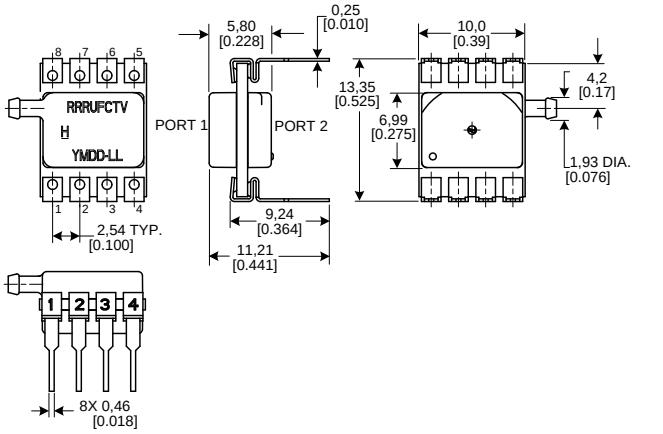

DIP RR: Dual radial barbed ports, same side

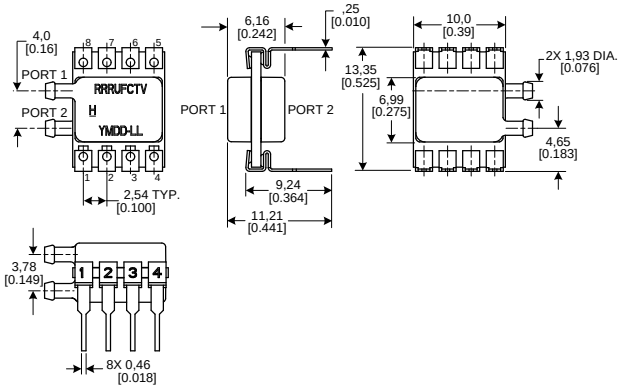

DIP DR: Dual radial barbed ports, opposite sides

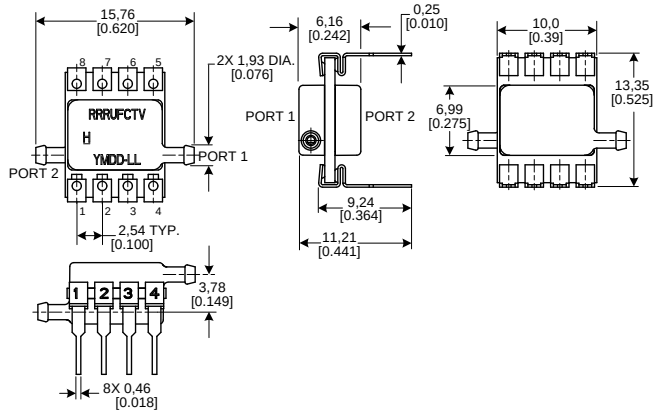

TruStability® Board Mount Pressure Sensors: NSC Series– Uncompensated/Unamplified

Figure 4. SMT Pressure Port Dimensional Drawings (For reference only: mm [in])

SMT NN: No ports

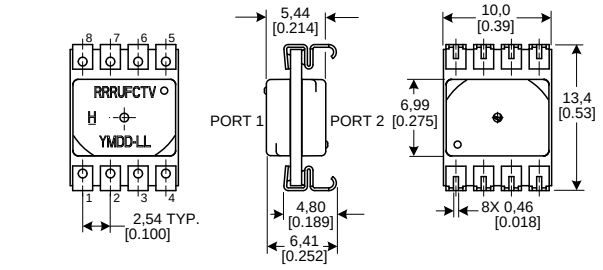

SMT AN: Single axial barbed port

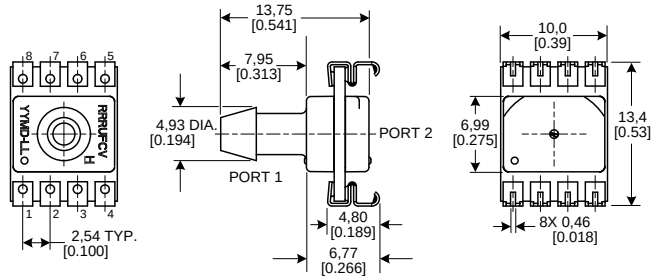

SMT LN: Single axial barbless port

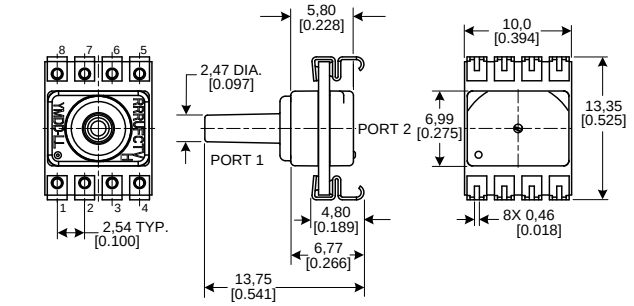

SMT RN: Single radial barbed port

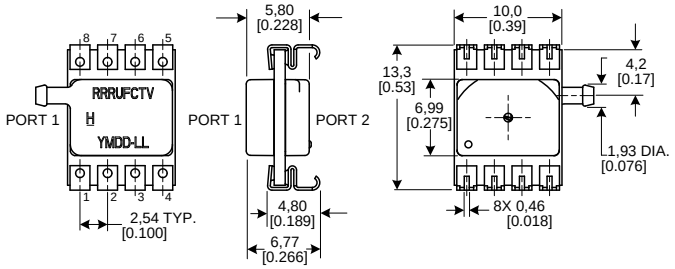

SMT RR: Dual radial barbed ports, same side

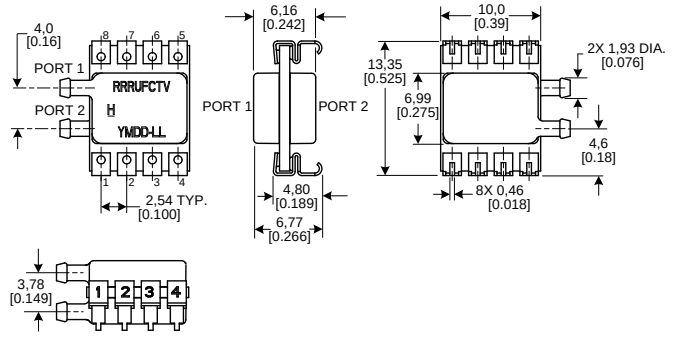

SMT DR: Dual radial barbed ports, opposite sides

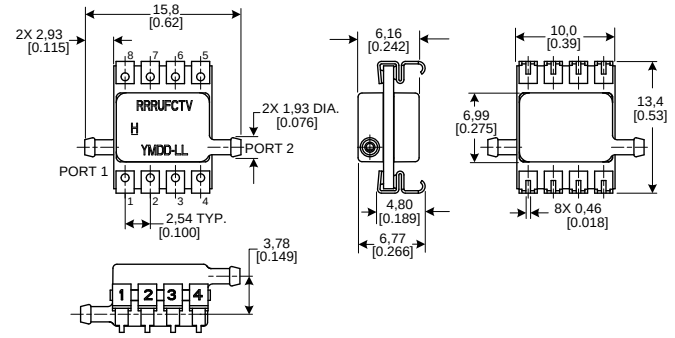

Figure 5. SIP Package Dimensional Drawings (For reference only: mm [in])

SIP NN: No ports

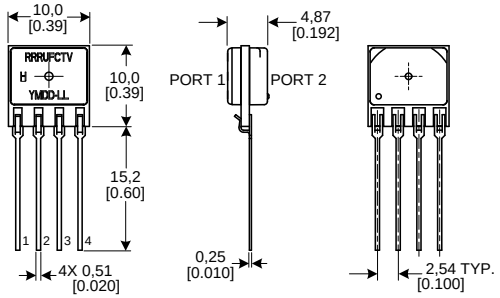

SIP AA: Dual axial barbed ports, opposite sides

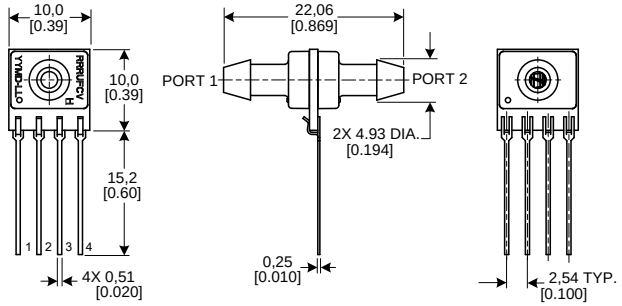

SIP AN: Single axial barbed port

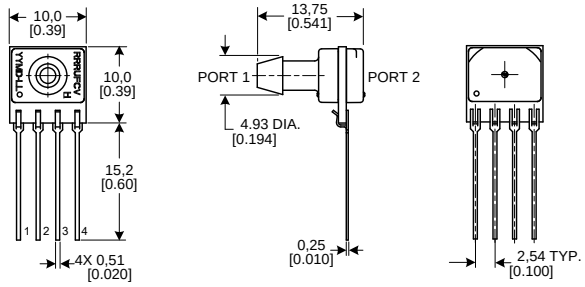

SIP LN: Single barbless port

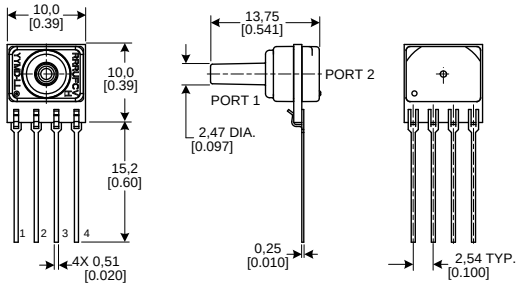

SIP FF: Fastener mount, dual axial barbed ports, opposite sides

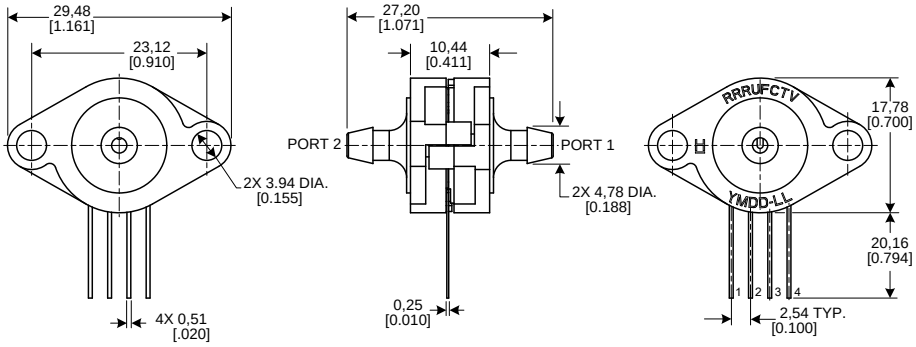

SIP FN: Fastener mount, single axial barbed port

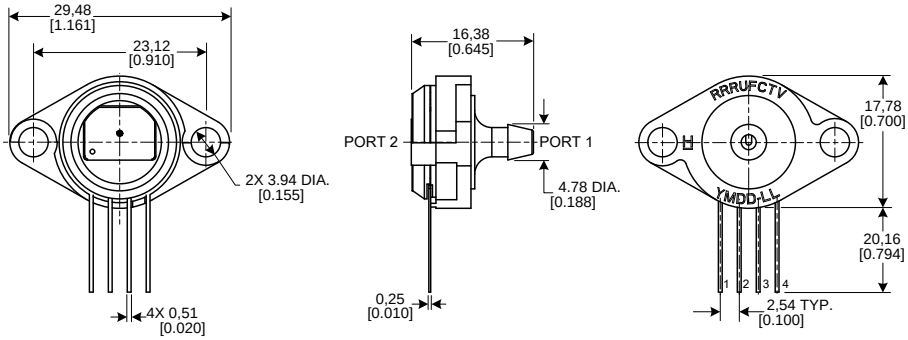

Figure 5. SIP Package Dimensional Drawings (continued)

SIP GN: Ribbed fastener mount, single axial barbed port

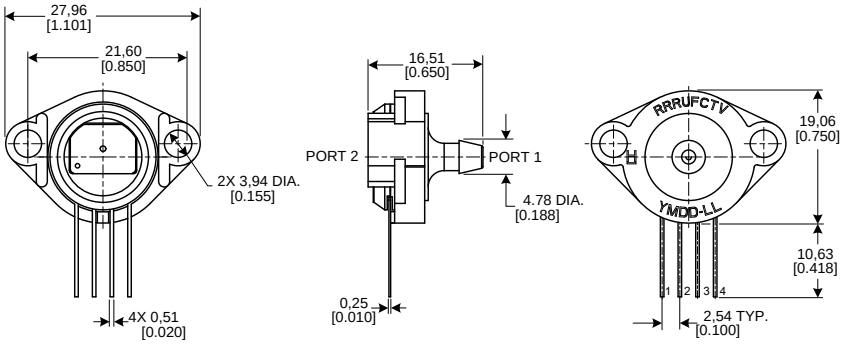

SIP NB: Fastener mount, dual axial ports, same side

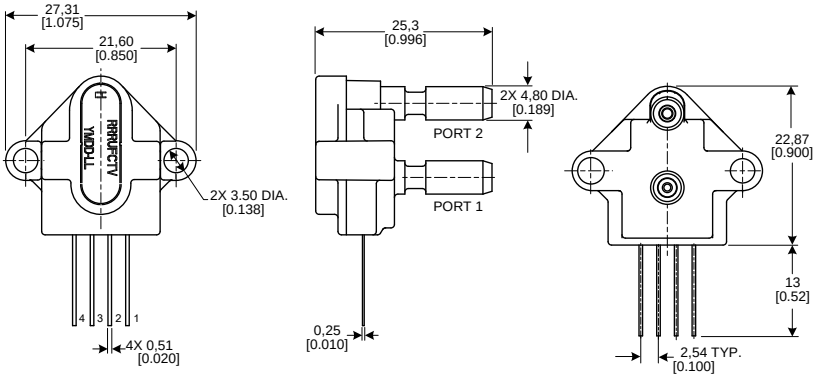

SIP RN: Single radial barbed port

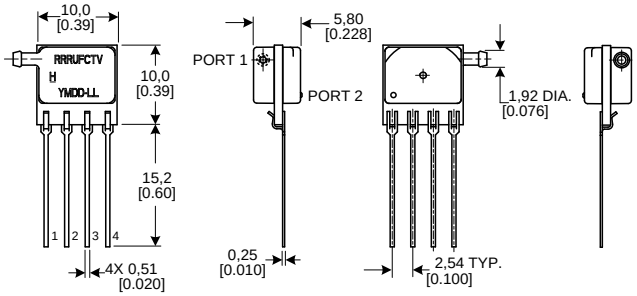

SIP RR: Dual radial barbed ports, same side

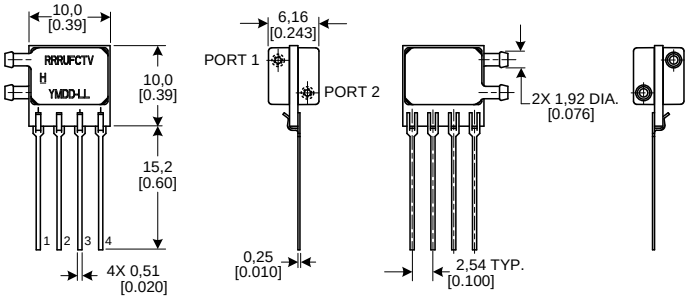

Figure 5. SIP Package Dimensional Drawings (continued)

SIP DR: Dual radial barbed ports, opposite side

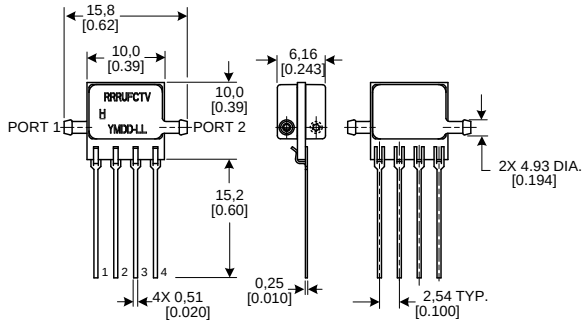

SIP HH: Fastener mount, dual radial barbed ports, same side

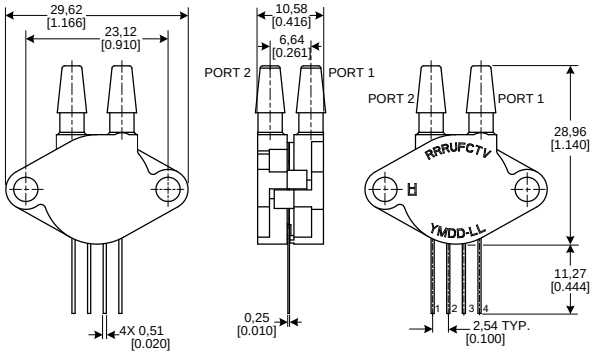

SIP HN: Fastener mount, single radial barbed port

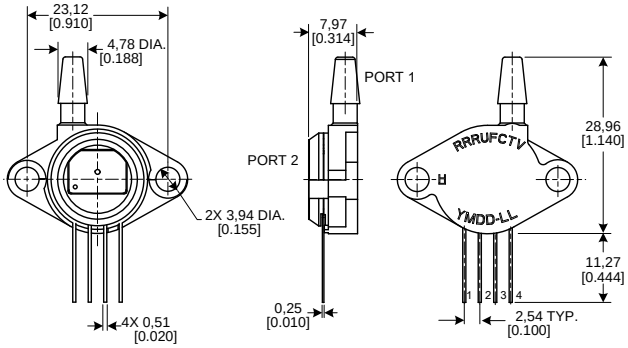

SIP MN: Manifold mount, outer diameter seal

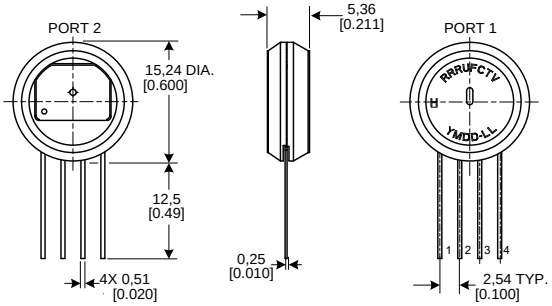

SIP SN: Manifold mount, inner diameter seal

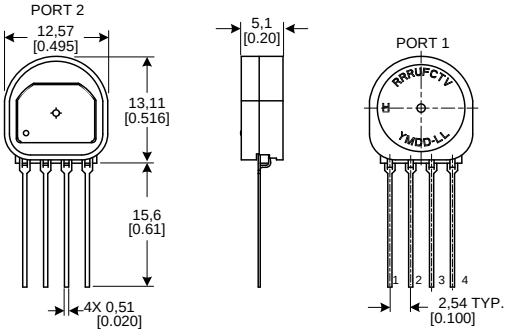

⚠ WARNING

PERSONAL INJURY

DO NOT USE these products as safety or emergency stop devices or in any other application where failure of the product could result in personal injury.

Failure to comply with these instructions could result in death or serious injury.

WARRANTY/REMEDY

Honeywell warrants goods of its manufacture as being free of defective materials and faulty workmanship. Honeywell's standard product warranty applies unless agreed to otherwise by Honeywell in writing; please refer to your order acknowledgement or consult your local sales office for specific warranty details. If warranted goods are returned to Honeywell during the period of coverage, Honeywell will repair or replace, at its option, without charge those items it finds defective. **The foregoing is buyer's sole remedy and is in lieu of all other warranties, expressed or implied, including those of merchantability and fitness for a particular purpose. In no event shall Honeywell be liable for consequential, special, or indirect damages.**

While we provide application assistance personally, through our literature and the Honeywell web site, it is up to the customer to determine the suitability of the product in the application.

Specifications may change without notice. The information we supply is believed to be accurate and reliable as of this printing. However, we assume no responsibility for its use.

⚠ WARNING

MISUSE OF DOCUMENTATION

- The information presented in this product sheet is for reference only. DO NOT USE this document as a product installation guide.
- Complete installation, operation, and maintenance information is provided in the instructions supplied with each product.

Failure to comply with these instructions could result in death or serious injury.

SALES AND SERVICE

Honeywell serves its customers through a worldwide network of sales offices, representatives and distributors. For application assistance, current specifications, pricing or name of the nearest Authorized Distributor, contact your local sales office or:

E-mail: info.sc@honeywell.com

Internet: www.honeywell.com/sensing

Phone and Fax:

Asia Pacific	+65 6355-2828; +65 6445-3033 Fax
Europe	+44 (0) 1698 481481; +44 (0) 1698 481676 Fax
Latin America	+1-305-805-8188; +1-305-883-8257 Fax
USA/Canada	+1-800-537-6945; +1-815-235-6847 +1-815-235-6545 Fax

Sensing and Control
Honeywell
1985 Douglas Drive North
Golden Valley, MN 55422
www.honeywell.com/sensing

Honeywell

008221-1-EN IL50 GLO Printed in USA
July 2011
© 2011 Honeywell International Inc.