Micro Programmable Controller
CPM2C

Omron's powerful CPM2C micro controller redefines the traditional micro PLC. The CPM2C's 33 mm width allows it to fit into small spaces, offers 119 instructions, and has processing speeds rivaling many 'small' PLCs. The 20 I/O units with relay outputs are the smallest in the industry. Multiple communication options along with advanced motion control features enable the CPM2C to provide a powerful solution to virtually any small-scale control application.

- Ultra compact design with 33 mm width
- Built-in combination RS-232C/Peripheral port
- Transistor Output types expand to 192 I/O (CPU + 5 Modules); Relay Output types expand to 180 I/O (CPU + 5 Modules)
- Screw terminal, Fujitsu and MIL (flat ribbon) style connections
- Connect high density MIL and Fujitsu models to Omron relay or terminal blocks for easy wiring and choice of I/O style
- 4K program memory, 2K data memory
- Synchronized pulse control allows synchronization of input devices to control devices
- Temperature sensor modules available
- Optional real-time clock
- Multiple high-speed counter inputs
- 10 kHz pulse outputs
- UL/CSA/CE

Basic Configuration

Up to five Expansion Modules or Expansion I/O Modules can be connected to a CPM2C CPU. The AC Power Supply Unit and the CPM2C-CIF01 or CPM2C-CIF11 Serial Communications Adapters can also be used with the CPU.

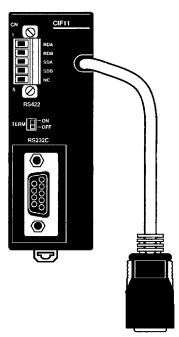

CPM2C-CIF01/CIF11 Serial Communications Adapters for the Mini-peripheral Port (optional)

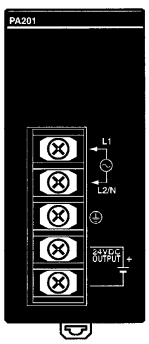

AC Power Supply Unit

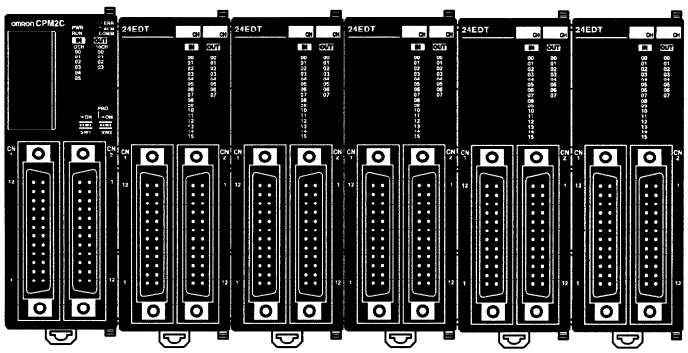

CPU

Up to 5 Expansion Modules or Expansion I/O Modules

sales@prom-elec.com / ООО ПРОМЭЛЕКТРОНИКА

Ordering Information

■ PART NUMBER NOMENCLATURE

CPM2C-□□□□□-□
1 2 3 4 5 6

1. **Number of I/O**
2. **RTC = C1**
   No RTC = C
3. **Input Power**
4. **PNP = T1**
   NPN = T
5. **Relay = R**
   MIL = M
   Connector = C
6. **Power Supply**

■ CPU MODULES WITH 10 I/O POINTS

Stock Note: Shaded models are normally stocked.

Description	CPU module			Inputs	Outputs	Clock	Part number
CPU with Relay Outputs via Terminal Block	10 I/O points (6 inputs, 4 outputs)	I/O terminal block		6 inputs (24 VDC)	4 relay outputs	No	**CPM2C-10CDR-D**
						Yes	**CPM2C-10C1DR-D**
CPU with Transistor Outputs via Fujitsu-compatible Connector		I/O connector	2 Fujitsu connectors	6 inputs (24 VDC)	4 transistor outputs (sinking)	No	**CPM2C-10CDTC-D**
						Yes	**CPM2C-10C1DTC-D**
					4 transistor outputs (sourcing)	No	**CPM2C-10CDT1C-D**
						Yes	**CPM2C-10C1DT1C-D**
CPU with Transistor Outputs via MIL Connector			2 MIL connectors	6 inputs (24 VDC)	4 transistor outputs (sinking)	No	**CPM2C-10CDTM-D**
						Yes	**CPM2C-10C1DTM-D**
					4 transistor outputs (sourcing)	No	**CPM2C-10CDT1M-D**
						Yes	**CPM2C-10C1DT1M-D**

■ CPU MODULES WITH 20 I/O POINTS

Stock Note: Shaded models are normally stocked.

Description	CPU module			Inputs	Outputs	Clock	Part number
CPU with Relay Outputs via Terminal Block	20 I/O points (12 inputs, 8 outputs)	I/O terminal block		12 inputs (24 VDC)	8 relay outputs	No	**CPM2C-20CDR-D**
						Yes	**CPM2C-20C1DR-D**
CPU with Transistor Outputs via Fujitsu-compatible Connector		I/O connector	2 Fujitsu connectors	12 inputs (24 VDC)	8 transistor outputs (sinking)	No	**CPM2C-20CDTC-D**
						Yes	**CPM2C-20C1DTC-D**
					8 transistor outputs (sourcing)	No	**CPM2C-20CDT1C-D**
						Yes	**CPM2C-20C1DT1C-D**
CPU with Transistor Outputs via MIL Connector			2 MIL connectors	12 inputs (24 VDC)	8 transistor outputs (sinking)	No	**CPM2C-20CDTM-D**
						Yes	**CPM2C-20C1DTM-D**
					8 transistor outputs (sourcing)	No	**CPM2C-20CDT1M-D**
						Yes	**CPM2C-20C1DT1M-D**

■ CPU MODULES WITH 32 I/O POINTS

Stock Note: Shaded models are normally stocked.

Description	CPU module			Inputs	Outputs	Clock	Part number
CPU with Transistor Outputs via Fujitsu-compatible Connector	32 I/O points (16 inputs, 16 outputs)	I/O connector	2 Fujitsu connectors	16 inputs (24 VDC)	16 transistor outputs (sinking)	No	**CPM2C-32CDTC-D**
					16 transistor outputs (sourcing)	No	**CPM2C-32CDT1C-D**
CPU with Transistor Outputs via MIL Connector			2 MIL connectors	16 inputs (24 VDC)	16 transistor outputs (sinking)	No	**CPM2C-32CDTM-D**
					16 transistor outputs (sourcing)	No	**CPM2C-32CDT1M-D**

■ POWER SUPPLY MODULES

Stock Note: Shaded models are normally stocked.

Description	Input	Output	Part number
Power Supply	100 to 240 VAC	24 VDC/600 mA	**CPM2C-PA201**

■ EXPANSION I/O MODULES

Stock Note: Shaded models are normally stocked.

Description	I/O capacity	Inputs	Outputs	Part number
Units with terminal blocks	10 I/O points	6 points (24 VDC)	4 relay outputs	**CPM2C-10EDR**
	20 I/O points	12 points (24 VDC)	8 relay outputs	**CPM2C-20EDR**
	8 output points	—	8 relay outputs	**CPM2C-8ER**
Units with Fujitsu-compatible connectors	24 I/O points	16 points (24 VDC)	8 transistor outputs (sinking)	**CPM2C-24EDTC**
			8 transistor outputs (sourcing)	**CPM2C-24EDT1C**
	32 I/O points	16 points (24 VDC)	16 transistor outputs (sinking)	**CPM2C-32EDTC**
			16 transistor outputs (sourcing)	**CPM2C-32EDT1C**
	8 input points	8 points (24 VDC)	—	**CPM2C-8EDC**
	16 input points	16 points (24 VDC)	—	**CPM2C-16EDC**
	8 output points	—	8 transistor outputs (sinking)	**CPM2C-8ETC**
			8 transistor outputs (sourcing)	**CPM2C-8ET1C**
	16 output points	—	16 transistor outputs (sinking)	**CPM2C-16ETC**
			16 transistor outputs (sourcing)	**CPM2C-16ET1C**
Units with MIL connectors	24 I/O points	16 points (24 VDC)	8 transistor outputs (sinking)	**CPM2C-24EDTM**
			8 transistor outputs (sourcing)	**CPM2C-24EDT1M**
	32 I/O points	16 points (24 VDC)	16 transistor outputs (sinking)	**CPM2C-32EDTM**
			16 transistor outputs (sourcing)	**CPM2C-32EDT1M**
	8 input points	8 points (24 VDC)	—	**CPM2C-8EDM**
	16 input points	16 points (24 VDC)	—	**CPM2C-16EDM**
	8 output points	—	8 transistor outputs (sinking)	**CPM2C-8ETM**
			8 transistor outputs (sourcing)	**CPM2C-8ET1M**
	16 output points	—	16 transistor outputs (sinking)	**CPM2C-16ETM**
			16 transistor outputs (sourcing)	**CPM2C-16ET1M**

■ DEDICATED I/O MODULES

Stock Note: Shaded models are normally stocked.

Description	Specifications	Part number
Analog I/O module	2 analog inputs and 1 analog output Voltage I/O: 0 to 5 VDC, 1 to 5 VDC, 0 to 10 VDC, or –10 to +10 VDC Current I/O: 0 to 20 mA or 4 to 20 mA	**CPM2C-MAD11**
Temperature sensor input module	Two thermocouple inputs (Type K or Type J)	**CPM2C-TS001**
	Two platinum resistance thermometer inputs (Pt100 or JPt100)	**CPM2C-TS101**
CompoBus/S I/O Link Module	Operates as a CompoBus/S Slave and provides 8 inputs and 8 outputs to the Master.	**CPM2C-SRT21**
	Flat cable, 4-core , 0.75 mm^2; 100 m length	**SCA1-4F10**
	Twisted pair cable, 2-core x 0.75 mm^2; available commercially	Belden #9409 cable
CompoWay/F Serial Interface Module	Transfer data between the CPU and up to 32 OMRON components equipped with CompoWay/F or SYSWAY communications. This eliminates the need for ladder programming to transfer data between temperature controllers and digital panel meters and the CPU.	**CPM2C-CIF21**

■ FUJITSU-COMPATIBLE CONNECTORS (SEE NOTE)

Note: Fujitsu and MIL connector(s) not included with any of the units.

Stock Note: Shaded models are normally stocked.

Description		Part number
	24-pin soldered connector with cover	**C500-CE241**
	24-crimp connector with cover	**C500-CE242**
	24-pin pressure connector	**C500-CE243**

■ MIL FLAT CABLE CONNECTORS (SEE NOTE)

Note: Fujitsu and MIL connector(s) not included with any of the units.

Stock Note: Shaded models are normally stocked.

Description		Part number
Strain Relief Socket Set	Socket	**XG4M-2030**
	Strain relief	**XG4T-2004**

■ CRIMP TOOLS (FOR MIL FLAT CABLE CONNECTORS)

Stock Note: Shaded models are normally stocked.

Description	Part number
Crimp tool	**XY2B-0002**
Attachment	**XY2B-1007**

■ MIL LOOSE-WIRE, PRESSURE-FITTED CONNECTORS (SEE NOTE)

Note: Fujitsu and MIL connector(s) not included with any of the units.

Stock Note: Shaded models are normally stocked.

Description			Part number
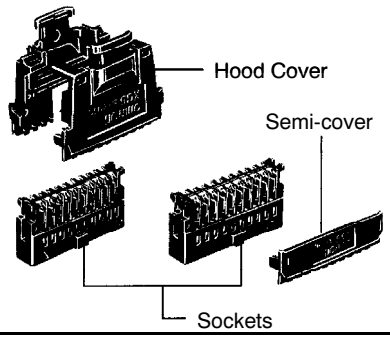	Socket	AWG24	**XG5M-2032-N**
		AWG26 to AWG28	**XG5M-2035-N**
	Hood cover		**XG5S-2012**
	Semi-cover (Two required for each socket)		**XG5S-1001**

■ PRESSURE FITTING TOOL (FOR MIL LOOSE-WIRE, PRESSURE-FITTED CONNECTORS)

Stock Note: Shaded models are normally stocked.

Description	Part number
Simple pressure fitting tool	**XY2B-7006**

■ COMMUNICATIONS PORT CONNECTING CABLES

Stock Note: Shaded models are normally stocked.

Connector	Description	Cable length	Part number
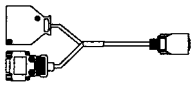	Converts the CPM2C CPU's mini-peripheral port to a peripheral port and RS-232C port.	0.15 m (about 4 in)	**CPM2C-CN111**
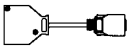	Converts the CPM2C CPU's mini-peripheral port to a peripheral port.	0.05 m (about 2 in)	**CS1W-CN114**
	Converts the CPM2C CPU's mini-peripheral port to an RS-232C port.	0.1 m (about 2 in)	**CS1W-CN118**

■ COMMUNICATION ADAPTERS AND CONNECTING CABLES

Stock Note: Shaded models are normally stocked.

Using this port	Name	Description	Part number
Communications	RS-232C Adapter Unit	RS-232C port (DIN mount) CPU's mini-peripheral port → Mini-peripheral port + RS-232C port	**CPM2C-CIF01-V1**
	RS-422/RS-232C Adapter Unit	RS-422/RS-232C adapter (DIN mount) CPU's mini-peripheral port → RS422 port + RS-232C port	**CPM2C-CIF11**
	Direct CPM2C CPU to NT cable	NT21/31/631/20/600/11 and NS series to CS1/CJ1/CQM1H/CPM2C mini-peripheral port (2 m)	**XW2Z-200T-2**
	Direct CPM2C CPU to NT cable	NT21/31/631/20/600/11 and NS series to CS1/CJ1/CQM1H/CPM2C mini-peripheral port (5 m)	**XW2Z-500T-2**
	Direct CPM2C CPU to NT2S cable	NT2S-SF121- to CS1/CJ1/CQM1H/CPM2C mini-peripheral port (2 m)	**NT2S-CN223**
	Direct CPM2C CPU to NT2S cable	NT2S-SF122- and SF123- to CS1/CJ1/CQM1H/CPM2C mini-peripheral port (2 m)	**NT2S-CN224**
RS-232C	RS-232C cable	For 25-pin computer serial port (2 m)	**XW2Z-200S**
		For 25-pin computer serial port (5 m)	**XW2Z-500S**
		For a 9-pin computer serial port (2 m)	**XW2Z-200S-V**
		For a 9-pin computer serial port (5 m)	**XW2Z-500S-V**

■ PROGRAMMING CONSOLES AND CABLES

Stock Note: Shaded models are normally stocked.

Product		Part number
Programming Console with 2 m cable attached; connects directly to the peripheral port		**CQM1-PRO01-E**
Programming Console (Requires separate cable)		**C200H-PRO27-E**
Connecting Cable for C200H-PRO27-E; connects directly to a Peripheral port	2 m length	**C200H-CN222**
	4 m length	**C200H-CN422**
Connecting Cable for C200H-PRO27-E allows direct connection to the CPM2C CPU Communications port	2 m length	**CS1W-CN224**
	4 m length	**CS1W-CN624**
Connecting Cable used only from CPU's peripheral port to computer (D-sub 9-pin)	2 m length	**CS1W-CN226**
	6 m length	**CS1W-CN626**

■ SUPPORT SOFTWARE

Stock Note: Shaded models are normally stocked.

Item	Description	Part number
CX-Programmer Jr.	Windows based programming software for micro controllers	**WS02-CXPC1-EJ-V□.□**
CX-Programmer	Full programming software package for all controllers	**WS02-CXPC1-E-V□.□**

■ PROGRAM TRANSFER EQUIPMENT

Stock Note: Shaded models are normally stocked.

Product	Description	Part number
Expansion Memory Unit	Uploads and downloads program and setup memory areas to and from the controller.	**CPM1-EMU01-V1**
EEPROM (256 kbits)	Used with the Expansion Memory Unit	**EEPROM-CPM1-EMU01**

■ MAINTENANCE ACCESSORIES

Stock Note: Shaded models are normally stocked.

Product	Description	Part number
Battery	Backs up memory in the CPM2C CPU. (One battery is already installed in CPUs containing a clock.)	**CPM2C-BAT01**

■ MANUALS

Product	Description	Part number
Operation manual	CPM2C programmable controller operation manual	**W356**
Programming manual	CPM1/CPM1A/CPM2A/CPM2C programming manual	**W353**

Specifications

■ GENERAL SPECIFICATIONS FOR CPU AND EXPANSION UNITS

Item	CPUs with 10/20 I/O points		CPUs with 32 I/O points transistor outputs	Expansion I/O Units and Expansion Units
	Relay outputs	Transistor outputs		
Supply voltage	24 VDC			
Operating voltage range	20.4 to 26.4 VDC			
Power consumption (See Note)	CPM2C-10C□DR-□: 4 W CPM2C-10C□DT□C-D: 3 W CPM2C-10C□DT□M-D: 3 W CPM2C-20C□DR-□: 4 W CPM2C-20C□DT□C-D: 3 W CPM2C-20C□DT□M-D: 3 W CPM2C-32CDT□C-D: 3 W CPM2C-32CDT□M-D: 3 W Note: The above values for CPU power consumption include the power consumption for Programming Consoles and Communications Adapter Units (CIF□□).			CPM2C-10EDR: 1 W CPM2C-20EDR: 2 W CPM2C-8ER: 2 W CPM2C-24EDTC: 1 W CPM2C-24EDT1C 1 W CPM2C-32EDTC: 1 W CPM2C-32EDT1C 1 W CPM2C-8EDC: 1 W CPM2C-16EDC: 1 W CPM2C-8ETC: 1 W CPM2C-8ET1C: 1 W CPM2C-16ETC: 1 W CPM2C-16ET1C: 1 W CPM2C-24EDTM: 1 W CPM2C-24EDT1M: 1 W CPM2C-32EDTM: 1 W CPM2C-32EDT1M: 1 W CPM2C-8EDM: 1 W CPM2C-16EDM: 1 W CPM2C-8ETM: 1 W CPM2C-8ET1M: 1 W CPM2C-16ETM: 1 W CPM2C-16ET1M: 1 W CPM2C-MAD11: 3.5 W CPM2C-TS001: 1.5 W CPM2C-TS101: 1.5 W CPM2C-SRT21: 1 W CPM2C-CIF21: 1 W
Inrush current	25 A max.			
Insulation resistance	20 MΩ min. (at 500 VDC) between insulated circuits			
Dielectric strength	2,300 VAC for 1 min (between insulated circuits)			
Noise immunity	Conforms to IEC61000-4-4; 2 kV (power lines)			
Vibration resistance	10 to 57 Hz, 0.075-mm double amplitude, 57 to 150 Hz, acceleration: 9.8 m/s^2 in X, Y, and Z directions for 80 minutes each (Time coefficient; 8 minutes × coefficient factor 10 = total time 80 minutes)			
Shock resistance	147 m/s^2 three times each in X, Y, and Z directions			
Ambient temperature	Operating: 0° to 55°C (32° to 131°F) Storage: −20° to 75°C (−4° to 167°F) except for the battery			
Humidity	10% to 90% (with no condensation)			
Atmosphere	Must be free from corrosive gas			
Power interrupt time	2 ms min.			
Weight	10 I/O: 200 g max. 20 I/O: 250 g max.	200 g max.	200 g max.	8 and 16 inputs: 150 g 8 and 16 transistor outputs 150 g 8 relay outputs 200 g 10 I/O (relay outputs) 200 g 24 I/O (transistor outputs) 200 g 32 I/O (transistor outputs) 200 g Peripheral/RS-232C Adapter 150 g RS-422/RS-232C Adapter 150 g AC power supply unit 250 g Analog I/O, Temperature units 200 g CompoBus/S unit 150 g

Note: When calculating the total power consumption, it is necessary to include the power consumption of Programming Consoles, RS-232C Adapters and other devices.

■ CPU CHARACTERISTICS

Item		10 I/O points (relay/transistor outputs)	20 I/O points (relay/transistor outputs)	32 I/O points (transistor outputs)
Control method		Stored program method		
I/O control method		Cyclic scan with direct output (Immediate refreshing can be performed with IORF(97).)		
Programming language		Ladder diagram		
Instruction length		1 step per instruction, 1 to 5 words per instruction		
Instructions		Basic instructions: 14 Special instructions: 105 instructions, 185 variations		
Execution time		Basic instructions: 0.64 μs (LD instruction) Special instructions: 7.8 μs (MOV instruction)		
Program capacity		4,096 words		
User data memory capacity		2,048 words		
I/O capacity	CPU only	10 points	20 points	32 points
	With Expansion I/O Modules	170 points max.	180 points max.	192 points max.
Clock function		Shows the year, month, day of the week, day, hour, minute, and second. (Battery backup) CPUs with “C1” in the model number have a built-in clock.		Not provided on CPUs with 32 I/O points.
Communications functions		A CPM2C-CN111, CS1W-CN114 or CS1W-CN118 connecting cable is required to connect to the CPM2C’s communications port. The communications port can be used as both a peripheral and RS-232C port. Peripheral port: Supports Host Link, peripheral bus, no-protocol, or Programming Console connections. RS-232C port: Supports Host Link, no-protocol, 1:1 Slave Unit Link, 1:1 Master Unit Link, or 1:1 NT Link connections.		
Memory protection (see notes 1 and 2)		HR area, AR area, program contents, read/write DM area contents, and counter values are maintained during power interruptions.		
Memory backup (see notes 1 and 2)		Flash memory: Program, read-only DM area, and PC Setup Memory backup: The read/write DM area, HR area, AR area, and counter values are backed up CPU with clock (battery): 2-year lifetime at 25°C CPU without clock (capacitor): 10-day backup at 25°C CPU without clock (lithium battery): 5-year lifetime at 25°C		
Self-diagnostic functions		CPU failure (watchdog timer), I/O bus error, battery error, and memory failure		
Program checks		No END instruction, programming errors (checked when operation is started)		
Basic interrupts	Interrupt processing	2 interrupts	4 interrupts	4 interrupts
		Shared by the external interrupt inputs (counter mode) and the quick-response inputs.		
	Interval timer interrupts	1 (Scheduled Interrupt Mode or Single Interrupt Mode)		
High-speed counter	High-speed counter	One high-speed counter: 20 kHz single-phase or 5 kHz two-phase (linear count method) Counter interrupt: 1 (set value comparison or set-value range comparison)		
	Interrupt Inputs (Counter mode)	2 inputs	4 inputs	4 inputs
		Shared by the external interrupt inputs and the quick-response inputs.		
Pulse output		Two points with no acceleration/deceleration, 10 Hz to 10 kHz each, and no direction control. One point with trapezoid acceleration/deceleration, 10 Hz to 10 kHz, and direction control. Two points with variable duty-ratio outputs. (Pulse outputs can be used with transistor outputs only, they cannot be used with relay outputs.)		
Synchronized pulse control		One point: A pulse output can be created by combining the high-speed counter with pulse outputs and multiplying the frequency of the input pulses from the high-speed counter by a fixed factor. (This output is possible with transistor outputs only, it cannot be used with relay outputs.)		
Quick-response inputs		2 inputs	4 inputs	4 inputs
		Shared by the external interrupt inputs and the interrupt inputs (counter mode). Min. input pulse width: 50 μs max.		
Input time constant (ON response time = OFF response time)		Can be set for all input points. (1 ms, 2 ms, 3 ms, 5 ms, 10 ms, 20 ms, 40 ms, or 80 ms)		

Notes are on the next page.

CPU Characteristics table notes:

Note: 1. The DM area, HR area, AR area, and counter values are backed up. If the backup battery or capacitor is discharged, the contents of these ares will be lost and the data values will revert to the defaults.

2. The contents of the program area, read-only DM area (DM 6144 to DM 6599), and PC setup (DM 6600 to DM 6655) are stored in flash memory. The contents of these areas will be read from flash memory the next time the power is turned ON, even if the backup battery or capacitor is discharged.
When data has been changed in any of these areas, write the new values to flash memory by switching the CMP2C to MONITOR or RUN mode, or by turning the power OFF and then ON again.

■ I/O ALLOCATION

Input bits	IR 00000 to IR 00915 (Words not used for input bits can be used for work bits.)
Output bits	IR 01000 to IR 01915 (Words not used for output bits can be used for work bits.)
Work bits	928 bits: IR 02000 to IR 04915 (Words IR 020 to IR 049) and IR 20000 to IR 22715 (Words IR 200 to IR 227)
Special bits (SR area)	448 bits: SR 22800 to SR 25515
Temporary bits (TR area)	8 bits (TR0 to TR7)
Holding bits (HR area)	320 bits: HR 0000 to HR 1915 (Words HR 00 to HR 19)
Auxiliary bits (AR area)	384 bits: AR 0000 to AR 2315 (Words AR 00 to AR 23)
Link bits (LR area)	256 bits: LR 0000 to LR 1515 (Words LR 00 to LR 15)
Timers/Counters	256 timers/counters (TIM/CNT 000 to TIM/CNT 255) 1-ms timers: TMHH(—) 10-ms timers: TIMH(15) 100-ms timers: TIM 1-s/10-s timers: TIML(—) Decrementing counters: CNT Reversible counters: CNTR(12)
Data memory	Read/Write: 2,048 words (DM 0000 to DM 2047)* Read-only: 456 words (DM 6144 to DM 6599) PC Setup: 56 words (DM 6600 to DM 6655) *The Error Log is contained in DM 2000 to DM 2021.

■ I/O SPECIFICATIONS

CPU Input Specifications

Item	Inputs	Specification		
		10 I/O CPU	20 I/O CPU	32 I/O CPU
Input voltage	All	24 VDC $^{+10\%}/_{-15\%}$		
Input impedance	IN00000 to IN00001	2.7 kΩ		
	IN00002 to IN00004	3.9 kΩ	—	—
	IN00002 to IN00006	—	3.9 kΩ	3.9 kΩ
	IN00005	4.7 kΩ	—	—
	IN00007 and up	—	4.7 kΩ	4.7 kΩ
Input current	IN00000 to IN00001	8 mA typical		
	IN00002 to IN00004	6 mA typical	—	—
	IN00002 to IN00006	—	6 mA typical	6 mA typical
	IN00005 and up	5 mA typical	—	—
	IN00007 and up	—	5 mA typical	—
	IN00007	—	—	5 mA typical
	IN00100 to IN00107	—	—	5 mA typical
ON voltage/current	IN00000 to IN00001	17 VDC min., 5.0 mA		
	IN00002 and up	14.4 VDC min., 3.5 mA		
OFF voltage/current	All	5.0 VDC max., 1.1 mA		
ON delay	All	1 to 80 ms max. Default: 10 ms (See Note)		
OFF delay	All	1 to 80 ms max. Default: 10 ms (See Note)		
Circuit configuration	IN00000 to IN00001	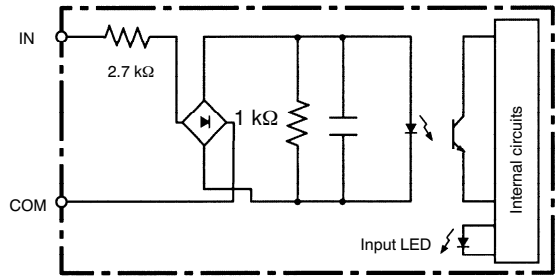		
	CPUs with 10 I/O points: IN00002 to IN00004 CPUs with 20 or 32 I/O points: IN00002 to IN00006	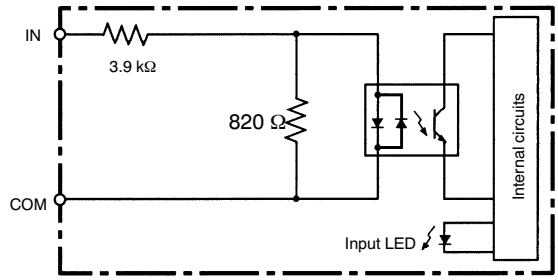		
	CPUs with 10 I/O points: IN00005 CPUs with 20 I/O points: IN00007 to IN00011 CPUs with 32 I/O points: IN00007 and IN00100 to IN00107	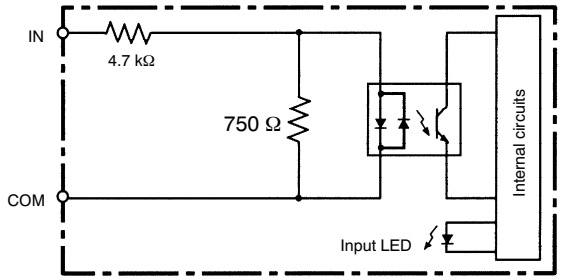		

Note: The input time constant can be set to 1, 2, 3, 5, 10, 20, 40, or 80 ms in the PLC Setup.

High-speed Counter Inputs

The following CPU input bits can be used as high-speed counter inputs. The maximum count frequency is 5 kHz in differential phase mode and 20 kHz in the other modes.

Input	Function			
	Differential phase mode	Pulse plus direction input mode	Up/down input mode	Increment mode
IN00000	A-phase pulse input	Pulse input	Increment pulse input	Increment pulse input
IN00001	B-phase pulse input	Direction input	Decrement pulse input	Normal input
IN00002	Z-phase pulse input or hardware reset input (IN00002 can be used as a normal input when it is not used as a high-speed counter input.)			

Note: The minimum pulse widths for inputs IN00000 (A-phase input) and IN00001 (B-phase input) are as follows:

Pulse plus direction input mode, Up/down input mode, Increment mode

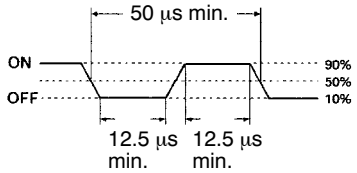

Differential phase mode

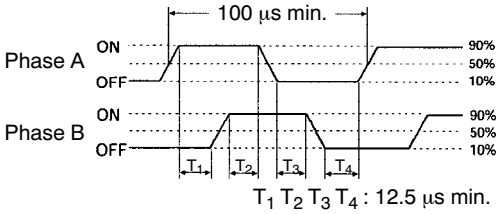

The minimum pulse width for input IN00002 (Z-phase input) is as follows:

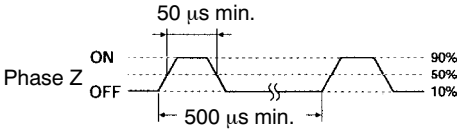

Interrupt Inputs

CPM2C PLCs have inputs that can be used as interrupt inputs (interrupt input mode or counter mode) and quick-response inputs. The minimum pulse width for these inputs is 50 μs.
In CPUs with 10 I/O points, inputs IN00003 and IN00004 can be used as interrupt inputs. In CPUs with 20 I/O points, inputs IN00003 through IN00006 can be used as interrupt inputs.

■ EXPANSION I/O MODULE INPUT SPECIFICATIONS

Item	Specification
Input voltage	24 VDC $^{+10\%}/_{-15\%}$
Input impedance	4.7 kΩ
Input current	5 mA typical
ON voltage	14.4 VDC min., 3.5 mA
OFF voltage	5.0 VDC max., 1.1 mA
ON delay	1 to 80 ms max. Default: 10 ms (See note.)
OFF delay	1 to 80 ms max. Default: 10 ms (See note.)
Circuit configuration	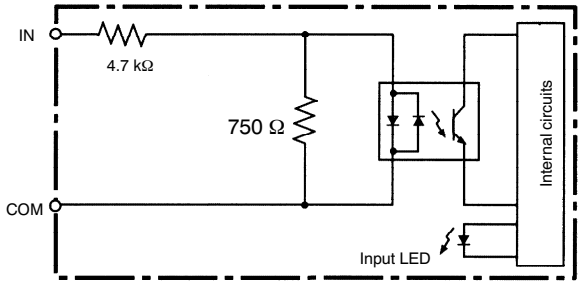

Note: The input time constant can be set to 1, 2, 3, 5, 10, 20, 40, or 80 ms in the PLC Setup.

■ CPM2C OUTPUT SPECIFICATIONS (CPUs AND EXPANSION I/O MODULES)

Relay Output

Item	Specification
Max. switching capacity	2 A, 250 VAC (cosϕ = 1) 2 A, 24 VDC (4 A/common)
Min. switching capacity	10 mA, 5 VDC
Service life of relay	Electrical: 150,000 operations (30-VDC resistive load) 100,000 operations (240-VAC inductive load, cosϕ = 0.4) Mechanical: 20,000,000 operations
ON delay	15 ms max.
OFF delay	15 ms max.
Circuit configuration	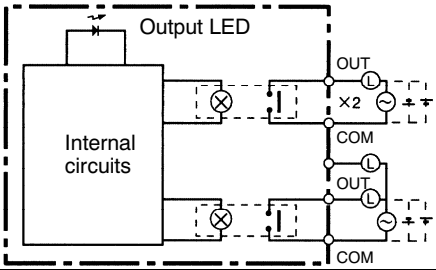

■ TRANSISTOR OUTPUTS (NPN OR PNP)

For CPUs and Expansion I/O Modules

Item	Specification
Max. switching capacity	CPUs with 10 or 20 I/O points: OUT01000 to OUT01007: 40 mA/4.5 VDC to 300 mA/20.4 VDC, 300 mA (20.4 VDC to 26.4 VDC) CPUs with 32 I/O points: OUT01000 to OUT01007: 40 mA/4.5 VDC to 300 mA/20.4 VDC, 300 mA (20.4 VDC to 26.4 VDC) OUT01100 to OUT01107: 40 mA/4.5 VDC to 100 mA/20.4 VDC, 100 mA (20.4 VDC to 26.4 VDC) Expansion I/O Modules: OUT01□00 to OUT01□07: 40 mA/4.5 VDC to 300 mA/20.4 VDC, 300 mA (20.4 VDC to 26.4 VDC) OUT01□08 to OUT01□15: 40 mA/4.5 VDC to 100 mA/20.4 VDC, 100 mA (20.4 VDC to 26.4 VDC) Note: When using OUT01000 or OUT01001 as a pulse output, connect a dummy resistor as required to bring the load current between 10 and 150 mA. If the load current is below 10 mA, the ON/OFF response time will be longer and high-speed pulses will not be output. The transistor will heat if used at 150 mA or higher, possibly damaging elements.
Min. switching capacity	0.5 mA
Max. inrush current	0.9 A for 10 ms (charging and discharging waveform)
Leakage current	0.1 mA max.
Residual voltage	0.8 V max.
ON delay	OUT01000 and OUT01001: 20 μs max. OUT01002 and up: 0.1 ms max.
OFF delay	OUT01000 and OUT01001: 40 μs max. for 10 to 300 mA 0.1 ms max. for 0.5 to 10 mA OUT01002 and up: 1 ms max.
Fuse	1 fuse for each 2 outputs (The fuse cannot be replaced by the user.)
Circuit configuration	**NPN Outputs** **PNP Outputs**

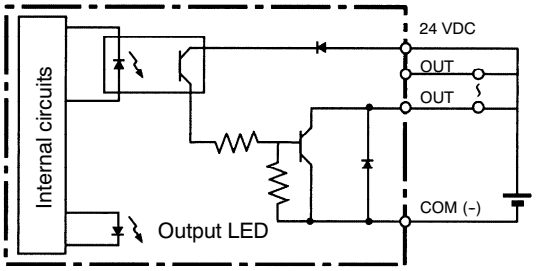

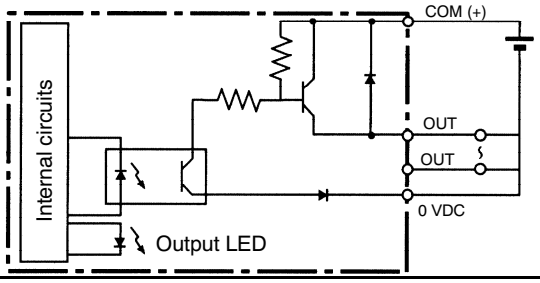

■ AC POWER SUPPLY UNIT

The slim, compact CPM2C-PA201 AC Power Supply Unit is the same shape as the CPM2C's CPU. It connects with a connecting cable (23 cm) provided. It can also be used for CPM1A and CPM2A CPUs and as display power supply (wired by the user).

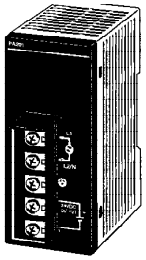

Service power supply for external devices such as sensors (24 V).

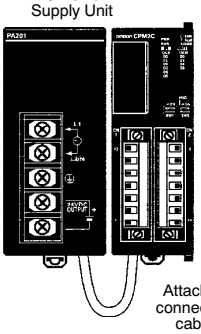

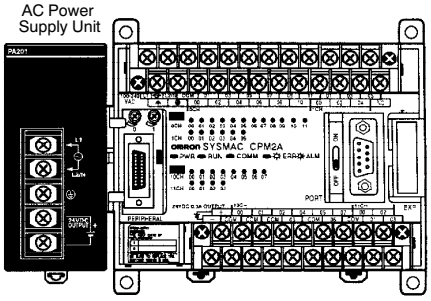

CPM2C-PA201 AC Power Supply Unit Specifications

Item			Specification
Rated output			15 W
Output voltage			24 V
Output current			600 mA
Efficiency			75% min. (at rated output)
Input conditions	Rated voltage		100 to 240 VAC (85 to 264 VAC allowable voltage range)
	Frequency		47 to 63 Hz
	Current	100 V	0.4 A
		200 V	0.2 A
	Leakage current	100 V	0.5 mA max. (at rated output)
		200 V	1 mA max. (at rated output)
	Inrush current	100 V	15 A max. (at 25°C cold start)
		200 V	30 A max. (at 25°C cold start)
Output characteristics	Output voltage accuracy		5%/–10%, 10%/–15% (including input, load, and temperature fluctuations)
	Minimum output current		30 mA
	Ripple noise voltage		2% (p-p) max.
	Input fluctuation		0.75% max.
	Load fluctuation		4% max.
	Temperature fluctuation		0.05%/°C max.
	Startup time		300 ms max. (at input voltage of 100 VAC or 200 VAC and the rated output)
	Output hold time		10 ms (at input voltage of 100 VAC or 200 VAC and the rated output)
Overcurrent protection			Self-resetting, operates at 105% to 335% of the rated current, suspended and independent operation
Overvoltage protection			None
Ambient operating temperature			0° to 55°C (32° to 131°F)
Ambient storage temperature			–20° to 70°C (–4° to 158°F)
Ambient operating humidity			10% to 90% (no condensation)
Dielectric strength			2,000 V for 1 min between all inputs and GR Leakage current: 10 mA 3,000 V for 1 min between all inputs and all outputs Leakage current: 10 mA 1,000 V for 1 min between all outputs and GR Leakage current: 10 mA
Insulation resistance			100 MΩ min. at 500 VDC between all outputs and any input, and between all outputs and GR
Vibration resistance			10 to 57 Hz, amplitude, 57 to 150 Hz, acceleration: 9.8 m/s^2 in X, Y, and Z directions for 80 minutes according (Time coefficient: 8 minutes × coefficient factor 10 = total time 80 min.)
Shock resistance			147 m/s^2 3 times each in X, Y, and Z directions
Noise terminal voltage			FCC class A
Weight			250 g max.

■ DEDICATED I/O MODULES SPECIFICATIONS

Mixed Analog I/O Module CPM2C-MAD11 (2 input and 1 output channels)

For process input variables such as pressure, flow, and humidity, use a Mixed Analog I/O Module. The single analog output can provide a signal for recording devices, valve controllers or a transfer output of the analog signal. Up to 4 Mixed Analog I/O Modules can be used in a CPM2C system with other Expansion I/O Modules. A maximum of 5 Expansion I/O Modules, including Dedicated I/O Modules, can be used in a CPM2C system.

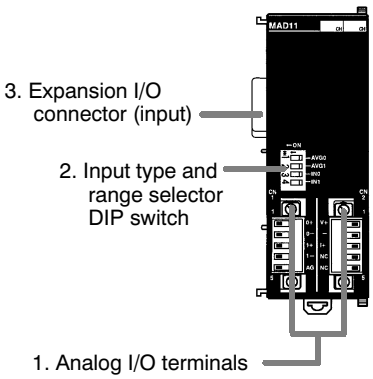

Item			Voltage I/O	Current I/O
Analog input section	Number of inputs		2 inputs (2 words allocated)	
	Input signal range		0 to 5 VDC, 1 to 5 VDC, 0 to 10 VDC, or −10 to +10 VDC	0 to 20 mA or 4 to 20 mA
	Max. rated input		±15 V	±30 mA
	External input impedance		1 MΩ min.	250 Ω
	Resolution		1/6000 (full scale)	
	Overall accuracy	25°C	0.3% full scale	0.4% full scale
		0 to 55°C	0.6% full scale	0.8% full scale
	A/D conversion data		16-bit binary (4-digit hexadecimal) Full scale for −10 to +10 V: F448 to 0BB8 Hex Full scale for other ranges: 0000 to 1770 Hex	
	Averaging function		Supported (Settable for individual inputs via DIP switch)	
	Open-circuit detection function		Supported	
Analog output section	Number of outputs		1 output (1 word allocated)	
	Output signal range		1 to 5 VDC, 0 to 10 VDC, or −10 to +10 VDC	0 to 20 mA or 4 to 20 mA
	Allowable external output load resistance		1 kΩ min.	600 Ω max.
	External output impedance		0.5 Ω max.	—
	Resolution		1/6000 (full scale)	
	Overall accuracy	25°C	0.4% full scale	
		0 to 55°C	0.8% full scale	
	Set data (D/A conversion)		16-bit binary (4-digit hexadecimal) Full scale for −10 to +10 V: F448 to 0BB8 Hex Full scale for other ranges: 0000 to 1770 Hex	
Conversion time			2 ms/point (6 ms/all points)	
Isolation method			Photocoupler isolation between analog I/O terminals and internal circuits. No isolation between analog I/O signals.	

Temperature Sensor Input Modules CPM2C-TS001 and CPM2C-TS101 (2 input channels)

By connecting a Temperature Sensor Module to the CPM2C, inputs can be received from thermocouples or platinum resistance thermometers. Inputs are converted to binary data (4-digit hexadecimal) and stored in the IR area. A maximum of four Temperature Sensor Input Modules can be used in a CPM2C system.

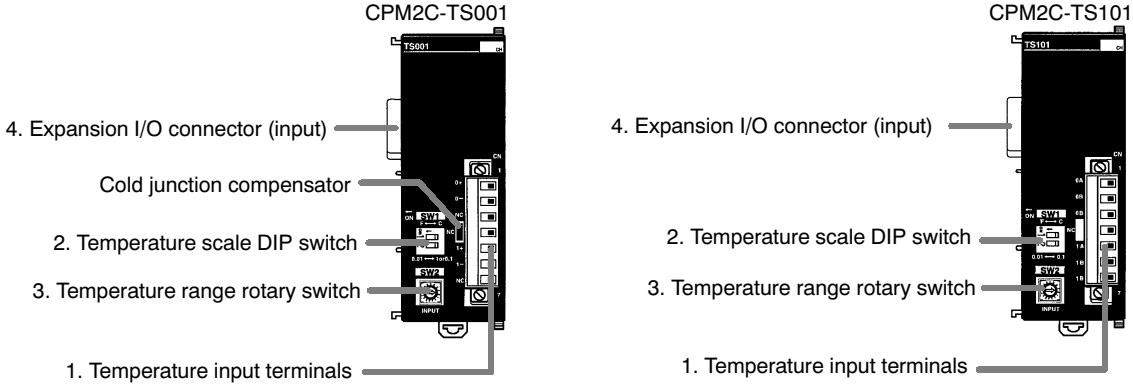

Item	CPM2C-TS001	CPM2C-TS101
Temperature sensors	Thermocouples Switchable between Types K and J, but same type must be used for all inputs.	Platinum resistance thermometer Switchable between Pt100 and JPt100, but same type must be used for all inputs.
Number of inputs	2	
Allocated input words	2	
Max. number of modules	4	4
Temperature ranges	Type K: −200° to 1300°C, 0.0° to 500.0°C −300° to 2300°F, 0.0° to 900.0°F Type J: −100° to 850°C, 0.0° to 400.0°C −100° to 1500°F, 0.0° to 750.0°F	Both Pt100 and JPt100: −200.0° to 650.0°C −300.0° to 1200.0°F
Accuracy (See Note 2)	The larger of ±0.5% of converted value or ±2°C, ±1 digit max. (See Note 1)	The larger of ±0.5% of converted value or ±1°C, ±1 digit max.
Conversion time	250 ms for 2 input points	
Converted temperature data	16-bit binary data (4-digit hexadecimal)	
Isolation	Photocouplers between all temperature input signals	

Note: 1. Accuracy for a K-type sensor at −100°C or less is ±4°C ±1 digit max.
2. The error deviation for temperatures in °F is double that for °C.

CompoBus/S I/O Link Module CPM2C-SRT21

The CPM2C controller can function as a Slave to a CompoBus/S Master Module when a CPM2C-SRT21 CompoBus/S I/O Link Module is connected. The CompoBus/S I/O Link Module links 8 inputs and 8 outputs between the Master Module and the CPM2C. Up to 5 Expansion I/O Modules or Expansion Modules can be connected to a CPM2C CPU.

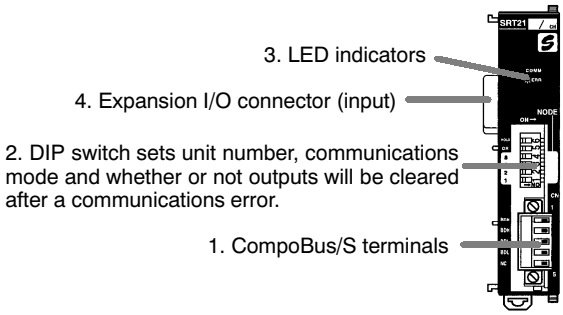

Number of I/O bits	8 input bits, 8 output bits
Max. number of connectable nodes	16
Number of words occupied in CPM2C I/O memory	1 input word, 1 output word (Allocated in the same way as other Expansion I/O Modules or Expansion Modules)
Node number setting	Set using the DIP switch.

Note: See the CompoBus/S section of Omron's *Remote I/O and Wiring Solutions Catalog (GC RIO1)* for more details on CompoBus/S communications.

■ SERIAL COMMUNICATIONS MODULES

CPM2C-CIF01-V1
Mini-peripheral/RS-232C Adapter Unit

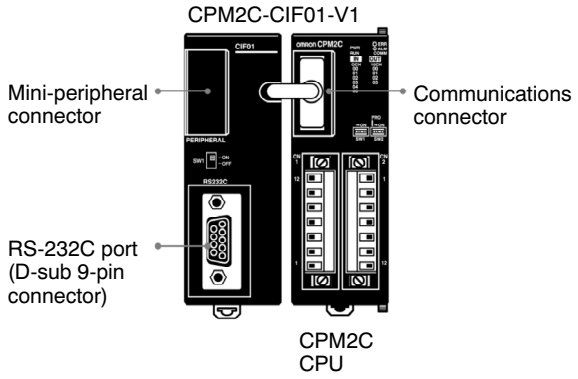

CPM2C-CIF11
RS-422/RS-232C Adapter Unit

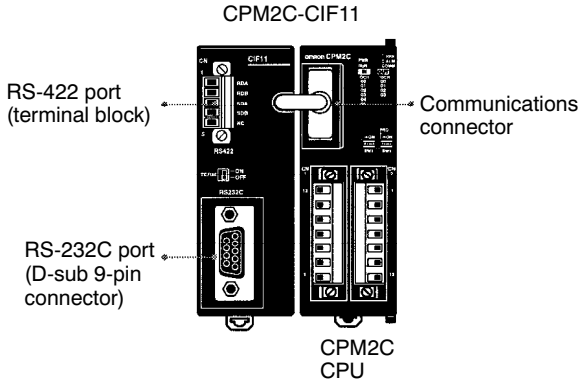

Internal Configuration

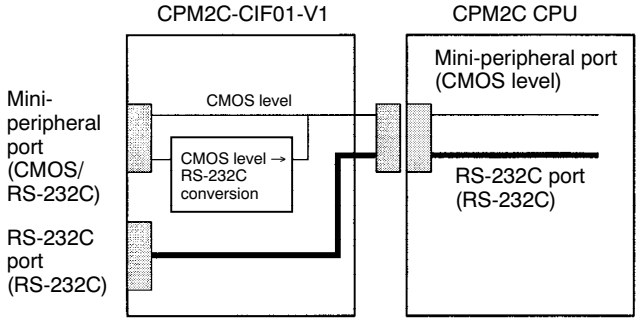

Note: When using the CS1W-CN226/CN626 Connecting Cable for personal computer connection, turn ON the switch.

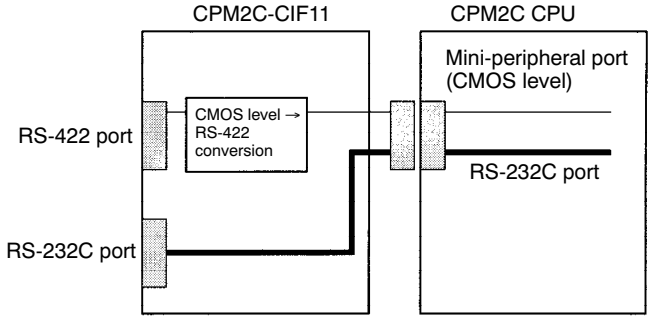

Note: A Programming Console cannot be connected to the RS-422 port.

CPM2C-CIF01-V1/CIF11 Specifications

Item		Specification	
		CPM2C-CIF01-V1	CPM2C-CIF11
Upper port	Signal conversion	Outputs signals from the CPU's CMOS interface without conversion, or converts CMOS level (CPU side) to RS-232C (connected device side).	Converts CMOS level (CPU side) to RS-422 (connected device side). RS-422 (externally connected device) insulated using DC/DC converter or photocoupler.
	Function	Host Link, peripheral bus, no-protocol, or Programming Console connections.	Host Link, peripheral bus, or no-protocol connections.
Lower port	Signal conversion	Outputs signals from the CPU's CMOS interface without conversion.	Outputs signals from the CPU's CMOS interface without conversion.
	Function	Host Link, no-protocol, 1:1 Link, or 1:1 NT Link connections.	Host Link, no-protocol, 1:1 Link, or 1:1 NT Link connections.
Power supply		Power supplied from CPU.	
Current consumption		0.3 A max. at 5 V	
Weight		150 g max.	

Note: Neither the CPM2C-CIF01-V1 nor the CPM2C-CIF11 can be used with any PC other than the CPM2C. A CPM2C-CIF11 or another CPM2C-CIF01-V1 cannot be connected to the CPM2C if a CPM2C-CIF01-V1 is already connected to it.

■ COMPOWAY/F SERIAL INTERFACE MODULE

CPM2C-CIF21

The CompoWay/F Serial Interface Module exchanges data between the CPU's DM area and OMRON components (temperature controllers, electronic timers/counters, and digital panel meters). This eliminates the need for ladder programming used to transfer data between the CPU and the supported OMRON components. Up to 32 OMRON components equipped with the CompoWay/F or SYSWAY communications can be connected.

Front View

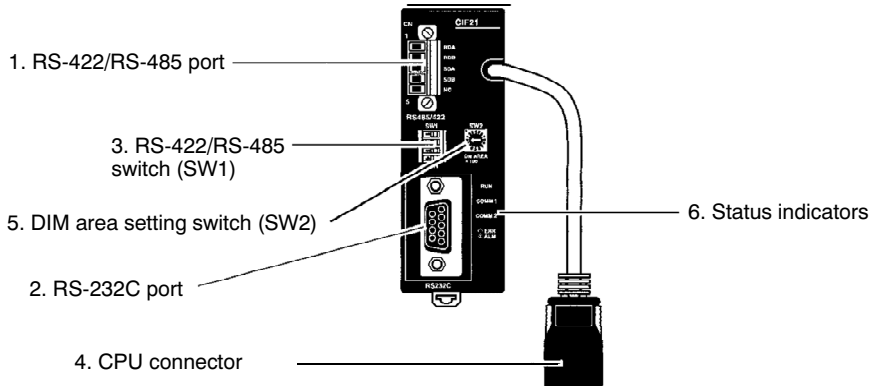

Internal Configuration

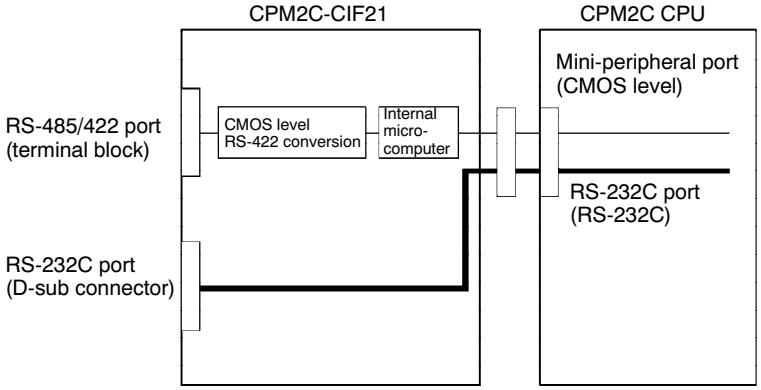

CPM2C-CIF21 Specifications

Item		Specification
Applicable PLC		CPM2C
RS-485/422 (top port)	Maximum number of connectable components	32
	Component connection port	Components connected to RS-485/422 terminal block. Connected to CPM2C CPU via peripheral port.
	Baud rate for connection to components	9.6, 19.2, 38.4, or 57.6 kbps
	Baud rate for connection to CPU	9.6 or 19.2 kbps
RS-232C (bottom port)	Signal conversion	Output from CPU's RS-232C interface with no conversions.
	Communications functions	One of the following: Host Link, no-protocol, 1:1 Link, 1:1 NT Link
Power supply		From CPU
Power consumption		1 W
Weight		150 g max.

Note: The CPM2C-CIF21 can only be used with the CPM2C.

Dimensions

Unit: mm (inch)

■ CPUS

CPU with Relay Outputs
(CPM2C-10CDR-D, CPM2C-10C1DR-D
CPM2C-20CDR-D, CPM2C-20C1DR-D)

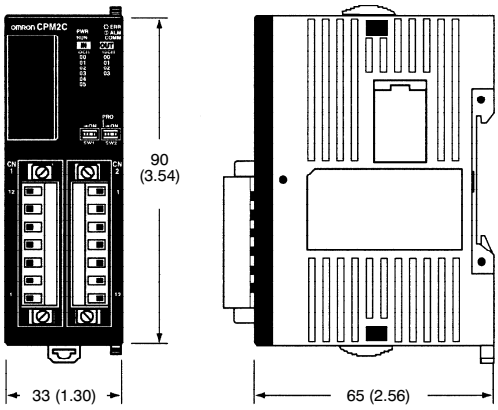

CPU with Transistor Outputs and Fujitsu Connectors
(CPM2C-10/20/32CDTC-D, CPM2C-10/20/32C1DTC-D,
CPM2C-10/20CDT1C-D, CPM2C-10/20C1DT1C-D)

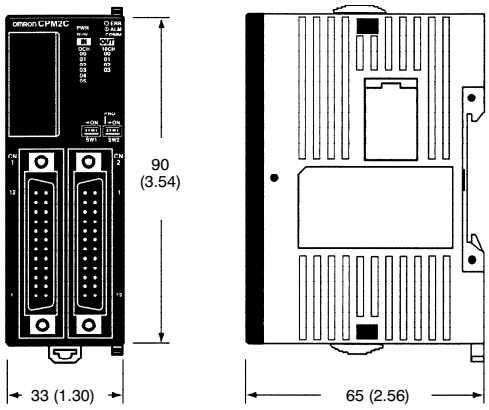

CPU with Transistor Outputs and MIL Connectors
(CPM2C-10/20/32CDTM-D, CPM2C-10/20C1DTM-D,
CPM2C-10/20/32CDT1M-D, CPM2C-10/20C1DT1M-D)

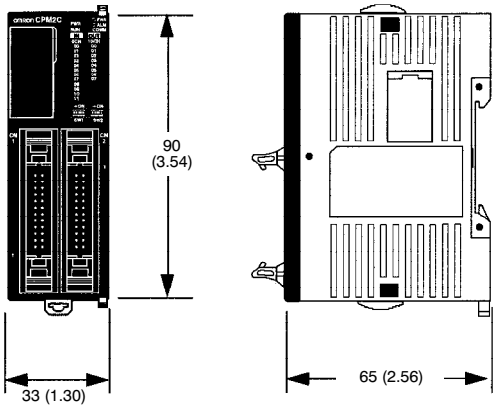

■ EXPANSION I/O MODULES

Unit: mm (inch)

Modules with Relay Outputs (CPM2C-8ER, CPM2C-10EDR)

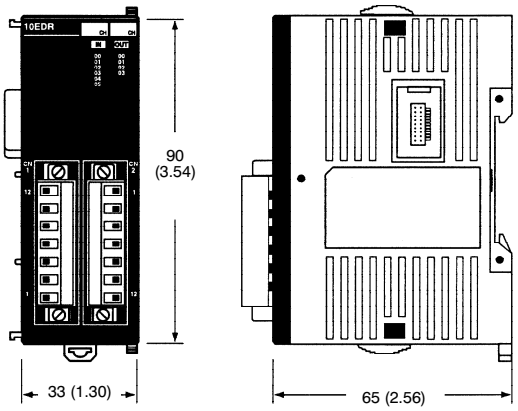

Modules with Transistor Outputs (CPM2C-24/32EDTC, CPM2C-24/32EDT1C)

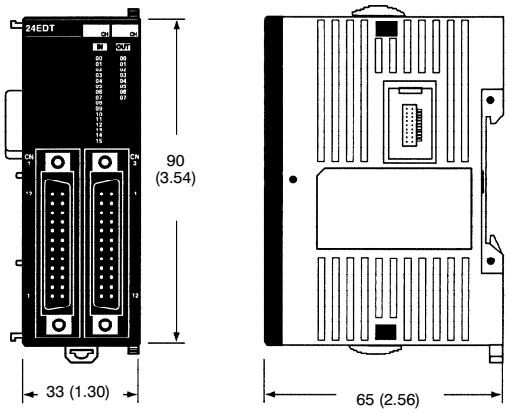

Modules with Transistor Outputs Only and Modules with Inputs Only (CPM2C-8EDC, CPM2C-8ETC, CPM2C-8ET1C, CPM2C-16EDC, CPM2C-16ETC, CPM2C-16ET1C)

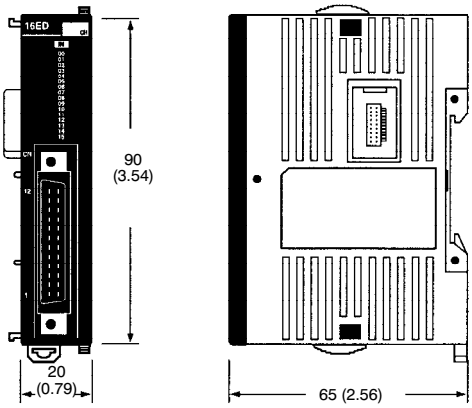

Modules with 20 Relay I/O (CPM2C-20EDR-D)

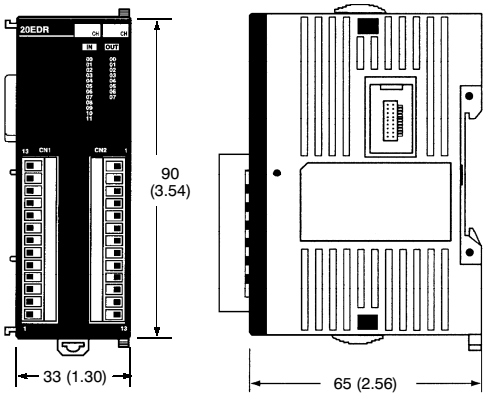

Modules with Inputs or Outputs Only (CPM2C-8EDM, CPM2C-8ETM, CPM2C-8ET1M, CPM2C-16EDM, CPM2C-16ETM, CPM2C-16ET1M)

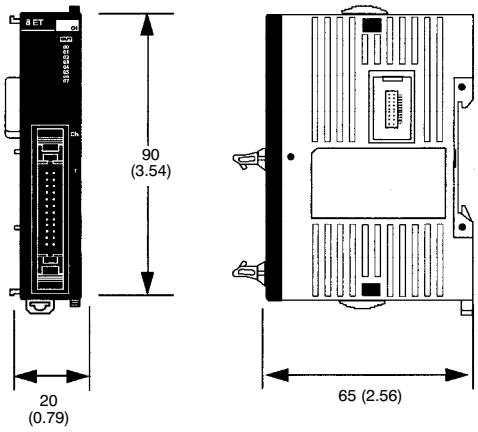

Modules with Transistor Outputs and MIL Connectors (CPM2C-24/32EDTM, CPM2C-24/32EDT1M)

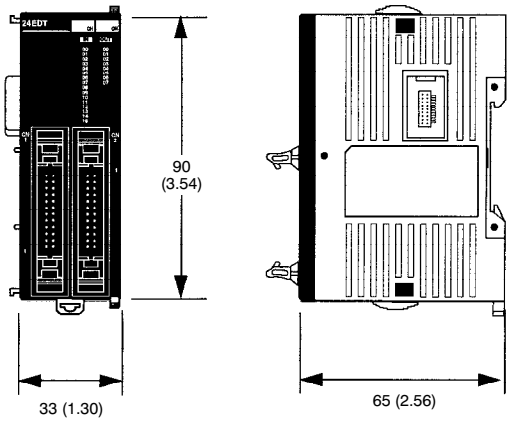

Unit: mm (inch)

AC Power Supply (CPM2C-PA201)

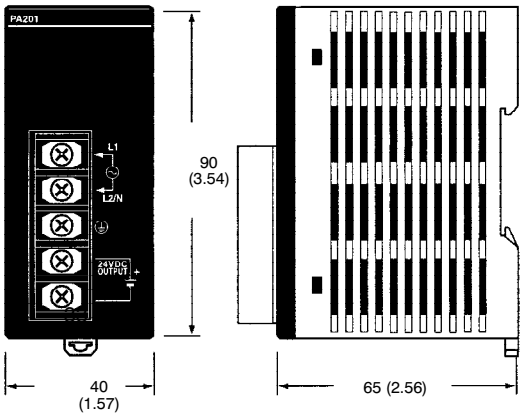

Mini-peripheral/RS-232C Adapter Module (CPM2C-CIF01-V1)

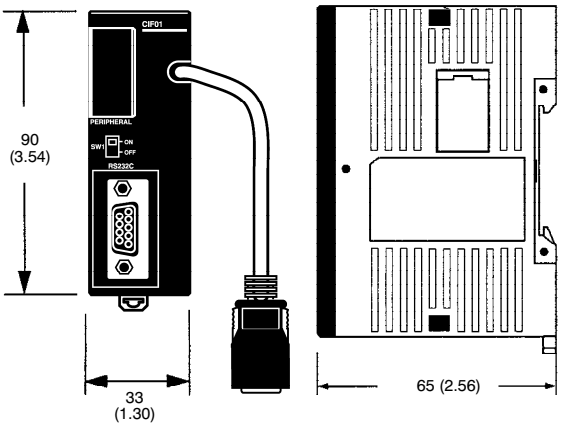

RS-232C and RS-422/RS-485 Adapter Module (CPM2C-CIF11)

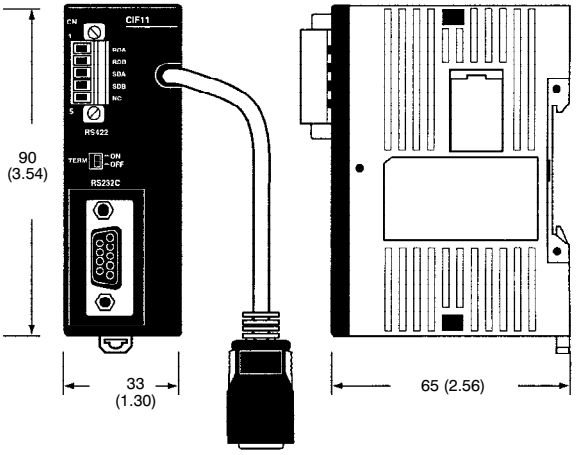

CompoWay/F Serial Interface Module (CPM2C-CIF21)

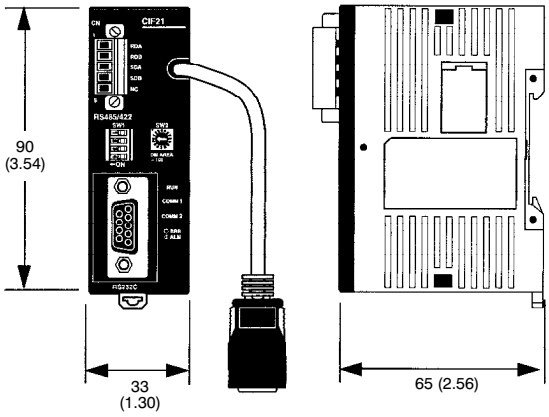

■ DEDICATED I/O MODULES

Unit: mm (inch)

CPM2C-MAD11 Analog I/O Module

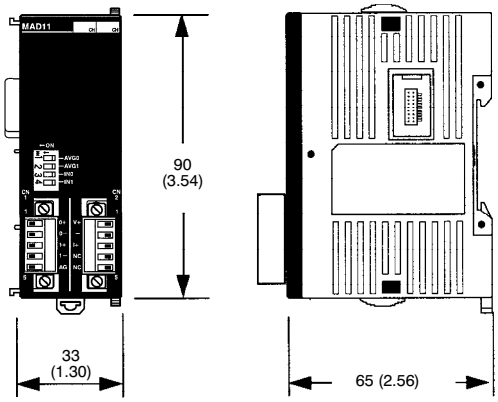

CPM2C-TS001, CPM2C-TS101
Temperature Sensor Modules

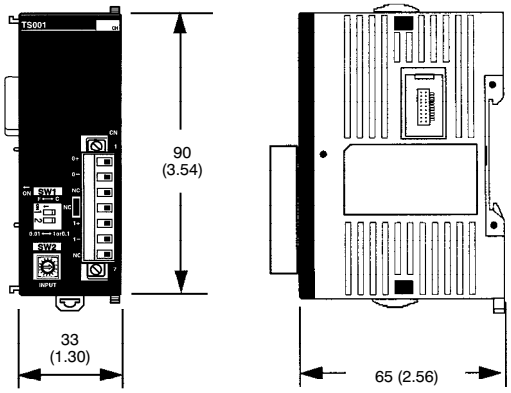

CPM2C-SRT21 CompoBus/S I/O Link Module

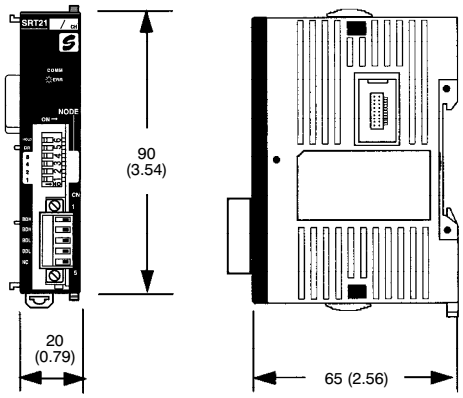

■ CPM2C MODULES WITH CONNECTORS ATTACHED

Unit: mm (inch)

Modules with Relay Outputs

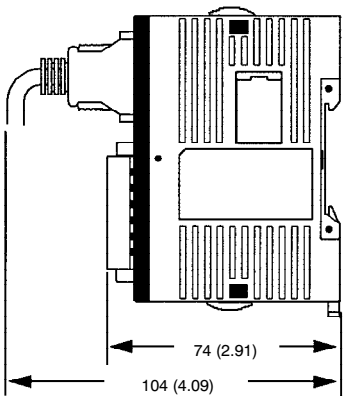

Modules with Transistor Outputs (Using pressure connectors)

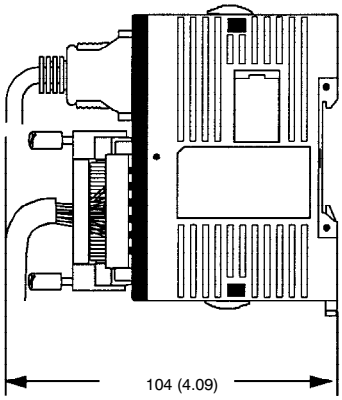

Modules with Transistor Outputs (Using soldered connectors)

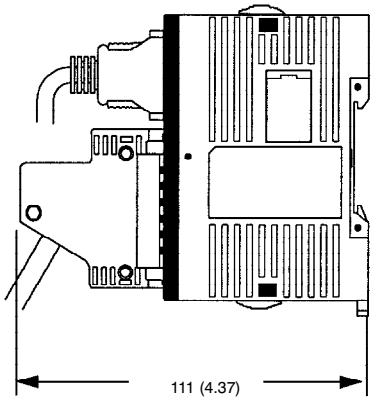

Units with Transistor Outputs and MIL Connectors

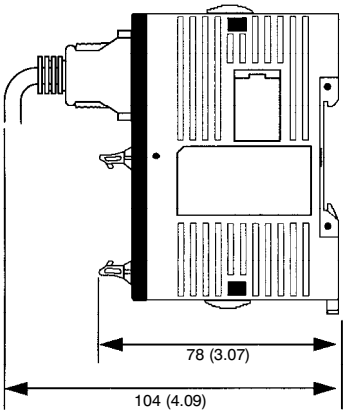

Functions

The CPM2C programmable controllers offer a variety of features in a compact Unit, including synchronized pulse control, interrupt inputs, pulse outputs, and a clock function. The CPM2C CPU can handle a broad range of machine control applications and it is small enough to be incorporated as the control unit in almost any free-standing machine.

The full complement of communications functions lets you communicate with personal computers, other OMRON PLCs, and OMRON Programmable Terminals. These communications capabilities allow the user to design a low-cost, effective control system.

The communications port can be used simultaneously as two ports: Mini-peripheral and RS-232C. The mini-peripheral port supports Programming Devices, Host Link, and no-protocol communications. The RS-232C port supports Host Link, no-protocol (serial), 1:1 Link, and 1:1 NT Link communications.

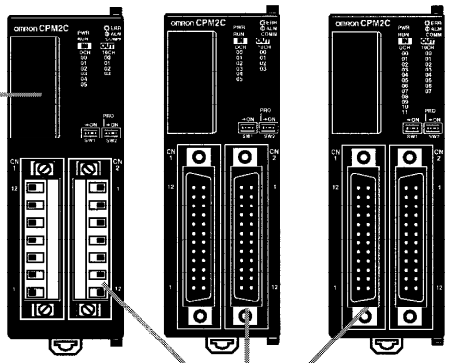

CPUs with 10 I/O points (relay or transistor outputs) and 20 or 32 I/O points (transistor outputs only) are available. Expansion I/O Units can be connected to increase capacity to 192 I/O points.

■ TIME-PROPORTIONAL CONTROL

The CPM2C performs simple-to-program, time-proportional control using up to four Analog I/O modules (maximum 8 analog inputs and 4 analog outputs) and the PID and PWM expansion instructions. These instructions set the parameters for PID control and a pulse output with variable duty ratio. For increased reliability, an open-circuit detection function can be used with the 1 to 5 VDC and 4 to 20 mA analog input settings.

For temperature monitoring applications, CPM2C accepts up to 8 inputs (two per module) from Temperature Sensor Input modules. The PID instruction can manipulate the input from either thermocouple or platinum resistance thermometer sensors.

■ DISTRIBUTED I/O CONTROL

Omron's CompoBus/S I/O Link provides distributed CPU control based on a "PLC + compact PLC" configuration which provides improvements over distributed control based on "PLC + remote I/O" configurations. The distributed CPU control makes equipment module, so designs can be standardized, special needs can be addressed and modules can be replaced easily in the event of breakdown without affecting the main CPU.

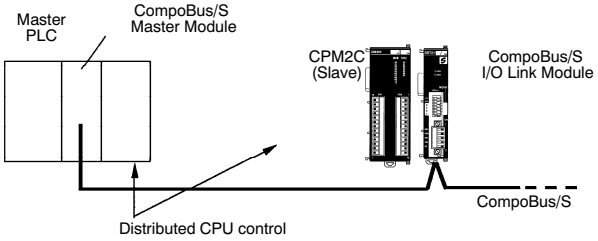

■ BUILT-IN MOTOR CONTROL CAPABILITY

Synchronized Pulse Control (Transistor Output Models Only)

Synchronized pulse control provides an easy way to synchronize the operation of a peripheral piece of equipment with the main equipment. The output pulse frequency can be controlled as some multiple of the input pulse frequency, allowing the speed of a peripheral piece of equipment (such as a supply conveyor) to be synchronized with the speed of the main piece of equipment.

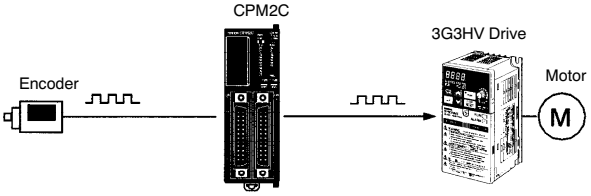

Pulses are output as a fixed multiple of the input frequency.

■ HIGH-SPEED COUNTERS AND INTERRUPTS

The CPM2C has up to four high-speed counter inputs. The one high-speed counter input has a response frequency of 20 kHz/5 kHz, and the four interrupt inputs (in counter mode) have a response frequency of 2 kHz.

Four Input Modes

The high-speed counter can be used in any one of the four input modes: differential phase mode (5 kHz), pulse plus direction input mode (20 kHz), up/down pulse mode (20 kHz), or increment mode (20 kHz). Interrupts can be triggered when the count matches a set value or falls within a specified range.

Interrupt Inputs

The interrupt inputs (counter mode) can be used for incrementing counters or decrementing counters (2 kHz) and trigger an interrupt (executing the interrupt program) when the count matches the target value. Use this for target-value comparison or range comparison control that is unaffected by the cycle time.

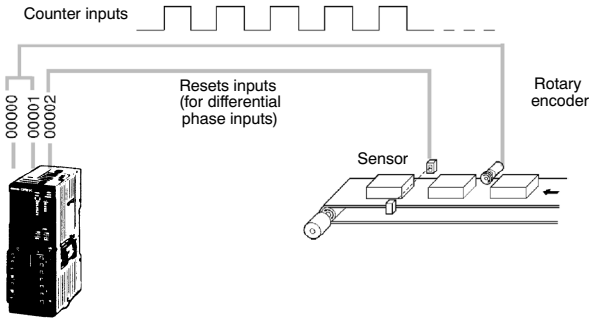

Easy Position Control with Pulse Outputs (transistor output models only)

The CPM2C PLCs with transistor outputs have two outputs that can produce 10 Hz to 10 kHz pulses (single-phase outputs).

When used as single-phase pulse outputs, there can be two outputs with a frequency range of 10 Hz to 10 kHz with a fixed duty ratio or 0.1 to 999.9 Hz with a variable duty ratio (0 to 100% duty ratio).

When used as pulse plus direction or up/down pulse outputs, there can be just one output with a frequency range of 10 Hz to 10 kHz.

Input	Response frequency	Input mode (count value)	Control method
00000 00001 00002	5 kHz	Differential phase input mode (-8,388,608 to 8,388,607)	Target value comparison interrupts Range comparison interrupts
	20 kHz	Pulse + direction input mode (-8,388,608 to 8,388,607) Up/down pulse input mode (-8,388,608 to 8,388,607) Increment mode (0 to 16,777,215)	

■ PULSE OUTPUTS (TRANSISTOR OUTPUT MODELS ONLY)

The CPM2C has two pulse outputs. You can configure these outputs as two single-phase outputs without acceleration and deceleration, two variable duty-ratio pulse outputs, or pulse outputs with trapezoidal acceleration/deceleration (one pulse + direction output and one up/down pulse output). The pulse output's PV coordinate system can also be specified in the PLC Setup as either relative or absolute.

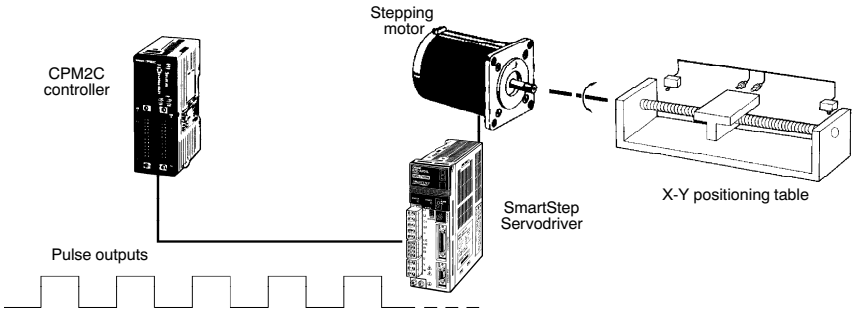

Item		Single-phase pulse output without acceleration/deceleration	Variable duty-ratio pulse output	Single-phase pulse output with trapezoidal acceleration/deceleration			
				Pulse + direction output		Up/down pulse output	
Controlling instruction(s)		PULS(65) and SPED(64)	PWM(--)	PULS(65) and ACC(--)			
Output number	01000	Pulse output 0 (See Note.)	Pulse output 0 (See Note.)	Pulse output 0	Pulse output	Pulse output 0	CW pulse output
	01001	Pulse output 1 (See Note.)	Pulse output 1 (See Note.)		Direction output		CCW pulse output
Output frequency range		10 Hz to 10 kHz	0.1 Hz to 999.9 Hz	10 Hz to 10 kHz		10 Hz to 10 kHz	
	Pitch	10 Hz	0.1 Hz	10 Hz		10 Hz	
Duty ratio		50%	0 to 100%	50%		50%	

Note: With single-phase pulse outputs, pulse outputs 0 and 1 can each be output independently.

Application Example: Adjusting Film/Paper Web Speed in Packaging and Printing

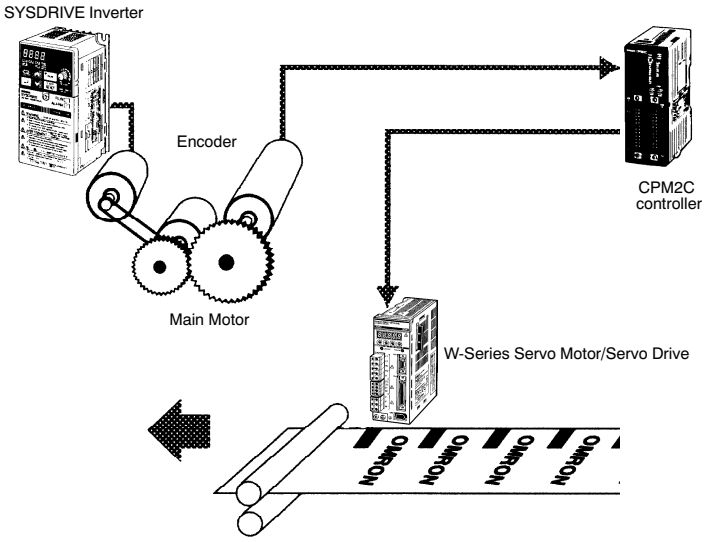

■ HIGH-SPEED INPUT CAPABILITIES FOR MACHINE CONTROL

High-speed Interrupt Input Function

The 20- and 32-point CPUs have 4 inputs that can be used as interrupt inputs and the 10-point CPUs have 2 inputs that can be used as interrupt inputs. These inputs are shared with quick-response inputs and interrupt inputs in counter mode and have a minimum input signal width of 50 μs and response time of 0.3 ms. When an interrupt input goes ON, the main program is stopped and the interrupt program is executed.

Quick-response Input Function

Regardless of the cycle time, the 20-point and 32-point CPUs have 4 inputs that can be used as quick-response inputs and the 10-point CPUs have 2 inputs that can be used as quick-response inputs. These inputs are shared with interrupt inputs and interrupt inputs in counter mode; they can reliably read input signals with a signal width as short as 50 μs.

Stabilizing Input Filter Function

The input time constant for all inputs can be set to 1 ms, 2 ms, 3 ms, 5 ms, 10 ms, 20 ms, 40 ms, or 80 ms. The effects of chattering and external noise can be reduced by increasing the input time constant.

■ OTHER FUNCTIONS

Analog Settings

There are two controls on the CPU that can be turned to change the analog settings (0 to 200 BCD) of timers and counters. These controls can be used to easily change or fine-tune machine settings such as a conveyor belt's pause time or feed rate.

Calendar/Clock

The CPUs with a built-in clock (accuracy within 1 minute/month) can be read from the program to show the current year, month, day, day of the week, and time. The clock can be set from a programming device (such as a Programming Console) or the time can be adjusted by rounding up or down to the nearest minute.

Long-term Timer

The long-term timer provides an easy way to control equipment scheduling. Use two instructions to set this up. The long-term timer instruction (TIML) lets you set values up to 99,990 seconds (27 hours, 46 minutes, 30 seconds) and the Seconds-to-Hours conversion instruction (HMS) lets you schedule this with other clock functions.

■ CONNECTIONS TO OPERATOR INTERFACE TERMINALS

The CPM2C can be connected directly to an OMRON Operator Interface Terminal in NT Link Mode (1:1) for high speed transmission of data. No separate drivers are required. Use the communications port for the NT Link connection.

There are two ways to configure NT Link depending on the communications port's setting for single or dual transmission (host link style).

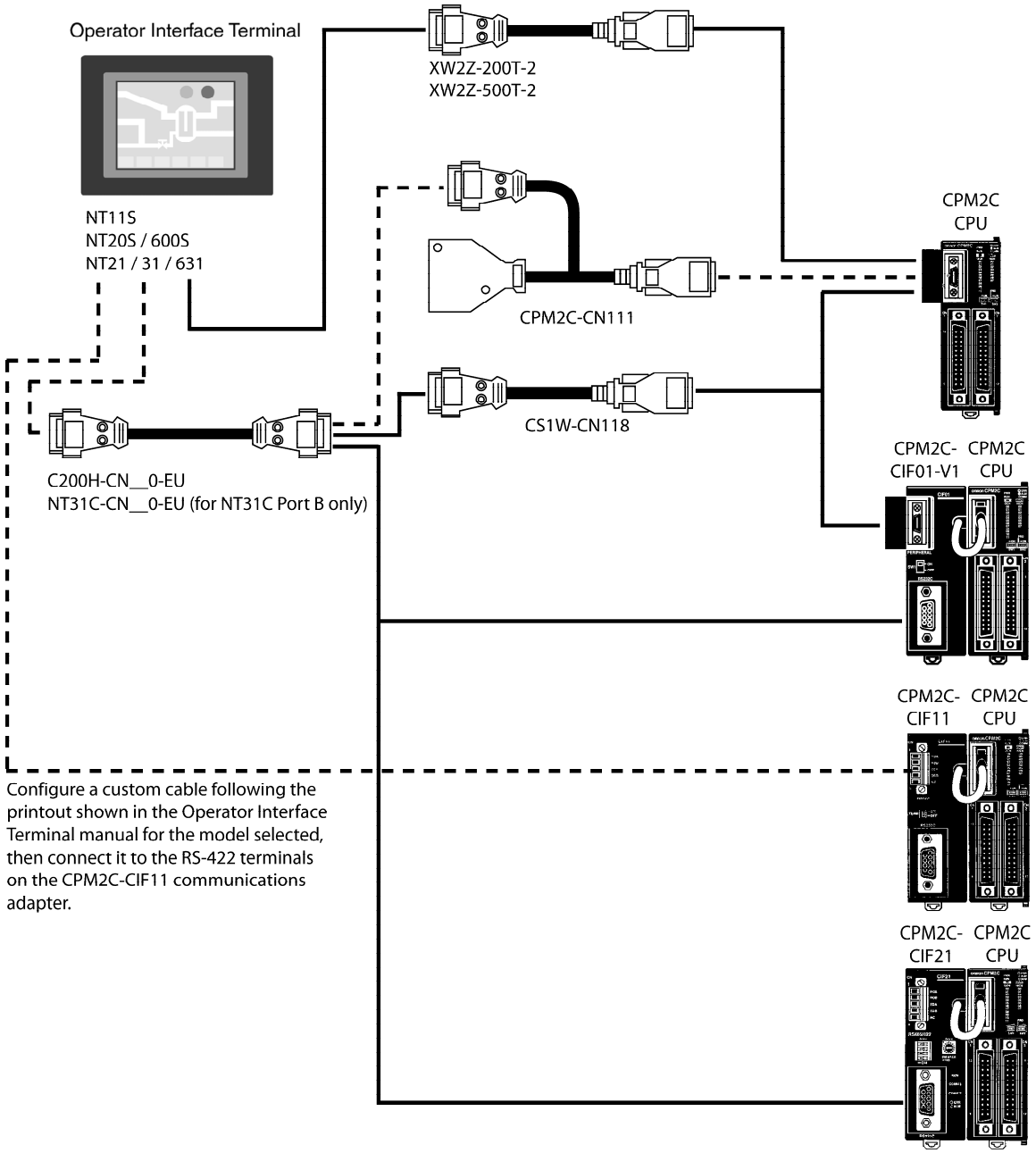

Note: The Operator Interface Terminal cannot be connected using a peripheral port connection when communicating via an NT Link.

■ HOST LINK

1:1 Connection

Use one of the connecting cables shown in the following diagram to connect a personal computer with Support Software to the CPM2C's communications port for 1:1 Host Link communications or no-protocol (serial) communications.

RS-232C Port Connection

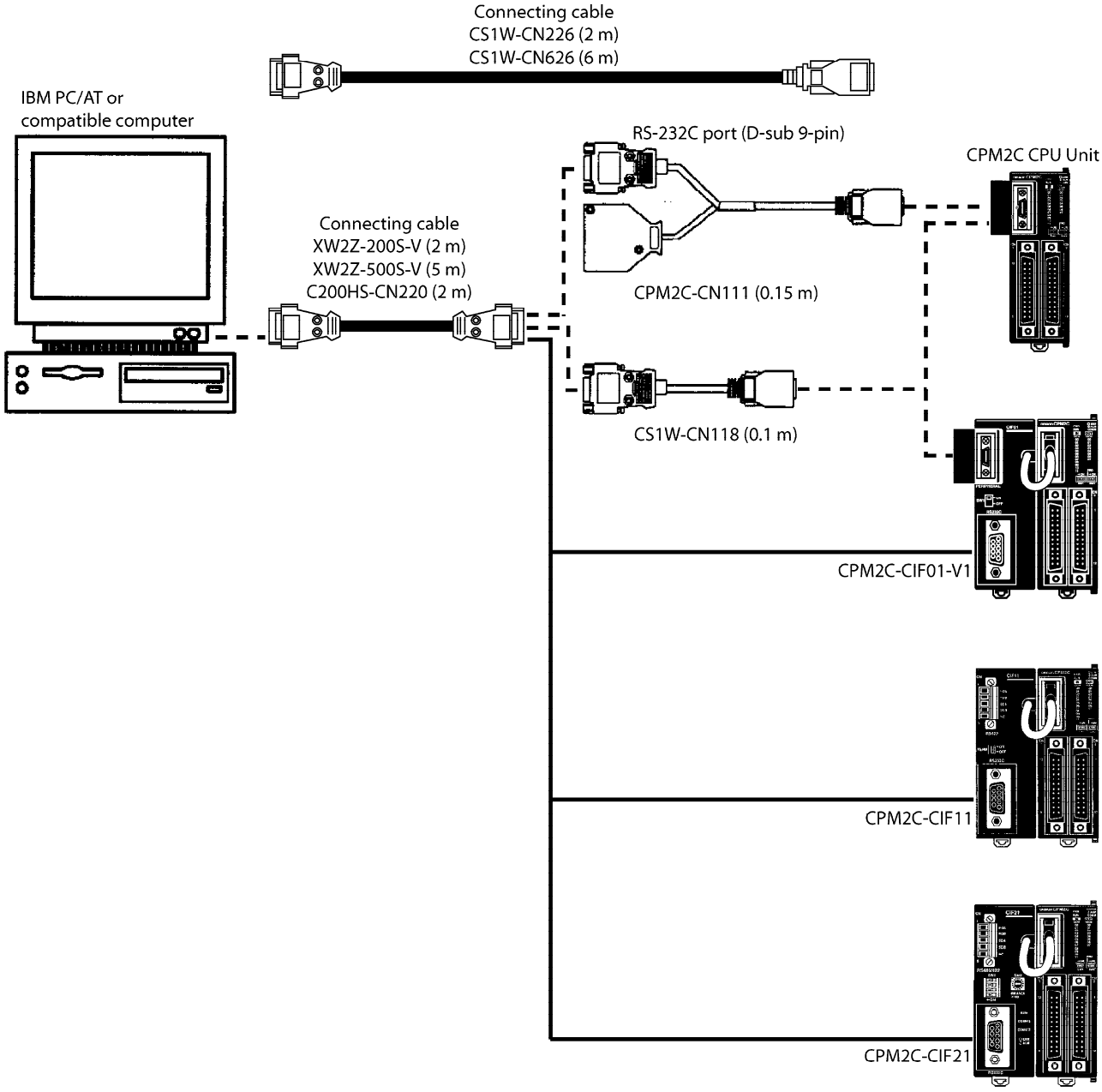

Peripheral Port Connection

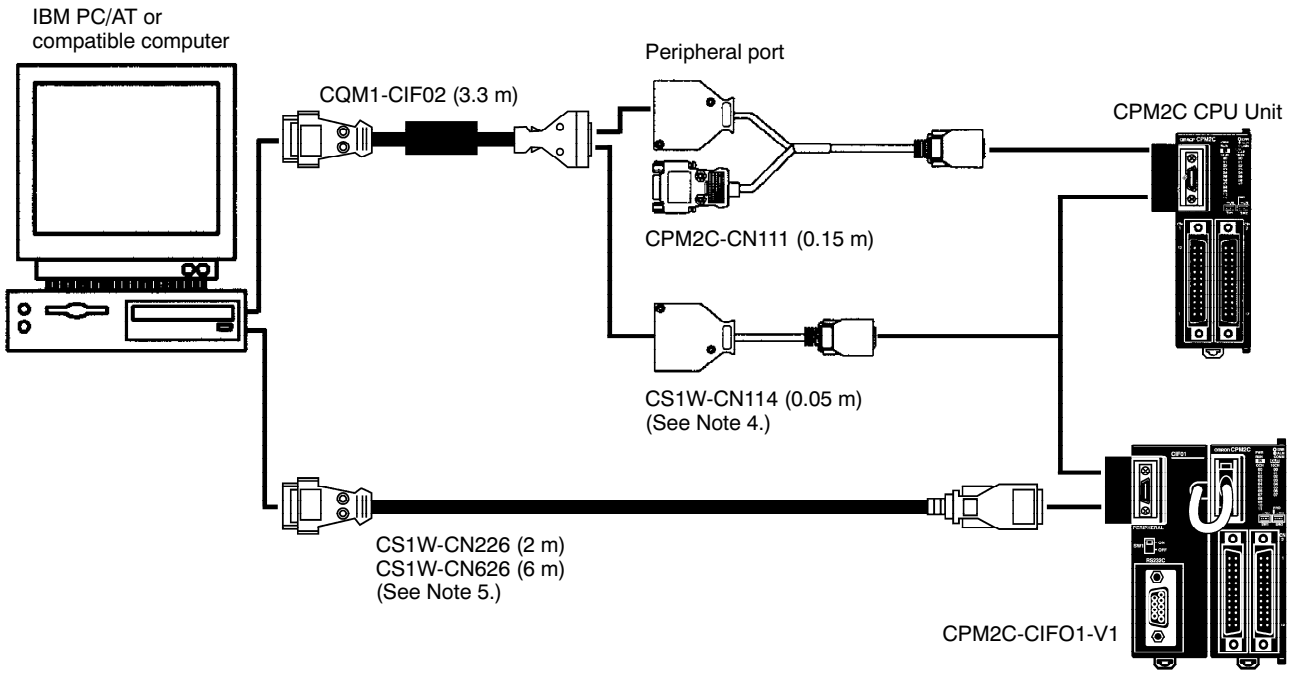

Note: 1. The CS1W-CN226/626 Connecting Cables cannot be used to connect to the CPM2C-CIF01. They can be used to connect to the CPM2C-CIF01-V1 only. Turn OFF the cable switch (SW1) on the front panel when using these cables. (Turn OFF SW1 when using any other cable.)

2. The CS1W-CN225/625 and CS1W-CN227/627 Connecting Cables cannot be used.
3. The CQM1-CIF11 Connecting Cable cannot be used. If one is connected, the CPM2C will not recognize it and, for this reason, the PC will enter RUN mode at startup if the PC Setup (DM 6600) is at the default settings (i.e., the start up mode depends on whether or not a Programming Device is connected).
4. When connecting the CS1W-CN118 to the mini-peripheral port of the CPM2C-CIF01-V1 Peripheral/RS-232C Adapter Unit, turn OFF the cable switch (SW1).
5. When connecting the CS1W-CN226/626 to the mini-peripheral port of the CPM2C-CIF01-V1 Peripheral/RS-232C Adapter Unit, turn ON the cable switch (SW1).

1:N Connection

Up to 32 OMRON PLCs, including CPM2C PLCs, can be connected to a host computer.

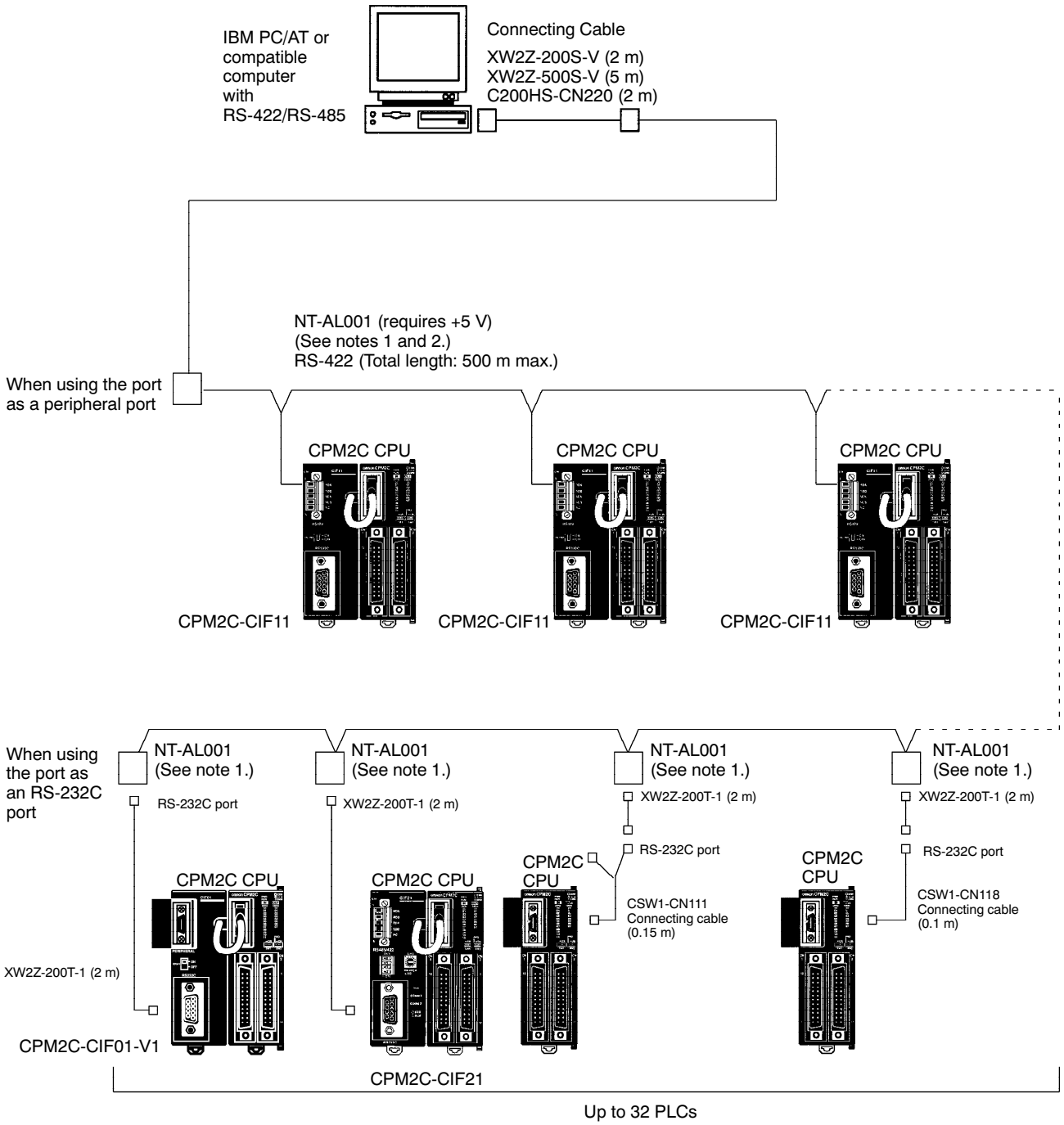

Note: 1. The NT-AL001 must be supplied externally with 5 VDC. When an NT-AL001 is connected to a CPM2C PC, pin 6 of the CPM2C's RS-232C port supplies +5 VDC and an external power supply is not necessary.

2. Be sure that the power supply requirements of the CPU, Expansion Modules, and Expansion I/O Modules do not exceed the available capacity. Only three Expansion I/O Modules and Expansion Modules can be connected when the NT-AL001 Adapter is connected to the RS-232C port.

■ NO-PROTOCOL COMMUNICATIONS

The transmit TXD(48) and receive RXD(47) instructions can be used in no-protocol mode to exchange data with standard serial devices. For example, data can be received from a bar code reader or transmitted to a serial printer. The serial devices can be connected to the communications port as an RS-232C port or mini-peripheral port, as shown in the following diagrams. Some adapter cables may be required.

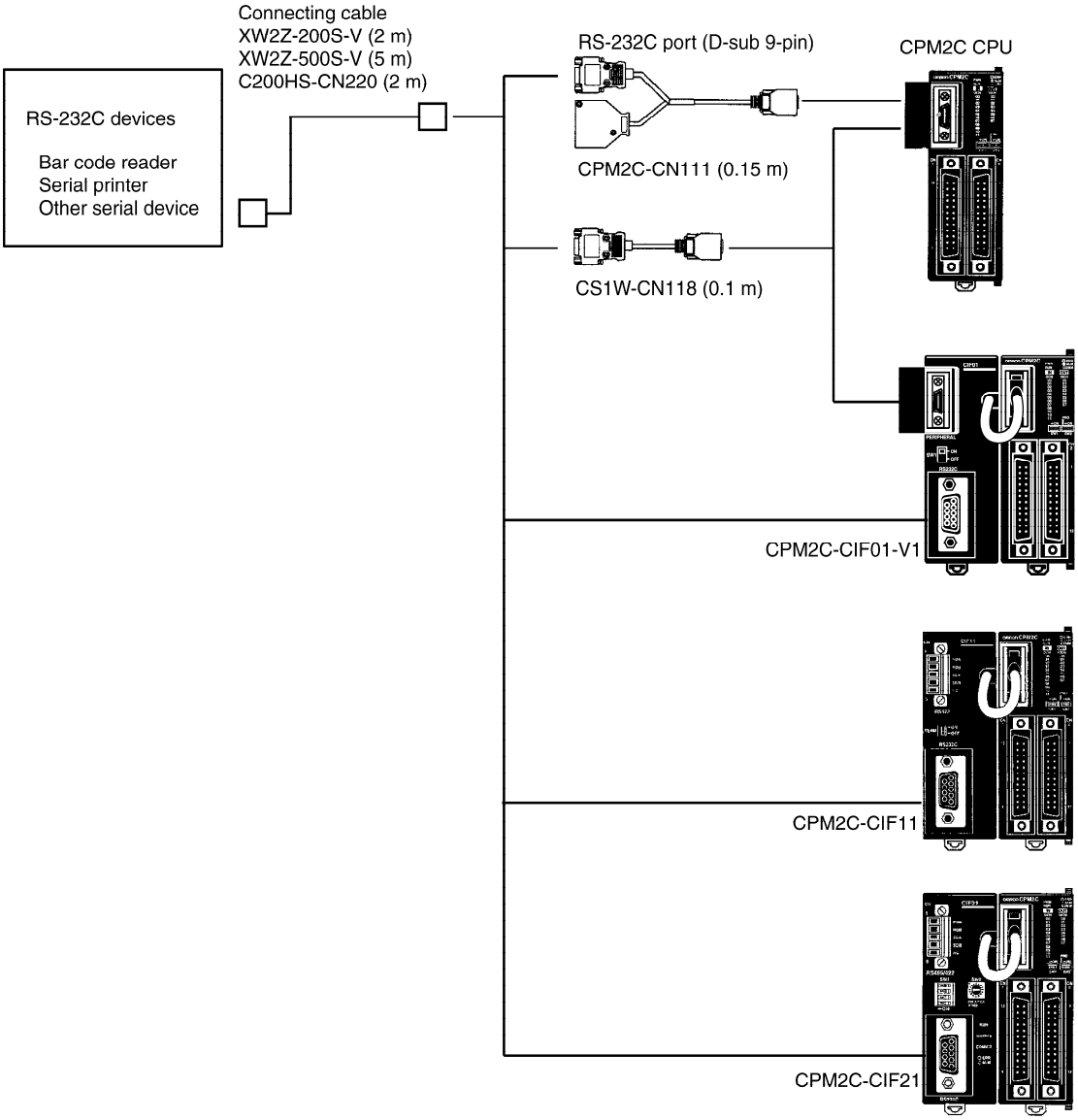

■ 1:1 LINK CONNECTIONS FOR DATA EXCHANGE

A CPM2C can be linked to another CPM2C, a CQM1, CPM1, CPM1A, CPM2A, C200HS, or C200HX/HE/HG PLC. The PLC must be connected using the communications port as an RS-232C port (not as a peripheral port).

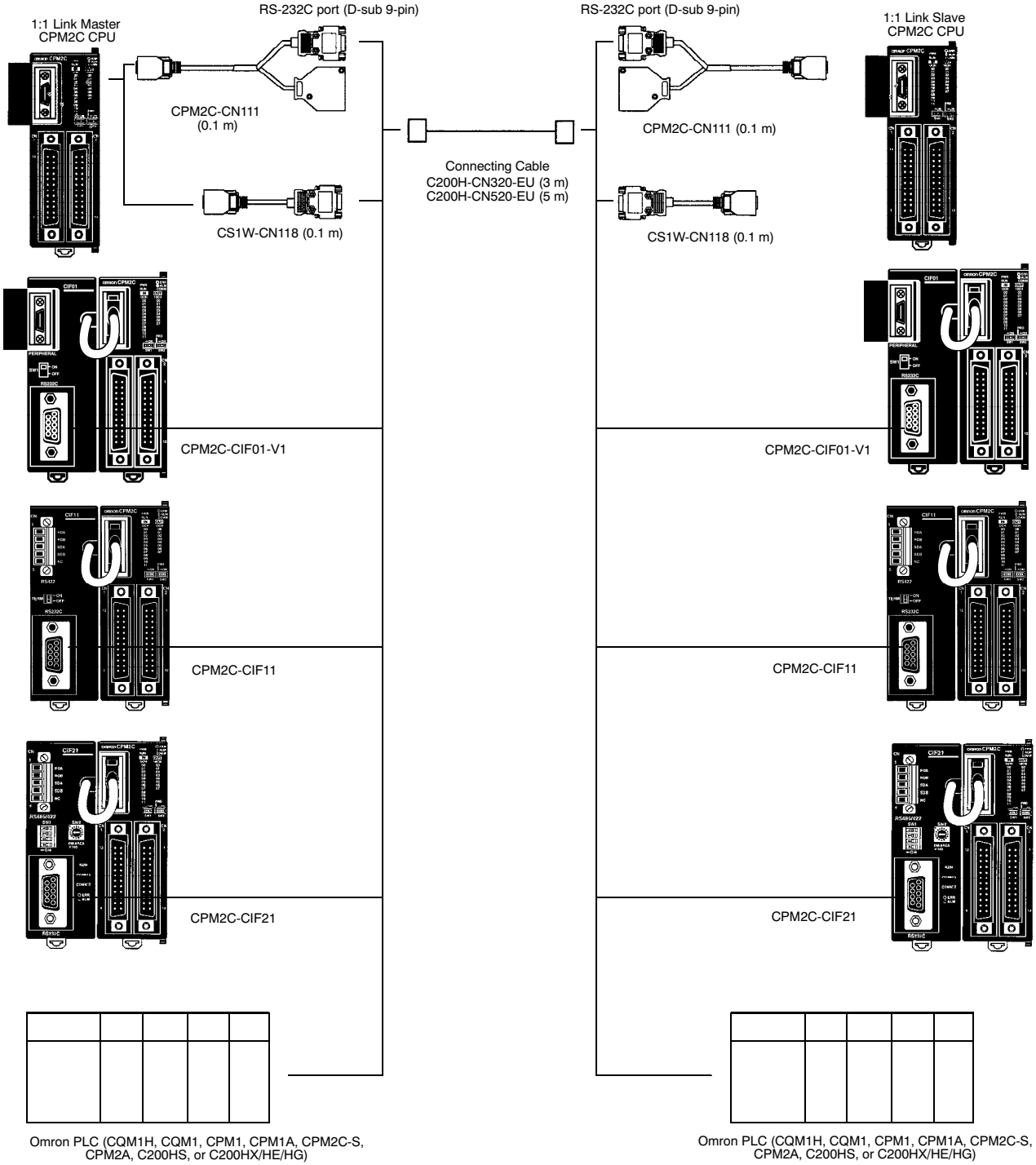

Note: Even though the peripheral port on the CPM2C-CIF01-V1 can output RS-232C, this port cannot be used for one-to-one link communications.

■ COMPOBUS/S I/O LINK CONNECTIONS

A CompoBus/S I/O Link can be used to create an I/O link (remote I/O) of 8 input points and 8 output points with a CompoBus/S Master Module. The connection is made through a CompoBus/S I/O Link Module.

From the standpoint of the CPM2C CPU, the area allocated to the CompoBus/S I/O Link Module can be treated just like the area allocated to an Expansion I/O Module. The difference is that the bits are not actual I/O points, but I/O bits in the Master Module.

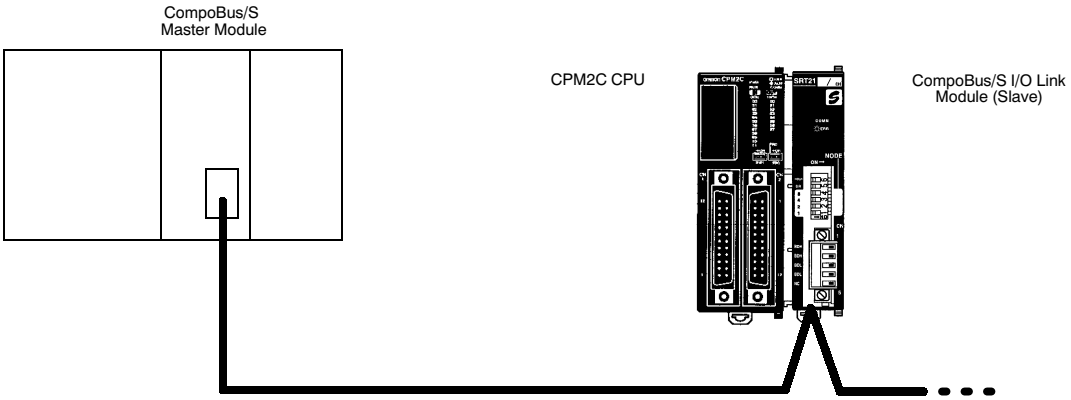

Cables

Use SCA1-4F10 flat cable or twisted pair cable to connect the nodes in the CompoBus/S I/O Link. (The flat cables and twisted pair cables cannot be combined in the same system.)

Description	Model	Specifications
Flat cable	SCA1-4F10	4-core flat cable, 0.75 mm^2; 100 m length
Twisted pair cable	Belden #9409 cable	2-core x 0.75 mm^2; available commercially

■ PROGRAM TRANSFER UNIT

Use Omron's EEPROM program transfer unit to update programs in machines or program multiple controllers with the same program. The CPM1-EMU01-V1 Expansion Memory Unit connects to the peripheral port of micro and small PLCs.

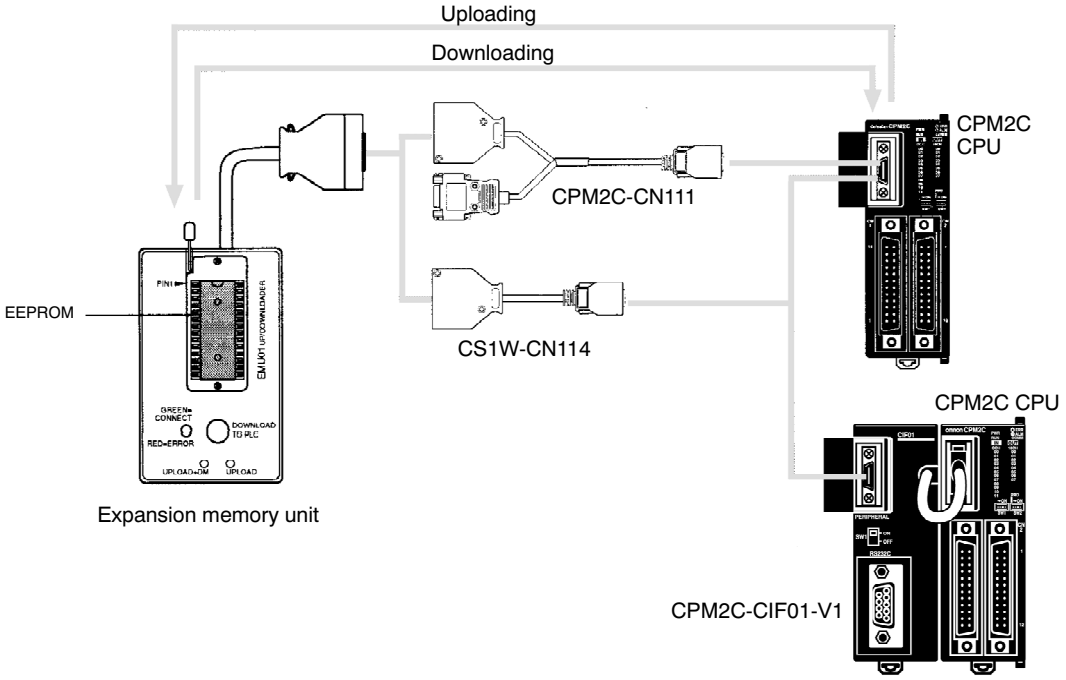

Note: The "PLC" in the "DOWNLOAD TO PLC" Button indicates PCs (Programmable Controllers).

OMRON

Certain Terms and Conditions of Sale

1. Offer; Acceptance. These terms and conditions (these "Terms") are deemed part of all catalogs, manuals or other documents, whether electronic or in writing, relating to the sale of goods or services (collectively, the "Goods") by Omron Electronics LLC and its subsidiary companies ("Seller"). Seller hereby objects to any terms or conditions proposed in Buyer's purchase order or other documents which are inconsistent with, or in addition to, these Terms. Please contact your Omron representative to confirm any additional terms for sales from your Omron company.
2. Prices. All prices stated are current, subject to change without notice by Seller. Buyer agrees to pay the price in effect at time of shipment.
3. Discounts. Cash discounts, if any, will apply only on the net amount of invoices sent to Buyer after deducting transportation charges, taxes and duties, and will be allowed only if (i) the invoice is paid according to Seller's payment terms and (ii) Buyer has no past due amounts owing to Seller.
4. Orders. Seller will accept no order less than $200 net billing.
5. Governmental Approvals. Buyer shall be responsible for, and shall bear all costs involved in, obtaining any government approvals required for the importation or sale of the Goods.
6. Taxes. All taxes, duties and other governmental charges (other than general real property and income taxes), including any interest or penalties thereon, imposed directly or indirectly on Seller or required to be collected directly or indirectly by Seller for the manufacture, production, sale, delivery, importation, consumption or use of the Goods sold hereunder (including customs duties and sales, excise, use, turnover and license taxes) shall be charged to and remitted by Buyer to Seller.
7. Financial. If the financial position of Buyer at any time becomes unsatisfactory to Seller, Seller reserves the right to stop shipments or require satisfactory security or payment in advance. If Buyer fails to make payment or otherwise comply with these Terms or any related agreement, Seller may (without liability and in addition to other remedies) cancel any unshipped portion of Goods sold hereunder and stop any Goods in transit until Buyer pays all amounts, including amounts payable hereunder, whether or not then due, which are owing to it by Buyer. Buyer shall in any event remain liable for all unpaid accounts.
8. Cancellation; Etc. Orders are not subject to rescheduling or cancellation unless Buyer indemnifies Seller fully against all costs or expenses arising in connection therewith.
9. Force Majeure. Seller shall not be liable for any delay or failure in delivery resulting from causes beyond its control, including earthquakes, fires, floods, strikes or other labor disputes, shortage of labor or materials, accidents to machinery, acts of sabotage, riots, delay in or lack of transportation or the requirements of any government authority.
10. Shipping; Delivery. Unless otherwise expressly agreed in writing by Seller:
    a. Shipments shall be by a carrier selected by Seller;
    b. Such carrier shall act as the agent of Buyer and delivery to such carrier shall constitute delivery to Buyer;
    c. All sales and shipments of Goods shall be FOB shipping point (unless otherwise stated in writing by Seller), at which point title to and all risk of loss of the Goods shall pass from Seller to Buyer, provided that Seller shall retain a security interest in the Goods until the full purchase price is paid by Buyer;
    d. Delivery and shipping dates are estimates only.
    e. Seller will package Goods as it deems proper for protection against normal handling and extra charges apply to special conditions.
11. Claims. Any claim by Buyer against Seller for shortage or damage to the Goods occurring before delivery to the carrier must be presented in writing to Seller within 30 days of receipt of shipment and include the original transportation bill signed by the carrier noting that the carrier received the Goods from Seller in the condition claimed.
12. Warranties. (a) Exclusive Warranty. Seller's exclusive warranty is that the Goods will be free from defects in materials and workmanship for a period of twelve months from the date of sale by Seller (or such other period expressed in writing by Seller). Seller disclaims all other warranties, express or implied. (b) Limitations. SELLER MAKES NO WARRANTY OR REPRESENTATION, EXPRESS OR IMPLIED, ABOUT NON-INFRINGEMENT, MERCHANTABILITY OR FITNESS FOR A PARTICULAR PURPOSE OF THE GOODS. BUYER ACKNOWLEDGES THAT IT ALONE HAS DETERMINED THAT THE GOODS WILL SUITABLY MEET THE REQUIREMENTS OF THEIR INTENDED USE. Seller further disclaims all warranties and responsibility of any type for claims or expenses based on infringement by the Goods or otherwise of any intellectual property right. (c) Buyer Remedy. Seller's sole obligation hereunder shall be to replace (in the form originally shipped with Buyer responsible for labor charges for removal or replacement thereof) the non-complying Good or, at Seller's election, to repay or credit Buyer an amount equal to the purchase price of the Good; provided that in no event shall Seller be responsible for warranty, repair, indemnity or any other claims or expenses regarding the Goods unless Seller's analysis confirms that the Goods were properly handled, stored, installed and maintained and not subject to contamination, abuse, misuse or inappropriate modification. Return of any goods by Buyer must be approved in writing by Seller before shipment. Seller shall not be liable for the suitability or unsuitability or the results from the use of Goods in combination with any electrical or electronic components, circuits, system assemblies or any other materials or substances or environments. Any advice, recommendations or information given orally or in writing, are not to be construed as an amendment or addition to the above warranty.
13. Damage Limits; Etc. SELLER SHALL NOT BE LIABLE FOR SPECIAL, INDIRECT OR CONSEQUENTIAL DAMAGES, LOSS OF PROFITS OR PRODUCTION OR COMMERCIAL LOSS IN ANY WAY CONNECTED WITH THE GOODS, WHETHER SUCH CLAIM IS BASED IN CONTRACT, WARRANTY, NEGLIGENCE OR STRICT LIABILITY. Further, in no event shall liability of Seller exceed the individual price of the Good on which liability is asserted.
14. Indemnities. Buyer shall indemnify and hold harmless Seller, its affiliates and its employees from and against all liabilities, losses, claims, costs and expenses (including attorney's fees and expenses) related to any claim, investigation, litigation or proceeding (whether or not Seller is a party) which arises or is alleged to arise from Buyer's acts or omissions under these Terms or in any way with respect to the Goods. Without limiting the foregoing, Buyer (at its own expense) shall indemnify and hold harmless Seller and defend or settle any action brought against Seller to the extent that it is based on a claim that any Good made to Buyer specifications infringed intellectual property rights of another party.
15. Property; Confidentiality. The intellectual property embodied in the Goods is the exclusive property of Seller and its affiliates and Buyer shall not attempt to duplicate it in any way without the written permission of Seller. Notwithstanding any charges to Buyer for engineering or tooling, all engineering and tooling shall remain the exclusive property of Seller. All information and materials supplied by Seller to Buyer relating to the Goods are confidential and proprietary, and Buyer shall limit distribution thereof to its trusted employees and strictly prevent disclosure to any third party.
16. Miscellaneous. (a) Waiver. No failure or delay by Seller in exercising any right and no course of dealing between Buyer and Seller shall operate as a waiver of rights by Seller. (b) Assignment. Buyer may not assign its rights hereunder without Seller's written consent. (c) Amendment. These Terms constitute the entire agreement between Buyer and Seller relating to the Goods, and no provision may be changed or waived unless in writing signed by the parties.
    (d) Severability. If any provision hereof is rendered ineffective or invalid, such provision shall not invalidate any other provision. (e) Setoff. Buyer shall have no right to set off any amounts against the amount owing in respect of this invoice. (f) As used herein, "including" means "including without limitation".

Certain Precautions on Specifications and Use

1. Suitability of Use. Seller shall not be responsible for conformity with any standards, codes or regulations which apply to the combination of the Good in the Buyer's application or use of the Good. At Buyer's request, Seller will provide applicable third party certification documents identifying ratings and limitations of use which apply to the Good. This information by itself is not sufficient for a complete determination of the suitability of the Good in combination with the end product, machine, system, or other application or use. The following are some examples of applications for which particular attention must be given. This is not intended to be an exhaustive list of all possible uses of this Good, nor is it intended to imply that the uses listed may be suitable for this Good:
    (i) Outdoor use, uses involving potential chemical contamination or electrical interference, or conditions or uses not described in this document.
    (ii) Energy control systems, combustion systems, railroad systems, aviation systems, medical equipment, amusement machines, vehicles, safety equipment, and installations subject to separate industry or government regulations.
    (iii) Systems, machines and equipment that could present a risk to life or property. Please know and observe all prohibitions of use applicable to this Good.

    NEVER USE THE PRODUCT FOR AN APPLICATION INVOLVING SERIOUS RISK TO LIFE OR PROPERTY WITHOUT ENSURING THAT THE SYSTEM AS A WHOLE HAS BEEN DESIGNED TO ADDRESS THE RISKS, AND THAT THE SELLER'S PRODUCT IS PROPERLY RATED AND INSTALLED FOR THE INTENDED USE WITHIN THE OVERALL EQUIPMENT OR SYSTEM.
2. Programmable Products. Seller shall not be responsible for the user's programming of a programmable Good, or any consequence thereof.
3. Performance Data. Performance data given in this catalog is provided as a guide for the user in determining suitability and does not constitute a warranty. It may represent the result of Seller's test conditions, and the user must correlate it to actual application requirements. Actual performance is subject to the Seller's Warranty and Limitations of Liability.
4. Change in Specifications. Product specifications and accessories may be changed at any time based on improvements and other reasons. It is our practice to change part numbers when published ratings or features are changed, or when significant construction changes are made. However, some specifications of the Good may be changed without any notice. When in doubt, special part numbers may be assigned to fix or establish key specifications for your application. Please consult with your Seller's representative at any time to confirm actual specifications of purchased Good.
5. Errors and Omissions. The information in this catalog has been carefully checked and is believed to be accurate; however, no responsibility is assumed for clerical, typographical or proofreading errors, or omissions.

Complete "Terms and Conditions of Sale" for product purchase and use are on Omron's website at www.omron.com/oei – under the "About Us" tab, in the Legal Matters section.

ALL DIMENSIONS SHOWN ARE IN MILLIMETERS.
To convert millimeters into inches, multiply by 0.03937. To convert grams into ounces, multiply by 0.03527.

OMRON®

OMRON ELECTRONICS LLC
One Commerce Drive
Schaumburg, IL 60173
847-843-7900
For US technical support or other inquiries:
800-556-6766

OMRON CANADA, INC.
885 Milner Avenue
Toronto, Ontario M1B 5V8
416-286-6465

OMRON ON-LINE
Global - http://www.omron.com
USA - http://www.omron.com/oei
Canada - http://www.omron.ca

Cat. No. R301-E3-01 2/04 Specifications subject to change without notice Printed in USA