DATA SHEET

# F200 B Type

Cutting-edge features: safety, service continuity, compactness, integration. These are the characteristics of the F200 B RCCBs (residual current circuit breakers), the state-of-the-art technology by ABB which has been providing the best solutions for residential, commercial and industrial installations for over 120 years.

—
01
F202 B and F204 B: residual current circuit breakers

Type B RCCBs can be adapted perfectly to all types of installation requirements and application fields.

F200 B is compliant to product standard IEC/EN 61008 and EN 62423 and features the following main technical characteristics:

- Rated current: from 16 A to 125 A
- Sensitivity: 30, 300 and 500 mA
- Operating temperature: -25 °C to +70 °C (for system up to 32 A)
- Pollution degree 3 (for 16–63 A devices, 30–300 mA)

**Applications benefits:**

- Terminals equipped with fail safe feature to avoid improper installation
- Supply possible both from top and bottom and in parallel with cables and busbars thanks to terminals composed by two different seats: a front seat for 25 mm² cables and a back seat for 10 mm² busbars
- Compact solution with just 2 Pole devices in 2 DIN Module
- Compatible with a wide range of accessories with lots of different functions
- Great performance over time thanks to high immunity against unwanted tripping and robustness to operating environment
- Certified quality and compliance to worldwide product standard



sales@prom-elec.com / ООО ПРОМЭЛЕКТРОНИКА

# RCCBs

## F 200 series - B type technical features

| | | | | F200 B Type | | F200 B Type high ratings |
|---|---|---|---|---|---|---|
| | | | | **F202 B 16-63 A** | **F204 B 25-63 A** | **F204 B 80-125 A** |
| | Standards | | | IEC/EN 61008-1, IEC/EN 61008-2-1, EN 62423 | | |
| Electrical features | Type (wave form of the earth leakage sensed) | | | B | B, B-S | B |
| | Poles | | | 2P | 4P | 4P |
| | Rated current $I_n$ | | A | 16, 25, 40, 63 | 25, 40, 63 | 80, 125 |
| | Rated sensitivity $I_{\Delta n}$ | | A | 0,03 - 0,3 | 0,03 - 0,3 - 0,5 | 0,03 - 0,3 - 0,5 |
| | Rated voltage $U_e$ | | V AC | 230 | 230/400 | 230/400 |
| | Insulation voltage $U_i$ | | V | 440 | 440 - 500 [1] | 400 |
| | Operating voltage of circuit test $U_t$ | IEC/EN | V | 110 - 253 V AC<br>170 - 253 V AC (30 mA) | 110 - 253 V AC<br>170 - 253 V AC (30 mA) | 150 - 250 V AC (80 A)<br>200 - 250 V AC (80 A, 30 mA)<br>200 - 440 V AC (125 A)<br>250 - 440 V AC (125A, 30 mA) |
| | Min. operating voltage for detecting Type A/AC/F residual currents | | V AC | 0 | 0 | 0 |
| | Min. operating voltage for detecting Type B residual currents | | V AC | 50 | 50 | 50 |
| | Rated frequency | | Hz | 50/60 | 50/60 | 50 |
| | Frequency range of residual current | | kHz | 2 | 2 | 100 |
| | Rated conditional short-circuit current Inc=$I_\Delta$ [3] | SCPD - fuse gG/gL 100 A | kA | 10 | 10 | 10 (fuse gG 125 A) |
| | Rated residual breaking capacity $I_{\Delta m}$=Im | | kA | 1 | 1 | 125 A: 1,25<br>80 A: 1 |
| | Rated impulse withstand voltage (1.2/50) $U_{imp}$ | | kV | 4 | 4 | 4 |
| | Dielectric test voltage at ind. freq. for 1 min. | | kV | 2,5 | 2,5 | 2,5 |
| | Overvoltage category | | | III, disconnector abilities | | |
| | Surge current resistance (wave 8/20) | | A | 3.000 | 3.000 - 5.000 (B S) | 3.000 - 5.000 (B S) |
| | Maximum electronic consumption | | W | 0,3 | 1,2 (3,5 [1]) | |
| Mechanical features | Toggle | | | Blue sealable in ON-OFF | | |
| | Contact position indicator (CPI) | | | yes | yes | yes |
| | Electrical life | | | 10.000 | 10.000 | 2.000 |
| | Mechanical life | | | 20.000 | 20.000 | 5.000 |
| | Protection degree | housing | | IP4X | IP4X | IP4X |
| | | terminals | | IP2X | IP2X | IP2X |
| | Environmental conditions (damp heat) acc. to IEC/EN 60068-2-30 | | °C/ RH | 28 cycles with 55°C/90-96% and 25°C/95-100% | | |
| | Ambient temperature | IEC | °C | -25...+70 (for system current <= 32 A) [4]<br>-25...+65 for system current = 40 A [4]<br>-25...+50 for system current = 63 A [4]<br>For other system current see derating table | | -25...+40 [5] |
| | Storage temperature | | °C | 40...+70 | | |
| Installation | Terminal Type | | | Failsafe bi-directional cylinder-lift terminal at top and bottom (shock protected) (cage for $I_n$ > 63 A) [2] | | |
| | Min/Max Terminal size top/bottom for cable | IEC | $Mm^2$ | 1 - 25 | 1 - 25 | 50 |
| | Terminal size top/bottom for busbar | IEC | $Mm^2$ | 10/10 | 10/10 | |
| | Tightening torque | IEC | Nm | 2,8 | | 3 |
| | Tool | | | Flat tip PZ2 | | |
| | Mounting | | | Any position on DIN rail EN 60715 (35 mm) by means of fast clip device | | |
| | Supply | | | Top/bottom | | |
| | Withdrawal from busbar | | | It is possible without using any tools only from the bottom | | no |
| Dimensions and weight | Dimensions (H x D x W) | 2P | Mm | 85 x 69 x 35 | 85 x 69 x 70 | 85 x 69,5 x 72 |
| | Weight | 2P | g | 200 | 380 | 460 |
| Combination with auxiliary elementsi | Combinable with: | | | | | |
| | auxiliary contact | | | yes | yes | no |
| | signal contact/auxiliary switch | | | yes | yes | yes |
| | motor operating device | | | yes | yes | no |
| | shunt trip | | | yes | yes | no |
| | undervoltage release | | | yes | yes | no |

[1] 500 mA devices
[2] Prior to connection of aluminium conductors (≥ 4 mm2) ensure that their contact points are cleaned, brushed and coated with grease
[3] For S750-E 63 A, S750DR-E/K 100 A and other SCPD back up coordination values are available.
[4] Costant temperature.
[5] With daily average < 35°C.

# RCCBs

## F 200 series - B type

### F200 B Type from 16 to 63 A

F202 B

F204 B

| Number of poles | Rated residual current IΔn mA | Rated current In A | Bbn 8012542 EAN | Order details Type code | Order code | Weight 1 piece kg | Pack unit pc. |
|---|---|---|---|---|---|---|---|
| 2 | 30 | 16 | 341154 | F202 B-16/0,03 | 2CSF202568R1160 | 0,220 | 1 |
| | | 25 | 341253 | F202 B-25/0,03 | 2CSF202568R1250 | 0,220 | 1 |
| | | 40 | 341352 | F202 B-40/0,03 | 2CSF202568R1400 | 0,220 | 1 |
| | | 63 | 341154 | F202 B-63/0,03 | 2CSF202568R1630 | 0,220 | 1 |
| | 300 | 16 | 341451 | F202 B-16/0,3 | 2CSF202568R3160 | 0,220 | 1 |
| | | 25 | 341550 | F202 B-25/0,3 | 2CSF202568R3250 | 0,220 | 1 |
| | | 40 | 341659 | F202 B-40/0,3 | 2CSF202568R3400 | 0,220 | 1 |
| | | 63 | 341758 | F202 B-63/0,3 | 2CSF202568R3630 | 0,220 | 1 |
| 4 | 30 | 25 | 341857 | F204 B-25/0,03 | 2CSF204568R1250 | 0,380 | 1 |
| | | 40 | 341956 | F204 B-40/0,03 | 2CSF204568R1400 | 0,380 | 1 |
| | | 63 | 342052 | F204 B-63/0,03 | 2CSF204568R1630 | 0,380 | 1 |
| | 300 | 25 | 342151 | F204 B-25/0,3 | 2CSF204568R3250 | 0,380 | 1 |
| | | 40 | 342250 | F204 B-40/0,3 | 2CSF204568R3400 | 0,380 | 1 |
| | | 63 | 342359 | F204 B-63/0,3 | 2CSF204568R3630 | 0,380 | 1 |
| | 300 S | 40 | 342458 | F204 B S-40/0,3 | 2CSF204868R3400 | 0,380 | 1 |
| | | 63 | 342557 | F204 B S-63/0,3 | 2CSF204868R3630 | 0,380 | 1 |
| | 500 | 40 | 776932 | F204 B-40/0,5 [2] | 2CSF204592R4400 | 0,380 | 1 |
| | | 63 | 347637 | F204 B-63/0,5 [2] | 2CSF204592R4630 | 0,380 | 1 |
| | 500 S | 40 | 357834 | F204 B S-40/0,5 [2] | 2CSF204892R4400 | 0,380 | 1 |
| | | 63 | 347538 | F204 B S-63/0,5 [2] | 2CSF204892R4630 | 0,380 | 1 |
| 2 | 30 | 25 | 356356 | F202 B-25/0,03 U | 2CSF202568U1250 | 0,220 | 48 |
| 4 | 30 | 25 | 356158 | F204 B-25/0,03 U | 2CSF204568U1250 | 0,380 | 24 |
| | | 40 | 355953 | F204 B-40/0,03 U | 2CSF204568U1400 | 0,380 | 24 |
| | | 63 | 356059 | F204 B-63/0,03 U | 2CSF204568U1630 | 0,380 | 24 |
| | 300 | 63 | 356257 | F204 B-63/0,3 U | 2CSF204568U3630 | 0,380 | 24 |

### F200 B Type high ratings

F204 B 80, 125 A

| Number of poles | Rated residual current IΔn mA | Rated current In A | Bbn 8012542 EAN | Order details Type code | Order code | Weight 1 piece kg | Pack unit pc. |
|---|---|---|---|---|---|---|---|
| 4 | 30 | 80 | 988601 | F204B-80/0,03 [2] | 2CSF204501R1800 | 0,46 | 1 |
| | | 125 | 988700 | F204B-125/0,03L [1, 2] | 2CSF204523R1950 | 0,46 | 1 |
| | 300 | 80 | 989103 | F204B-80/0,3 [2] | 2CSF204501R3800 | 0,46 | 1 |
| | | 125 | 989202 | F204B-125/0,3L [1, 2] | 2CSF204523R3950 | 0,46 | 1 |
| | 300 S | 125 | 989509 | F204BS-125/0,3L [1, 2] | 2CSF204823R3950 | 0,46 | 1 |
| | 500 | 125 | 730439 | F204B-125/0,5L [1, 2] | 2CSF204523R4950 | 0,46 | 1 |
| | 500 S | 125 | 731238 | F204BS-125/0,5L [1, 2] | 2CSF204823R4950 | 0,46 | 1 |

[1] Left-sided neutral pole
[2] No-self-diagnostics

## F200 B Type from 16 to 63 A

Residual current tripping thresholds according to frequency

**F200 B 30 mA**

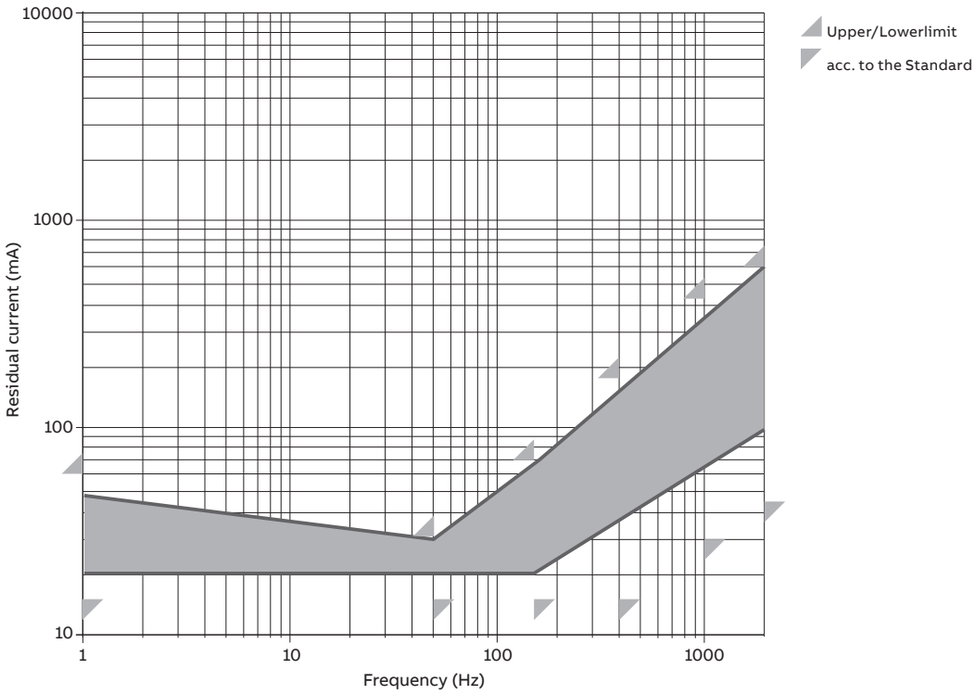


**F200 B 300 mA**

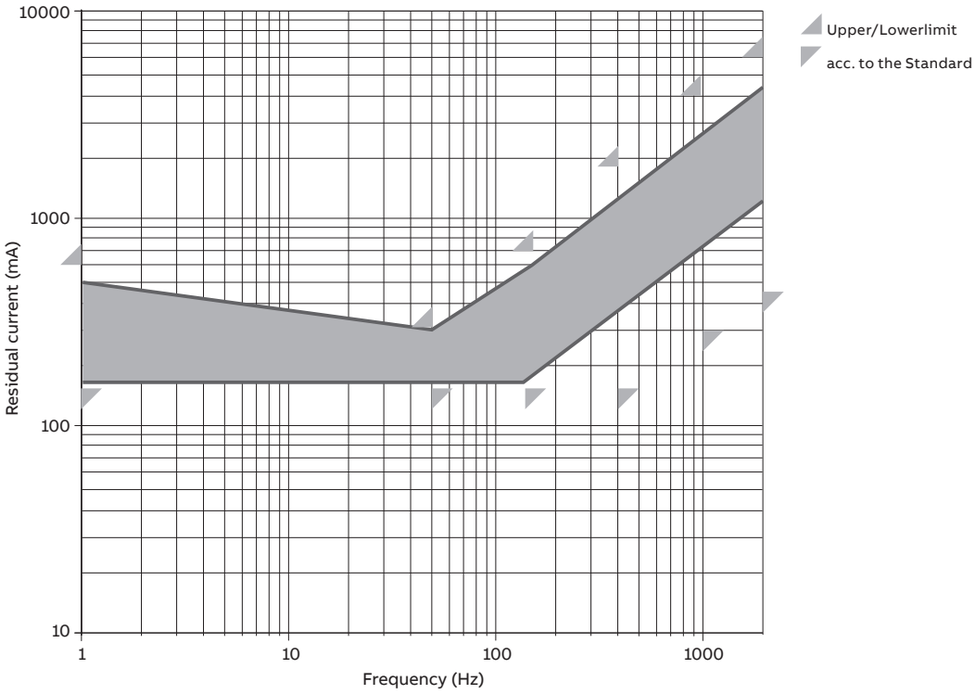

—

**F200 B 500 mA**

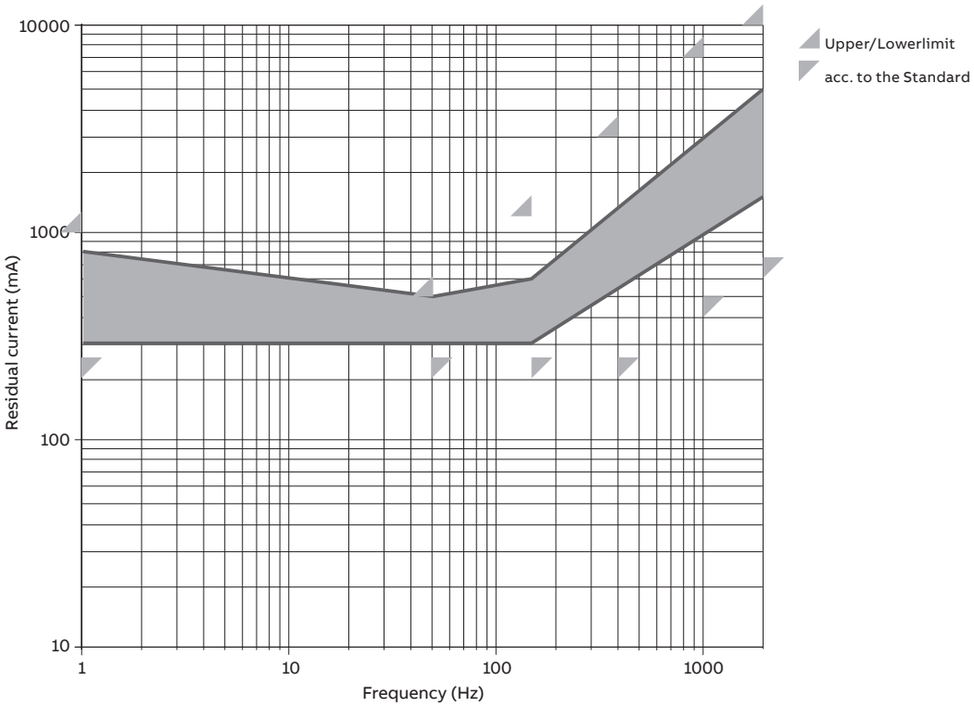
10000
1000
100
10
Residual current (mA)
1
10
100
1000
Frequency (Hz)
Upper/Lowerlimit
acc. to the Standard

## F200 B high ratings

Residual current tripping thresholds according to frequency

**F204 B 30 mA**

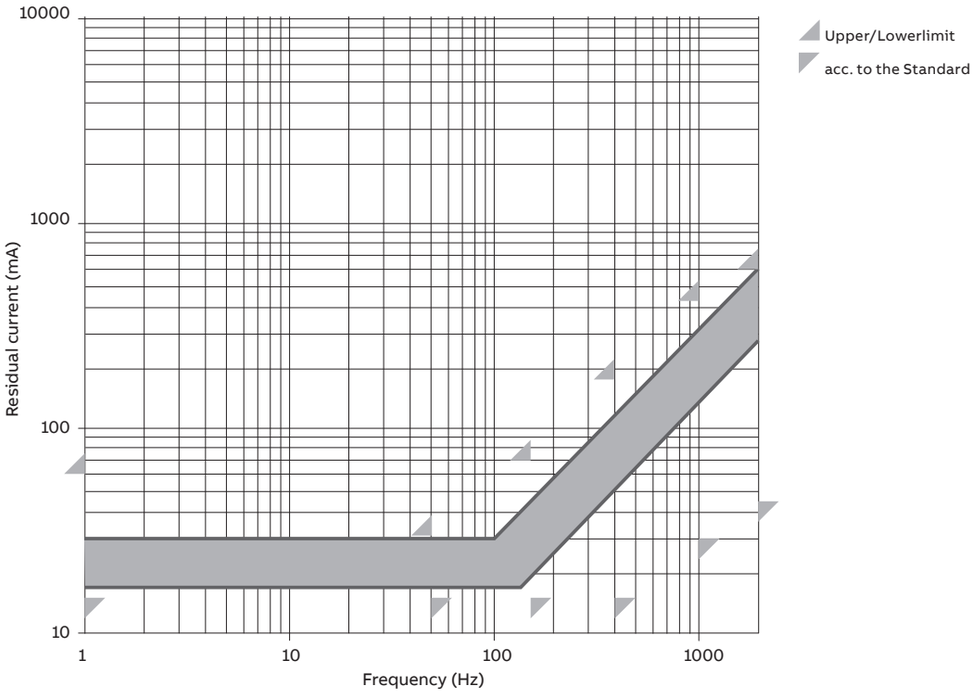


**F204 B 300 mA**

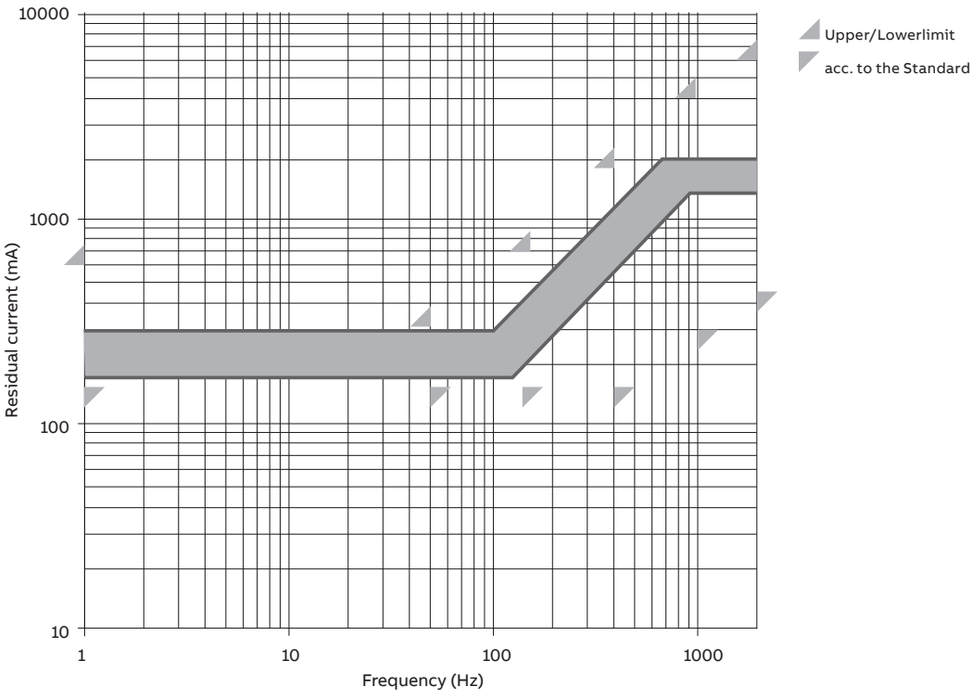

—

**F204 B 500 mA**

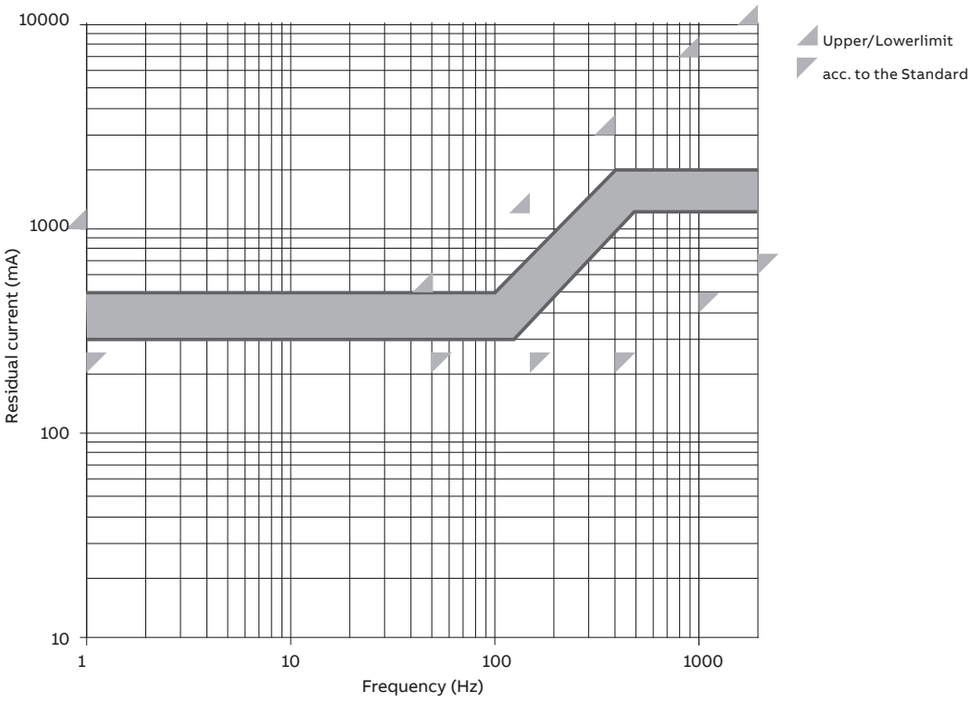
10000
1000
100
10
Residual current (mA)
1
10
100
1000
Frequency (Hz)
Upper/Lowerlimit
acc. to the Standard

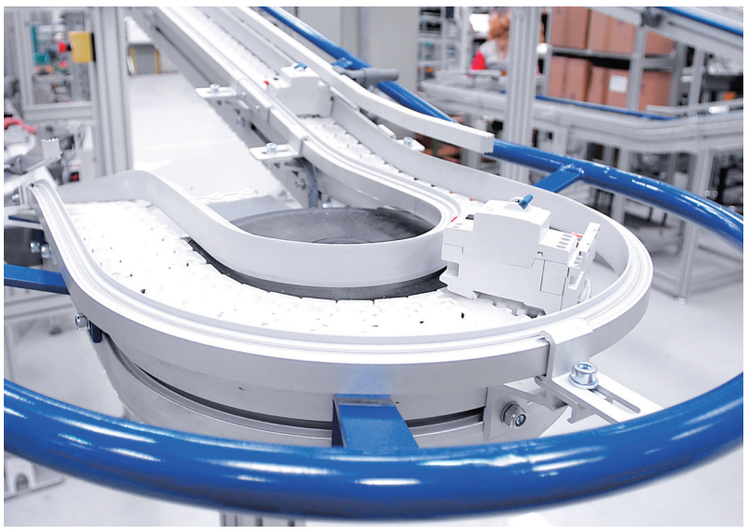

—
02

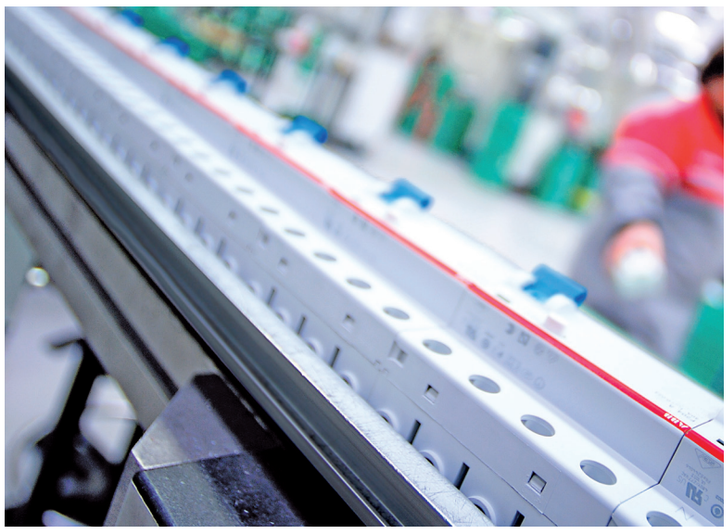

—
03

— —
02 03
Production line of the RCCB F200 Type B

—

## Tripping times

| Tripping times | | | | | |
|---|---|---|---|---|---|
| **Type** | **Fault currents** | **Tripping time at** | | | |
| | Alternating currents | 1 x IΔn | 2 x IΔn | 5 x IΔn | 500 A |
| | Pulsating DC currents | 1,4 x IΔn | 2 x 1,4 x IΔn | 5 x 1,4 x IΔn | 500 A |
| | Smooth DC currents | 2 x IΔn | 2 x 2 x IΔn | 5 x 2 x IΔn | 500 A |
| Standard or short-time delay | | Max. 0,3 s | Max. 0,15 s | Max. 0,04 s | Max. 0,04 s |
| Selectiv S | | 0,13 - 0,5 s | 0,06 - 0,2 s | 0,05 - 0,15 s | 0,04 - 0,15 s |

—

## Power Loss Values

| Power Loss [W] | In [A] | Per Pole | Total |
|---|---|---|---|
| | 16 | 0,26 | 0,82 |
| | 25 | 0,65 | 1,58 |
| | 40 | 1,65 | 3,60 |
| F202 B | 63 | 4,14 | 8,58 |
| | 25 | 0,74 | 3,43 |
| | 40 | 1,92 | 6,95 (9,26*) |
| | 63 | 4,80 | 15,6 (17,9*) |
| | 80 | 3,5 | 14 |
| F204 B | 125 | 7,5 | 34,8 |

* 500 mA devices

—

## Derating in temperature for F200 B series

Max operating current depending on permanent ambient temperature of the residual current circuit breaker.

| In (A) | Temperature (°C) | | | | |
|---|---|---|---|---|---|
| | -25...50 | 55 | 60 | 65 | 70 |
| 16A | 16 | 16 | 16 | 16 | 16 |
| 25A | 25 | 25 | 25 | 25 | 25 |
| 40A | 40 | 40 | 40 | 40 | 32 |
| 63A | 63 | 55 | 48 | 40 | 32 |

# Auxiliary elements and accessories for MCBs and RCDs

Selection tables

## F200 B Type from 16 to 63 A

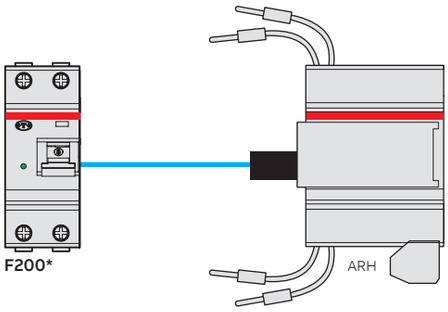


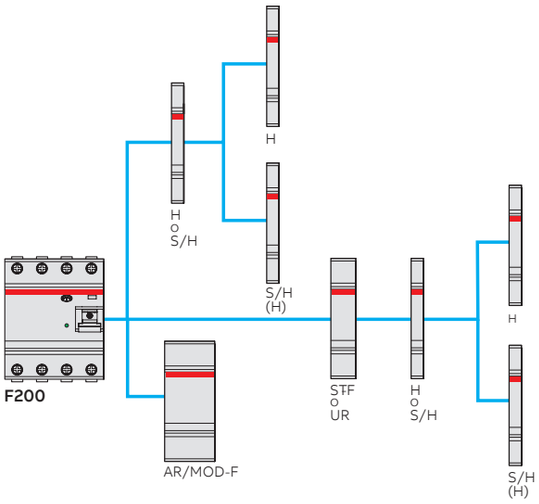


| | | |
|---|---|---|
| **ARH** | Home automatic resetting unit | F2C-ARH |

* F202 30 mA or 100 mA (depending on ARH model), max 63 A

| | | |
|---|---|---|
| **H** | Auxiliary contact | S2C-H6R |
| **H-R** | Auxiliary contact | S2C-H6-...R |
| **S/H** | Signal/Auxiliary contact | S2C-S/H6R |
| **S/H (H)** | Signal/Auxiliary contact used as auxiliary contact | S2C-S/H6R |
| **UR** | Undervoltage release | S2C-UA |
| **AR** | Auto reclosing unit | F2C-ARI |
| **MOD-F** | Motor operating device | F2C-CM |
| **ST-F** | Shunt trip for F 200 RCCB | F2C-A |

## F200 B high ratings

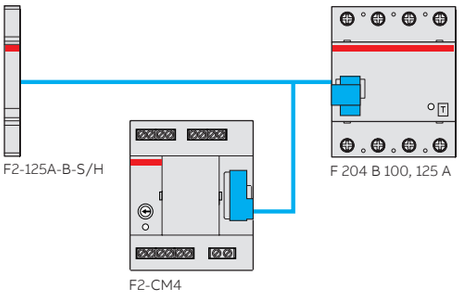


| | |
|---|---|
| **F2-125A-B-S/H** | Signal/Auxiliary contact |
| **F2-CM4-MOD** | |

# Overall dimensions and wiring diagrams

**F200 B Type from 16 to 63 A**
All measurements in mm

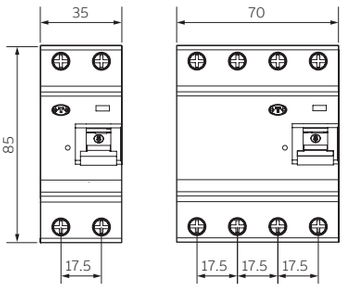


**F200 B high ratings**

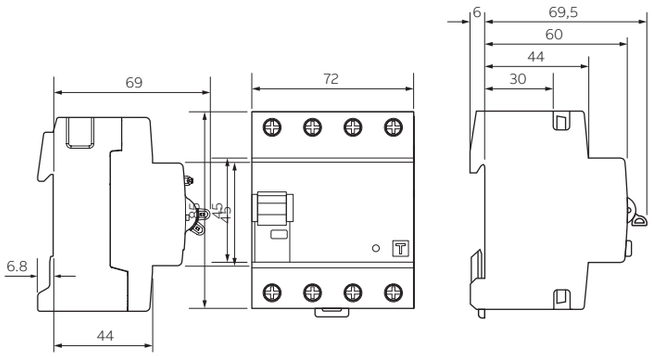


**F202 B16 - 63A**

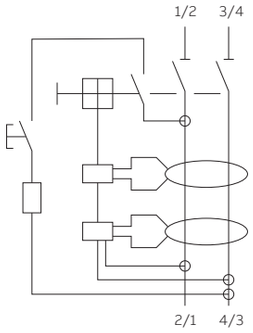


**F204 B25 - 63A**

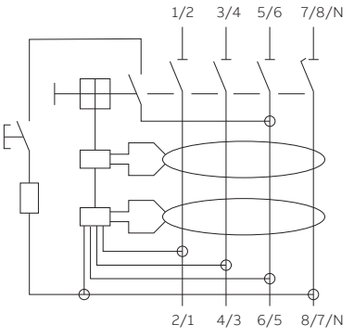


**F204 B 80A**

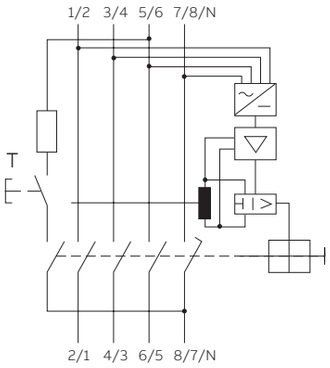


**F204 125A Neutral left**

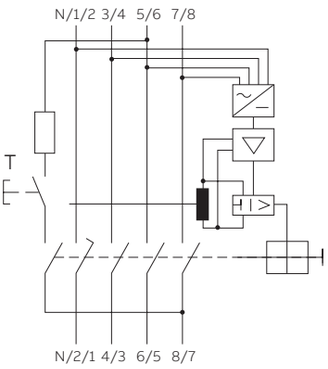


**ABB S.p.A.**
Electrification Products Division
BU Building Products

**www.abb.com/lowvoltage**

We reserve the right to make technical changes or modify the contents of this document without prior notice. With regard to purchase orders, the agreed particulars shall prevail. ABB AG does not accept any responsibility whatsoever for potential errors or possible lack of information in this document.

We reserve all rights in this document and in the subject matter and illustrations contained therein. Any reproduction, disclosure to third parties or utilization of its contents – in whole or in parts – is forbidden without prior written consent of ABB AG.
Copyright© 2020 ABB
All rights reserved

9AKK107991A7569 - 02.2021