POSB06200A-WH series

6V / 2A Wall mounted type AC/DC adaptor

■ Features:

- *Universal AC input / Full range*
- *ErP step II / CEC level VI compliance*
- *No load power consumption P < 0.075W*
- *Protections: Overload / Short circuit / Over Voltage*

CONSTANT VOLTAGE

ELECTRICAL SPECIFICATION

MODEL	POSB 06200A-WH
OUTPUT	
Rated Voltage	6V
Rated Current	2A
Current Range	0 ÷ 2A
Rated Power	12W
Line Regulation	± 1%
Load Regulation	± 5%
Tolerance	± 10%
Ripple & Noise (max.)	$120mV_{P-P}$
Setup, Rise Time	5000ms, 30ms / 230VAC at full load
Hold up Time (typ.)	4ms / 230VAC at full load
INPUT	
Voltage Range	90 ÷ 264VAC
Frequency Range	47 ÷ 63Hz
Efiiciency (typ.)	81.03%
AC Current (typ.)	0.3A / 230VAC
No load Power Consumption (max.)	0.075W
PROTECTIONS	
Overload	Range: 105-200%
	Auto-recovery.
Short Circuit	Type: hiccup mode, auto-recovery.
Over Voltage	Type: auto-recovery.

sales@prom-elec.com / ООО ПРОМЭЛЕКТРОНИКА

POSB06200A-WH series

6V / 2A Wall mounted type AC/DC adaptor

WORKING ENVIRONMENT

Working Temperature	0°C ÷ 45°C
Working Humidity	5 ÷ 90% RH non-condensing
Storage Temperature and Humidity	-20°C ÷ 85°C, 5 ÷ 90% RH non-condensing

SAFETY and EMC REGULATIONS

Safety Standards	Compliance to EN 60950-1
Withstand Voltage	IN/OUT: 3.6kVAC
Isolation Resistance	IN/OUT: 50MΩ/500VDC/25°C/70%
EMC Emission	Compliance to EN55032
EMC Immunity	Compliance to EN61000-4-2, -3, -4, -5
Harmonic Current	Compliance to EN61000-3-3; EN61000-3-2

OTHERS

DC wire and plug	Wire: 22AWG*2C, length = 1200mm	Plug: 5.5x2.1 mm
Net Weight / Dimensions	91g / 67 x 38 x 74mm (L x W x H)	

MECHANICAL SPECIFICATION

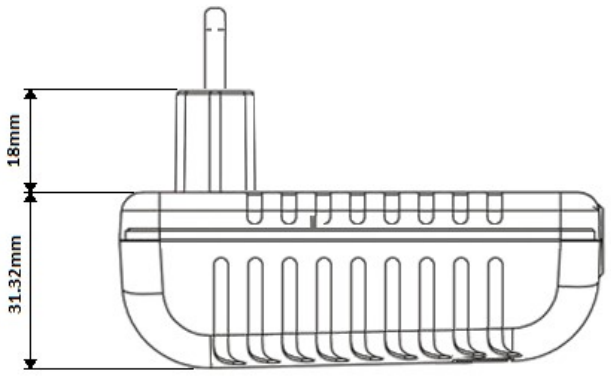

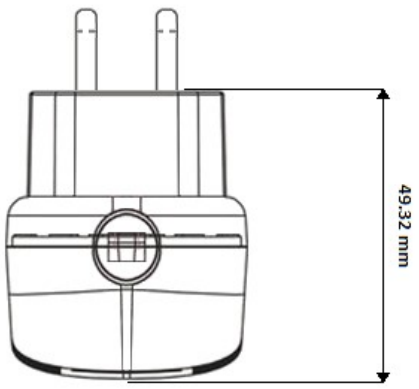

POSB06200A-WH series

6V / 2A Wall mounted type AC/DC adaptor

MECHANICAL SPECIFICATION: DC wire and plug

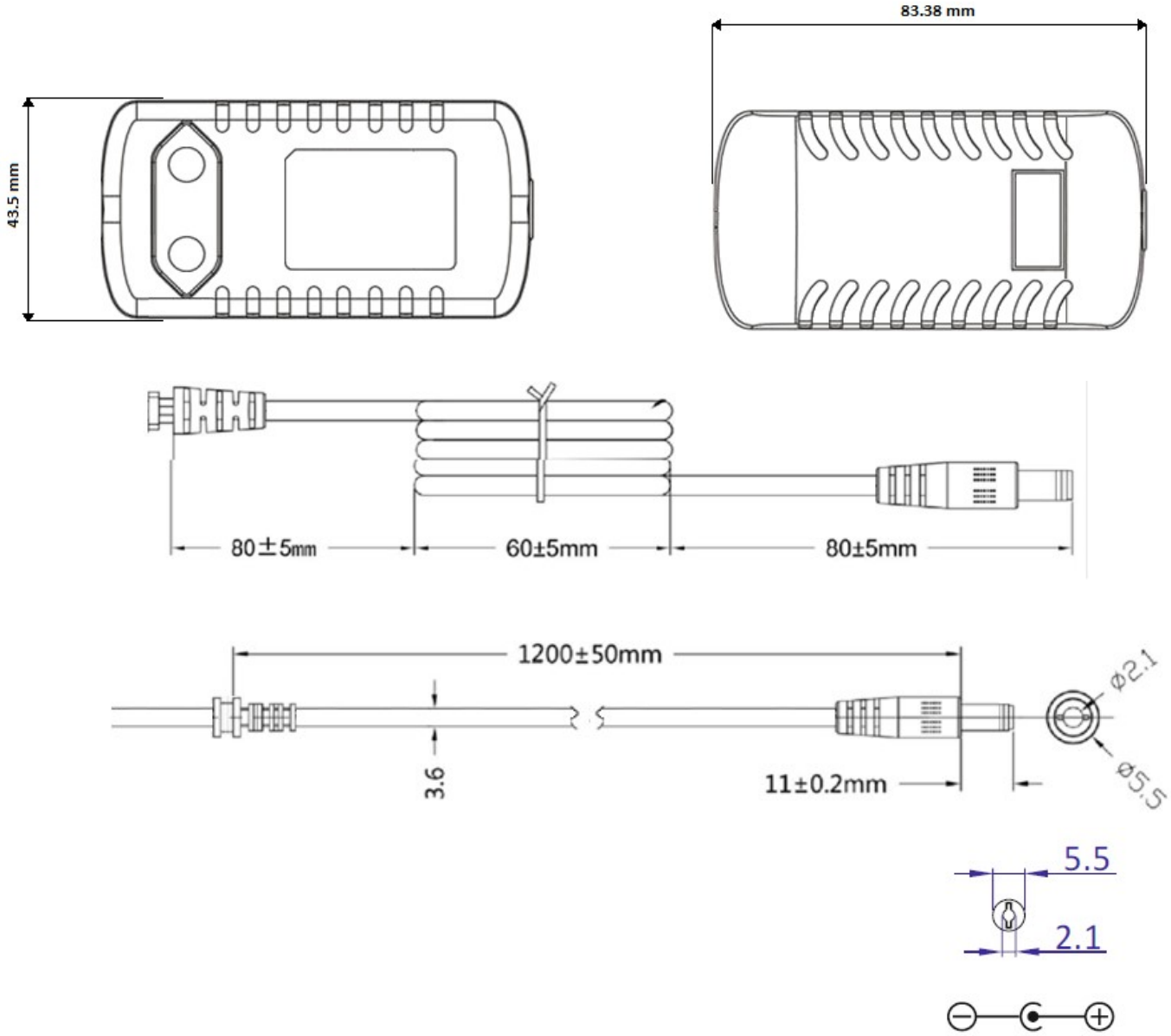

1. All parameters NOT specially mentioned are measured at 230VAC input, rated load and 25°C of ambient temperature.
2. Ripple & noise are measured at 20MHz of bandwidth by using a 12" twisted pair-wire terminated with a 0.1μF i 47μF parallel capacitor.
3. Tolerance includes set up tolerance, line regulation and load regulation.
4. Setup and rise time is measured from 0 to 90% rated output voltage.
5.Power supply is considered as component not indented to apply by end-user. Power supply meets safety and EMC standards however the final equipment with power supply must be re-quality to comply with EMC Directives.