POWERTIP TECH. CORP.

SPECIFICATIONS

CUSTOMER	:	
SAMPLE CODE	:	SH280142T001-ZBR
MASS PRODUCTION CODE	:	PH280142T001-ZBR
SAMPLE VERSION	:	01
SPECIFICATIONS EDITION	:	003
DRAWING NO. (Ver.)	:	LMD-PH280142T001-ZBR (Ver.002)
PACKAGING NO. (Ver.)	:	PKG-PH280142T001-ZBR (Ver.002)

Customer Approved

Date:

Approved	Checked	Designer
廖志豪 Rex Liao	張慶源 Yuan Chang	陳宗淇 Howard Chen

POWERTIP
2025.02.04
TW RD APR

☐ Preliminary specification for design input

■ Specification for sample approval

POWERTIP TECH. CORP.

Headquarters: No.8, 6th Road, Taichung Industrial Park, Taichung, Taiwan
台中市 407 工業區六路 8 號

TEL: 886-4-2355-8168
FAX: 886-4-2355-8166

E-mail: sales@powertip.com.tw
Http://www.powertip.com.tw

sales@prom-elec.com / ООО ПРОМЭЛЕКТРОНИКА

History of Version

Date (mm / dd / yyyy)	Ver.	Edi.	Description	Page	Design by
08/22/2023	01	001	Preliminary.	-	Howard
11/12/2023	01	002	Frist Sample Modify driver IC,from OTA7290N to ST7703I Modify Absolute Maximum Ratings Modify DC Electrical Characteristics Modify Optical Characteristics Modify Block Diagram Modify Timing Characteristics Modify Drawing	- 4 5 6 11 14~17 Appendix	Howard
02/03/2025	01	003	Modify Operating Temperature to -30~80℃	5,10	Howard

Contents

1. SPECIFICATIONS
- 1.1 Features
- 1.2 Mechanical Specifications
- 1.3 Absolute Maximum Ratings
- 1.4 DC Electrical Characteristics
- 1.5 Optical Characteristics
- 1.6 Backlight Characteristics
- 1.7 Touch Panel Characteristics

2. MODULE STRUCTURE
- 2.1 Counter Drawing
- 2.2 Interface Pin Description
- 2.3 Timing Characteristics

3. QUALITY ASSURANCE SYSTEM
- 3.1 Quality Assurance Flow Chart
- 3.2 Inspection Specification

4. RELIABILITY TEST
- 4.1 Reliability Test Condition

5. PRECAUTION RELATING PRODUCT HANDLING
- 5.1 Safety
- 5.2 Handling
- 5.3 Storage
- 5.4 Terms of Warranty

Appendix:
- 1.LCM Drawing
- 2.LCM Packaging Specifications

1. SPECIFICATIONS

1.1 Features

Item	Standard Value
Display Type	280 * 3 (RGB) * 1424 Dots
LCD Type	Full Viewing Angle , Normally Black , Transmissive type
Screen size(inch)	7.0 inch
Color configuration	RGB-Strip
Backlight Type	LED B/L
Weight	77.5g
Interface	4-Lanes MIPI Interface
Other(controller/driver IC)	Sitronix—ST7703I (Or Compatible IC)
ROHS	THIS PRODUCT CONFORMS THE ROHS OF PTC Detail information please refer website : http://www.powertip.com.tw/news_detail.php?Key=1&cID=1

1.2 Mechanical Specifications

Item	Standard Value	Unit
Outline Dimension	43.3(W) * 201.0(L) * 5.17(H)	mm

LCD panel

Item	Standard Value	Unit
Active Area	33.6(W) * 170.88 (L)	mm
Pixel Size	0.12(W) * 0.12(H)	mm

Note: For detailed information please refer to LCM drawing

1.3 Absolute Maximum Ratings

Module

Item	Symbol	Condition	Min.	Max.	Unit	Remark
Power Supply for TFT Panel	VCC	GND=0V	-0.3	6.6	V	-
Operating Temperature	T_{OP}	Note 1	-30	+80	°C	
Storage Temperature	T_{ST}	Note 2	-30	+80	°C	

The absolute maximum rating values of this product are not allowed to be exceeded at any time. Should a module be used with any of the absolute maximum ratings exceeded, the characteristics of the module may not be recovered, or in an extreme case, the module may be permanently destroyed.

Note 1: Ts is the temperature of panel's surface

Note 2: Ta is the ambient temperature of samples

1.4 DC Electrical Characteristics

Module GND = 0V, Ta = 25°C

Item	Symbol	Condition	Min.	Typ.	Max.	Unit
Power Supply	VCC	GND=0V	2.5	2.8	3.3	V
Input Voltage	V_{IH}	GND=0V	0.7VCC	-	VCC	V
	V_{IL}	GND=0V	GND	-	0.3VCC	
Output H/L Level Voltage	VOH	GND=0V	0.8VCC	-	VCC	V
	VOL	GND=0V	GND	-	0.2VCC	V
Supply Current	ICC	VCC= 2.8 V Pattern=PHOTO	-	60	90	mA

1.5 Optical Characteristics

TFT LCD Module VCC= 2.8 V, Ta=25°C

Item	Symbol		Condition	Min.	Typ.	Max.	unit	
Response time	Tr+Tf		Ta = 25°C θX, θY = 0°	-	-	35	ms	Note 2
Viewing angle	Top	θY+	CR ≥ 10	80	85	-	Deg.	Note 4
	Bottom	θY-		80	85	-		
	Left	θX-		80	85	-		
	Right	θX+		80	85	-		
Contrast ratio	CR		Ta = 25°C θX , θY = 0°	500	600	-	-	Note 3
Color of CIE Coordinate（With B/L & T/P）	White	X		0.24	0.29	0.34	-	Note1
		Y		0.30	0.35	0.40		
	Red	X		0.57	0.62	0.67		
		Y		0.30	0.35	0.40		
	Green	X		0.25	0.30	0.35		
		Y		0.59	0.64	0.69		
	Blue	X		0.07	0.12	0.17		
		Y		0.05	0.10	0.15		
Average Brightness Pattern=white display (With B/L & T/P)*1	IV		IF= 80mA	350	400	-	cd/m2	Note1
Uniformity (With B/L & T/P)*2	△ B		IF=80mA	70	-	-	%	Note1

Note 1:

*1: △B=B(min) / B(max) * 100%

*2: Measurement Condition for Optical Characteristics:

a: Environment: 25℃±5℃ / 60±20%R.H, no wind, dark room below 10 Lux at typical lamp current and typical operating frequency

b: Measurement Distance: 500 ± 50 ㎜, (θ= 0°)

c: Equipment: TOPCON BM-7 fast, (field 1˚), after 10 minutes operation

d: The uncertainty of the C.I.E coordinate measurement ±0.01, Average Brightness ± 4%

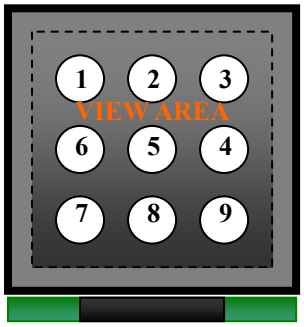

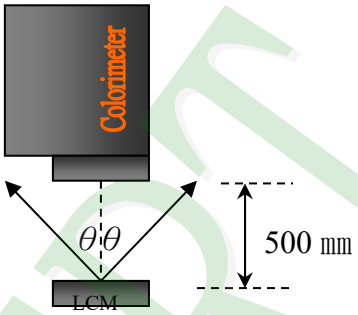

Colorimeter=BM-7 fast

To be measured at the center area of panel with a viewing cone of 1° by Topcon luminance meter BM-7, after 10 minutes operation (module)

Note 2: Definition of response time:

The output signals of photo detector are measured when the input signals are changed from “black” to “white” (falling time) and from “white” to “black” (rising time), respectively. The response time is defined as the time interval between the 10% and 90% of Amplitudes.

Refer to figure as below:

Normally White

Normally Black

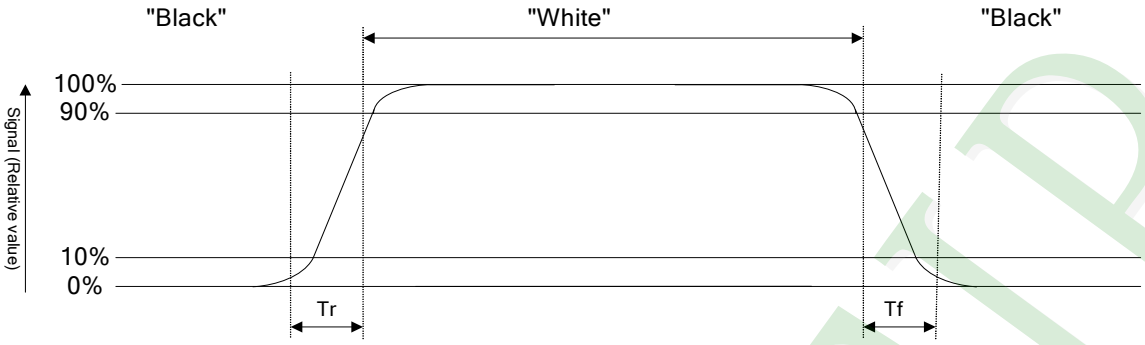

Note 3: Definition of contrast ratio:

Contrast ratio is calculated with the following formula

$$\text{Contrast ratio (CR)} = \frac{\text{Photo detector output when LCD is at “White” state}}{\text{Photo detector output when LCD is at “Black” state}}$$

Note 4: Definition of viewing angle:

Refer to figure as below:

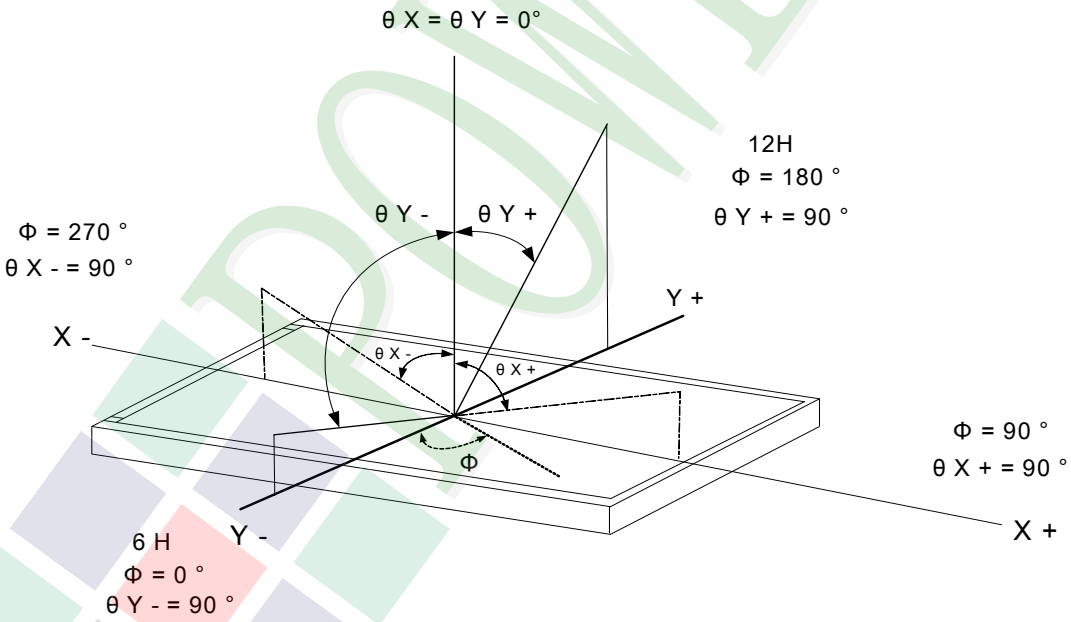

1.6 Backlight Characteristics

Maximum Ratings

Item	Symbol	Conditions	Min.	Max.	Unit
LED Forward Current	IF	Ta =25℃	-	-	mA
LED Reverse Current	IR	Ta =25℃	-	50	uA
Power Dissipation	PD	Ta =25℃	-	1024	mW

Electrical / Optical Characteristics

Item	Symbol	Conditions	Min.	Typ.	Max.	Unit
Forward Voltage	VF	IF=80mA	10.8	11.8	12.8	V
Uniformity *1	△B		75		-	*2
Color	White					

*1：This value will be changed while mass production.

*2：△B=B(min) / B(max)%

B/L Internal Circuit Diagram

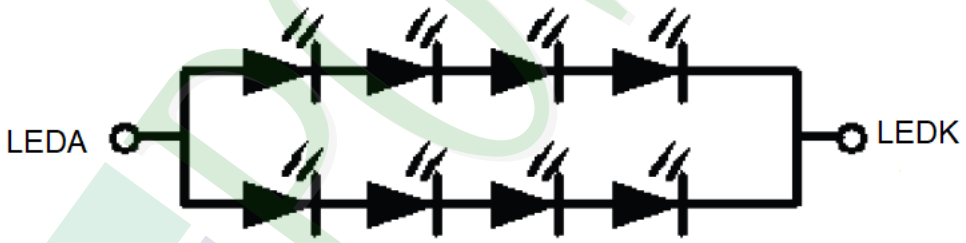

Other Description

Item	Conditions	Description
Life Time	Ta =25℃ IF=80mA	20000 hrs

1.7 Touch Panel Characteristics

Features

Item	Standard Value
Touch Panel Size	7”
Touch type	Projective capacitive touch panel
Input Method	True Multi-touch with up to 5 Points of Absolution X and Y Coordinates
Output Interface	I^2C
IC	FocalTech--FT5426

I^2C Address

Bit 7	Bit 6	Bit 5	Bit 4	Bit 3	Bit 2	Bit 1	Bit 0
0	1	1	1	0	0	0	**R/W**

Bit 0: 0 for Write / 1 for Read

Mechanical Specifications

Item	Standard Value	Unit
Viewing Area	Refer to drawing	mm

Absolute Maximum Ratings

Item	Symbol	Condition	Min.	Max.	Unit
Supply voltage	VDD	-	2.7	3.6	V
Operating Temperature	T_{OP}	Non condenssing	-30	80	°C
Storage Temperature	T_{ST}	Non condenssing	-30	80	°C

DC Electrical Characteristics

Item	Symbol	Condition	Min.	Typ.	Max.	Unit
Supply voltage	VDD	-	-	3.3	-	V

Optical Characteristics

Item	Standard Value	Unit
Total light transmittance	85% or more	-
Hardness	≥6H	-

2. Module Structure

2.1 Counter Drawing

2.1.1 LCM Mechanical Diagram

* See Appendix

2.1.2 Block Diagram

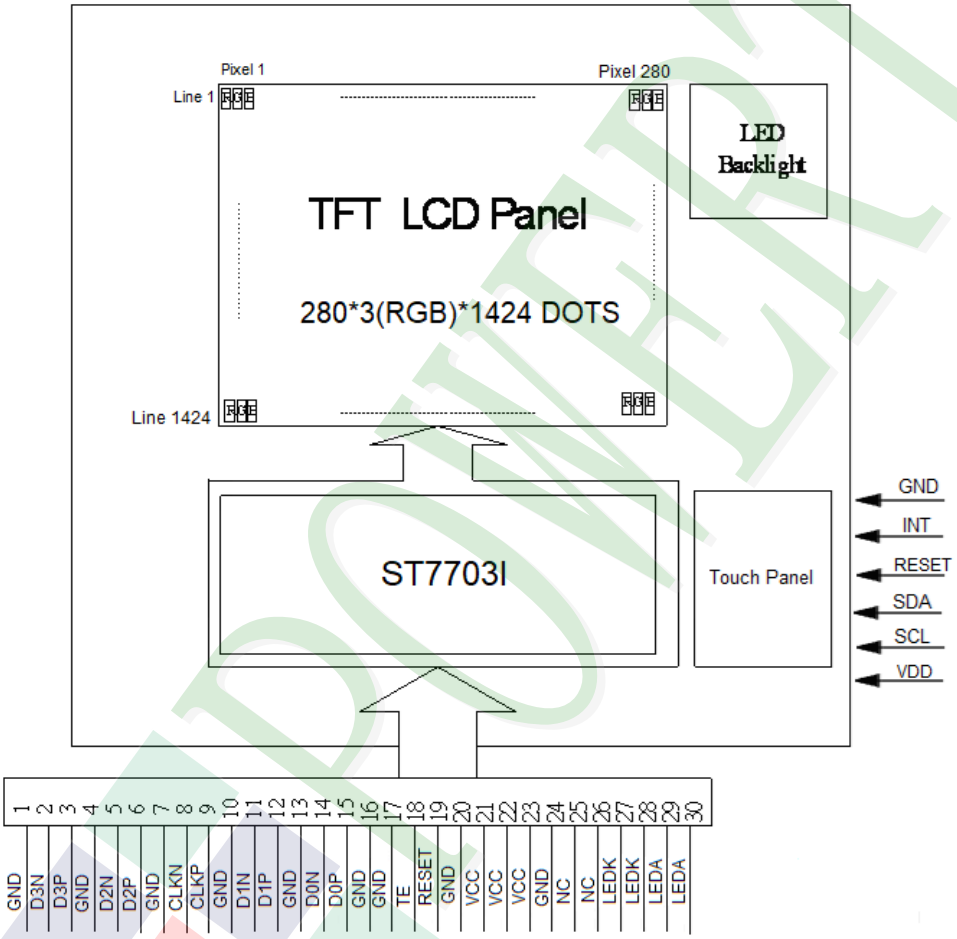

2.2 Interface Pin Description

TFT LCM Interface CON1

Pin#	Name	Description
1	GND	Ground
2	D3N	Negative polarity of low voltage differential data signal
3	D3P	Positive polarity of low voltage differential data signal
4	GND	Ground
5	D2N	Negative polarity of low voltage differential data signal
6	D2P	Positive polarity of low voltage differential data signal
7	GND	Ground
8	CLKN	Negative polarity of low voltage differential clock signal
9	CLKP	Positive polarity of low voltage differential clock signal
10	GND	Ground
11	D1N	Negative polarity of low voltage differential data signal
12	D1P	Positive polarity of low voltage differential data signal
13	GND	Ground
14	D0N	Negative polarity of low voltage differential data signal
15	D0P	Positive polarity of low voltage differential data signal
16	GND	Ground
17	GND	Ground
18	TE	Tearing effect output pin to synchronize to frame writing. If not used, open this pin
19	RESET	Reset signal pin
20	GND	Ground
21	VCC	Power supply
22	VCC	Power supply
23	VCC	Power supply
24	GND	Ground
25	NC	Not connect
26	NC	Not connect
27	VLED-	LED cathode
28	VLED-	LED cathode
29	VLED+	LED anode
30	VLED+	LED anode

Capacitive Touch Panel (CTP) Interface CON2

Pin No.	Symbol	Function
1	GND	Touch Panel Ground.
2	INT	The interrupt the CTP to the Host
3	RESET	RESET Low
4	SDA	I2C Data
5	SCL	I2C Clock
6	VDD	Power Supply Voltage (3.3V)

2.3 Timing Characteristics

2.3.1 Low Power Mode

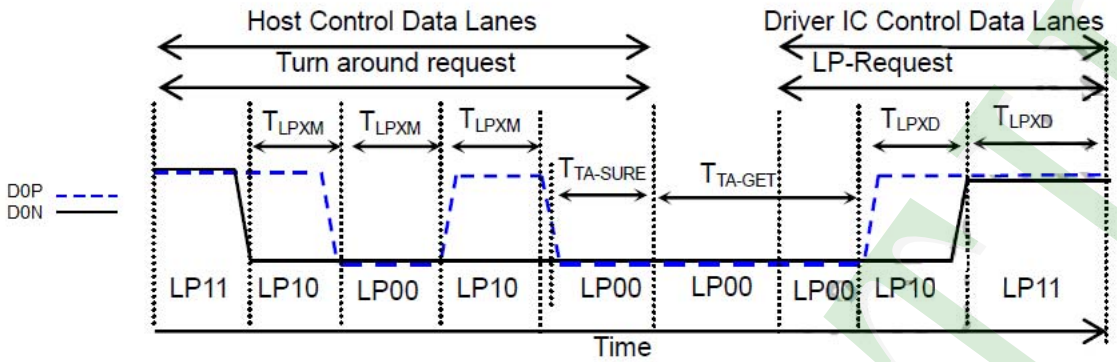

BTA from HOST to Display Module Timing

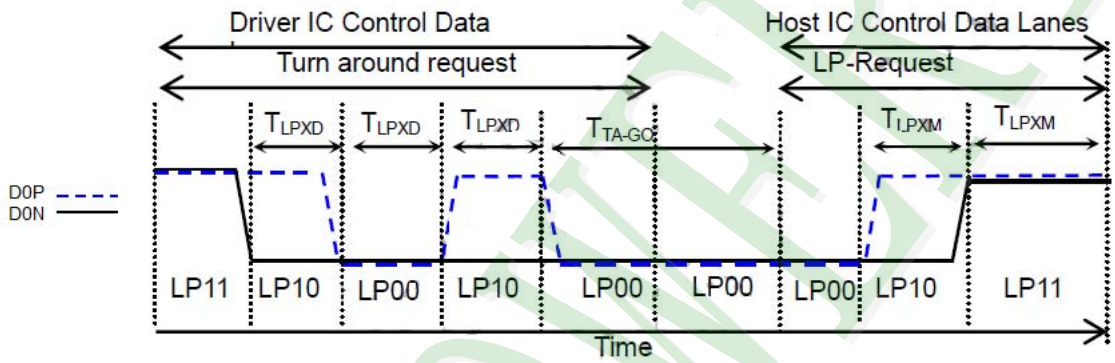

Signal	Item	Symbol	Spec			Unit
			Min.	Typ.	Max.	
D0P/ D0N	Length of LP-00/LP01/LP10/ LP11 Host→Display module	T_{LPXM}	50	-	-	ns
	Length of LP-00/LP01/LP10/ LP11Display module→Host	T_{LPXD}	50	-	-	ns
	Time-out before the MPU start driver	$T_{TA-SURE}$	T_{LPXD}	-	2xTLPXD	ns
	Time to drive LP-00 by display module	T_{TA-GET}	$5xT_{LPXD}$	-	-	ns
	Time to drive LP-00 after turnaround request Host	T_{TAGO}	$4xT_{LPXD}$	-	-	ns

2.3.2 High Speed Mode

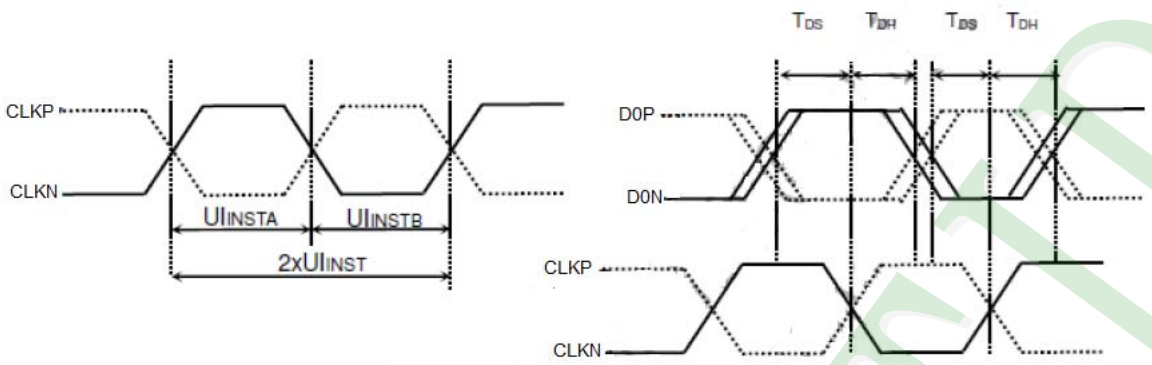

DSI clock timing Characteristics

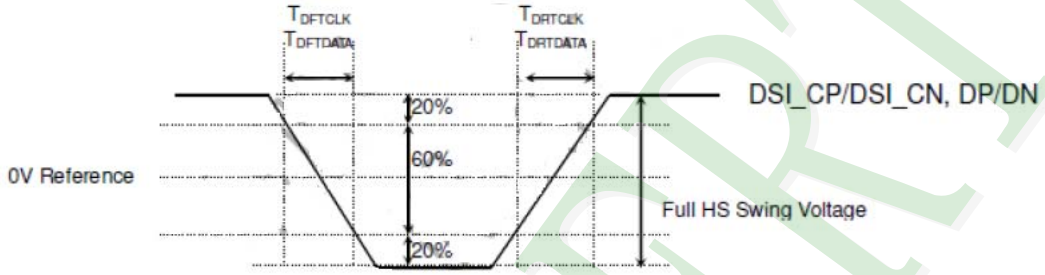

Signal	Item	Symbol	Spec			Unit
			Min.	Typ.	Max.	
CLKP / CLKN	Double UI instantaneous	2xUINST	TBD	-	25	ns
	UI instantaneous	UINSTA UINSTB	TBD	-	12.5	ns
D0P/ D0N	Data to clock setup time	TDS	0.15xUI	-	-	ps
	Data to clock hold time	TDH	0.15xUI	-	-	ps
CLKP / CLKN	Differential rise time for clock	TDRTCLK	150	-	0.3UI	ps
	Differential fall time for clock	TDFTCLK	150	-	0.3UI	ps
DXP/ DXN	Differential rise time for data	TDRTDATA	150	-	0.3UI	ps
	Differential fall time for data	TDFTDATA	150	-	0.3UI	ps

2.3.3 DSI BURSTS Mode

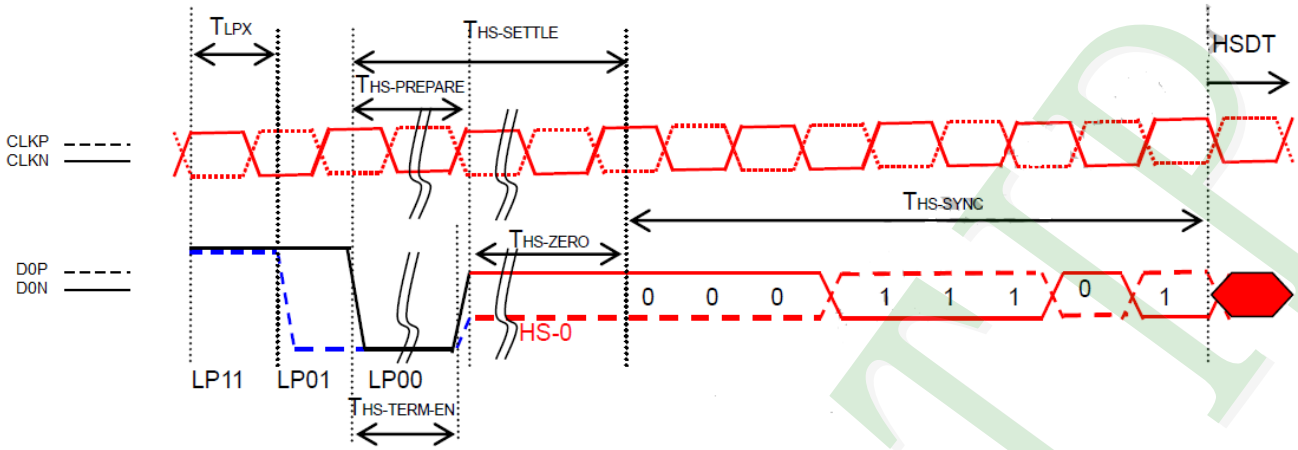

Signal	Item	Symbol	Spec			Unit
			Min.	Typ.	Max.	
D0P/ D0N	Length of LP-00/LP01/LP10/ LP11	T_{LPX}	50	-	-	ns
	Time to Driver LP-00 toprepare for HS transmission	$T_{HS-PREPARE}$	40+4UI	-	85+6UI	ns
	Time to enable data receiver line termination	$T_{HS-TERM-EN}$	-	-	35+4xUI	ns
	Time to drive LP-00 by display module	T_{TA-GET}	5xT_{LPXD}	-	-	ns
	Time to drive LP-00 after turnaround request Host	T_{TAGO}	4xT_{LPXD}	-	-	ns

2.3.4 Reset timing

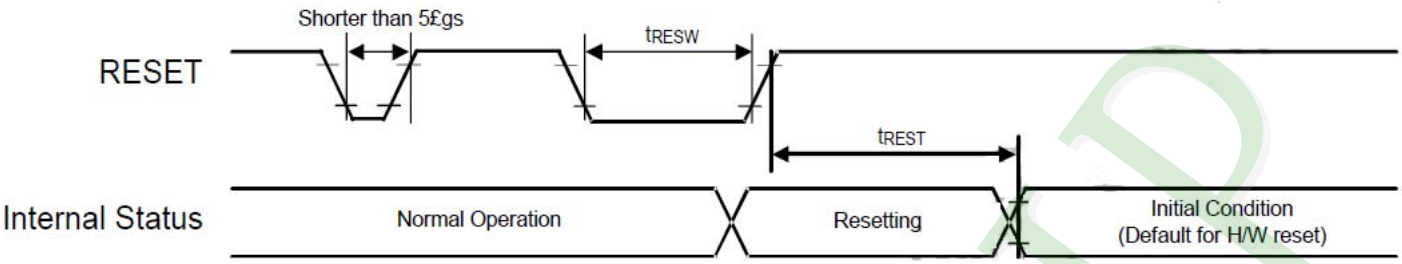

Signal	Symbol	Parameter	Min.	Max.	Unit
RESET	tRESW	Reset low pulse width(1)	10	-	us
	tREST	Reset complete time(2)	15		ms
			120		ms

Note: (1) Spike due to an electrostatic discharge on NRESET line does not cause irregular system reset according to the following table.

NRESET Pulse	Action
Shorter than 5 μs	Reset Rejected
Longer than 10 μs	Reset
Between 5 μs and 10 μs	Reset Start

(2) During the resetting period, the display will be blanked (The display is entering blanking sequence, which Maximum time is 120 ms, when Reset Starts in Sleep Out –mode. The display remains the blank state in Sleep In –mode) and then return to Default condition for H/W reset.

(3) During Reset Complete Time, ID and VCOM value in OTP will be latched to internal register during this period. This loading is done every time when there is H/W reset complete time (tREST) within 15ms after a rising edge of NRESET.

(4) Spike Rejection also applies during a valid reset pulse as shown as below:

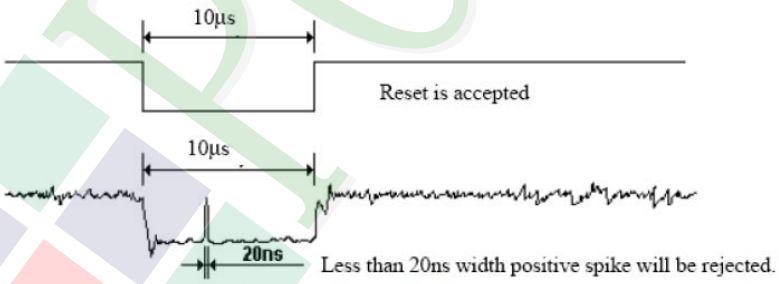

(5) It is necessary to wait 15msec after releasing NRESET before sending commands. Also Sleep Out command cannot be sent for 120msec.

3. Quality Assurance System

3.1 Quality Assurance Flow Chart

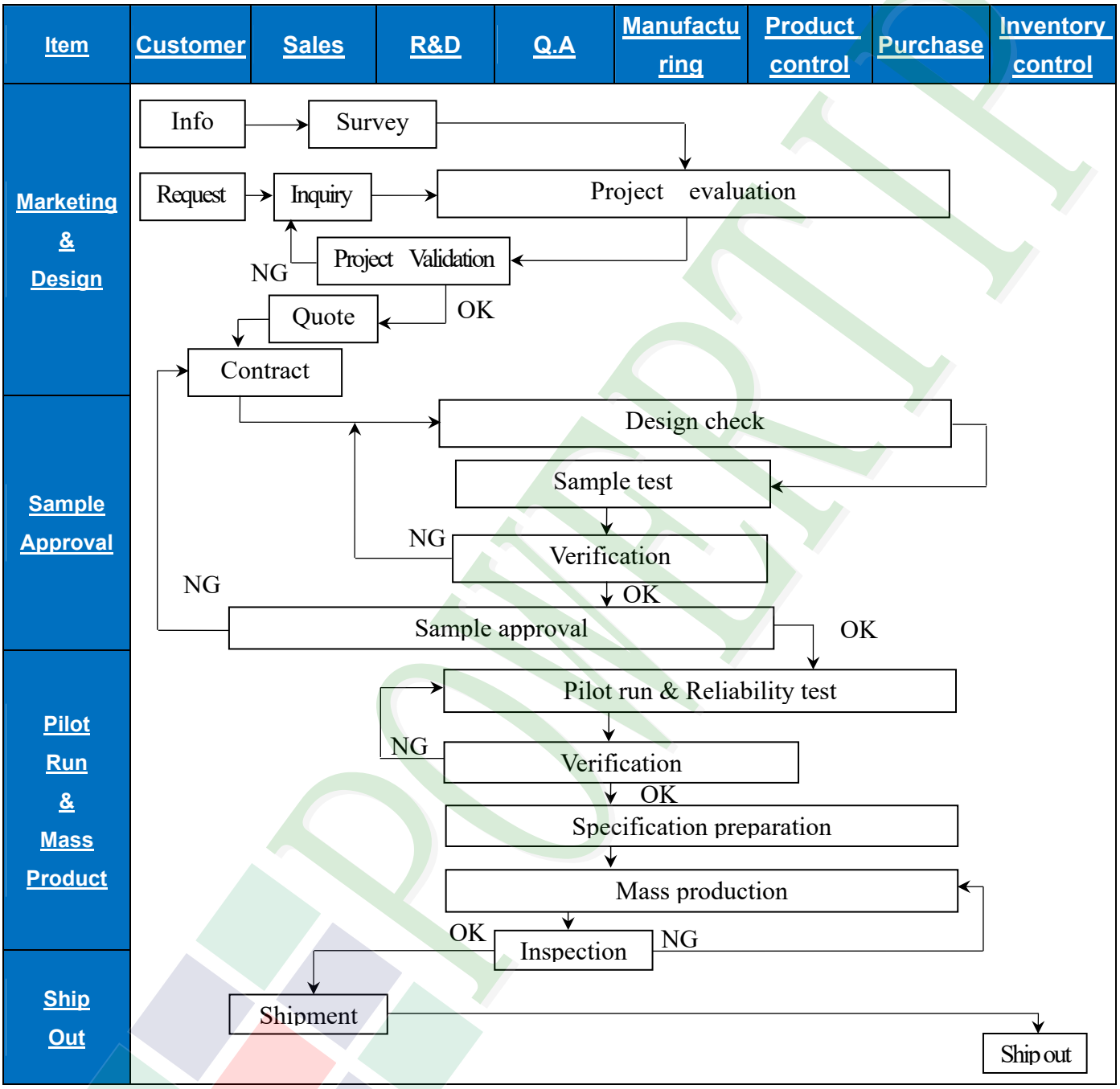

Item	Customer	Sales	R&D	Q.A	Manufacturing	Product control	Purchase	Inventory control
Sales Service	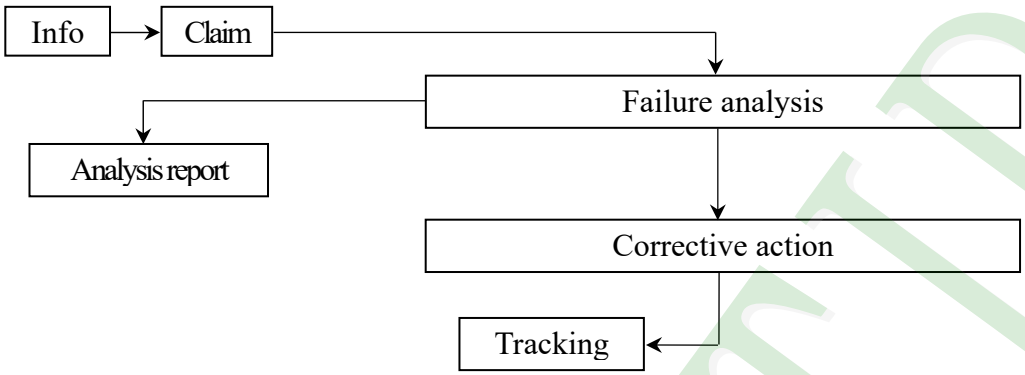							
Q.A Activity	1. ISO 9001 Maintenance Activities 2. Process improvement proposal 3. Equipment calibration 4. Education And Training Activities 5. Standardization Management							

3.2 Inspection Specification

◆Scope: The document shall be applied to TFT-LCD Module for 3.5”-15″ (Ver.B01).

◆Inspection Standard: MIL-STD-105E Table Normal Inspection Single Sampling Level Ⅱ.

◆Equipment: Gauge, MIL-STD, Powertip Tester, Sample

◆Defect Level: Major Defect AQL: 0.4; Minor Defect AQL: 1.5

◆OUT Going Defect Level: Sampling

◆Standard of the product appearance test:

a. Manner of appearance test:

(1). The test best be under 20W×2 fluorescent light(about 300lux ～500lux) and distance of view must be at 30~40 cm.

(2). The test direction is base on about around 45˚ of vertical line.

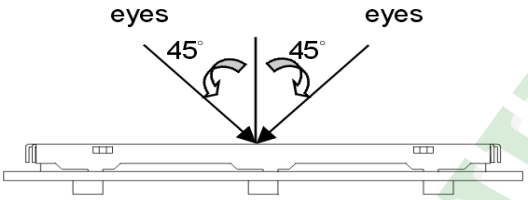

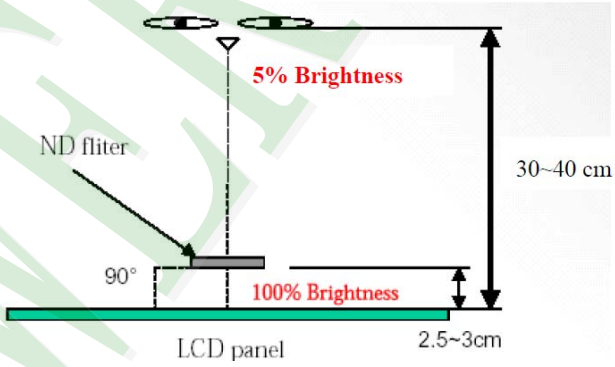

(3). Definition of area.

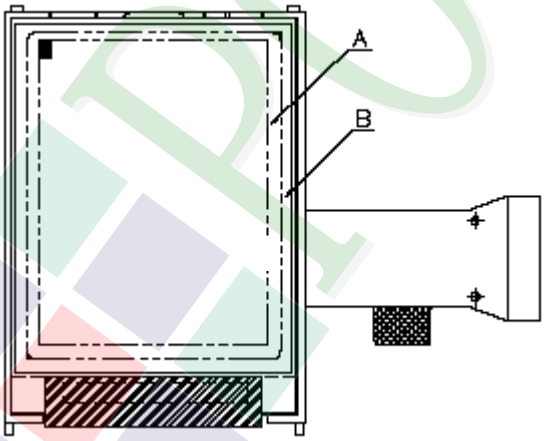

A area: viewing area

B area: Outside of viewing area

(4). Standard of inspection： (Unit：mm)

◆**Specification For TFT-LCD Module 3.5”~15”:** **(Ver.B01)**

<table>
<tr><th>NO</th><th>Item</th><th>Criterion</th><th>Level</th></tr>
<tr><td rowspan="3">01</td><td rowspan="3">Product condition</td><td>1.1 The part number is inconsistent with work order of production.</td><td>Major</td></tr>
<tr><td>1.2 Mixed product types.</td><td>Major</td></tr>
<tr><td>1.3 Assembled in inverse direction.</td><td>Major</td></tr>
<tr><td>02</td><td>Quantity</td><td>2.1 The quantity is inconsistent with work order of production.</td><td>Major</td></tr>
<tr><td>03</td><td>Outline dimension</td><td>3.1 Product dimension and structure must conform to structure diagram.</td><td>Major</td></tr>
<tr><td rowspan="6">04</td><td rowspan="6">Electrical Testing</td><td>4.1 Missing line character and icon.</td><td>Major</td></tr>
<tr><td>4.2 No function or no display.</td><td>Major</td></tr>
<tr><td>4.3 Display malfunction.</td><td>Major</td></tr>
<tr><td>4.4 LCD viewing angle defect.</td><td>Major</td></tr>
<tr><td>4.5 Current consumption exceeds product specifications.</td><td>Major</td></tr>
<tr><td>4.6 Mura cannot be seen through 5% ND filter at 50% Gray, should be judged by the viewing angle of 90 degree.</td><td>Minor</td></tr>
<tr><td>05</td><td>Dot defect

(Bright dot, Dark dot)

On -display</td><td>
<table>
<tr><th colspan="2">Item</th><th>Acceptance (Q’ty)</th></tr>
<tr><td rowspan="4">Dot Defect</td><td>Bright Dot</td><td>≦ 4</td></tr>
<tr><td>Dark Dot</td><td>≦ 5</td></tr>
<tr><td>Joint Dot</td><td>≦ 3</td></tr>
<tr><td>Total</td><td>≦ 7</td></tr>
</table>
5.1 Inspection pattern: full white, full black, Red, Green and blue screens.
5.2 It is defined as dot defect if defect area ＞1/2 dot.
5.3 The distance between two dot defect ≧5 mm.
5.4 Bright dot that can not be seen through 5% ND filter.
</td><td>Minor</td></tr>
</table>

◆**Specification For TFT-LCD Module 3.5″ ~15″ :** **(Ver.B01)**

<table>
<tr><th>NO</th><th>Item</th><th>Criterion</th><th>Level</th></tr>
<tr><td>06</td><td>Black or white Dot, scratch, contamination

Round type
 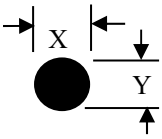

Φ= (x+y) / 2

Line type
 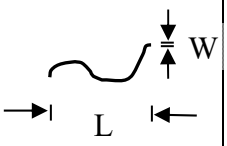
</td><td>6.1 Round type (Non-display or display):
<table>
<tr><th>Dimension (diameter: Φ)</th><th colspan="2">Acceptance (Q’ty)</th></tr>
<tr><th></th><th>A area</th><th>B area</th></tr>
<tr><td>Φ ≦ 0.25</td><td>Ignore</td><td rowspan="4">Ignore</td></tr>
<tr><td>0.25 ＜ Φ ≦ 0.50</td><td>5</td></tr>
<tr><td>Φ ＞ 0.50</td><td>0</td></tr>
<tr><td>Total</td><td>5</td></tr>
</table>
6.2 Line type(Non-display or display):
<table>
<tr><th>module size</th><th>Length (L)</th><th>Width (W)</th><th colspan="2">Acceptance (Q’ty)</th></tr>
<tr><th></th><th></th><th></th><th>A area</th><th>B area</th></tr>
<tr><td rowspan="5">3.5” to less 9”</td><td>---</td><td>W ≦ 0.03</td><td>Ignore</td><td rowspan="5">Ignore</td></tr>
<tr><td>L ≦10.0</td><td>0.03 ＜W ≦ 0.05</td><td>4</td></tr>
<tr><td>L ≦5.0</td><td>0.05 ＜W ≦ 0.10</td><td>2</td></tr>
<tr><td>---</td><td>W ＞0.10</td><td>As round type</td></tr>
<tr><td colspan="2">Total</td><td>5</td></tr>
<tr><td rowspan="4">9” to 15”</td><td>---</td><td>W ≦ 0.05</td><td>Ignore</td><td rowspan="4">Ignore</td></tr>
<tr><td>L ≦10.0</td><td>0.05 ＜W ≦ 0.10</td><td>5</td></tr>
<tr><td>---</td><td>W ＞0.10</td><td>As round type</td></tr>
<tr><td colspan="2">Total</td><td>5</td></tr>
</table></td><td>Minor</td></tr>
<tr><td>07</td><td>Polarizer Bubble</td><td>
<table>
<tr><th>Dimension (diameter: Φ)</th><th colspan="2">Acceptance (Q’ty)</th></tr>
<tr><th></th><th>A area</th><th>B area</th></tr>
<tr><td>Φ ≦ 0.25</td><td>Ignore</td><td rowspan="5">Ignore</td></tr>
<tr><td>0.25 ＜ Φ ≦ 0.50</td><td>4</td></tr>
<tr><td>0.50 ＜ Φ ≦ 0.80</td><td>1</td></tr>
<tr><td>Φ ＞0.80</td><td>0</td></tr>
<tr><td>Total</td><td>5</td></tr>
</table></td><td>Minor</td></tr>
</table>

◆Specification For TFT-LCD Module 3.5″ ~15″ : (Ver.B01)

NO	Item	Criterion	Level
08	The crack of glass	Symbols： X: The length of crack　Y: The width of crack. Z: The thickness of crack　W: terminal length T: The thickness of glass　a : LCD side length 8.1 General glass chip: 8.1.1 Chip on panel surface and crack between panels: 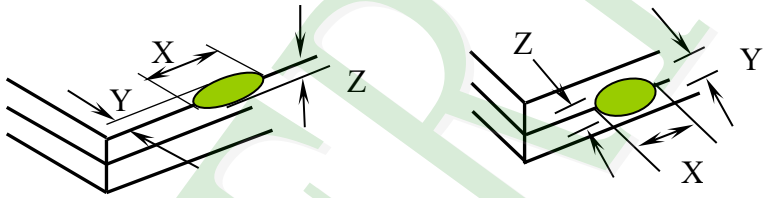 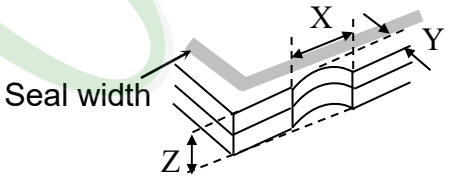 X: ≦ a; Y: Crack can't enter viewing area; Z: ≦1/2 t X: ≦ a; Y: Crack can't exceed the half of SP width.; Z: 1/2 t ＜ Z ≦2 t	Minor

◆Specification For TFT-LCD Module 3.5″ ~15″ : (Ver.B01)

NO	Item	Criterion	Level
08	The crack of glass	Symbols： X: The length of crack　Y: The width of crack. Z: The thickness of crack　W: terminal length t: The thickness of glass　a: LCD side length 8.1.2 Corner crack:	Minor

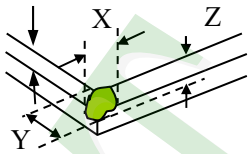

X	Y	Z
≦1/5 a	Crack can't enter viewing area	Z ≦ 1/2 t
≦1/5 a	Crack can't exceed the half of SP width.	1/2 t < Z ≦ 2 t

8.2 Protrusion over terminal:

8.2.1 Chip on electrode pad:

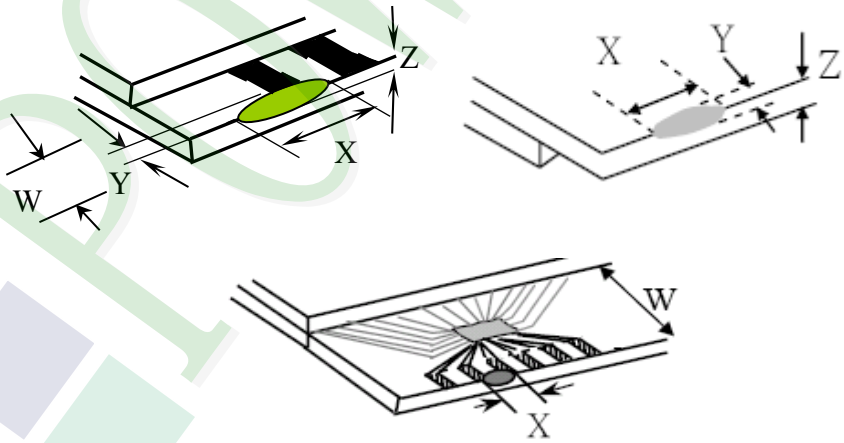

	X	Y	Z
Front	≦ a	≦ 1/2 W	≦ t
Back	≦ a	≦ W	≦ 1/2 t

◆Specification For TFT-LCD Module 3.5″ ~15″ : (Ver.B01)

NO	Item	Criterion	Level
08	The crack of glass	Symbols: X: The length of crack Y: The width of crack. Z: The thickness of crack W: terminal length t: The thickness of glass a: LCD side length 8.2.2 Non-conductive portion: 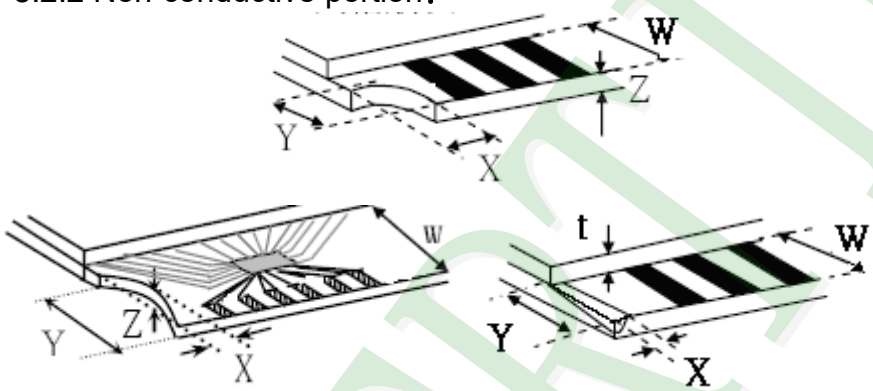 X: ≦ 1/3 a; Y: ≦ W; Z: ≦t If the chipped area touches the ITO terminal, over 2/3 of the ITO must remain and be inspected according to electrode terminal specifications. 8.2.3 Glass remain: 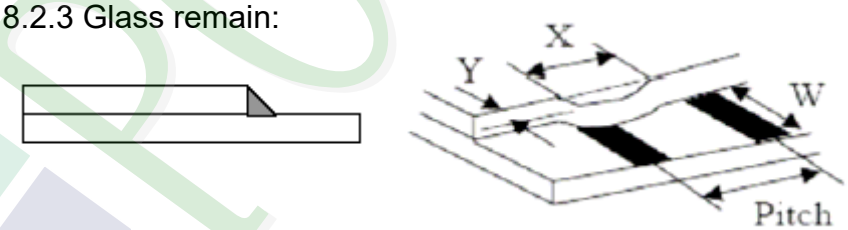 X: ≦ a; Y: ≦ 1/3 W; Z: ≦t 8.2.4 Cracking: 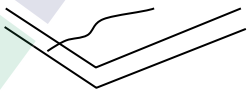 Not Allowed	Minor

◆Specification For TFT-LCD Module 3.5″~15″ : (Ver.B01)

NO	Item	Criterion	Level
09	Backlight elements	9.1 Backlight can't work normally.	Major
		9.2 Backlight doesn't light or color is wrong.	Major
		9.3 Illumination source flickers when lit.	Major
10	General appearance	10.1 Pin type, quantity, dimension must match type in structure diagram.	Major
		10.2 No short circuits in components on PCB or FPC.	Major
		10.3 Parts on PCB or FPC must be: no wrong parts, missing parts or excess parts.	Major
		10.4 Product packaging must the same as specified on packaging specification sheet.	Minor
		10.5 The folding and peeled off in polarizer are not acceptable.	Minor
		10.6 The PCB or FPC between B/L assembled distance(PCB or FPC) is ≦1.5 mm.	Minor

4. Reliability Test

4.1 Reliability Test Condition (Ver.B01)

NO.	TEST ITEM	TEST CONDITION
1	High Temperature Storage Test	Keep in 80 ±5℃ 240 hrs
2	Low Temperature Storage Test	Keep in -30 ±5℃ 240 hrs
3	High Temperature / High Humidity Storage Test	Keep in 60 ℃ / 90% R.H duration for 240 hrs (Excluding the polarizer)
4	Temperature Cycling Storage Test	-30℃ → +25℃ → 80℃ → +25℃ (30mins) (5mins) (30mins) (5mins) 20 Cycle
5	ESD Test	Air Discharge: Apply 2 KV with 5 times Discharge for each polarity +/- Contact Discharge: Apply 250 V with 5 times discharge for each polarity +/- 1. Temperature ambiance: 15℃～35℃ 2. Humidity relative: 30%～60% 3. Energy Storage Capacitance(Cs+Cd): 150pF±10% 4. Discharge Resistance(Rd): 330Ω±10% 5. Discharge, mode of operation: Single Discharge (time between successive discharges at least 1 sec) (Tolerance if the output voltage indication: ±5%)
6	Vibration Test (Packaged)	1. Sine wave 10～55 Hz frequency (1 min/sweep) 2. The amplitude of vibration: 1.5 mm 3. Each direction (X, Y, Z) duration for 2 hrs
7	Drop Test (Packaged)	Packing Weight (Kg) / Drop Height (cm): 0 ~ 45.4 — 122 45.4 ~ 90.8 — 76 90.8 ~ 454 — 61 Over 454 — 46 Drop Direction :※1 corner / 3 edges / 6 sides each 1time

◎Result Evaluation Criteria :
Under the display quality test conditions with normal operations with normal operation state.
Do not change these conditions as such changes may affect practical display function.
(Normal operation state)
Temperature：+20~30℃
Humidity：50~70%
Atmospheric pressure：86~106Kpa

5. Precaution Relating Product Handling

5.1 SAFETY

5.1.1 If the LCD panel breaks, be careful not to get the liquid crystal to touch your skin.

5.1.2 If the liquid crystal touches your skin or clothes, please wash it off immediately by using soap and water.

5.2 HANDLING

5.2.1 Avoid any strong mechanical shock which can break the glass.

5.2.2 Avoid static electricity which can damage the CMOS LSI－When working with the module, be sure to ground your body and any electrical equipment you may be using.

5.2.3 Do not remove the panel or frame from the module.

5.2.4 The polarizing plate of the display is very fragile. So, please handle it very carefully, do not touch, push or rub the exposed polarizing with anything harder than an HB pencil lead (glass, tweezers, etc.)

5.2.5 Do not wipe the polarizing plate with a dry cloth, as it may easily scratch the surface of plate.

5.2.6 Do not touch the display area with bare hands, this will stain the display area.

5.2.7 Do not use ketonic solvent & aromatic solvent. Use with a soft cloth soaked with a cleaning naphtha solvent.

5.2.8 To control temperature and time of soldering is 320 ± 10℃ and 3 ~ 5 sec.

5.2.9 To avoid liquid (include organic solvent) stained on LCM.

5.2.10 Caution! (LCM products with Capacitive Touch Panel)
Strong EMI-sources such as switch-mode power supplies (SPS) can lead to touch malfunction (e.g., ghost-touches). Therefore, the touch needs to be thoroughly tested inside the target application.

5.2.11 CAUTION: Continuously displaying same static image will result in high possibility of image sticking/image burn-in effect due to TFT panel characteristic.

5.2.12 Double-sided tape designed to be attached with the customer's mechanical device, please follow up the rules and regulations published by the original manufacturer of double-side tape for the attachment operation.

5.3 STORAGE

5.3.1 Store the panel or module in a dark place where the temperature is 25℃ ± 5℃ and the humidity is below 65% RH.

5.3.2 Do not place the module near organics solvents or corrosive gases.

5.3.3 Do not crush, shake, or jolt the module.

5.4 TERMS OF WARRANTY

5.4.1 Applicable warrant period
The period is within thirteen months since the date of shipping out under normal using and storage conditions.

5.4.2 Unaccepted responsibility
This product has been manufactured to your company's specification as a part for use in your company's general electronic products. It is guaranteed to perform according to delivery specifications. For any other use apart from general electronic equipment, we cannot take responsibility if the product is used in nuclear power control equipment, aerospace equipment, fire and security systems or any other applications in which there is a direct risk to human life and where extremely high levels of reliability are required.

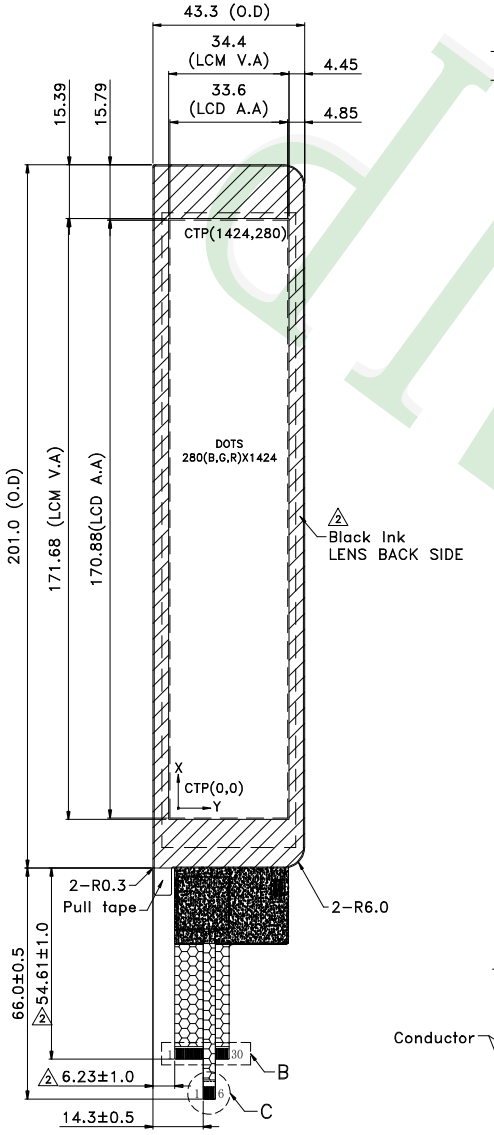

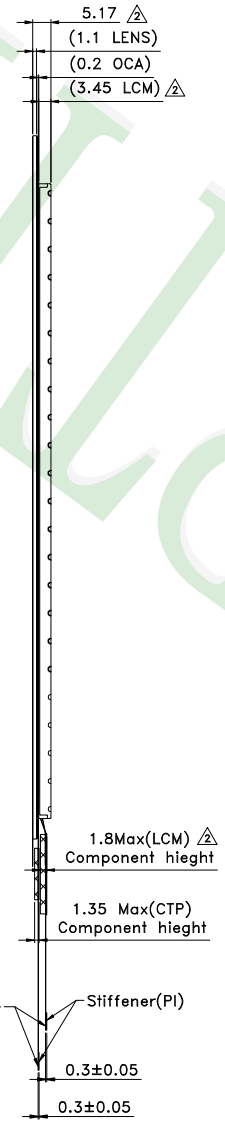

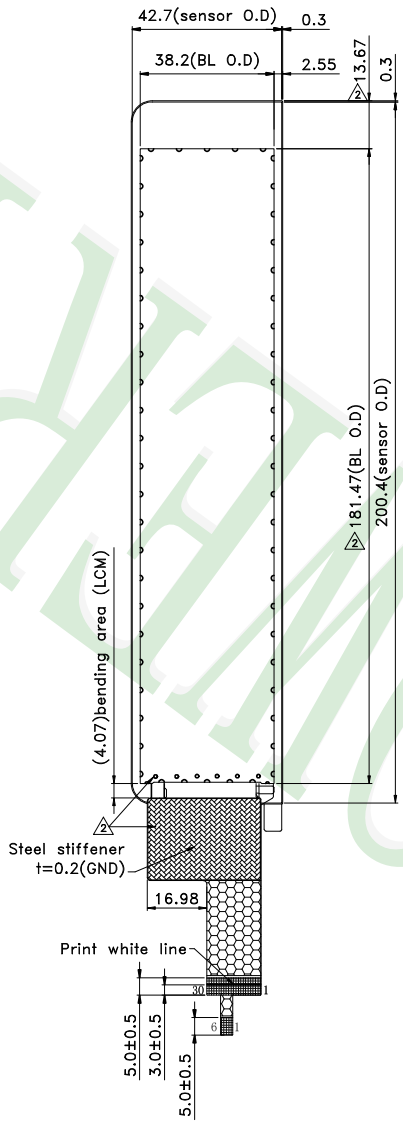

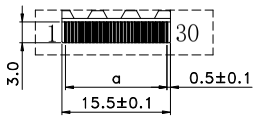

Detial B
Scale 2X

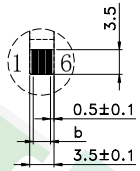

Detial C
Scale 2X

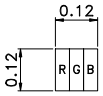

Detail DOS
Scale 100X

NOTES:
1.LCD TYPE: TFT
2.LCD DISPLAY:Nomally Black/Transmissive
3.The tolerance unless classified ±0.3mm
4.LCM FPC suggested connector :FH34SRJ-30S-0.5SH(Hirose) or compatible
5.CTP FPC suggested connector :FH34SRJ-6S-0.5SH(Hirose) or compatible
6. :Kapton tape; :Component area; :Stiffener(PI); :EMI Film
:Stiffener (SUS t=0.2mm to GND)
7.a=P0.5X29=14.5±0.05 ; W=0.3±0.05
8.b=P0.5X5=2.5±0.05 ; W=0.3±0.05
9.CTP IC: FT5426

REV	REV BY	REVISER	DATE
007			
006			
005			
004			
003			
002	Modify DRAWING	Clare	2023/10/31
001	NEW DRAWING	Clare	2023/8/22

PART NO: PH280142T001-ZBR

DRAWING NAME : LMD-PH280142T001-ZBR

TITLE: LCD MODULE DRAWING

久正光電股份有限公司
POWERTIP TECHNOLOGY CORPORATION

Design	Clare	(3)	Surface		
Check	Tina	Unit	MM	Material	
Approve	Bright	Scale	FIT	Thickness	
		Page	1/1	Quantity	

Length(Min) (mm) \ Tolerance Precision	Precision Level
1 ~ 4	-
4 ~ 16	-
16 ~ 63	-
63 ~ 250	-
250 ~ 1000	-

PT-A-054-01

Ver.002

Documents NO.	PKG-PH280142T001-ZBR

Packaging Specifications

Approve	Check	Contact
Bright	Tina	Clare

1.包裝材料規格表(Packaging Material) : (per carton)

No.	Item	Model	Dimensions (mm)	1Pcs Weight	Quantity	Total Weight
1	成品 (LCM)	PH280142T001-ZBR	43.3 X 201.0	0.0771	96	7.4016
2	靜電袋(1)Antistatic Bag	BAG350120ARABA △2	350 X 120	0.0042	96	0.4032
3	A2-1隔板(2)A2-1 Partition	BX29500072BZBA	295 X 72 X 3.0	0.0109	104	1.1336
4	B2-1隔板(3)B2-1 Partition	BX24500072BZBA	245 X 72 X 3.0	0.0094	16	0.1504
5	氣泡紙(4)Bubble Sheet	BAG280240BWABA	280 X 240	0.006	16	0.096
6	C2內盒(5)Product Box	BX31025580AABA	310 X 255 X 86	0.16	8	1.28
7	外紙箱(6)Carton	BX52732536CCBA	527 X 325 X 360	0.83	1	0.83
8	舒美墊(7)EPE	OTFOAMEP0005BA	333 X 218 X 20	0.036	1	0.036
9						

2.一 整箱總重量 (Total LCD Weight in carton) : 11.33 Kg±10% △2

3.單箱數量規格表(Packaging Specifications and Quantity) :

(1)Quantity Of Spacer : A2-1 隔板 X 13 , B2-1 隔板 X 2

(2)Total LCM quantity in carton : quantity per box 12 x no of boxes 8 = 96

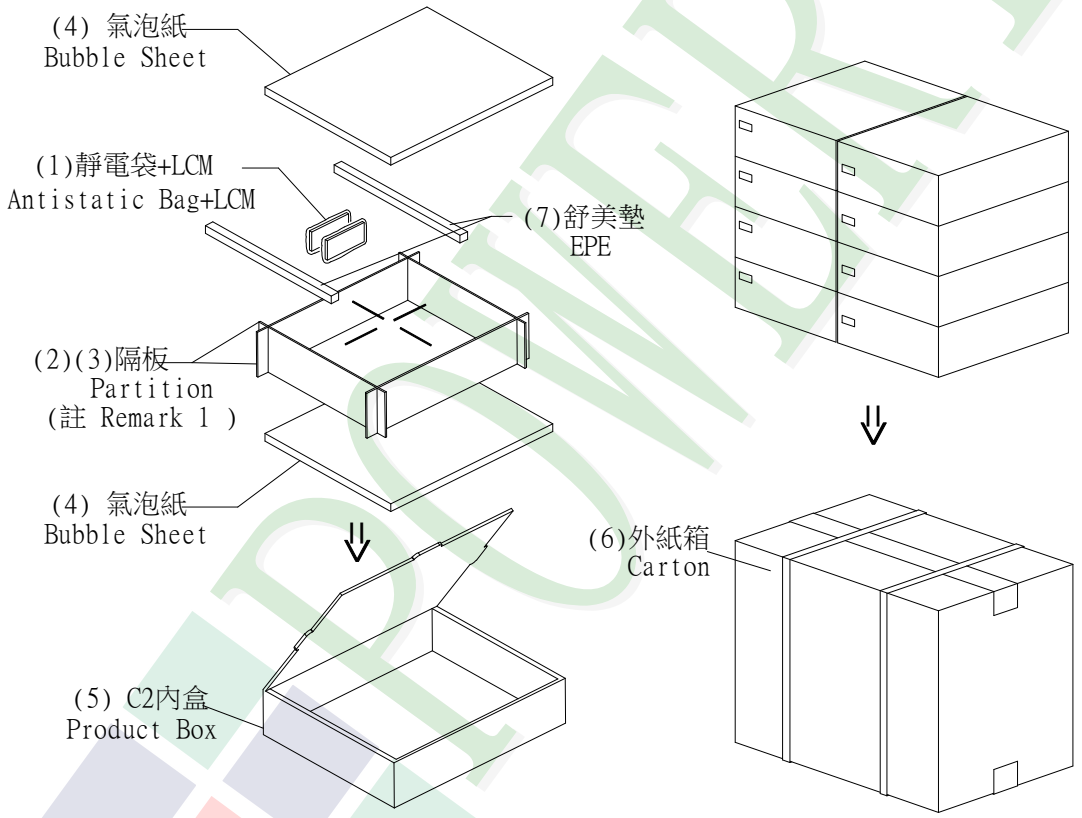

特 記 事 項 (REMARK)

1. LCM排放示意圖(前後間隔不放置):
1. LCM placed as figure showing:
(First and last slot should be empty)

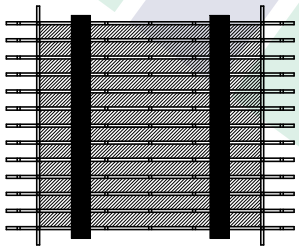

模組(LCM) X 1pcs.
EPE(7)cut X 2pcs.

2.OTFOAMEP0005BA可裁 22 PCS:
尺寸:15.0 X 218.0 X 20.0 mm
2.OTFOAMEP0005BA cut 22 PCS:
Size:15.0 X 218.0 X 20.0 mm