FLUKE®

# 726

## Multifunction Process Calibrator

# Users Manual

September 2005

© 2005 Fluke Corporation. All rights reserved.
All product names are trademarks of their respective companies.

sales@prom-elec.com / ООО ПРОМЭЛЕКТРОНИКА

## LIMITED WARRANTY AND LIMITATION OF LIABILITY

Each Fluke product is warranted to be free from defects in material and workmanship under normal use and service. The warranty period is three years and begins on the date of shipment. Parts, product repairs, and services are warranted for 90 days. This warranty extends only to the original buyer or end-user customer of a Fluke authorized reseller, and does not apply to fuses, disposable batteries, or to any product which, in Fluke's opinion, has been misused, altered, neglected, contaminated, or damaged by accident or abnormal conditions of operation or handling. Fluke warrants that software will operate substantially in accordance with its functional specifications for 90 days and that it has been properly recorded on non-defective media. Fluke does not warrant that software will be error free or operate without interruption.

Fluke authorized resellers shall extend this warranty on new and unused products to end-user customers only but have no authority to extend a greater or different warranty on behalf of Fluke. Warranty support is available only if product is purchased through a Fluke authorized sales outlet or Buyer has paid the applicable international price. Fluke reserves the right to invoice Buyer for importation costs of repair/replacement parts when product purchased in one country is submitted for repair in another country.

Fluke's warranty obligation is limited, at Fluke's option, to refund of the purchase price, free of charge repair, or replacement of a defective product which is returned to a Fluke authorized service center within the warranty period.
To obtain warranty service, contact your nearest Fluke authorized service center to obtain return authorization information, then send the product to that service center, with a description of the difficulty, postage and insurance prepaid (FOB Destination). Fluke assumes no risk for damage in transit. Following warranty repair, the product will be returned to Buyer, transportation prepaid (FOB Destination). If Fluke determines that failure was caused by neglect, misuse, contamination, alteration, accident, or abnormal condition of operation or handling, including overvoltage failures caused by use outside the product’s specified rating, or normal wear and tear of mechanical components, Fluke will provide an estimate of repair costs and obtain authorization before commencing the work. Following repair, the product will be returned to the Buyer transportation prepaid and the Buyer will be billed for the repair and return transportation charges (FOB Shipping Point).

THIS WARRANTY IS BUYER'S SOLE AND EXCLUSIVE REMEDY AND IS IN LIEU OF ALL OTHER WARRANTIES, EXPRESS OR IMPLIED, INCLUDING BUT NOT LIMITED TO ANY IMPLIED WARRANTY OF MERCHANTABILITY OR FITNESS FOR A PARTICULAR PURPOSE. FLUKE SHALL NOT BE LIABLE FOR ANY SPECIAL, INDIRECT, INCIDENTAL OR CONSEQUENTIAL DAMAGES OR LOSSES, INCLUDING LOSS OF DATA, ARISING FROM ANY CAUSE OR THEORY.

Since some countries or states do not allow limitation of the term of an implied warranty, or exclusion or limitation of incidental or consequential damages, the limitations and exclusions of this warranty may not apply to every buyer. If any provision of this Warranty is held invalid or unenforceable by a court or other decision-maker of competent jurisdiction, such holding will not affect the validity or enforceability of any other provision.

Fluke Corporation
P.O. Box 9090
Everett, WA  98206-9090
U.S.A.

Fluke Europe B.V.
P.O. Box 1186
5602 BD Eindhoven
The Netherlands

11/99

# Table of Contents


| Title | Page |
|---|---|
| Introduction | 1 |
| Contacting Fluke | 1 |
| Standard Equipment | 3 |
| Safety Information | 3 |
| Symbols | 7 |
| Getting Acquainted with the Calibrator | 8 |
| Input and Output Terminals | 8 |
| Keys | 10 |
| Display | 13 |
| Configuration Menus | 14 |
| Contrast Adjustment | 14 |
| Shut Down Mode | 15 |
| CJC | 15 |
| Celcius and Fahrenheit (°C and °F) | 15 |
| Frequency Pulse Output Voltage | 15 |
| Pulse Output Frequency | 15 |

HART® Resistor ON/OFF ..... 16
Getting Started ..... 16
Voltage to Voltage Test ..... 16
Using Measure Mode ..... 18
Measuring Electrical Parameters (Upper Display) ..... 18
Current Measurement with Loop Power ..... 18
Measuring Electrical Parameters (Lower Display) ..... 20
Measuring Temperature ..... 21
Using Thermocouples ..... 21
Using Resistance-Temperature Detectors (RTDs) ..... 24
PRT Custom Curves ..... 24
Measuring Pressure ..... 27
Zeroing with Absolute Pressure Modules ..... 28
Using Source Mode ..... 30
Sourcing 4 to 20 mA ..... 30
Simulating a 4- to 20-mA Transmitter ..... 30
Sourcing Other Electrical Parameters ..... 32
Simulating Thermocouples ..... 34
Simulating RTDs ..... 36
Sourcing Pressure ..... 38
Setting 0 % and 100 % Output Parameters ..... 41
% Error Functionality ..... 41
Stepping and Ramping the Output ..... 41
Manually Stepping the mA Output ..... 42
Auto Ramping the Output ..... 42
Storing and Recalling Setups ..... 42
Store a Setup ..... 42
Recall a Setup ..... 43

Storing and Recalling Data ..... 43
Storing Data ..... 43
Recall Data ..... 44
Pulse Train Source/Read ..... 44
Calibrating a Transmitter ..... 45
Calibrating a Pressure Transmitter ..... 47
Calibrating an I/P Device ..... 49
Pressure Switch Test ..... 51
Testing an Output Device ..... 51
Remote Control Commands ..... 52
HART® Functionality ..... 52
Maintenance ..... 53
Replacing the Batteries ..... 53
Cleaning the Calibrator ..... 54
Service Center Calibration or Repair ..... 54
Replacement Parts ..... 54
Accessories ..... 56
External Fluke Pressure Module Compatibility ..... 56
Specifications ..... 59
DC Voltage Measurement and Source ..... 59
DC mA Measurement and Source ..... 59
Ohms Measurement ..... 60
Ohms Source ..... 60
Frequency Measurement ..... 60
Frequency Source ..... 61
Temperature, Thermocouples ..... 61
RTD Accuracy (Read and Source) (ITS-90) ..... 63

Loop Power Supply ..... 64
Pulse Read and Pulse Source ..... 64
Pressure Measurement ..... 64
General Specifications ..... 65

**Index**

# List of Tables


| Table | Title | Page |
|---|---|---|
| 1. | Summary of Source and Measure Functions | 2 |
| 2. | International Symbols | 7 |
| 3. | Input/Output Terminals and Connectors | 9 |
| 4. | Key Functions | 11 |
| 5. | Thermocouple Types Accepted | 22 |
| 6. | RTD Types Accepted | 25 |
| 7. | mA Step Values | 42 |
| 8. | Replacement Parts | 54 |
| 9. | Fluke Pressure Module Compatibility | 56 |
| 10. | Pressure Modules | 57 |

# List of Figures


| Figure | Title | Page |
|---|---|---|
| 1. | Standard Equipment | 6 |
| 2. | Input/Output Terminals and Connectors | 8 |
| 3. | Keys | 10 |
| 4. | Elements of a Typical Display | 13 |
| 5. | Adjusting the Contrast | 14 |
| 6. | Voltage-to-Voltage Test | 17 |
| 7. | Measuring Voltage and Current Output | 18 |
| 8. | Connections for Supplying Loop Power | 19 |
| 9. | Measuring Electrical Parameters | 20 |
| 10. | Measuring Temperature with a Thermocouple | 23 |
| 11. | Measuring Temperature with an RTD, Measuring 2-, 3-, and 4-Wire Resistance | 26 |
| 12. | Gage and Differential Pressure Modules | 27 |
| 13. | Connections for Measuring Pressure | 29 |
| 14. | Connections for Simulating a 4- to 20-mA Transmitter | 31 |
| 15. | Electrical Sourcing Connections | 33 |
| 16. | Connections for Simulating a Thermocouple | 35 |
| 17. | Connection for Simulating a 3- and 4-Wire RTD | 37 |

18. Connections for Sourcing Pressure ..... 40
19. SAVE DATA Menu Showing Measurement Memory Location 3, 1 ..... 44
20. Calibrating a Thermocouple Transmitter ..... 46
21. Calibrating a Pressure-to-Current (P/I) Transmitter ..... 48
22. Calibrating a Current-to-Pressure (I/P) Transmitter ..... 50
23. Calibrating a Chart Recorder ..... 52
24. Replacing the Batteries ..... 53
25. Replacement Parts ..... 55

# Multifunction Process Calibrator

## Introduction

The Fluke 726 Multifunction Process Calibrator (referred to as “the Calibrator”) is a handheld, battery-operated instrument that measures and sources electrical and physical parameters. See Table 1.

In addition to the functions in Table 1, the Calibrator also has the following features and functions:

- A split-screen display. The upper display allows users to measure volts, current, and pressure only. The lower display allows the user to measure and source volts, current, pressure, resistance temperature detectors, thermocouples, frequency, and ohms.
- A thermocouple (TC) input/output terminal and internal isothermal block with automatic reference-junction temperature compensation.
- Stores and recalls setups.
- Manual and automatic stepping and ramping.
- Stores and recalls calibration screens.
- Control the Calibrator remotely from a PC running a terminal emulator program.

## Contacting Fluke

To order accessories, receive operating assistance, or locate the nearest Fluke distributor or Service Center, call:

USA: 1-888-44-FLUKE (1-888-443-5853)
Canada: 1-800-36-FLUKE (1-800-363-5853)
Europe: +31 402-675-200
Japan: +81-3-3434-0181
Singapore: +65-738-5655
Anywhere in the world: +1-425-446-5500

USA Service: 1-888-99-FLUKE (1-888-993-5853)

Or, visit Fluke's Web site at www.fluke.com.
To register your product, visit register.fluke.com

**Table 1. Summary of Source and Measure Functions**

| Function | Measure | Source |
|---|---|---|
| dc V | 0 V to 30 V | 0 V to 20 V |
| dc mA | 0 to 24 mA | 0 to 24 mA |
| Frequency | 2 CPM to 15 kHz | 2 CPM to 15 kHz |
| Resistance | 0 Ω to 4000 Ω | 5 Ω to 4000 Ω |
| Thermocouple | Types E, J, K, T, B, R, S, L, U, N, C, XK, BP | |
| RTD (Resistance-Temperature Detector) | Pt100 Ω (385)<br>Pt100 Ω (3926)<br>Pt100 Ω (3916)<br>Pt200 Ω (385)<br>Pt500 Ω (385)<br>Pt1000 Ω (385)<br>Ni120 (672)<br>CU10 | |
| Pressure | 29 modules ranging from 1.0 in. $H_2O$ to 10,000 psi | |
| Pulse | 1-100,000<br>Freqency Max 10 kHz | 1-10,000<br>Frequency Range 2 CPM to 10 kHz |
| Other functions | Loop supply, HART resistor, pressure switch test, save screen, step, ramp, memory, cold junction compensation | |

## Standard Equipment

If the Calibrator is damaged or something is missing, contact the place of purchase immediately. To order replacement parts, see Table 8. The items listed below and shown in Figure 1 are included with the Calibrator.

- TL75 test leads
- AC72 alligator clips
- Stackable alligator clip test leads
- *726 Product Overview* (not shown in Figure 1)
- *725/726 CD-ROM* (contains Users Manual; not shown in Figure 1)
- 4 AA Batteries (installed)

## Safety Information

The Calibrator is designed in accordance with CAN/CSA-C22.2 NO. 61010-1-04, UL 61010-1, and ISA 82.02.01

**⚠⚠ Warning**

**To avoid possible electric shock or personal injury, use the Calibrator only as specified in this manual, otherwise the protection provided by the Calibrator may be impaired.**

A **Warning** identifies conditions and actions that pose hazard(s) to the user. A **Caution** identifies conditions and actions that may damage the Calibrator or the equipment under test.

## ⚠⚠ Warning

**To avoid possible electric shock or personal injury:**

- **Use the Calibrator only as described in the Users Manual or the protection provided by the Calibrator may be impaired.**
- **Do not apply more than the rated voltage, as marked on the Calibrator, between the terminals, or between any terminal and earth ground (30 V 24 mA max all terminals).**
- **Before each use, verify the Calibrator's operation by measuring a known voltage.**
- **Follow all equipment safety procedures.**
- **Use the proper terminals, mode, and range for the measuring or sourcing application.**
- **Never touch the probe to a voltage source when the test leads are plugged into the current terminals.**
- **Do not use the Calibrator if it is damaged. Before using the Calibrator, inspect the case. Look for cracks or missing plastic. Pay particular attention to the insulation surrounding the connectors.**
- **Select the proper function and range for the measurement.**
- **Make sure the battery door is closed and latched before operating the Calibrator.**
- **Remove test leads from the Calibrator before opening the battery door.**
- **Inspect the test leads for damaged insulation or exposed metal. Check test lead continuity. Replace damaged test leads before using the Calibrator.**
- **When using the probes, keep your fingers away from the probe contacts. Keep fingers behind the finger guards on the probes.**
- **Connect the common test lead before connecting the live test lead. When disconnecting the test leads, disconnect the live test lead first.**
- **Do not use the Calibrator if it operates abnormally. Protection may be impaired. When in doubt, have the Calibrator serviced.**
- **Do not operate the Calibrator around explosive gas, vapor, or dust.**

- **When using a pressure module, make sure the process pressure line is shut off and depressurized before connecting it or disconnecting it from the pressure module.**
- **Use only 4 AA batteries, properly installed in the Calibrator case, to power the Calibrator.**
- **Disconnect test leads before changing to another measure or source function.**
- **When servicing the Calibrator, use only specified replacement parts.**
- **To avoid false readings, which could lead to possible electric shock or personal injury, replace the battery as soon as the battery indicator (▬) appears.**
- **Turn off circuit power before connecting the Calibrator mA and COM terminals in the circuit. Place Calibrator in series with the circuit.**
- **Do not allow water into the case.**

## ⚠Caution

**To avoid possible damage to the Calibrator or to equipment under test:**

- **Disconnect the power and discharge all high-voltage capacitors before testing resistance or continuity.**
- **Use the proper input jacks, function, and range for the measurement or sourcing application.**

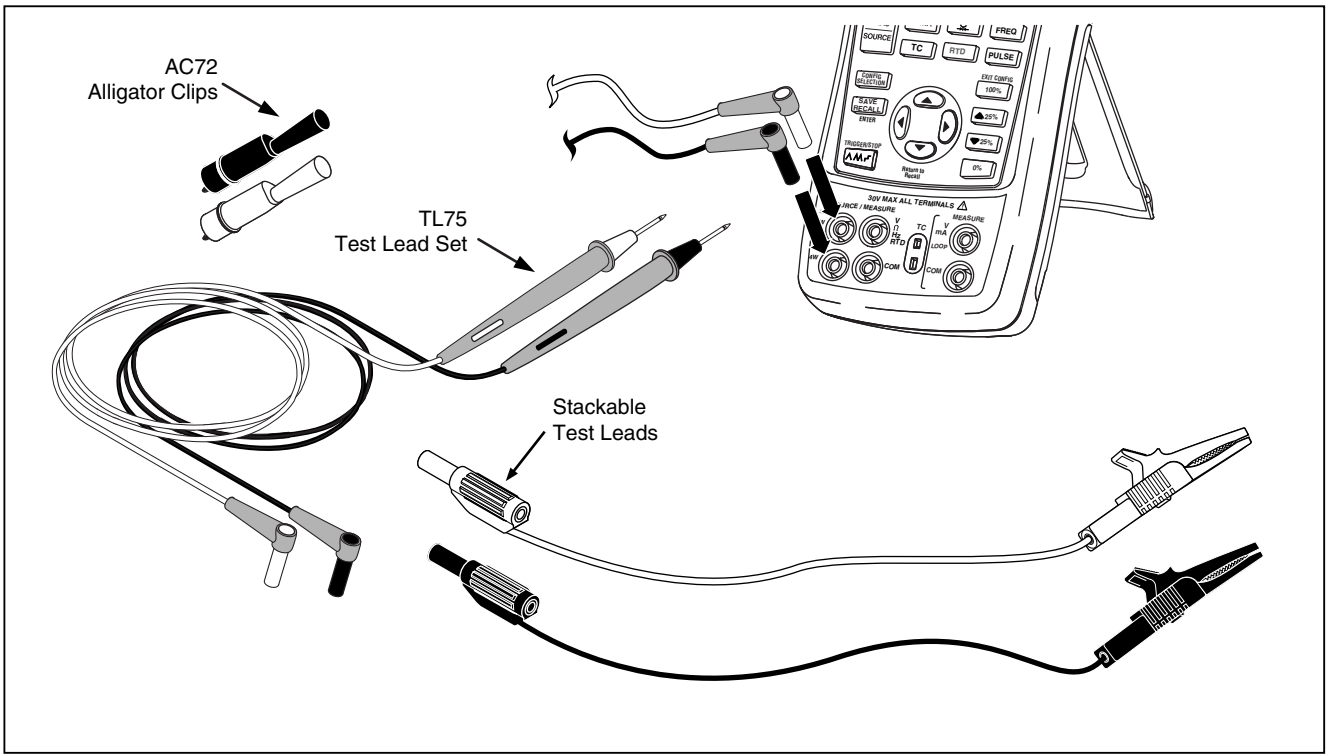


bec01f.eps

**Figure 1. Standard Equipment**

## Symbols

Symbols used on the Calibrator and in this manual are explained in Table 2.

**Table 2. International Symbols**

| | | | |
|---|---|---|---|
| ~ | AC - Alternating current | ⧈ | Double insulated |
| ⎓ | DC - Direct current | | Battery |
| ⏚ | Earth ground | ⚠ | Risk of danger. Important information. See Manual. Precedes Warning. |
| | Pressure | ⏻ | Power ON/OFF |
| CE | Conforms to European Union directives | ⚡ | Hazardous Voltage. Precedes Warning. |
| C US | Conforms to Canadian Standards Association directives. | | |

# Getting Acquainted with the Calibrator

## Input and Output Terminals

Figure 2 shows the Calibrator input and output terminals. Table 3 explains their use.

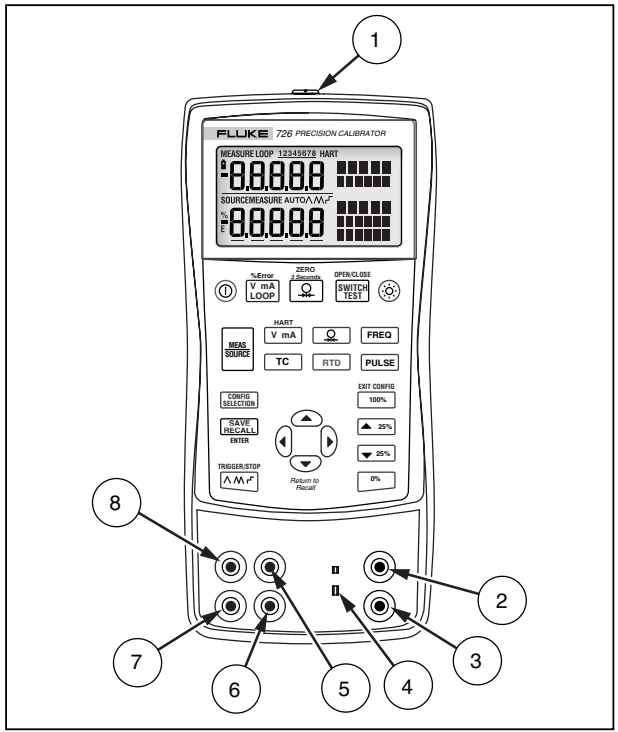


bec05f.eps

**Figure 2. Input/Output Terminals and Connectors**

**Table 3. Input/Output Terminals and Connectors**

| No | Name | Description |
|---|---|---|
| 1 | Pressure module connector/serial connector | Connects the Calibrator to a pressure module or to a PC for a remote control serial connection. |
| 2, 3 | MEASURE V, mA terminals | Input terminals for measuring voltage, current, supplying loop power, HART resistance, switch test options. |
| 4 | Thermocouple (TC) input/output | Terminal for measuring or simulating thermocouples. This terminal accepts a miniature polarized thermocouple plug with flat, in-line blades spaced 7.9 mm (0.312 in) center to center. |
| 5, 6 | SOURCE/ MEASURE V, RTD, Pulse, Hz, Ω terminals | Terminals for sourcing or measuring voltage, resistance, pulse, frequency, and RTDs. |
| 7, 8 | SOURCE/ MEASURE mA terminals, 3W, 4W | Terminals for sourcing and measuring current and performing 3 W and 4 W RTD measurements. HART resistor option in mA mode. |

## Keys

Figure 3 shows the Calibrator keys and Table 4 explains their use.

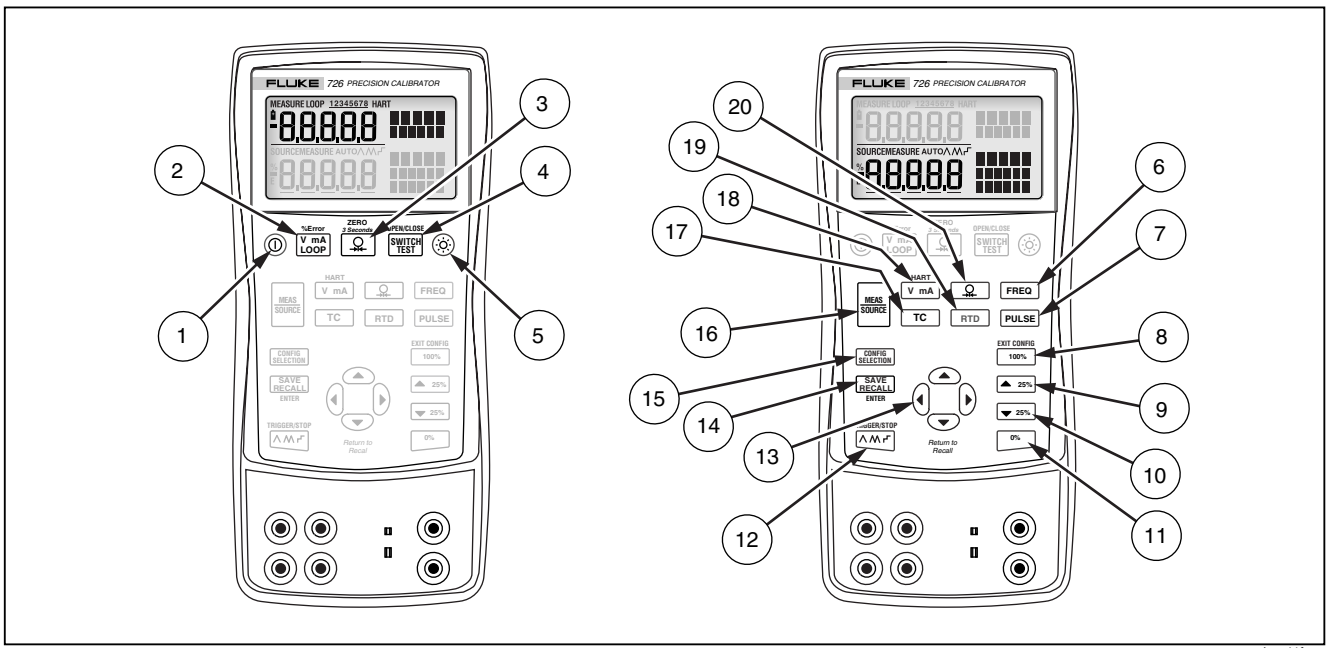


bec41f.eps

**Figure 3. Keys**

**Table 4. Key Functions**

| No | Name | Description |
|---|---|---|
| 1 | ⏻ | Turns the power on or off. |
| 2 | %Error<br>V mA LOOP | Toggles voltage, mA, or Loop Power and % Error measurement functions in the upper display. |
| 3 | ZERO<br>*3 Seconds* | Selects the pressure measurement function in the upper display. Repeated pushes cycle through the different pressure units. Zeros pressure when held for 3 seconds. |
| 4 | OPEN/CLOSE<br>SWITCH TEST | Activates the switch test. |
| 5 | ☼ | Turns backlight on or off. |
| 6 | FREQ | Selects frequency sourcing or measurement. |
| 7 | PULSE | Selects pulse sourcing or measurement. |
| 8 | EXIT CONFIG<br>100% | Recalls a source value from memory corresponding to 100 % of span and sets it as the source value. Press and hold to store the source value as the 100 % value.<br>Exits Configuration Menu. |
| 9 | ▲ 25% | Increments output by 25 % of span. |
| 10 | ▼ 25% | Decrements output by 25 % of span. |
| 11 | 0% | Recalls from memory a source value corresponding to 0 % of span and sets it as the source value. Press and hold to store the source value as the 0 % value.<br>Press and hold when powering up to identify the firmware version. The firmware version is shown in the upper display for about 1 second after initialization. |

**Table 4. Key Functions (cont.)**

| No | Name | Description |
|---|---|---|
| 12 | TRIGGER/STOP | Cycles through :<br>Slow repeating 0 % - 100 % - 0 % ramp<br>Fast repeating 0 % - 100 % - 0 % ramp<br>Repeating 0 % - 100 % - 0 % ramp in 25 % steps<br>Used for the pulse train and totalizer functions. |
| 13 | *Return to Recall* | Increases or decreases the source level.<br>Cycles through the 2-, 3-, and 4-wire selections.<br>Moves through the memory locations of Calibrator setups.<br>Moves through the configuration menus. |
| 14 | SAVE RECALL<br>ENTER | Saves and recalls setups & data.<br>ENTER is used in the configuration menus. |
| 15 | CONFIG SELECTION | Used to enter and navigate the configuration menus. |
| 16 | MEAS SOURCE | Cycles the Calibrator through MEASURE and SOURCE modes in the lower display. |
| 17 | TC | Selects TC (thermocouple) measurement and sourcing function in the lower display. Repeated pushes cycle through the thermocouple types. |
| 18 | HART<br>V mA | Toggles between voltage, mA sourcing, or mA simulate functions in the lower display.<br>Inserts a 250 Ω resistor when in mA. |
| 19 | RTD | Selects RTD (resistance temperature detector) measurement and sourcing function in lower display. Repeated pushes cycle through the RTD types. Selects resistance mode. |
| 20 | Ω PR | Selects the pressure measurement and sourcing function. Repeated pushes cycle through the different pressure units. |

## Display

Figure 4 shows the elements of a typical display.

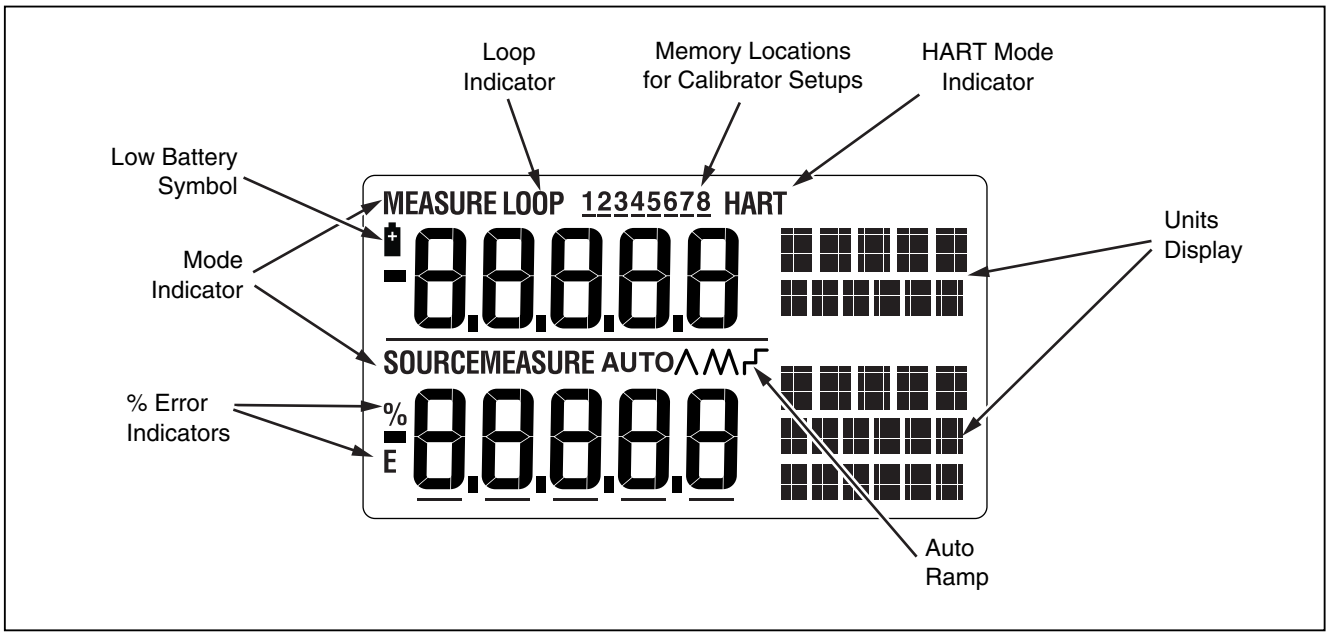


bec07f.eps

**Figure 4. Elements of a Typical Display**

## Configuration Menus

Use the configuration menus to set or change these parameters of the Calibrator:

- Contrast Adjustment
- Shut Down Mode
- CJC on/off
- °C/°F
- Frequency/Pulse output voltage
- Pulse output frequency
- HART resistor on/off

To enter the configuration menus, press [CONFIG SELECTION]. Press [SAVE RECALL], to save new configuration. Press [100%]/**EXIT CONFIG** to exit configuration.

Configuration menus are explained below.

### Contrast Adjustment

To adjust the contrast (see Figure 5):

1. Press [CONFIG SELECTION] until Contst Adjust appears on the display.
2. Use ⌃ and ⌄ to adjust the contrast up and down.
3. Press [SAVE RECALL] to save the setting.

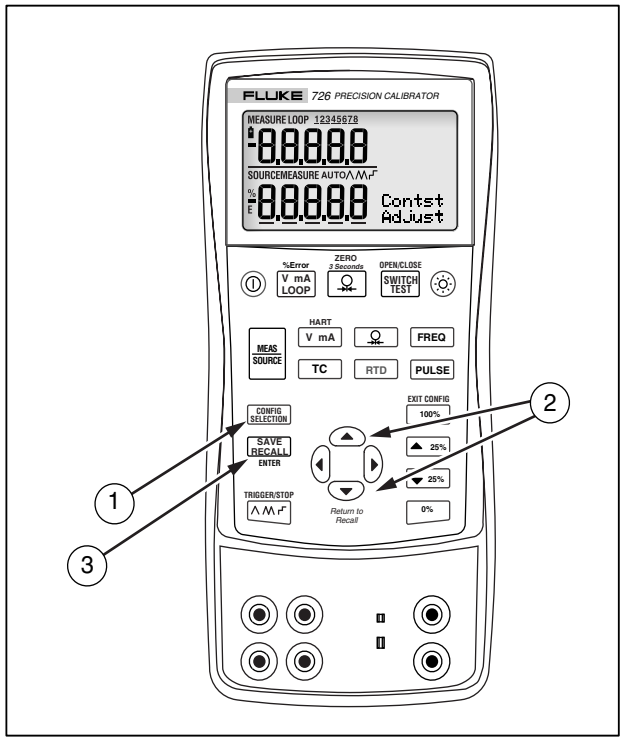


bec06f.eps

**Figure 5. Adjusting the Contrast**

## Shut Down Mode

The Calibrator comes with a shut down mode set for 30 minutes (displayed for about 1 second when the Calibrator is initially turned on). When shut down mode is enabled, the Calibrator automatically shuts down after the elapsed time from when the last key was pressed.

1. Press [CONFIG SELECTION] until SHUT DOWN appears on the display.
2. Use ⌃ and ⌄ to increase or decrease the time.
3. Press [SAVE RECALL] to save the setting.

## CJC

Cold Junction Compensation (CJC) is a value for the cold end of a thermocouple at the Meter's end.

1. Press [CONFIG SELECTION] until SELECT CJC appears on the display.
2. Use ◖ and ◗ to select ON or OFF.
3. Press [SAVE RECALL] to save the setting.

## Celcius and Fahrenheit (°C and °F)

1. Press [CONFIG SELECTION] until SELECT UNIT °C (or °F) appears on the display.
2. Use ⌃ and ⌄ to select °C or °F.
3. Press [SAVE RECALL] to save the setting.

## Frequency Pulse Output Voltage

1. Press [CONFIG SELECTION] until FREQ OUTPUT V Adjust appears on the display.
2. Use ⌃, ⌄, ◖ and ◗ to adjust the frequency pulse output voltage from 1 to 20 V.
3. Press [SAVE RECALL] to save the setting.

## Pulse Output Frequency

1. Press [CONFIG SELECTION] until PULSE OUTPUT Hz FREQ Adjust appears on the display.
2. Use ⌃, ⌄, ◖ and ◗ to adjust the pulse output frequency from 2 CPM to 15 kHz.
3. Press [SAVE RECALL] to save the setting.

## HART® *Resistor ON/OFF*

1. Press [CONFIG SELECTION] until SELECT HART ON or OFF appears on the display.
2. Use [V mA] to toggle ON or OFF.
3. Press [SAVE RECALL] to save the setting.

*Note*

*When HART mode is selected, the 250 Ω resistor is turned on both mA channels.*

# *Getting Started*

This section details some basic operations of the Calibrator.

## *Voltage to Voltage Test*

To perform a voltage-to-voltage test:

1. Connect the Calibrator's voltage output to its voltage input as shown in Figure 6.
2. Press (⏻) to turn on the Calibrator. Press [V mA LOOP] to select dc voltage (upper display).
3. If necessary, press [MEAS SOURCE] for SOURCE mode (lower display). The Calibrator is still measuring dc voltage, the active measurements are visible in the upper display.
4. Press [V mA] to select dc voltage sourcing.
5. Press (◀) and (▶) to select a digit to change. Press (▲) to select 1 V for the output value. Press and hold [0%] to enter 1 V as the 0 % value.
6. Press (▲) to increase the output to 5 V. Press and hold [100%] to enter 5 V as the 100 % value.
7. Press [▲25%] and [▼25%] to step between 0 and 100 % in 25 % step increments.

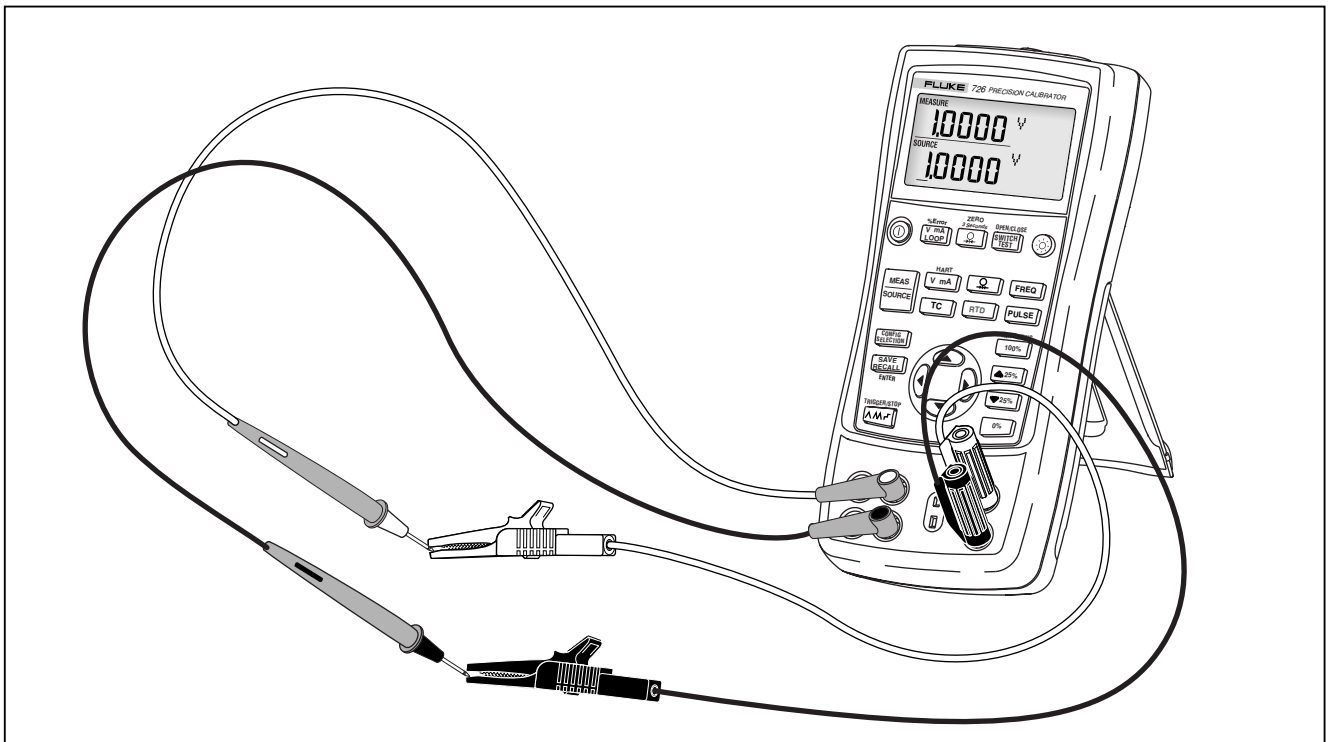


bec39f.eps

**Figure 6. Voltage-to-Voltage Test**

# Using Measure Mode

## Measuring Electrical Parameters (Upper Display)

To measure the current or voltage output of a transmitter, or to measure the output of a 700 Series pressure module, use the upper display and proceed as follows:

1. Press [V mA LOOP] to select volts or current. LOOP should not be on.
2. Connect the leads as shown in Figure 7.

## Current Measurement with Loop Power

The loop power function activates a 24 V supply in series with the current measuring circuit, allowing you to test a transmitter when it is disconnected from plant wiring. To measure current with loop power:

1. Connect the Calibrator to the transmitter current loop terminals as shown in Figure 8.
2. Press [V mA LOOP] while the Calibrator is in current measurement mode. LOOP appears and an internal 24 V loop supply turns on.

*Note*

*When HART resistor mode is selected, the 250 Ω resistor is turned on both mA channels.*

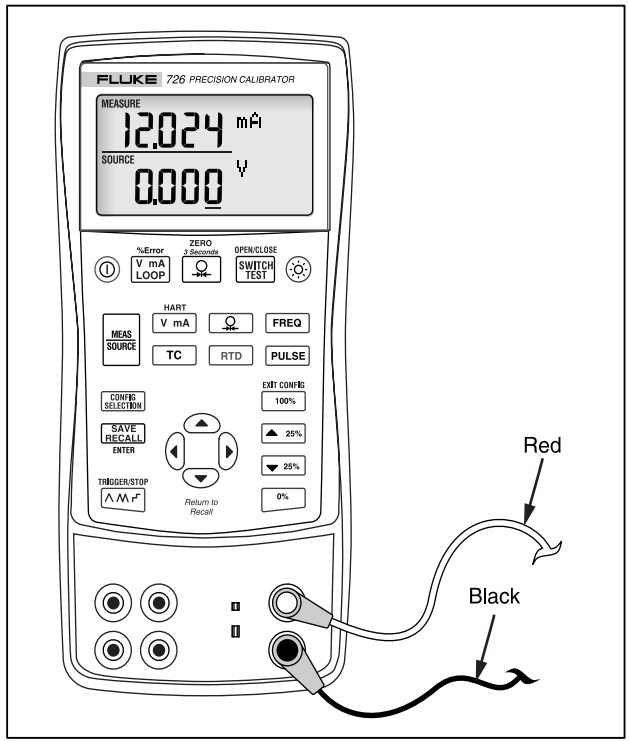


bec42f.eps

**Figure 7. Measuring Voltage and Current Output**

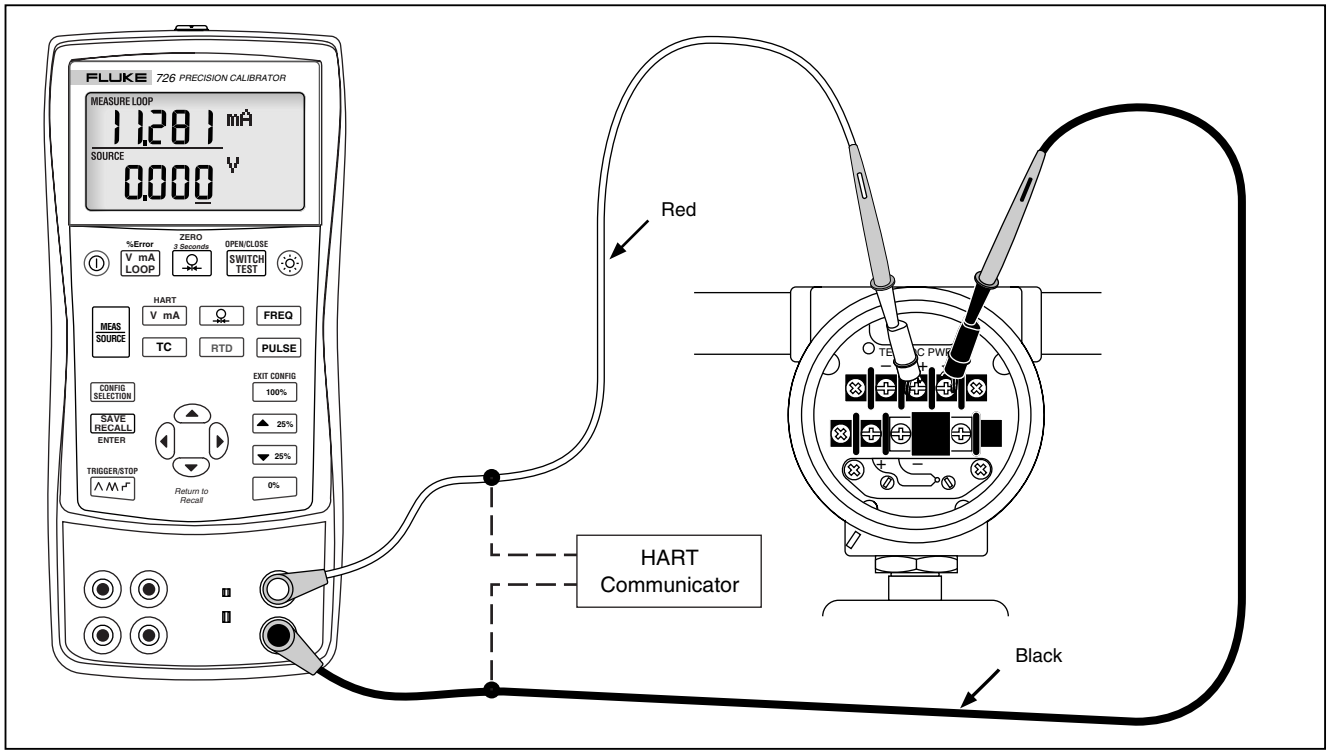


bec18f.eps

**Figure 8. Connections for Supplying Loop Power**

## *Measuring Electrical Parameters (Lower Display)*

To measure electrical parameters using the lower display, proceed as follows:

1. Connect the Calibrator as shown in Figure 9.
2. If necessary, press [MEAS SOURCE] for MEASURE mode (lower display).
3. Press [V mA] for dc voltage or current, [FREQ] for frequency, and [RTD] for resistance.

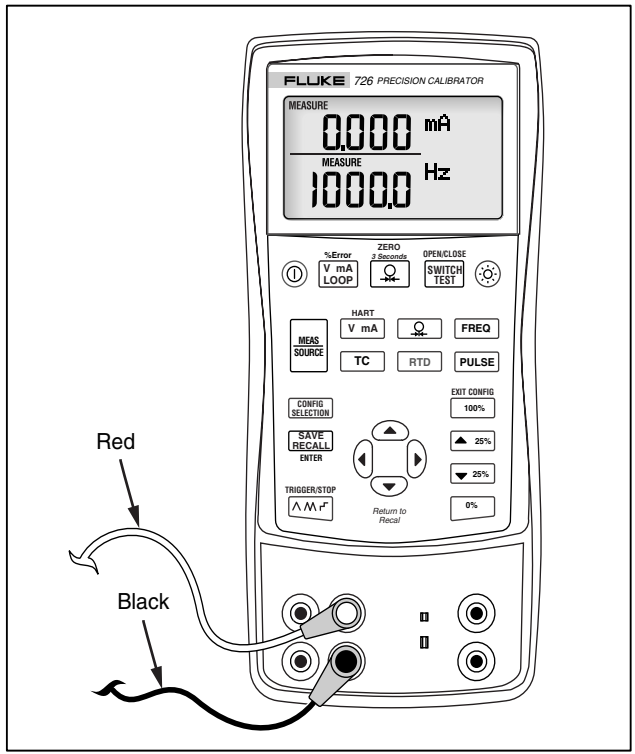


bec43f.eps

**Figure 9. Measuring Electrical Parameters**

## Measuring Temperature

### Using Thermocouples

The Calibrator supports 13 standard thermocouples. Table 5 summarizes the ranges and characteristics of each.

To measure temperature using a thermocouple:

1. Select Celsius or Fahrenheit, depending on the desired measurement. Refer to “Configuration Menus” for more information.
2. Attach the thermocouple leads to the appropriate TC miniplug, then to the TC input/output as shown in Figure 10.

**⚠ Caution**

**One pin is wider than the other. Do not try to force a miniplug into the wrong polarization**.

*Note*

*If the Calibrator and the thermocouple plug are at different temperatures, wait one minute or more for the connector temperature to stabilize after plugging the miniplug into the TC input/output.*

3. If necessary, press [MEAS SOURCE] for MEASURE mode.
4. Press [TC] for the thermocouple display. Continue pressing this key to select the desired thermocouple type.

**Table 5. Thermocouple Types Accepted**

| Type | Positive Lead Material | Positive Lead (H) Color | | Negative Lead Material | Specified Range (°C) |
|---|---|---|---|---|---|
| | | ANSI* | IEC** | | |
| E | Chromel | Purple | Violet | Constantan | -200 to 950 |
| N | Ni-Cr-Si | Orange | Pink | Ni-Si-Mg | -200 to 1300 |
| J | Iron | White | Black | Constantan | -200 to 1200 |
| K | Chromel | Yellow | Green | Alumel | -200 to 1370 |
| T | Copper | Blue | Brown | Constantan | -200 to 400 |
| B | Platinum (30 % Rhodium) | Gray | | Platinum (6 % Rhodium) | 600 to 1800 |
| R | Platinum (13 % Rhodium) | Black | Orange | Platinum | -20 to 1750 |
| S | Platinum (10 % Rhodium) | Black | Orange | Platinum | -20 to 1750 |
| L | Iron | | | Constantan | -200 to 900 |
| U | Copper | | | Constantan | -200 to 400 |
| C | Tungsten 5% Rhenium | White | None | Tungsten 26% Rhenium | 0 to 2316 |
| BP | 90.5 % Ni + 9.5 % Cr | GOST | | 56 % Cu + 44 % Ni | -200 to 800 |
| | | Violet or Black | | | |
| XK | 95 % W + 5 % Re | Red or Pink | | 80 % W + 20 % Re | 0 to 2500 |

*American National Standards Institute (ANSI) device negative lead (L) is always red.

**International Electrotechnical Commission (IEC) device negative lead (L) is always white.

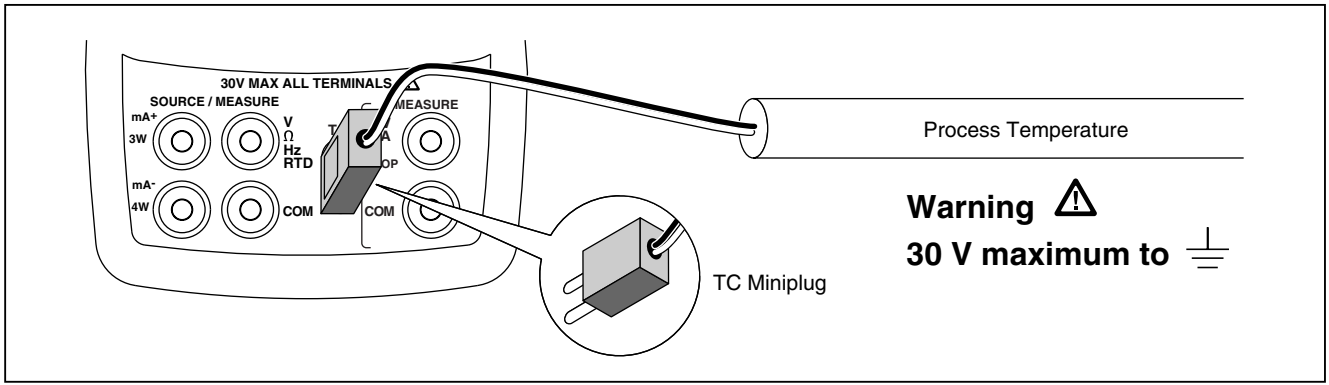


bec12f.eps

**Figure 10. Measuring Temperature with a Thermocouple**

## *Using Resistance-Temperature Detectors (RTDs)*

The Calibrator accepts RTD types shown in Table 6. RTDs are characterized by their resistance at 0 °C (32 °F), which is called the “ice point” or $R_0$. The most common $R_0$ is 100 Ω. The Calibrator accepts RTD measurement inputs in two-, three-, or four-wire connections, with the three-wire connection the most common. A four-wire configuration provides the highest measurement precision, and two-wire provides the lowest measurement precision.

To measure temperature using an RTD input:

1. If necessary, press [MEAS SOURCE] for MEASURE mode.
2. Press [RTD] for the RTD display. Continue pressing this key to select the desired RTD type.
3. Press ⌃ or ⌄ to select a 2-, 3-, or 4- wire connection.
4. Attach the RTD to input terminals as shown in Figure 11.

## ***PRT Custom Curves***

Up to three custom curves can be named and CVD coefficients can be entered through the serial port. Names can be up to six characters. For more information, see the Application Note on the 725/726 CD.

**Table 6. RTD Types Accepted**

| RTD Type | Ice Point ($R_0$) | Material | α | Range (°C) |
|---|---|---|---|---|
| Pt100 (3926) | 100 Ω | Platinum | 0.003926 Ω/°C | -200 to 630 |
| Pt100 (385) | 100 Ω | Platinum | 0.00385 Ω/°C | -200 to 800 |
| Ni120 (672) | 120 Ω | Nickel | 0.00672 Ω/°C | -80 to 260 |
| Pt200 (385) | 200 Ω | Platinum | 0.00385 Ω/°C | -200 to 630 |
| Pt500 (385) | 500 Ω | Platinum | 0.00385 Ω/°C | -200 to 630 |
| Pt1000 (385) | 1000 Ω | Platinum | 0.00385 Ω/°C | -200 to 630 |
| Pt100 (3916) | 100 Ω | Platinum | 0.003916 Ω/°C | -200 to 630 |
| The IEC standard RTD commonly used in U.S. industrial applications is the Pt100 (385), α = 0.00385 Ω/°C. Pt100 (3916), α = 0.003916 Ω/°C is also designated as JIS curve. | | | | |

Custom RTDs may also be added, see PRT Custom Curves

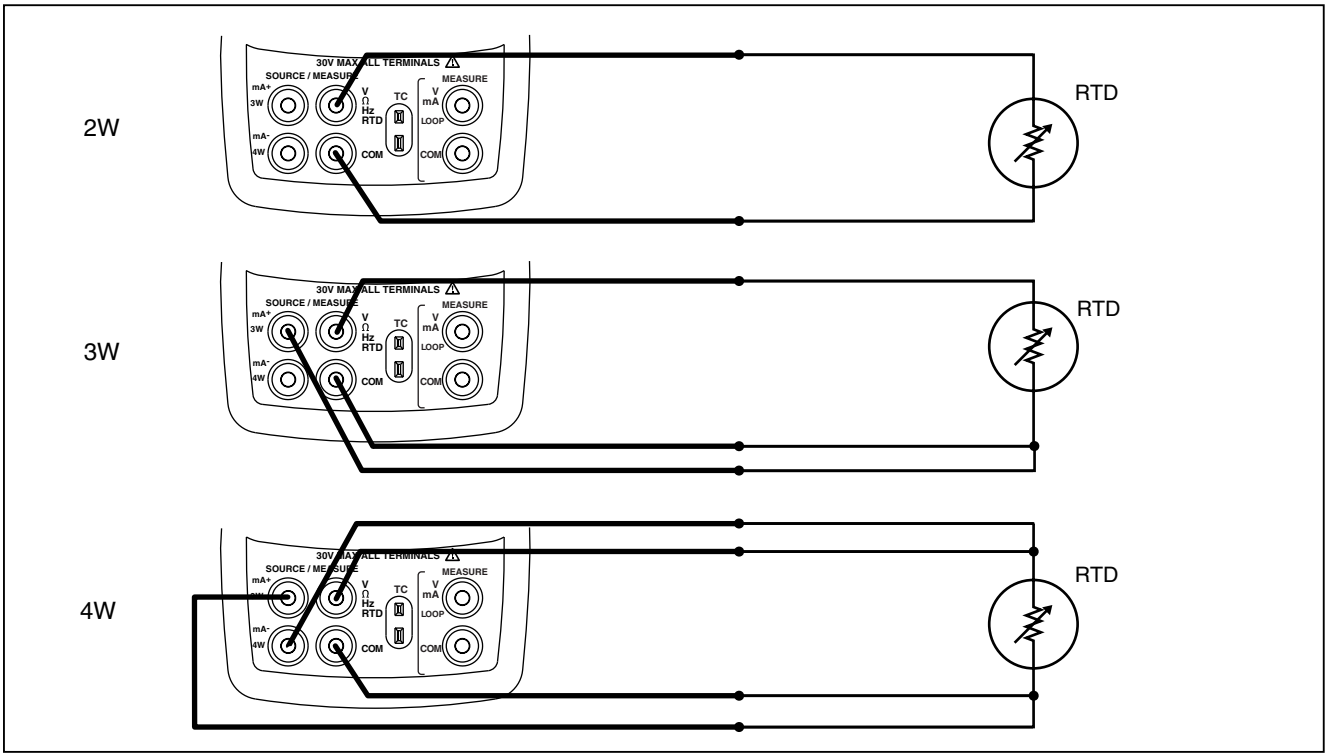


bec15f.eps

**Figure 11. Measuring Temperature with an RTD, Measuring 2-, 3-, and 4-Wire Resistance**

## Measuring Pressure

Many ranges and types of pressure modules are available from Fluke, see “Accessories”. Before using a pressure module, read its instruction sheet. The modules vary in use, media, and accuracy.

Figure 12 shows the gage and differential modules. Differential modules also work in gage mode by leaving the low fitting open to atmosphere.

To measure pressure, attach the appropriate pressure module for the process pressure to be tested, and proceed as follows:

### ⚠ Warning

**To avoid a violent release of pressure in a pressurized system, shut off the valve and slowly bleed off the pressure before attaching the pressure module to the pressure line.**

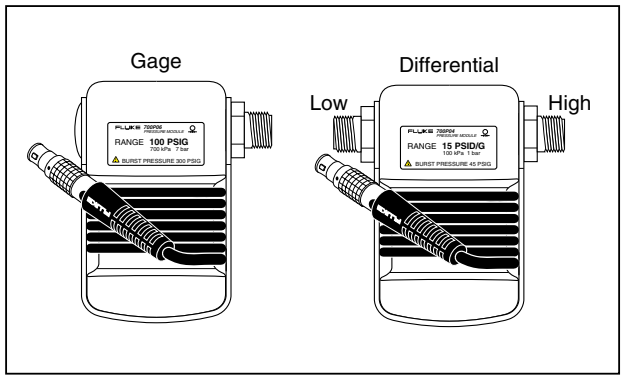


gj11f.eps

**Figure 12. Gage and Differential Pressure Modules**

### ⚠ Caution

**To avoid mechanically damaging the pressure module:**

- **Never apply more than 10 ft.-lb. (13.5 Nm) of torque between the pressure module fittings, or between the fittings and the body of the module. Always apply appropriate torque between the pressure module fitting and connecting fittings or adapters.**

- **Never apply pressure above the rated maximum printed on the pressure module.**
- **Only use the pressure module with specified materials. Refer to the printing on the pressure module or the pressure module instruction sheet for the acceptable material compatibility.**

1. Connect a pressure module to the Calibrator as shown in Figure 13. The threads on the pressure modules accept standard ¼ NPT pipe fittings. Use the supplied ¼ NPT to ¼ ISO adapter if necessary.
2. Press either [Ω] or [Ω]. The Calibrator automatically senses which pressure module is attached and sets its range accordingly.
3. Zero the pressure module as described in the module's Instruction Sheet. Modules vary in zeroing procedures depending on module type, but all require pressing [Ω] for 3 seconds.

   Continue pressing [Ω] to change pressure display units to psi, mmHg, inHg, $cmH_2O$@4 °C, $cmH_2O$@20 °C, $inH_2O$@4 °C, $inH_2O$@20 °C, $inH_2O$@60 °F, mbar, bar, $kg/cm^2$, or kPa.

## *Zeroing with Absolute Pressure Modules*

To zero, adjust the Calibrator to read a known pressure. This can be barometric pressure, if it is accurately known, for all but the 700PA3 module. The maximum range of 700PA3 is 5 psi; therefore the reference pressure must be applied with a vacuum pump. An accurate pressure standard can also apply a pressure within range for any absolute pressure module. To adjust the Calibrator reading, proceed as follows:

1. Press [Ω], REF Adjust appears to the right of the pressure reading.
2. Use ⌃ to increase or ⌄ to decrease the Calibrator reading to equal the reference pressure.
3. Press [Ω] again to exit the zeroing procedure.

The Calibrator stores and automatically reuses the zero offset correction for one absolute-pressure module so that the module is not rezeroed every time you use it.

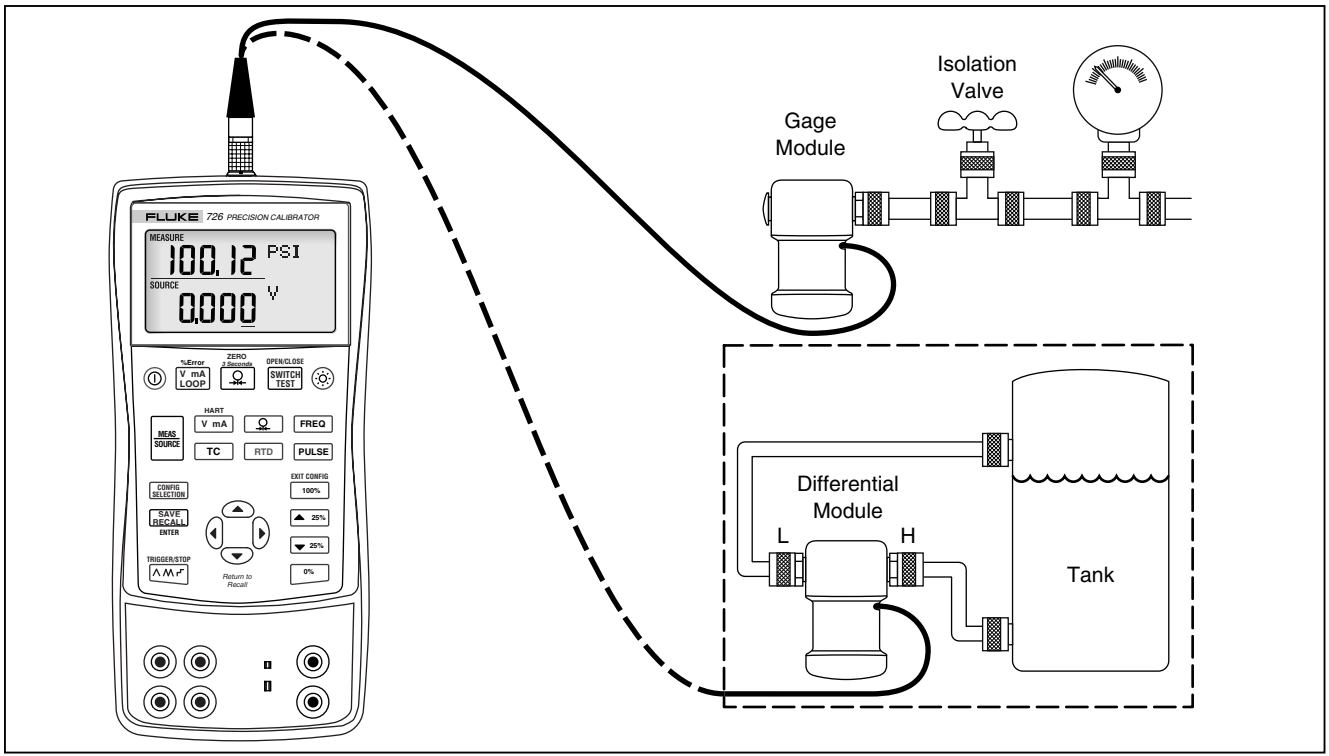


bec37f.eps

**Figure 13. Connections for Measuring Pressure**

# Using Source Mode

In SOURCE mode, the Calibrator:

- generates calibrated signals for testing and calibrating process instruments
- supplies voltages, currents, frequencies, and resistances
- simulates the electrical output of RTD and thermocouple temperature sensors
- measures gas pressure from an external source, creating a calibrated pressure source.

## Sourcing 4 to 20 mA

To select the current sourcing mode, proceed as follows:

1. Connect the test leads in the mA terminals (left column).
2. If necessary, press [MEAS SOURCE] for SOURCE mode.
3. Press [V mA] for current and enter the desired current by pressing ⌃,⌄,⟨, and ⟩.

## Simulating a 4- to 20-mA Transmitter

Simulate is a special mode of operation in which the Calibrator is connected into a loop in place of a transmitter and supplies a known, settable test current. Proceed as follows:

1. Connect the 24 V loop power source as shown in Figure 14.
2. If necessary, press [MEAS SOURCE] for SOURCE mode.
3. Press [V mA] until both mA and SIM display.
4. Enter the desired current by pressing ⌃,⌄,⟨, and ⟩.

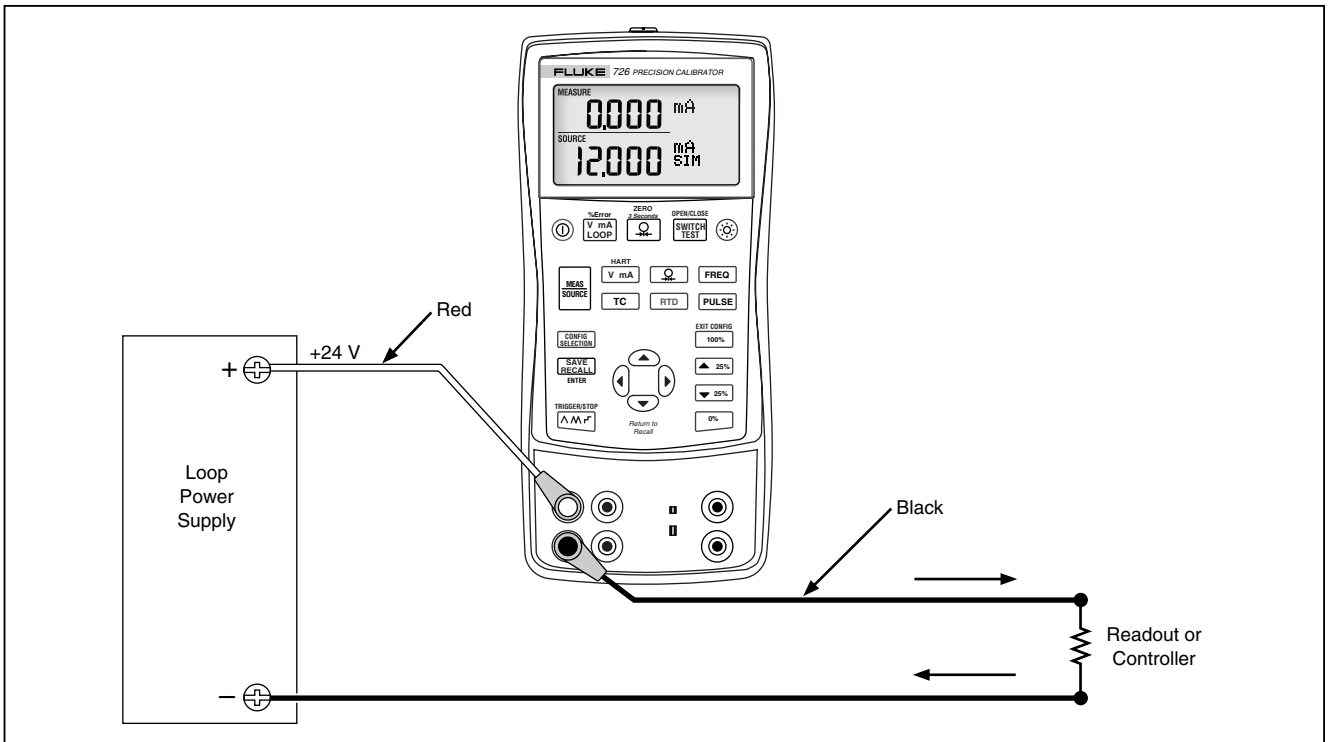


bec17f.eps

**Figure 14. Connections for Simulating a 4- to 20-mA Transmitter**

## Sourcing Other Electrical Parameters

Volts, ohms, and frequency are also sourced and shown in the lower display.

To select an electrical sourcing function, proceed as follows:

1. Connect the test leads as shown in Figure 15, depending on the source function.
2. If necessary, press [MEAS SOURCE] for SOURCE mode.
3. Press [V mA] for dc voltage, or [FREQ] for frequency, and [RTD] for resistance.
4. Enter the desired output value by pressing ⌃ and ⌄ keys. Press ◂ and ▸ to select a different digit to change.

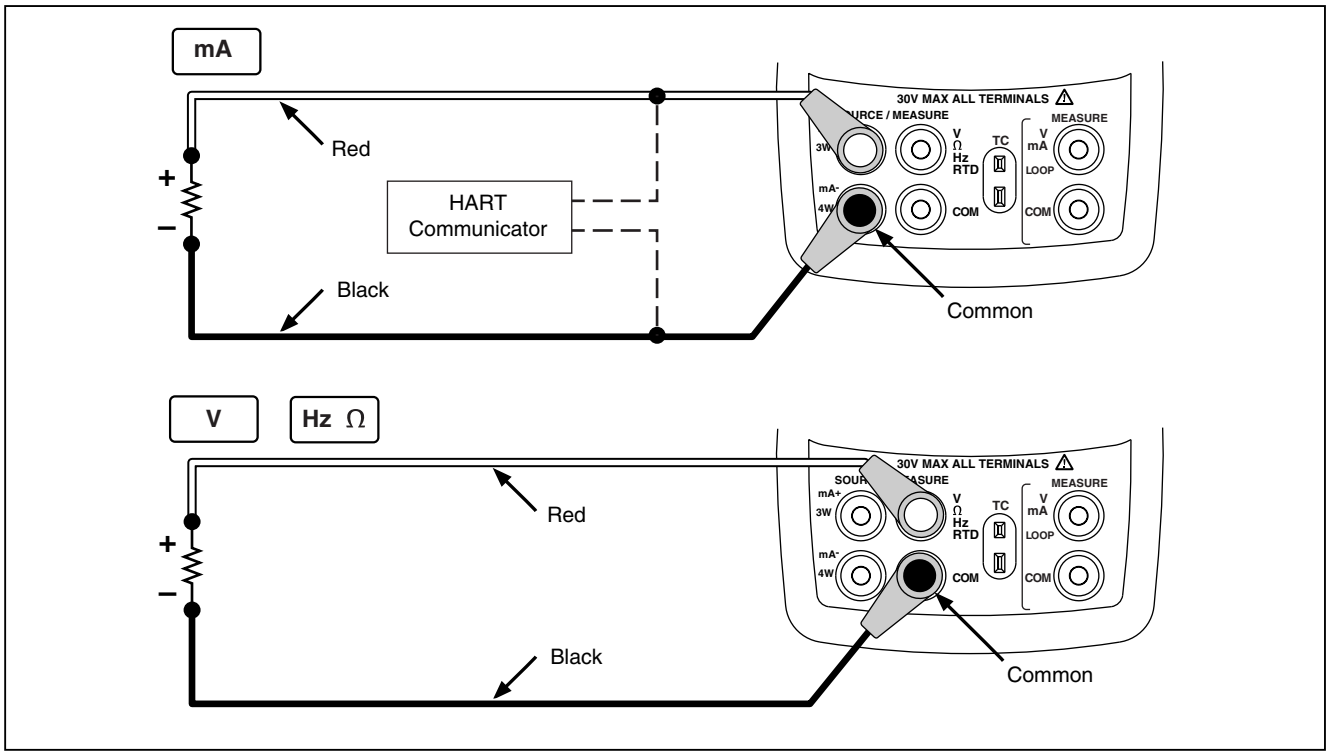


bec16f.eps

**Figure 15. Electrical Sourcing Connections**

## Simulating Thermocouples

Connect the Calibrator TC input/output to the instrument under test with the thermocouple wire and the appropriate thermocouple mini-connector (polarized thermocouple plug with flat, in-line blades spaced 7.9 mm [0.312 in] center to center). *One pin is wider than the other.*

### ⚠ Caution

**Do not try to force a miniplug into the wrong polarization.**

Figure 16 shows this connection. Proceed as follows to simulate a thermocouple:

1. Attach the thermocouple leads to the appropriate TC miniplug, then to the TC input/output as shown in Figure 16.
2. If necessary, press [MEAS SOURCE] for SOURCE mode.
3. Press [TC] for the TC display. If desired, continue pressing this key to select the desired thermocouple type.
4. Enter the temperature you want by pressing ⊼ and ⊽ keys. Press ⊲ and ⊳ to select a different digit to edit.

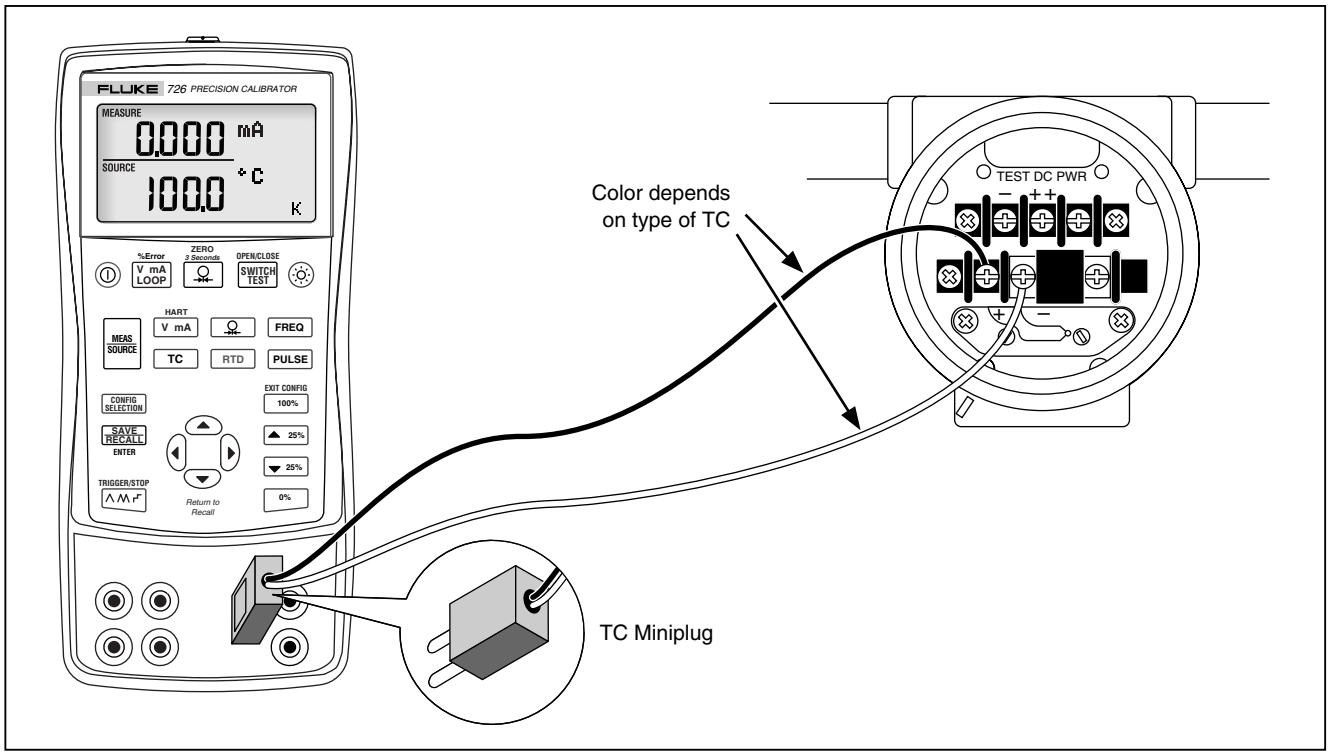


bec20f.eps

**Figure 16. Connections for Simulating a Thermocouple**

## Simulating RTDs

Connect the Calibrator to the instrument under test as shown in Figure 17. Proceed as follows to simulate an RTD:

1. If necessary, press [MEAS SOURCE] for SOURCE mode.
2. Press [RTD] for the RTD display.

*Note*

*Use the 3W and 4W terminals for measurement only, not for simulation. The Calibrator simulates a 2-wire RTD at its front panel. To connect to a 3-wire or 4-wire transmitter, use the stacking cables to provide the extra wires. See Figure 17.*

3. Enter the desired temperature by pressing ⊕ and ⊖. Press ◀ and ▶ to select a different digit to edit.
4. If the 726 display indicates ExI HI, the excitation current from your device under test exceeds the limits of the 726.

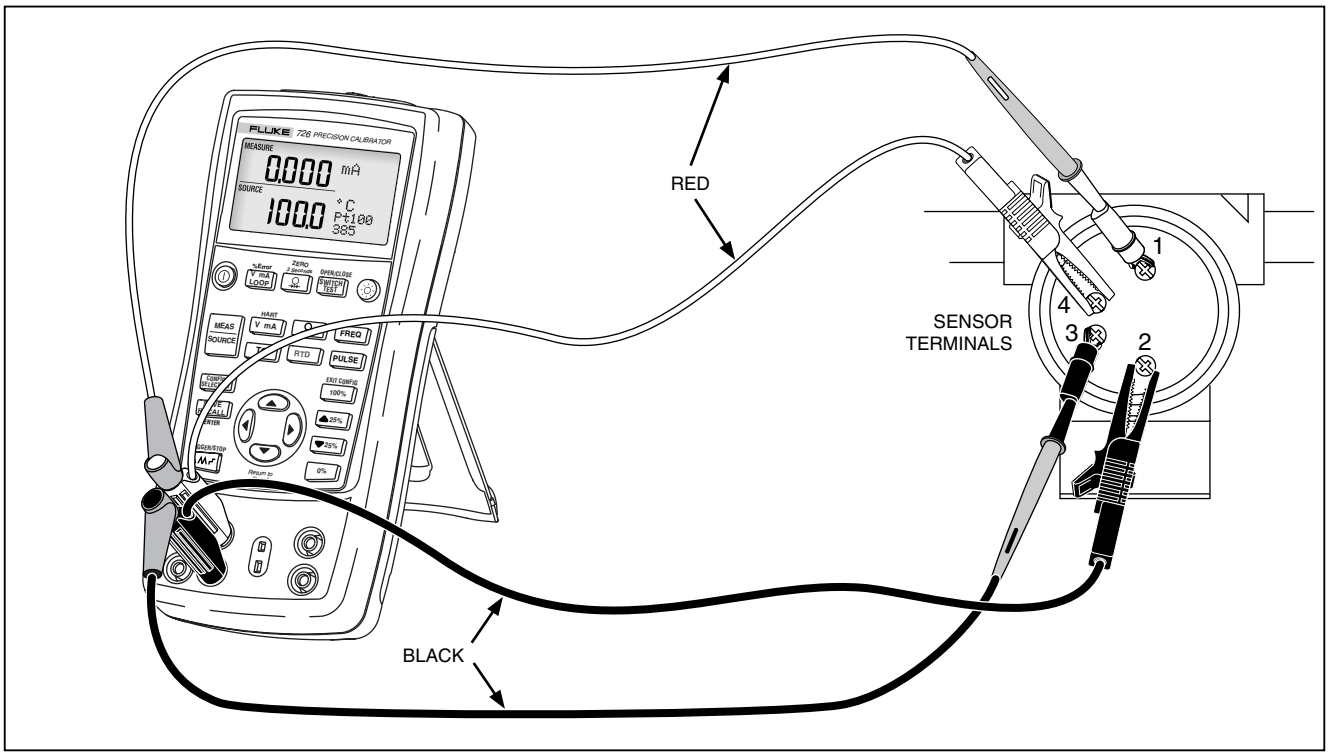


bec40f.eps

**Figure 17. Connections for Simulating 3- and 4-Wire RTD**

## *Sourcing Pressure*

The Calibrator sources pressure by measuring pressure supplied by a pump or other sources, and displaying the pressure in the SOURCE field. Figure 18 shows how to connect a pump to a Fluke pressure module which makes it a calibrated source.

Many ranges and types of pressure modules are available from Fluke, see “Accessories”. Before using a pressure module, read its instruction sheet. The modules vary in use, media, and accuracy.

Attach the appropriate pressure module for the process pressure to be tested.

Proceed as follows to source pressure:

### ⚠Warning

**To avoid a violent release of pressure in a pressurized system, shut off the valve and slowly bleed off the pressure before attaching the pressure module to the pressure line.**

### ⚠Caution

**To avoid mechanically damaging the pressure module:**

- **Never apply more than 10 ft.-lb. (13.5 Nm) of torque between the pressure module fittings, or between the fittings and the body of the module. Always apply appropriate torque between the pressure module fitting and connecting fittings or adapters.**
- **Never apply pressure above the rated maximum printed on the pressure module.**
- **Use the pressure module only with specified materials. Refer to the printing on the pressure module or the pressure module instruction sheet for the acceptable material compatibility.**

1. Connect a pressure module to the Calibrator as shown in Figure 18. The threads on the pressure modules accept standard ¼ NPT pipe fittings. Use the supplied ¼ NPT to ¼ ISO adapter if necessary.
2. Press [⚲] (lower display). The Calibrator automatically senses which pressure module is attached and sets its range accordingly.
3. Zero the pressure module as described in the module's Instruction Sheet. Modules vary in zeroing procedures depending on module type.
4. Pressurize the pressure line with the pressure source to the desired level as shown on the display.

   If desired, continue pressing [⚲] to change pressure display units to psi, mmHg, inHg, $cmH_2O$@4 °C, $cmH_2O$@20 °C, $inH_2O$@4 °C, $inH_2O$@20 °C, $inH_2O$@60 °C, mbar, bar, $kg/cm^2$, or kPa.

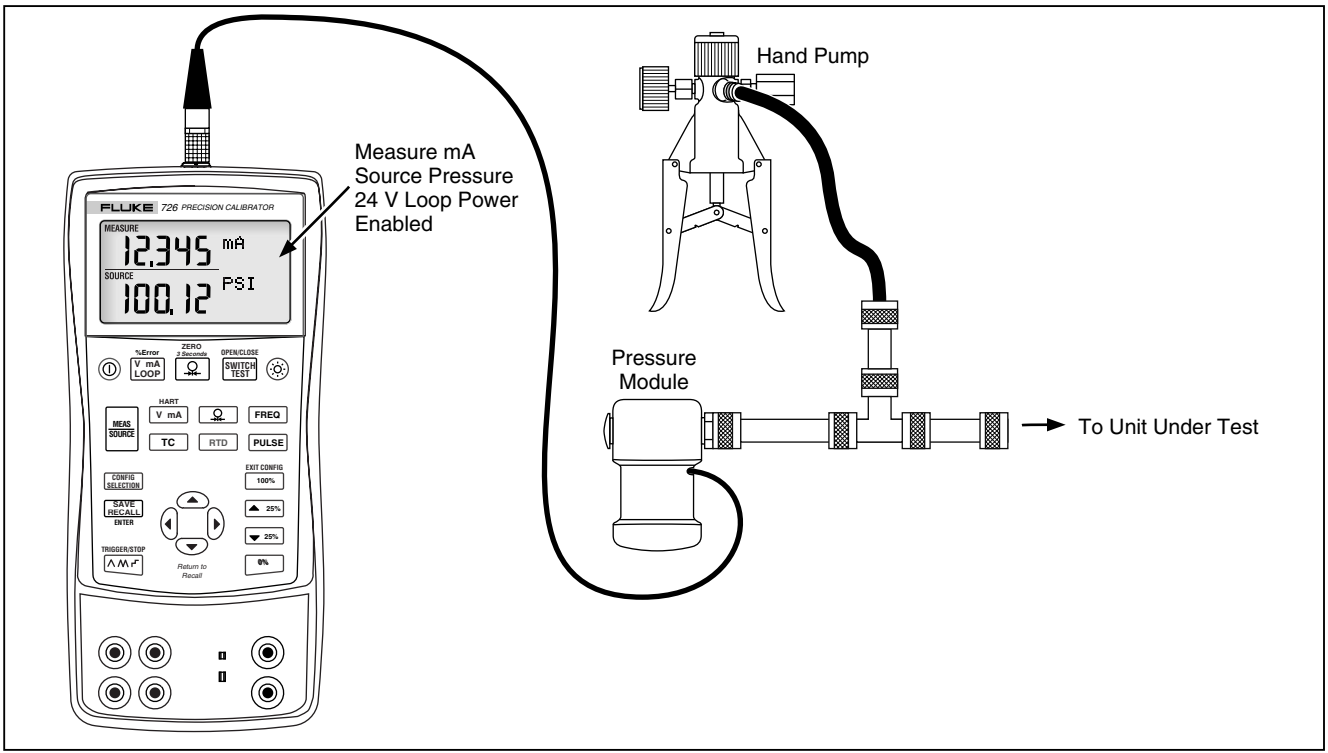


bec47f.eps

**Figure 18. Connections for Sourcing Pressure**

## Setting 0 % and 100 % Output Parameters

For current output, the Calibrator assumes that 0 % corresponds to 4 mA and 100 % corresponds to 20 mA. For other output parameters, 0 % and 100 % points must be set before using the step and ramp functions. Proceed as follows:

1. If necessary, press [MEAS SOURCE] for SOURCE mode.
2. Select the desired source function and use the arrow keys to enter the value. This example is temperature source using 100 °C and 300 °C values for source.
3. Enter 100 °C then press and hold [0%] to store the value.
4. Enter 300 °C then press and hold [100%] to store the value.

   This setting can now be used for the following:

   - Manually stepping an output in 25 % increments.
   - Switch between the 0 and 100 % span points by momentarily pushing [0%] or [100%].

## % Error Functionality

Percentage Error is available for every range on the lower display. The calculation is based on a mA percentage deviation from the value measured on the upper display to the value sourced on the lower display 0 % mA and 100 % mA are fixed to 4 and 20 mA. 0 % and 100 % for the lower display are set in source using [0%] and [100%], refer to “Setting 0% and 100% Output Parameters”.

## Stepping and Ramping the Output

Two additional features are available for adjusting the value of source functions:

- Stepping the output manually with the [▲25%] and [▼25%] keys, or in automatic mode
- Ramping the output

Stepping and ramping apply to all functions except pressure, which requires use of an external pressure source.

### Manually Stepping the mA Output

To manually step current output:

- Use [▲25%] or [▼25%] to step the current up or down in 25 % steps.
- Touch either [0%] to go to 0 %, or [100%] to go to 100 %.

### Auto Ramping the Output

Auto ramping can continuously apply a varying stimulus from the Calibrator to a transmitter, while your hands remain free to test the response of the transmitter.

When [⋀⋀⋀] is pressed, the Calibrator produces a repeating 0 % - 100 % - 0 % ramp in a choice of three ramp waveforms:

- ⋀ 0 % - 100 % - 0 % 40-second smooth ramp
- ⋀⋀ 0 % - 100 % - 0 % 15-second smooth ramp
- ⌐⌐ 0 % - 100 % - 0 % Stair-step ramp in 25 % steps, pausing 5 seconds at each step. Steps are listed in Table 7.

To exit ramping, press any button.

**Table 7. mA Step Values**

| Step | 4 to 20 mA |
|---|---|
| 0 % | 4.000 |
| 25 % | 8.000 |
| 50 % | 12.000 |
| 75 % | 16.000 |
| 100 % | 20.000 |

## Storing and Recalling Setups

Up to eight settings can be stored in a nonvolatile memory to recall for later use. A low battery condition or a battery change does not jeopardize the stored settings.

### Store a Setup

To store a setup:

1. Create the desired setup.
2. Push [SAVE RECALL]. The right side of the display changes to show SAVE SETUP and SAVE DATA.
3. Push [SAVE RECALL] to select SAVE SETUP.
4. Push ◀ or ▶ to select the desired memory location (at the top of the LCD).
5. Push [SAVE RECALL] to enter the setup.

### Recall a Setup

To recall a setup:

1. Push [SAVE RECALL] twice. The right side of the display changes to show RECL SETUP and RECALL DATA.
2. Push [SAVE RECALL] again to RECL SETUP.
3. Push (▸) to select the desired memory location (at the top of the LCD).
4. Push [SAVE RECALL] to recall the setup from the proper memory location.

## Storing and Recalling Data

Up to 40 data samples can be stored in a nonvolatile memory to be recalled for later use. A low battery condition or a battery change does not jeopardize the stored settings.

### Storing Data

To store measurement data, use the following procedure, refer to Figure 19.

1. Take the desired measurement.
2. Push [SAVE RECALL]. The right side of the display changes to show SAVE SETUP and SAVE DATA.
3. Press (▾) to select SAVE DATA.
4. Push [SAVE RECALL] again. The open data point (bottom right of the display) flashes.
5. Use (◂) and (▸) to change the data point location (1-8).
6. Push [SAVE RECALL] to store the measurement and return the unit to the measurement mode. Figure 19 shows a reading stored in memory location 3, data point 1.

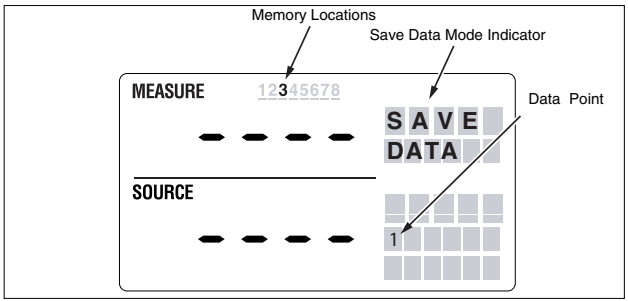


bec46f.eps

**Figure 19. SAVE DATA Menu Showing Measurement Memory Location 3, 1**

## Recall Data

To recall data:

1. Push SAVE RECALL twice. The right side of the display changes to show RECL SETUP and RECALL DATA.
2. Push ▼ to highlight RECL DATA (bottom right of the display).
3. Push SAVE RECALL.
4. Push ▶ to choose the desired memory location (top of the display).

   The data saved in that first memory location now appears. There can be different measurements stored (1-5) for each memory location (1-8).
5. Push ◀ or ▶ to select the correct data location (bottom right of display).
6. Push SAVE RECALL to recall the data stored in that location.
7. Push ▼ to return to the same RECALL DATA location to see the next saved measurement, 2 of 5 for example.

## Pulse Train Source/Read

Pulse Train Source/Read counts input pulses or sources output pulses. Use the configuration menus to set the frequency and output voltage. Refer to “Configuration Menus” earlier in this manual. The number of counts is set through the main display and cannot be changed while sourcing pulses. ∧∧ works as a trigger/stop key in this mode since ramping or stepping during a pulse train is not relevant.

## Calibrating a Transmitter

Use the measurement (upper display) and source (lower display) modes to calibrate a transmitter. This section applies to all but pressure transmitters. The following example shows how to calibrate a temperature transmitter. Use the following steps to calibrate a transmitter:

1. Connect the Calibrator to the instrument under test as shown in Figure 20.
2. Press [V mA LOOP] for current (upper display). If required, press [V mA LOOP] again to activate loop power.
3. Press [TC] (lower display). If desired, continue pressing this key to select the desired thermocouple type.
4. If necessary, press [MEAS SOURCE] for SOURCE mode.
5. Set the zero and span parameters by pressing ⌃ and ⌄. Enter these parameters by pressing and holding [0%] and [100%]. For more information on setting parameters, see “Setting 0 % and 100 % Output Parameters”.
6. Perform test checks at 0-25-50-75-100 % points by pressing [▲25%] or [▼25%]. Adjust the transmitter as necessary.

*Note*

*When HART resistor mode is selected, the 250 Ω resistor is turned on both mA channels.*

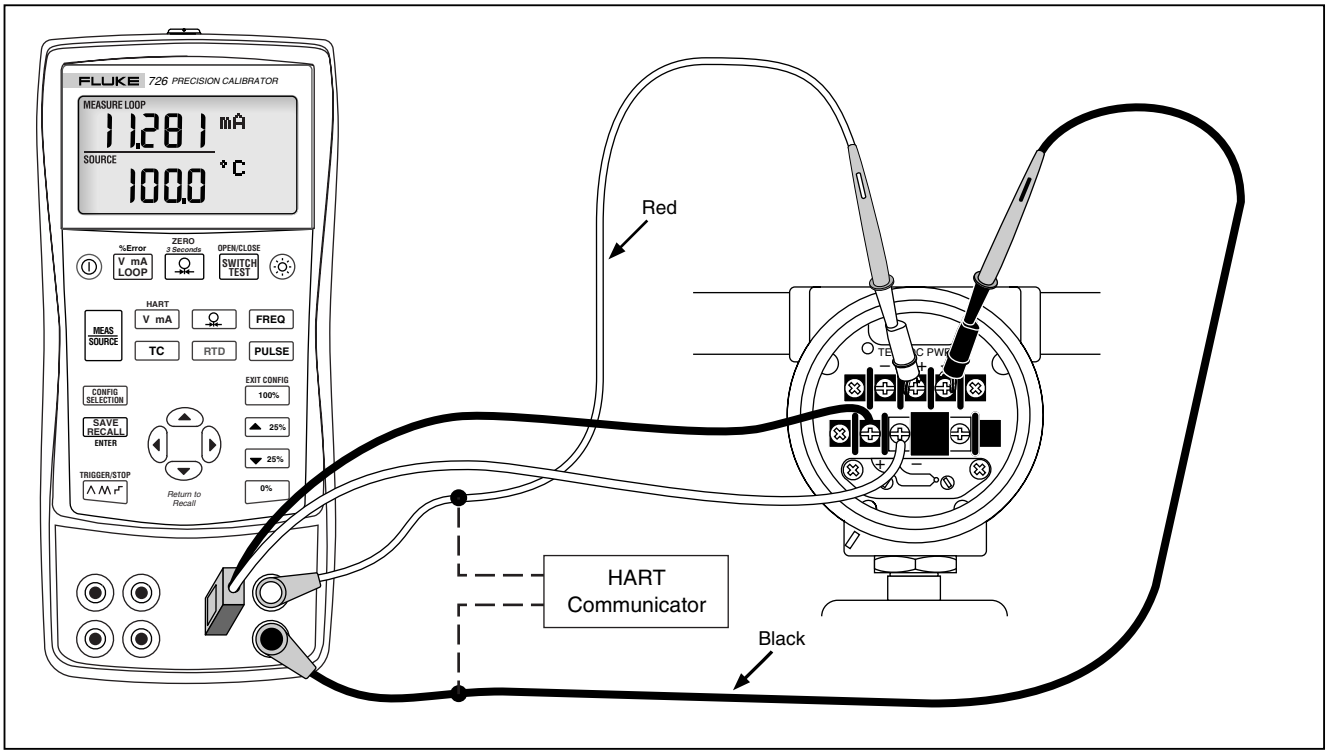


bec44f.eps

**Figure 20. Calibrating a Thermocouple Transmitter**

## Calibrating a Pressure Transmitter

The following steps explain calibrating a pressure transmitter.

1. Connect the Calibrator to the instrument under test as shown in Figure 21.
2. Press [V mA LOOP] for current (upper display). If required, press [V mA LOOP] again to activate loop power.
3. Press [Ω] (lower display).
4. If necessary, press [MEAS SOURCE] for SOURCE mode.
5. Zero the pressure module.
6. Perform checks at 0 % and 100 % of span and adjust the transmitter as necessary.

*Note*

*When HART resistor mode is selected, the 250 Ω resistor is turned on both mA channels.*

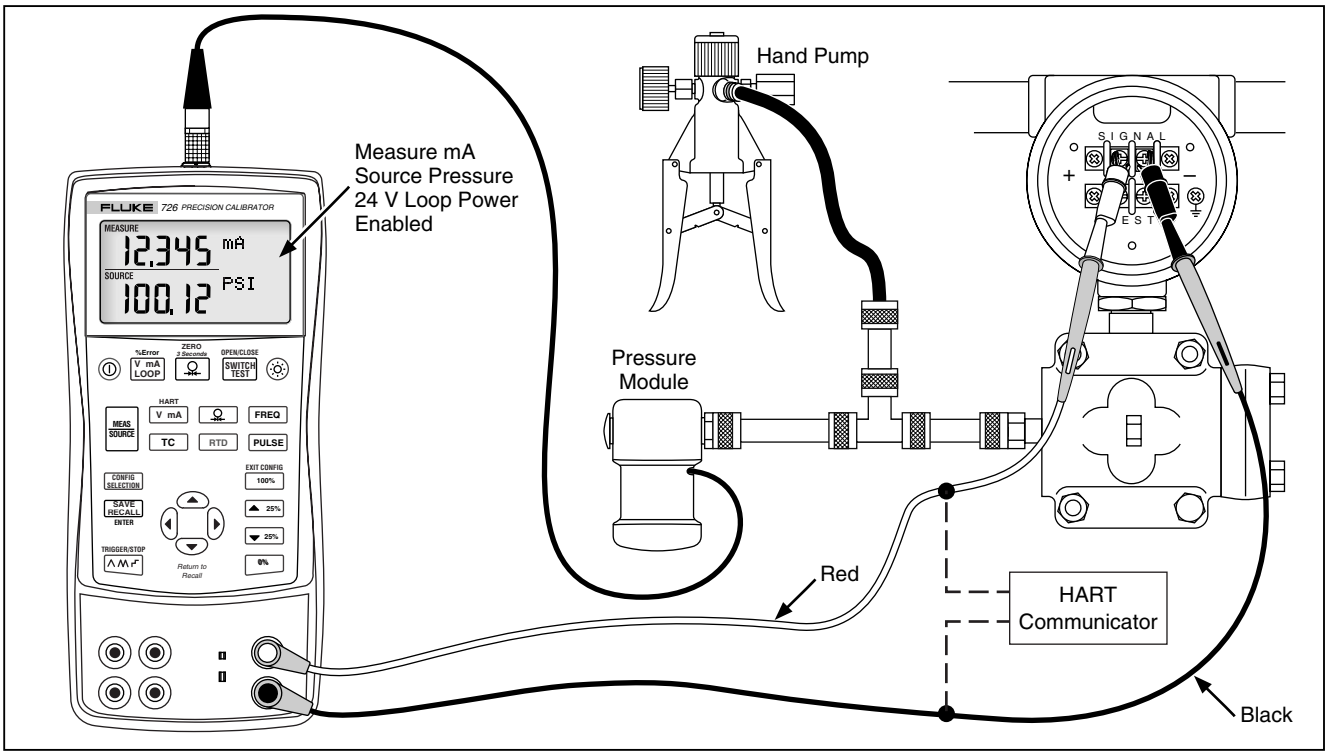


bec34f.eps

**Figure 21. Calibrating a Pressure-to-Current (P/I) Transmitter**

## Calibrating an I/P Device

The following steps explain how to calibrate a device that controls pressure. Proceed as follows:

1. Connect the test leads to the instrument under test as shown in Figure 22. The connections simulate a current-to-pressure transmitter and measures the corresponding output pressure.
2. Press [⚲] (upper display).
3. Press [V mA] for sourcing current (lower display).
4. If necessary, press [MEAS SOURCE] for SOURCE mode.
5. Enter the desired current by pressing ⌃ and ⌄. Press ◂ and ▸ to select different digits.

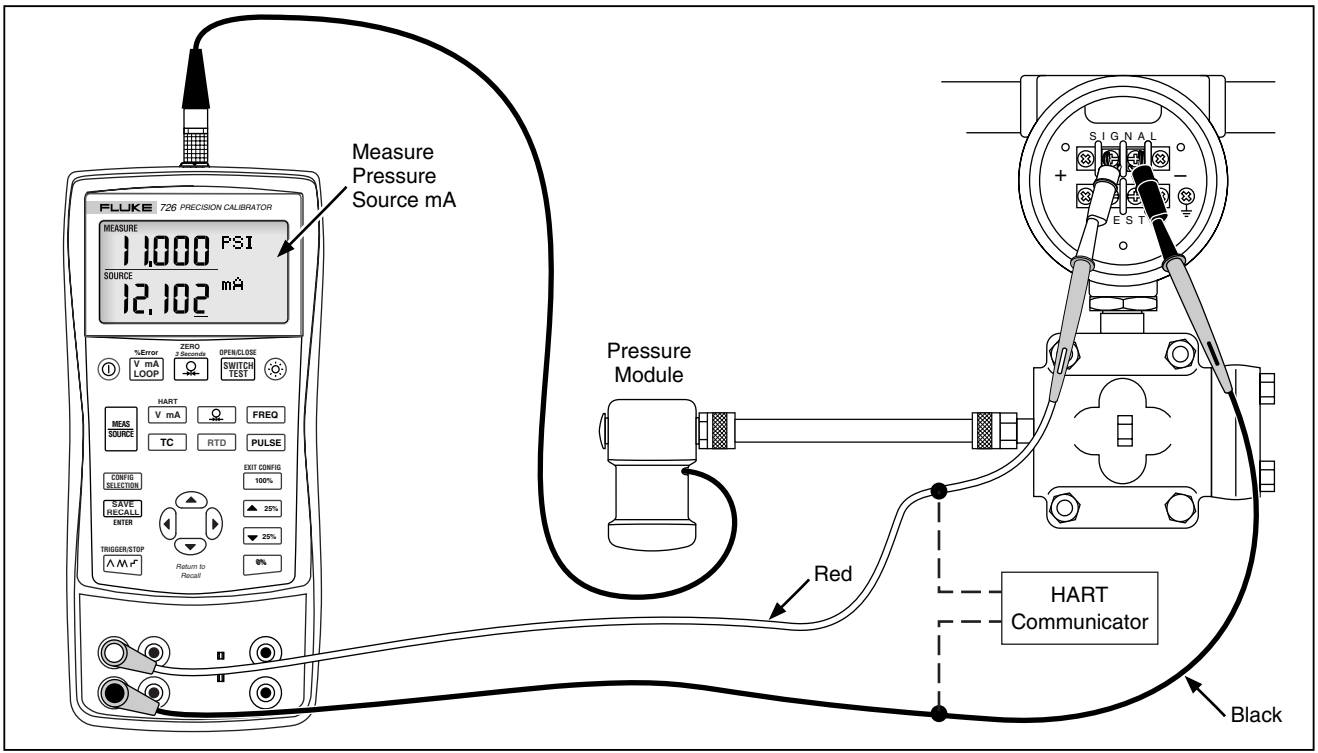


bec28f.eps

**Figure 22. Calibrating a Current-to-Pressure (I/P) Transmitter**

## Pressure Switch Test

*Note*

*This example uses a normally-closed switch. The procedure is the same for an open switch but the display reads OPEN instead of CLOSE.*

To perform a switch test:

1. Connect the Calibrator mA and COM terminals to the switch using the pressure switch terminals and connect the pump to the pressure switch. The polarity of the terminals does not matter.
2. Make sure the vent on the pump is open and, if necessary, zero the Calibrator. Close the vent after zeroing the Calibrator.
3. Press [SWITCH TEST] to enter switch-test mode. The upper display indicates the applied pressure. CLOSE is displayed to the right of the pressure reading to indicate closed contacts.
4. Slowly apply pressure with the pump until the switch opens.

*Note*

*Pressure the device slowly to ensure accurate readings. Run the test several times to confirm repeatability.*

OPEN displays once the switch is open. Slowly bleed the pump until the pressure switch closes. RECALL appears on the display.

5. Press [SWITCH TEST] to read the pressure values for when the switch opened, for when it closed, and for the deadband.
6. Hold [SWITCH TEST] for three seconds to restart the test. Press [Ω] OR [V mA LOOP] to exit the switch test.

## Testing an Output Device

Use the source functions to test and calibrate actuators, recording, and indicating devices. Proceed as follows:

1. Connect the test leads to the instrument under test as shown in Figure 23.
2. Press [V mA] for current or dc voltage, or [FREQ] for frequency or resistance (lower display).
3. If necessary, press [MEAS SOURCE] for SOURCE mode.

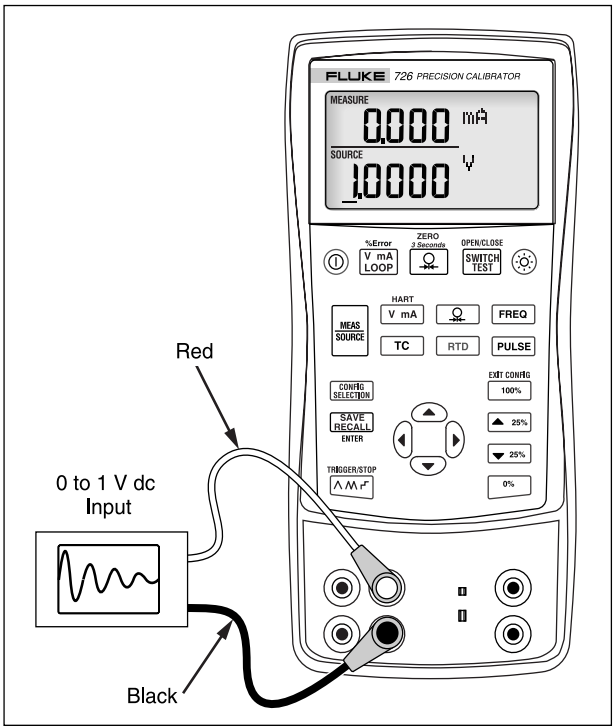


bec25f.eps

**Figure 23. Calibrating a Chart Recorder**

## Remote Control Commands

The Calibrator may be remotely controlled from a PC running a terminal emulator program. The remote control commands give access to all capabilities of the Calibrator with the exception of pressure measurement.

See the Fluke Web Site for the 726 Remote Programming application note at www.fluke.com/processtools

## HART® Functionality

The Calibrator has a user-selectable 250 Ω HART to facilitate use with HART communication devices. The resistor can be switched in or out using config selection menus. Use a HART communicator when measuring mA with loop power or sourcing mA.

# Maintenance

## Replacing the Batteries

**⚠⚠Warning**

**To avoid false readings, which could lead to possible electric shock or personal injury, replace the batteries as soon as the battery indicator (▬) appears.**

Figure 24 shows you how to replace the batteries.

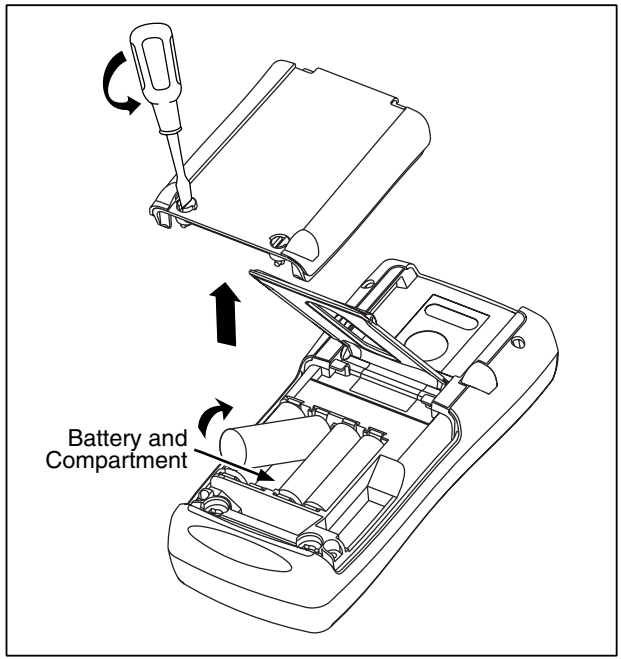


bec38f.eps

**Figure 24. Replacing the Batteries**

## *Cleaning the Calibrator*

**⚠Caution**

**To avoid damaging the plastic lens and case, do not use solvents or abrasive cleansers.**

Clean the Calibrator and pressure modules with a soft cloth dampened with water or water and mild soap.

## *Service Center Calibration or Repair*

Calibration, repairs, or servicing not covered in this manual should be performed only by qualified service personnel. If the Calibrator fails, check the batteries first, and replace them if needed.

To locate an authorized service center, refer to “Contacting Fluke” at the beginning of the manual.

## *Replacement Parts*

Table 8 lists the part number of each replaceable part. Refer to Figure 25.

**Table 8. Replacement Parts**

| Item | Description | PN | Qty. |
|---|---|---|---|
| 1 | AA alkaline batteries | 376756 | 4 |
| 2 | Case screws | 832246 | 4 |
| 3 | Battery door | 664250 | 1 |
| 4 | Accessory mount | 658424 | 1 |
| 5 | Tilt stand | 659026 | 1 |
| 6 | Battery door 1/4-turn fasteners | 948609 | 2 |
| 7 | TL75 series test leads | 855742 | 1 |
| 8 | Test lead, red<br>Test lead, black | 688051<br>688066 | 1<br>1 |
| 9 | *726 Product Overview Manual* | 2441588 | 1 |
| 10 | AC72 alligator clip, red<br>AC72 alligator clip, black | 1670641<br>1670652 | 1<br>1 |
| 11 | *725/726 CD ROM*, contains User Manual | 1549615 | 1 |

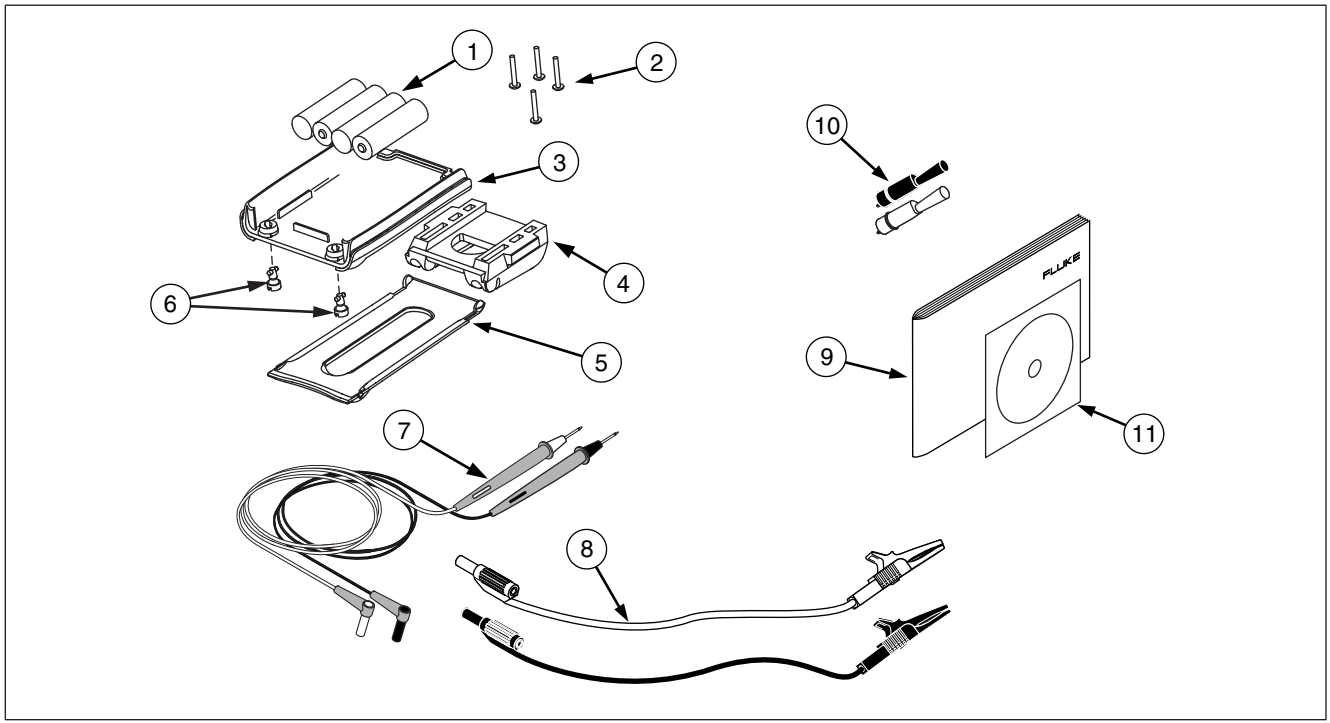


bec45f.eps

**Figure 25. Replacement Parts**

## Accessories

For more information about these accessories, contact your Fluke representative. Fluke Pressure Module Compatibility is listed in Table 9. Pressure Modules and Fluke model numbers are listed in Table 10. Contact your Fluke representative about new pressure modules not listed here.

- 700HTP 0 to 10,000 PSI Pump
- 700PTP -11.6 to 360 PSI Pump
- 700TC1 and 700TC2 Thermocouple Mini-plug Kits

## External Fluke Pressure Module Compatibility

The output of Fluke 700P pressure modules can cause the 726's 5 digit display to overflow, or else produce values that are too low to be read if inappropriate units are selected. This is prevented by displaying OL on the display per the following table.

**Table 9. Fluke Pressure Module Compatibility**

| Pressure Unit | Module Compatibility |
|---|---|
| Psi | Available on all pressure ranges |
| In. $H_20$ | All ranges through 3000 psi |
| cm. $H_20$ | All ranges through 1000 psi |
| Bar | 15 psi and above |
| Mbar | All ranges through 1000 psi |
| KPa | Available on all pressure ranges |
| In.Hg. | Available on all pressure ranges |
| mm. Hg | All ranges through 1000 psi |
| $Kg/cm^2$ | 15 psi and above |

**Table 10. Pressure Modules**

| Fluke Model Number | Range | Type and Media |
|---|---|---|
| Fluke-700P00 | 0 to 1” $H_2O$ | differential, dry |
| Fluke-700P01 | 0 to 10” $H_2O$ | differential, dry |
| Fluke-700P02 | 0 to 1 psi | differential, dry |
| Fluke-700P22 | 0 to 1 psi | differential, wet |
| Fluke-700P03 | 0 to 5 psi | differential, dry |
| Fluke-700P23 | 0 to 5 psi | differential, wet |
| Fluke-700P04 | 0 to 15 psi | differential, dry |
| Fluke-700P24 | 0 to 15 psi | differential, wet |
| Fluke-700P05 | 0 to 30 psi | gage, wet |
| Fluke-700P06 | 0 to 100 psi | gage, wet |
| Fluke-700P27 | 0 to 300 psi | gage, wet |
| Fluke-700P07 | 0 to 500 psi | gage, wet |
| Fluke-700P08 | 0 to 1,000 psi | gage, wet |
| Fluke-700P09 | 0 to 1,500 psi | gage, wet |

**Table 10. Pressure Modules (cont.)**

| Fluke Model Number | Range | Type and Media |
|---|---|---|
| Fluke-700P29 | 0 to 3,000 psi | gage, wet |
| Fluke-700P30 | 0 to 5,000 psi | gage, wet |
| Fluke-700P31 | 0 to 10,000 psi | gage, wet |
| Fluke-700PA3 | 0 to 5 psi | absolute, wet |
| Fluke-700PA4 | 0 to 15 psi | absolute, wet |
| Fluke-700PA5 | 0 to 30 psi | absolute, wet |
| Fluke-700PA6 | 0 to 100 psi | absolute, wet |
| Fluke-700PV3 | 0 to -5 psi | vacuum, dry |
| Fluke-700PV4 | 0 to -15 psi | vacuum, dry |
| Fluke-700PD2 | ±1 psi | dual range, dry |
| Fluke-700PD3 | ±5 psi | dual range, dry |
| Fluke-700PD4 | ±15 psi | dual range, dry |
| Fluke-700PD5 | –15/+30 psi | dual range, wet |
| Fluke-700PD6 | –15/+100 psi | dual range, wet |
| Fluke-700PD7 | –15/+200 psi | dual range, wet |

# Specifications

Specifications are based on a one year calibration cycle and apply from +18 °C to +28 °C unless stated otherwise. All specifications assume a five-minute warmup period.

## DC Voltage Measurement and Source

| Range | Minimum | Maximum | Accuracy, (% of Reading + Floor) |
|---|---|---|---|
| 30 V (upper display) | 0.000 | 30.000 | 0.010 % + 2 mV |
| 20 V (lower display) | 0.000 | 20.000 | 0.010 % + 2 mV |
| 20 V (Source) | 0.000 | 20.000 | 0.010 % + 2 mV |
| 100 mV (Source) | 0.000 | 100.000 | 0.010 % + 10 µV |
| 90 mV (Read) | 0.000 | 90.000 | 0.010 % + 10 µV |
| Maximum current output in voltage ranges is 1 mA with an output impedance of ≤ 1 Ω | | | |

## DC mA Measurement and Source

| Range | Minimum | Maximum | Accuracy, (% of Reading + Floor) |
|---|---|---|---|
| mA Read (Upper Display) | 0.000 | 24.000 | 0.010 % + 2 µA |
| mA Read (Lower Display) | 0.000 | 24.000 | 0.010 % + 2 µA |
| mA Source | 0.000 | 24.000 | 0.010 % + 2 µA |
| Maximum load on, mA source is 1 kΩ. With the HART resistor on, maximum load is 750 Ω.<br>Voltage input range on simulate mode is 5 to 30 V | | | |

## Ohms Measurement

| Ohms Range | Minimum | Maximum | Accuracy (% of Reading + Floor) |
|---|---|---|---|
| Ohms Read (low) | 0.00 | 400.00 | 0.015 % + 0.05 Ω |
| Ohms Read (high) | 401.0 | 4000.0 | 0.015 % + 0.5 Ω |

## Ohms Source

| Ohms Range | Minimum | Maximum | Excitation Current from Measurement Device | Accuracy (% of Reading + Floor) |
|---|---|---|---|---|
| Ohms Source (low) | 5.0 | 400.0 | 0.1 to 0.5 mA | 0.015 % + 0.1 Ω |
| | 5.0 | 400.0 | 0.5 to 3 mA | 0.015 % + 0.05 Ω |
| Ohms Source (high) | 400 | 1500 | 0.05 to 0.8 mA | 0.015 % + 0.5 Ω |
| | 1500 | 4000 | 0.05 to 0.4 mA | 0.015 % + 0.5 Ω |
| Unit is compatible with smart transmitters and PLCs.<br>Frequency response is ≤ 5 mS | | | | |

## Frequency Measurement

| Range | Minimum | Maximum | Accuracy (% of Reading + Floor) |
|---|---|---|---|
| CPM Read | 2.0 | 1000.0 | 0.05 % + 0.1 CPM |
| Hz Read | 1.0 | 1000.0 | 0.05 % + 0.1 Hz |
| KHz Read | 1.00 | 15.00 | 0.05 % + 0.01 KHz |

## Frequency Source

| Range | Minimum | Maximum | Accuracy |
|---|---|---|---|
| CPM Source | 2.0 | 1000 | 0.05 % |
| Hz Source | 1.0 | 1000.0 | 0.05 % |
| KHz Source | 1.0 | 10.00 | 0.25 % |
| | 10.00 | 15.00 | 0.50 % |

## Temperature, Thermocouples

| Type | Minimum | Maximum | CJC ON Accuracy | CJC OFF Accuracy |
|---|---|---|---|---|
| J | -210 | 0.0 | 0.6 | 0.4 |
| | 0.0 | 800 | 0.4 | 0.2 |
| | 800 | 1200 | 0.5 | 0.3 |
| K | -200 | 0.0 | 0.8 | 0.6 |
| | 0.0 | 1000 | 0.5 | 0.3 |
| | 1000 | 1372 | 0.7 | 0.5 |
| T | -250 | 0.0 | 0.8 | 0.6 |
| | 0.0 | 400 | 0.4 | 0.2 |
| E | -250 | -100 | 0.8 | 0.6 |
| | -100 | 1000 | 0.4 | 0.4 |
| R | -20 | 0.0 | 2.0 | 1.8 |
| | 0.0 | 1767 | 1.4 | 1.2 |
| CJC error outside of 23 ± 5 °C is 0.05 °C / °C | | | | |

| Type | Minimum | Maximum | CJC ON Accuracy | CJC OFF Accuracy |
|---|---|---|---|---|
| S | -20 | 0.0 | 2.0 | 1.8 |
| | 0.0 | 1767 | 1.4 | 1.2 |
| B | 600 | 800 | 1.4 | 1.2 |
| | 800 | 1000 | 1.5 | 1.3 |
| | 1000 | 1820 | 1.7 | 1.5 |
| C | 0.0 | 1000 | 0.8 | 0.6 |
| | 1000 | 2316 | 2.5 | 2.3 |
| L | -200 | 0.0 | 0.45 | 0.25 |
| | 0.0 | 900 | 0.4 | 0.2 |
| U | -200 | 0.0 | 0.7 | 0.5 |
| | 0.0 | 600 | 0.45 | 0.25 |
| N | -200 | 0.0 | 1.0 | 0.8 |
| | 0.0 | 1300 | 0.6 | 0.4 |
| XK | -200 | 800 | 0.4 | 0.2 |
| BP | 0.0 | 800 | 1.1 | 0.9 |
| | 800 | 2500 | 2.3 | 2.1 |
| | | | **Range** | **Accuracy** |
| Thermocouple in mV read | | | -10 °C to 75 °C | 0.015 % + 10 µV (% of Reading + Floor) |
| Thermocouple in mV source | | | -10 °C to 75 °C | 0.015 % + 10 µV (% of Reading + Floor) |
| Maximum current output in voltage ranges is 1 mA with an output impedance of ≤ 1 Ω | | | | |

## RTD Accuracy (Read and Source) (ITS-90)

| Range | Minimum | Maximum | Accuracy |
|---|---|---|---|
| Ni120 (672) | -80.00 | 260.00 | 0.15 |
| Pt100 (385) | -200.00 | 100.00 | 0.15 |
| | 100.00 | 300.00 | 0.25 |
| | 300.00 | 600.00 | 0.35 |
| | 600.00 | 800.00 | 0.45 |
| Pt100 (3926) | -200.00 | 100.00 | 0.15 |
| | 100.00 | 300.00 | 0.25 |
| | 300.00 | 630.00 | 0.35 |
| Pt100 (3916) | -200.00 | 100.00 | 0.15 |
| | 100.00 | 300.00 | 0.25 |
| | 300.00 | 630.00 | 0.35 |
| Pt200 (385) | -200.00 | 100.00 | 0.75 |
| | 100.00 | 300.00 | 0.85 |
| | 300.00 | 630.00 | 0.95 |
| Pt500 (385) | -200.00 | 100.00 | 0.35 |
| | 100.00 | 300.00 | 0.45 |
| | 300.00 | 630.00 | 0.55 |
| Pt1000 (385) | -200.00 | 100.00 | 0.15 |
| | 100.00 | 300.00 | 0.25 |
| | 300.00 | 630.00 | 0.35 |
| CU10 | -10.00 | 250.00 | 1.8 |

Notes: Read Accuracy is based on 4-wire input. For 3-wire input, add ± 0.05 Ω assuming all three RTD leads are matched.
Source Accuracy is based on 0.5 to 3.0 mA excitation current (0.1 mA for pt1000 range)

## *Loop Power Supply*

Voltage: 24 V
Maximum current: 22 mA
Short circuit protected.

## *Pulse Read and Pulse Source*

| Pulse | Min | Max | Accuracy | Frequency |
|---|---|---|---|---|
| **Source** | 1 | 10,000 | 1 Count | 2 CPM to 10 kHz |
| **Read** | | 100,000 | | |

## *Pressure Measurement*

| Range | Resolution | Accuracy | Units | Mode |
|---|---|---|---|---|
| Determined by pressure module | 5 digits | Determined by pressure module | psi, in$H_2O$@4 °C, in$H_2O$@20 °C, kPa, cm $H_2O$@4 °C, cm$H_2O$@20 °C, bar, mbar, kg/$cm_2$, mmHg, inHg | Pushing [Ω] for 3 seconds stores present pressure value as an offset and subtracts it from the displayed value |

## General Specifications

| | |
|---|---|
| Operating temperature | -10 °C to 50 °C |
| Storage temperature | - 20 °C to 70 °C |
| Stability | ± 0.005 % of range/°C outside of 23 ± 5 °C |
| Operating altitude | 3000 meters above mean sea level |
| Relative Humidity (% RH operating without condensation) | 90 % (10 to 30 °C)<br>75 % (30 to 40 °C)<br>45 % (40 to 50 °C)<br>35 % (50 to 55 °C)<br>uncontrolled < 10 °C |
| Vibration | Random, 2 g, 5 to 500 Hz |
| Safety | EN50082-1:1992 and EN55022: 1994 Class B Criteria A or B CSA C22.2 No 1010.1:1992 |
| Power requirements | 4 AA alkaline batteries |
| Protection Class | Pollution Degree II |
| Size | 96 x 200 x 47 mm. (3.75 x 7.9 x 1.86 in) |
| Weight | 650 gm (1 lb, 7 oz) |

# Index


## —0—

0% output parameter, setting, 41

## —1—

100% output parameter, setting, 41

## —4—

4 to 20 mA transmitter
  simulating, 30

## —A—

Accessories, 56
Auto ramping output, 42

## —B—

Battery, replacing, 53

## —C—

Calibration, 54
Celcius and Fahrenheit, 15
Cleaning calibrator, 54
Cold Junction Compensation (CJC), 15
Commands
  Remote Control, 52
configuration menus, 14
Connections
  for pressure sourcing, 39
Contact Information, 1

## —D—

Data
  Recall, 44
display
  contrast adjustment, 14
Display, 13

## —E—

Electrical parameters
  measurement, 20
  sourcing, 32

## —F—

frequency output voltage, 15

## —G—

Getting started, 16

## —H—

HART
configuration menu, 16

## —I—

I/P device, calibrating, 49
Input terminals, 8
Input/output terminals and connectors (table), 9

## —K—

Key functions (table), 11
Keys, 10

## —L—

loop power, 18
Loop power
simulating, 30

## —M—

Measure functions, summary (table), 2
Measure mode, 18
Measuring
pressure, 27
temperature with RTDs, 24
temperature with thermocouples, 21
menus
configuration, 14

## —O—

Output device, testing, 51
Output terminals, 8

## —P—

Parts list, 54
Percentage Error, 41
Pressure
Measurement, 27
Sourcing, 38
pressure modules
compatibility, 56
Pressure Modules
Compatibility, 56
Pressure modules available, 56
Pressure modules, zeroing, 28
Pressure Switch Test, 51
Pressure transmitter, calibrating, 47
Pulse Train Source/Read, 44

## —R—

ramping, 41
Recalling setups, 42, 43
Remote control commands, 52
Repair, 54
Resistance-Temperature Detectors
accepted types (table), 25
RTD
simulating, 36
RTD
measuring, 24
types, 24

## —S—

Safety information, 3
Saving
Measurements, 43
Servicing, 54
Setup
Recall, 43
recalling, 42, 43

storing, 42, 43
shut down mode, 15
Thermocouple, 34
Simulating
loop power, 30
RTD, 36
thermocouples, 34
Source functions, summary (table), 2
Source mode, 30
Sourcing
4 to 20 mA, 30
electrical parameters, 32
pressure, 38
thermocouples, 34
Specifications, 59
Standard equipment, 3
stepping, 41
Stepping output, 42
Storing setups, 42, 43
symbols, 7

## —T—

Temperature
measuring with RTD, 24
measuring with thermocouple, 21
Terminals
input, 8
output, 8
Thermocouple
measuring, 21
measuring temperature, 21
sourcing, 34
types, 21
thermocouples
accepted types, 22
Transmitter
4 to 20 mA, simulating, 30
Transmitter, calibrating, 45

## —V—

voltage to voltage test, 16

## —Z—

Zeroing pressure modules, 28