74AHC541; 74AHCT541

Octal buffer/line driver; 3-state

Rev. 4 — 14 April 2020 Product data sheet

1. General description

The 74AHC541; 74AHCT541 is a high-speed Si-gate CMOS device.

The 74AHC541; 74AHCT541 are octal non-inverting buffer/line drivers with 3-state bus compatible outputs.

The 3-state outputs are controlled by the output enable inputs $\overline{OE}0$ and $\overline{OE}1$.

A HIGH on $\overline{OE}n$ causes the outputs to assume a high-impedance OFF-state.

2. Features

- Balanced propagation delays
- All inputs have a Schmitt-trigger action
- Inputs accepts voltages higher than V_{CC}
- For 74AHC541 only: operates with CMOS input levels
- For 74AHCT541 only: operates with TTL input levels
- ESD protection:
  - HBM JESD22-A114E exceeds 2000 V
  - MM JESD22-A115-A exceeds 200 V
  - CDM JESD22-C101C exceeds 1000 V
- Multiple package options
- Specified from -40 °C to +85 °C and from -40 °C to +125 °C

3. Ordering information

Table 1. Ordering information

Type number	Package			
	Temperature range	Name	Description	Version
74AHC541D	-40 °C to +125 °C	SO20	plastic small outline package; 20 leads; body width 7.5 mm	SOT163-1
74AHCT541D				
74AHC541PW	-40 °C to +125 °C	TSSOP20	plastic thin shrink small outline package; 20 leads; body width 4.4 mm	SOT360-1
74AHCT541PW				
74AHC541BQ	-40 °C to +125 °C	DHVQFN20	plastic dual in-line compatible thermal enhanced very thin quad flat package; no leads; 20 terminals; body 2.5 × 4.5 × 0.85 mm	SOT764-1
74AHCT541BQ				

sales@prom-elec.com / ООО ПРОМЭЛЕКТРОНИКА

4. Functional diagram

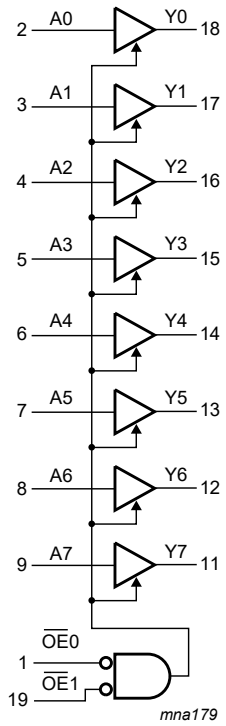

Fig. 1. Logic symbol

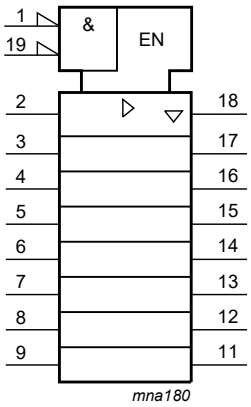

Fig. 2. IEC logic symbol

All information provided in this document is subject to legal disclaimers.

© Nexperia B.V. 2020. All rights reserved

5. Pinning information

5.1. Pinning

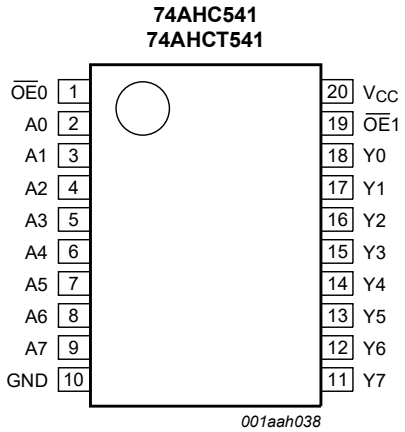

Fig. 3. Pin configuration SOT163-1 (SO20) and SOT360-1 (TSSOP20)

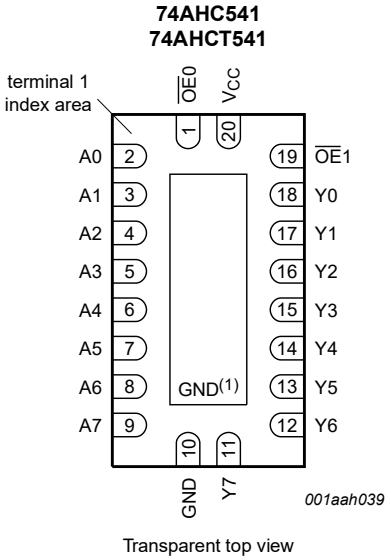

(1) This is not a ground pin. There is no electrical or mechanical requirement to solder the pad. In case soldered, the solder land should remain floating or connected to GND.

Fig. 4. Pin configuration SOT764-1 (DHVQFN20)

5.2. Pin description

Table 2. Pin description

Symbol	Pin	Description
$\overline{OE}$0	1	output enable input (active LOW)
A0, A1, A2, A3, A4, A5, A6, A7	2, 3, 4, 5, 6, 7, 8, 9	data input
GND	10	ground (0 V)
Y0, Y1, Y2, Y3, Y4, Y5, Y6, Y7	18, 17, 16, 15, 14, 13, 12, 11	data output
$\overline{OE}$1	19	output enable input (active LOW)
V_{CC}	20	supply voltage

6. Functional description

Table 3. Functional table

H = HIGH voltage level; L = LOW voltage level; X = don't care; Z = high-impedance OFF-state.

Control		Input	Output
$\overline{OE}$0	**$\overline{OE}$1**	**An**	**Yn**
L	L	L	L
L	L	H	H
X	H	X	Z
H	X	X	Z

All information provided in this document is subject to legal disclaimers.

© Nexperia B.V. 2020. All rights reserved

7. Limiting values

Table 4. Limiting values

In accordance with the Absolute Maximum Rating System (IEC 60134). Voltages are referenced to GND (ground = 0 V).

Symbol	Parameter	Conditions		Min	Max	Unit
V_{CC}	supply voltage			-0.5	+7.0	V
V_I	input voltage			-0.5	+7.0	V
I_{IK}	input clamping current	V_I < -0.5 V	[1]	-20	-	mA
I_{OK}	output clamping current	V_O < -0.5 V or V_O > V_{CC} + 0.5 V	[1]	-	±20	mA
I_O	output current	V_O = -0.5 V to (V_{CC} + 0.5 V)		-	±25	mA
I_{CC}	supply current			-	75	mA
I_{GND}	ground current			-75	-	mA
T_{stg}	storage temperature			-65	+150	°C
P_{tot}	total power dissipation	T_{amb} = -40 °C to +125 °C	[2]	-	500	mW

[1] The input and output voltage ratings may be exceeded if the input and output current ratings are observed.

[2] For SOT163-1 (SO20) package: P_{tot} derates linearly with 12.3 mW/K above 109 °C.
For SOT360-1 (TSSOP20) package: P_{tot} derates linearly with 10.0 mW/K above 100 °C.
For SOT764-1 (DHVQFN20) package: P_{tot} derates linearly with 12.9 mW/K above 111 °C.

8. Recommended operating conditions

Table 5. Recommended operating conditions

Voltages are referenced to GND (ground = 0 V).

Symbol	Parameter	Conditions	74AHC541			74AHCT541			Unit
			Min	Typ	Max	Min	Typ	Max	
V_{CC}	supply voltage		2.0	5.0	5.5	4.5	5.0	5.5	V
V_I	input voltage		0	-	5.5	0	-	5.5	V
V_O	output voltage		0	-	V_{CC}	0	-	V_{CC}	V
T_{amb}	ambient temperature		-40	+25	+125	-40	+25	+125	°C
Δt/ΔV	input transition rise and fall rate	V_{CC} = 3.3 V ± 0.3 V	-	-	100	-	-	-	ns/V
		V_{CC} = 5.0 V ± 0.5 V	-	-	20	-	-	20	ns/V

All information provided in this document is subject to legal disclaimers.

© Nexperia B.V. 2020. All rights reserved

9. Static characteristics

Table 6. Static characteristics

Voltages are referenced to GND (ground = 0 V).

Symbol	Parameter	Conditions	25 °C			-40 °C to +85 °C		-40 °C to +125 °C		Unit
			Min	Typ	Max	Min	Max	Min	Max	
For type 74AHC541										
V_{IH}	HIGH-level input voltage	V_{CC} = 2.0 V	1.5	-	-	1.5	-	1.5	-	V
		V_{CC} = 3.0 V	2.1	-	-	2.1	-	2.1	-	V
		V_{CC} = 5.5 V	3.85	-	-	3.85	-	3.85	-	V
V_{IL}	LOW-level input voltage	V_{CC} = 2.0 V	-	-	0.5	-	0.5	-	0.5	V
		V_{CC} = 3.0 V	-	-	0.9	-	0.9	-	0.9	V
		V_{CC} = 5.5 V	-	-	1.65	-	1.65	-	1.65	V
V_{OH}	HIGH-level output voltage	$V_I = V_{IH}$ or V_{IL}								
		I_O = -50 μA; V_{CC} = 2.0 V	1.9	2.0	-	1.9	-	1.9	-	V
		I_O = -50 μA; V_{CC} = 3.0 V	2.9	3.0	-	2.9	-	2.9	-	V
		I_O = -50 μA; V_{CC} = 4.5 V	4.4	4.5	-	4.4	-	4.4	-	V
		I_O = -4.0 mA; V_{CC} = 3.0 V	2.58	-	-	2.48	-	2.40	-	V
		I_O = -8.0 mA; V_{CC} = 4.5 V	3.94	-	-	3.8	-	3.70	-	V
V_{OL}	LOW-level output voltage	$V_I = V_{IH}$ or V_{IL}								
		I_O = 50 μA; V_{CC} = 2.0 V	-	0	0.1	-	0.1	-	0.1	V
		I_O = 50 μA; V_{CC} = 3.0 V	-	0	0.1	-	0.1	-	0.1	V
		I_O = 50 μA; V_{CC} = 4.5 V	-	0	0.1	-	0.1	-	0.1	V
		I_O = 4.0 mA; V_{CC} = 3.0 V	-	-	0.36	-	0.44	-	0.55	V
		I_O = 8.0 mA; V_{CC} = 4.5 V	-	-	0.36	-	0.44	-	0.55	V
I_{OZ}	OFF-state output current	$V_I = V_{IH}$ or V_{IL}; $V_O = V_{CC}$ or GND; V_{CC} = 5.5 V	-	-	±0.25	-	±2.5	-	±10.0	μA
I_I	input leakage current	$V_I = V_{CC}$ or GND; V_{CC} = 0 V to 5.5 V	-	-	0.1	-	1.0	-	2.0	μA
I_{CC}	supply current	$V_I = V_{CC}$ or GND; I_O = 0 A; V_{CC} = 5.5 V	-	-	4.0	-	40	-	80	μA
C_I	input capacitance		-	3.0	10	-	10	-	10	pF
C_O	output capacitance		-	4.0	-	-	-	-	-	pF

All information provided in this document is subject to legal disclaimers.

© Nexperia B.V. 2020. All rights reserved

Symbol	Parameter	Conditions	25 °C			-40 °C to +85 °C		-40 °C to +125 °C		Unit
			Min	Typ	Max	Min	Max	Min	Max	
For type 74AHCT541										
V_{IH}	HIGH-level input voltage	V_{CC} = 4.5 V to 5.5 V	2.0	-	-	2.0	-	2.0	-	V
V_{IL}	LOW-level input voltage	V_{CC} = 4.5 V to 5.5 V	-	-	0.8	-	0.8	-	0.8	V
V_{OH}	HIGH-level output voltage	$V_I = V_{IH}$ or V_{IL}; V_{CC} = 4.5 V								
		I_O = -50 μA	4.4	4.5	-	4.4	-	4.4	-	V
		I_O = -8.0 mA	3.94	-	-	3.8	-	3.70	-	V
V_{OL}	LOW-level output voltage	$V_I = V_{IH}$ or V_{IL}; V_{CC} = 4.5 V								
		I_O = 50 μA	-	0	0.1	-	0.1	-	0.1	V
		I_O = 8.0 mA	-	-	0.36	-	0.44	-	0.55	V
I_{OZ}	OFF-state output current	per input pin; $V_I = V_{IH}$ or V_{IL}; V_{CC} = 5.5 V; I_O = 0 A; $V_O = V_{CC}$ or GND; other pins at V_{CC} or GND	-	-	±0.25	-	±2.5	-	±10.0	μA
I_I	input leakage current	$V_I = V_{CC}$ or GND; V_{CC} = 0 V to 5.5 V	-	-	0.1	-	1.0	-	2.0	μA
I_{CC}	supply current	$V_I = V_{CC}$ or GND; I_O = 0 A; V_{CC} = 5.5 V	-	-	4.0	-	40	-	80	μA
ΔI_{CC}	additional supply current	per input pin; $V_I = V_{CC}$ - 2.1 V; I_O = 0 A; other pins at V_{CC} or GND; V_{CC} = 4.5 V to 5.5 V	-	-	1.35	-	1.5	-	1.5	mA
C_I	input capacitance		-	3	10	-	10	-	10	pF
C_O	output capacitance		-	4.0	-	-	-	-	-	pF

All information provided in this document is subject to legal disclaimers.

© Nexperia B.V. 2020. All rights reserved

10. Dynamic characteristics

Table 7. Dynamic characteristics

GND = 0 V. For test circuit see Fig. 7.

Symbol	Parameter	Conditions	25 °C			-40 °C to +85 °C		-40 °C to +125 °C		Unit
			Min	Typ[1]	Max	Min	Max	Min	Max	
For type 74AHC541										
t_{pd}	propagation delay	An to Yn; see Fig. 5 [2]								
		V_{CC} = 3.0 V to 3.6 V; C_L = 15 pF	-	5.0	7.0	1.0	8.5	1.0	9.0	ns
		V_{CC} = 3.0 V to 3.6 V; C_L = 50 pF	-	7.0	10.5	1.0	12.0	1.0	13.5	ns
		V_{CC} = 4.5 V to 5.5 V; C_L = 15 pF	-	3.5	5.0	1.0	6.0	1.0	6.5	ns
		V_{CC} = 4.5 V to 5.5 V; C_L = 50 pF		5.0	7.0	1.0	8.0	1.0	9.0	ns
t_{en}	enable time	$\overline{OE}$n to Yn; see Fig. 6 [2]								
		V_{CC} = 3.0 V to 3.6 V; C_L = 15 pF	-	5.5	10.5	1.0	11.0	1.0	13.5	ns
		V_{CC} = 3.0 V to 3.6 V; C_L = 50 pF	-	7.5	14.0	1.0	16.0	1.0	17.5	ns
		V_{CC} = 4.5 V to 5.5 V; C_L = 15 pF	-	3.5	7.2	1.0	8.5	1.0	9.0	ns
		V_{CC} = 4.5 V to 5.5 V; C_L = 50 pF	-	5.0	9.2	1.0	10.5	1.0	11.5	ns
t_{dis}	disable time	$\overline{OE}$n to Yn; see Fig. 6 [2]								
		V_{CC} = 3.0 V to 3.6 V; C_L = 15 pF	-	6.0	11.0	1.0	12.0	1.0	14.0	ns
		V_{CC} = 3.0 V to 3.6 V; C_L = 50 pF	-	9.5	15.4	1.0	17.5	1.0	19.5	ns
		V_{CC} = 4.5 V to 5.5 V; C_L = 15 pF	-	4.5	7.5	1.0	8.0	1.0	9.5	ns
		V_{CC} = 4.5 V to 5.5 V; C_L = 50 pF	-	6.5	8.8	1.0	10.0	1.0	11.0	ns
C_{PD}	power dissipation capacitance	C_L = 50 pF; f_i = 1 MHz; V_I = GND to V_{CC} [3]	-	10	-	-	-	-	-	pF
For type 74AHCT541										
t_{pd}	propagation delay	An to Yn; see Fig. 5 [2]								
		V_{CC} = 4.5 V to 5.5 V; C_L = 15 pF	-	3.5	5.5	1.0	6.5	1.0	7.0	ns
		V_{CC} = 4.5 V to 5.5 V; C_L = 50 pF	-	5.0	8.5	1.0	9.5	1.0	11.0	ns
t_{en}	enable time	$\overline{OE}$n to Yn; see Fig. 6								
		V_{CC} = 4.5 V to 5.5 V; C_L = 15 pF	-	4.0	7.0	1.0	8.0	1.0	9.0	ns
		V_{CC} = 4.5 V to 5.5 V; C_L = 50 pF	-	5.5	10.0	1.0	12.0	1.0	12.5	ns
t_{dis}	disable time	$\overline{OE}$n to Yn; see Fig. 6 [2]								
		V_{CC} = 4.5 V to 5.5 V; C_L = 15 pF	-	5.0	7.0	1.0	8.0	1.0	9.0	ns
		V_{CC} = 4.5 V to 5.5 V; C_L = 50 pF	-	7.0	10.0	1.0	12.0	1.0	12.5	ns
C_{PD}	power dissipation capacitance	per buffer; C_L = 50 pF; f = 1 MHz; V_I = GND to V_{CC} [3]	-	12	-	-	-	-	-	pF

[1] Typical values are measured at nominal supply voltage (V_{CC} = 3.3 V and V_{CC} = 5.0 V).

[2] t_{pd} is the same as t_{PLH} and t_{PHL}; t_{en} is the same as t_{PZL} and t_{PZH}; t_{dis} is the same as t_{PLZ} and t_{PHZ}.

[3] C_{PD} is used to determine the dynamic power dissipation P_D (μW).

$P_D = C_{PD} \times V_{CC}^2 \times f_i + \Sigma (C_L \times V_{CC}^2 \times f_o)$ where:

f_i = input frequency in MHz;

f_o = output frequency in MHz;

C_L = output load capacitance in pF;

V_{CC} = supply voltage in Volts.

All information provided in this document is subject to legal disclaimers.

© Nexperia B.V. 2020. All rights reserved

10.1. Waveforms

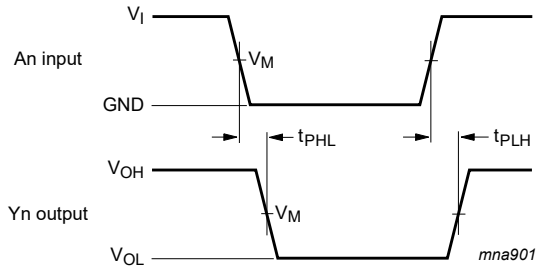

Measurement points are given in Table 8.

V_{OL} and V_{OH} are typical voltage output levels that occur with the output load.

Fig. 5. Propagation delay input (An) to output (Yn)

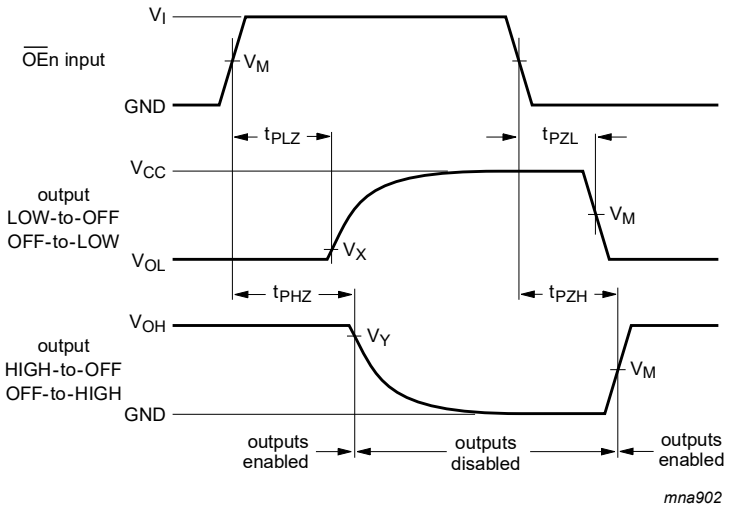

Measurement points are given in Table 8.

V_{OL} and V_{OH} are typical voltage output levels that occur with the output load.

Fig. 6. Enable and disable times

Table 8. Measurement points

Type	Input	Output		
	V_M	V_M	V_X	V_Y
74AHC541	$0.5V_{CC}$	$0.5V_{CC}$	V_{OL} + 0.3 V	V_{OH} - 0.3 V
74AHCT541	1.5 V	$0.5V_{CC}$	V_{OL} + 0.3 V	V_{OH} - 0.3 V

All information provided in this document is subject to legal disclaimers.

© Nexperia B.V. 2020. All rights reserved

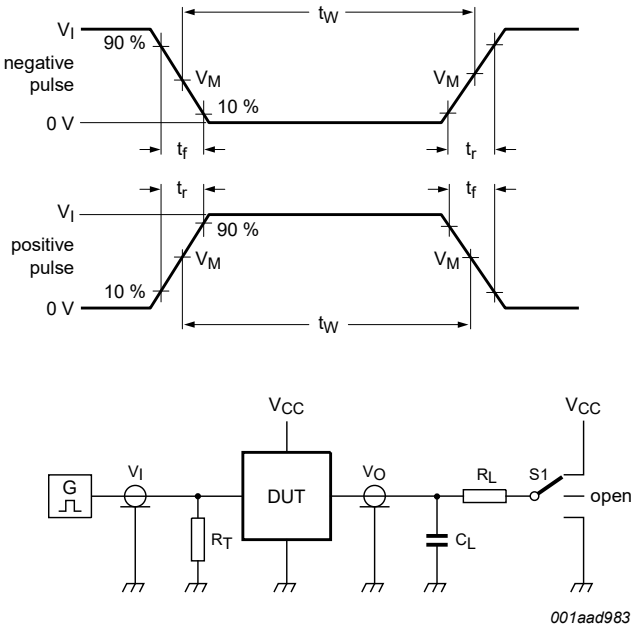

Test data is given in Table 9.

Definitions test circuit:

R_T = Termination resistance should be equal to output impedance Z_o of the pulse generator

C_L = Load capacitance including jig and probe capacitance

R_L = Load resistor

S1 = Test selection switch

Fig. 7. Test circuit for measuring switching times

Table 9. Test data

Type	Input		Load		S1 position		
	V_I	t_r, t_f	C_L	R_L	t_{PHL}, t_{PLH}	t_{PZH}, t_{PHZ}	t_{PZL}, t_{PLZ}
74AHC541	V_{CC}	3.0 ns	15 pF, 50 pF	1 kΩ	open	GND	V_{CC}
74AHCT541	3.0 V	3.0 ns	15 pF, 50 pF	1 kΩ	open	GND	V_{CC}

All information provided in this document is subject to legal disclaimers.

© Nexperia B.V. 2020. All rights reserved

11. Package outline

SO20: plastic small outline package; 20 leads; body width 7.5 mm **SOT163-1**

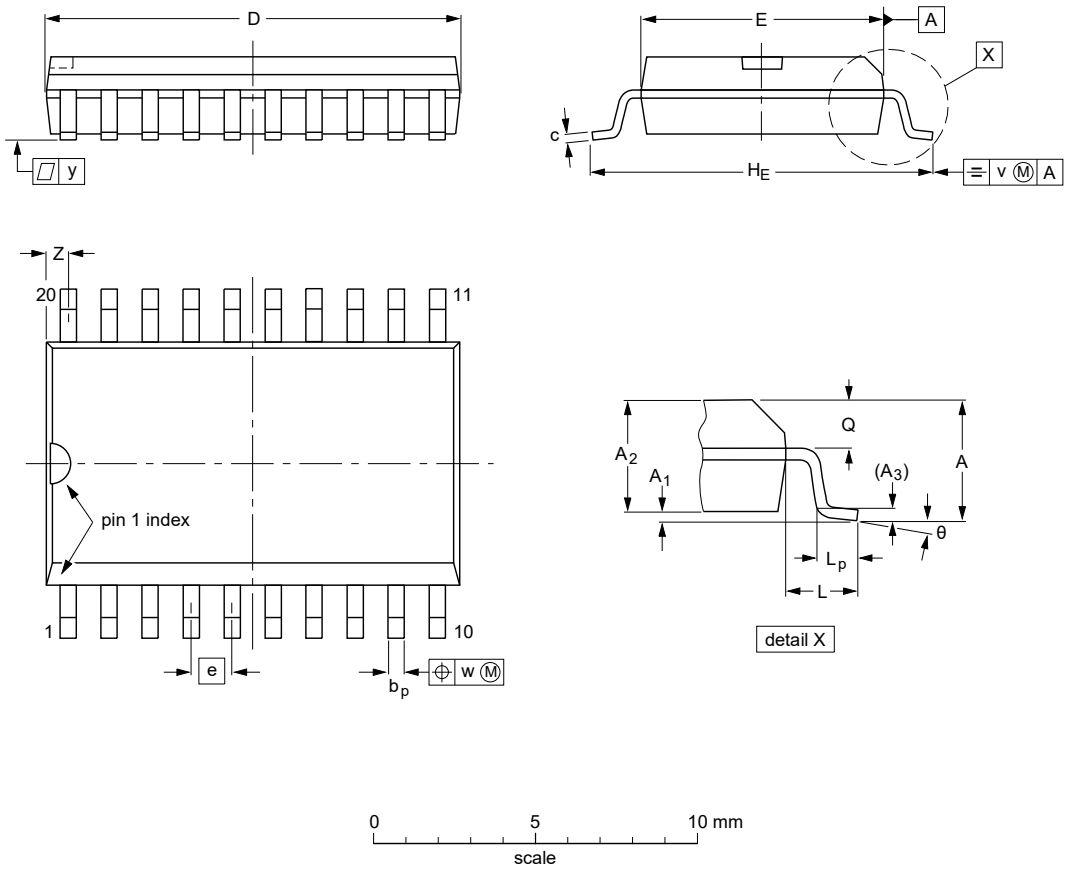

DIMENSIONS (inch dimensions are derived from the original mm dimensions)

UNIT	A max.	A_1	A_2	A_3	b_p	c	D (1)	E (1)	e	H_E	L	L_p	Q	v	w	y	Z (1)	θ
mm	2.65	0.3 0.1	2.45 2.25	0.25	0.49 0.36	0.32 0.23	13.0 12.6	7.6 7.4	1.27	10.65 10.00	1.4	1.1 0.4	1.1 1.0	0.25	0.25	0.1	0.9 0.4	8° 0°
inches	0.1	0.012 0.004	0.096 0.089	0.01	0.019 0.014	0.013 0.009	0.51 0.49	0.30 0.29	0.05	0.419 0.394	0.055	0.043 0.016	0.043 0.039	0.01	0.01	0.004	0.035 0.016	

Note

1. Plastic or metal protrusions of 0.15 mm (0.006 inch) maximum per side are not included.

OUTLINE VERSION	REFERENCES				EUROPEAN PROJECTION	ISSUE DATE
	IEC	JEDEC	JEITA			
SOT163-1	075E04	MS-013				~~99-12-27~~ 03-02-19

Fig. 8. Package outline SOT163-1 (SO20)

All information provided in this document is subject to legal disclaimers.

© Nexperia B.V. 2020. All rights reserved

TSSOP20: plastic thin shrink small outline package; 20 leads; body width 4.4 mm **SOT360-1**

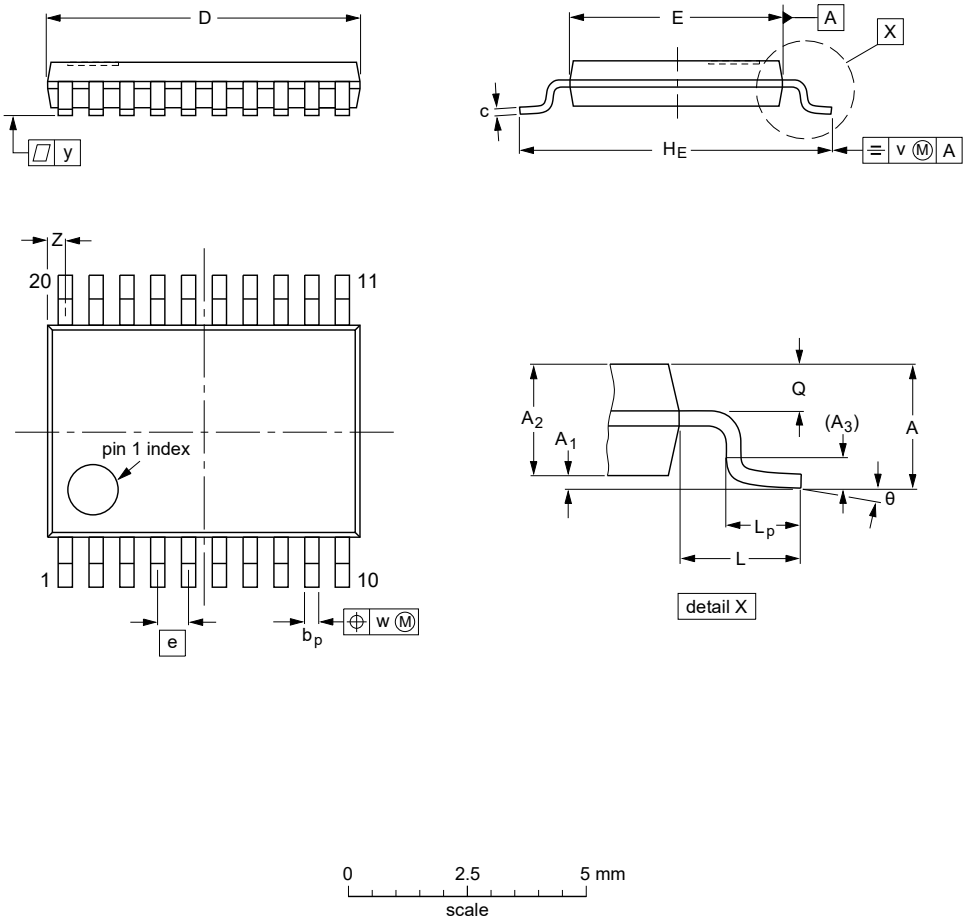

DIMENSIONS (mm are the original dimensions)

UNIT	A max.	A_1	A_2	A_3	b_p	c	D (1)	E (2)	e	H_E	L	L_p	Q	v	w	y	Z (1)	θ
mm	1.1	0.15 0.05	0.95 0.80	0.25	0.30 0.19	0.2 0.1	6.6 6.4	4.5 4.3	0.65	6.6 6.2	1	0.75 0.50	0.4 0.3	0.2	0.13	0.1	0.5 0.2	8° 0°

Notes

1. Plastic or metal protrusions of 0.15 mm maximum per side are not included.
2. Plastic interlead protrusions of 0.25 mm maximum per side are not included.

OUTLINE VERSION	REFERENCES				EUROPEAN PROJECTION	ISSUE DATE
	IEC	JEDEC	JEITA			
SOT360-1		MO-153				~~99-12-27~~ 03-02-19

Fig. 9. Package outline SOT360-1 (TSSOP20)

All information provided in this document is subject to legal disclaimers.

© Nexperia B.V. 2020. All rights reserved

DHVQFN20: plastic dual in-line compatible thermal enhanced very thin quad flat package; no leads; 20 terminals; body 2.5 x 4.5 x 0.85 mm **SOT764-1**

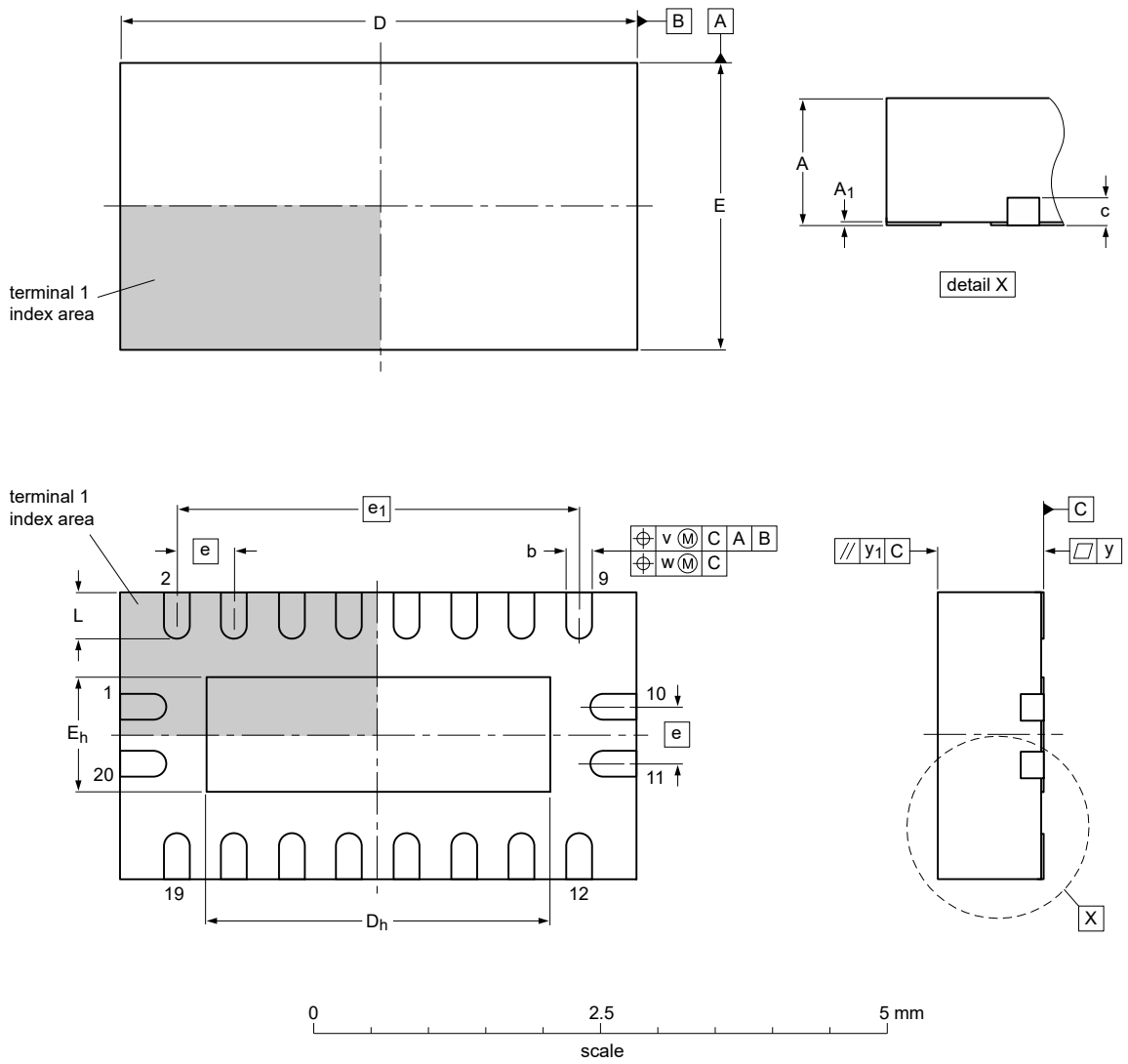

Dimensions (mm are the original dimensions)

Unit		$A^{(1)}$	A_1	b	c	$D^{(1)}$	D_h	$E^{(1)}$	E_h	e	e_1	L	v	w	y	y_1
	max	1.00	0.05	0.30		4.6	3.15	2.6	1.15			0.5				
mm	nom	0.90	0.02	0.25	0.2	4.5	3.00	2.5	1.00	0.5	3.5	0.4	0.1	0.05	0.05	0.1
	min	0.80	0.00	0.18		4.4	2.85	2.4	0.85			0.3				

Note
1. Plastic or metal protrusions of 0.075 mm maximum per side are not included.

sot764-1_po

Outline version	References				European projection	Issue date
	IEC	JEDEC	JEITA			
SOT764-1	- - -	MO-241	- - -			~~03-01-27~~ 14-12-12

Fig. 10. Package outline SOT764-1 (DHVQFN20)

All information provided in this document is subject to legal disclaimers.

© Nexperia B.V. 2020. All rights reserved

12. Abbreviations

Table 10. Abbreviations

Acronym	Description
CDM	Charged Device Model
CMOS	Complementary Metal Oxide Semiconductor
DUT	Device Under Test
ESD	ElectroStatic Discharge
HBM	Human Body Model
MM	Machine Model
TTL	Transistor-Transistor Logic

13. Revision history

Table 11. Revision history

Document ID	Release date	Data sheet status	Change notice	Supersedes
74AHC_AHCT541 v.4	20200414	Product data sheet	-	74AHC_AHCT541_3
Modifications:	• The format of this data sheet has been redesigned to comply with the identity guidelines of Nexperia. • Legal texts have been adapted to the new company name where appropriate. • Table 4: Derating values for P_{tot} total power dissipation updated. • Fig. 10: Package outline drawing SOT764-1 (DHVQFN20) updated.			
74AHC_AHCT541_3	20071112	Product data sheet		74AHC_AHCT541_2
Modifications:	• The format of this data sheet has been redesigned to comply with the new identity guidelines of NXP Semiconductors. • Legal texts have been adapted to the new company name where appropriate. • Section 3: DHVQFN20 package added. • Section 7: derating values added for DHVQFN20 package. • Section 11: outline drawing added for DHVQFN20 package.			
74AHC_AHCT541_2 (939775006301)	19991124	Product specification		74AHC_AHCT541_1
74AHC_AHCT541_1 (939775004256)	19980921	Product specification		-

All information provided in this document is subject to legal disclaimers.

© Nexperia B.V. 2020. All rights reserved

14. Legal information

Data sheet status

Document status [1][2]	Product status [3]	Definition
Objective [short] data sheet	Development	This document contains data from the objective specification for product development.
Preliminary [short] data sheet	Qualification	This document contains data from the preliminary specification.
Product [short] data sheet	Production	This document contains the product specification.

[1] Please consult the most recently issued document before initiating or completing a design.
[2] The term 'short data sheet' is explained in section "Definitions".
[3] The product status of device(s) described in this document may have changed since this document was published and may differ in case of multiple devices. The latest product status information is available on the internet at https://www.nexperia.com.

Definitions

Draft — The document is a draft version only. The content is still under internal review and subject to formal approval, which may result in modifications or additions. Nexperia does not give any representations or warranties as to the accuracy or completeness of information included herein and shall have no liability for the consequences of use of such information.

Short data sheet — A short data sheet is an extract from a full data sheet with the same product type number(s) and title. A short data sheet is intended for quick reference only and should not be relied upon to contain detailed and full information. For detailed and full information see the relevant full data sheet, which is available on request via the local Nexperia sales office. In case of any inconsistency or conflict with the short data sheet, the full data sheet shall prevail.

Product specification — The information and data provided in a Product data sheet shall define the specification of the product as agreed between Nexperia and its customer, unless Nexperia and customer have explicitly agreed otherwise in writing. In no event however, shall an agreement be valid in which the Nexperia product is deemed to offer functions and qualities beyond those described in the Product data sheet.

Disclaimers

Limited warranty and liability — Information in this document is believed to be accurate and reliable. However, Nexperia does not give any representations or warranties, expressed or implied, as to the accuracy or completeness of such information and shall have no liability for the consequences of use of such information. Nexperia takes no responsibility for the content in this document if provided by an information source outside of Nexperia.

In no event shall Nexperia be liable for any indirect, incidental, punitive, special or consequential damages (including - without limitation - lost profits, lost savings, business interruption, costs related to the removal or replacement of any products or rework charges) whether or not such damages are based on tort (including negligence), warranty, breach of contract or any other legal theory.

Notwithstanding any damages that customer might incur for any reason whatsoever, Nexperia's aggregate and cumulative liability towards customer for the products described herein shall be limited in accordance with the Terms and conditions of commercial sale of Nexperia.

Right to make changes — Nexperia reserves the right to make changes to information published in this document, including without limitation specifications and product descriptions, at any time and without notice. This document supersedes and replaces all information supplied prior to the publication hereof.

Suitability for use — Nexperia products are not designed, authorized or warranted to be suitable for use in life support, life-critical or safety-critical systems or equipment, nor in applications where failure or malfunction of an Nexperia product can reasonably be expected to result in personal injury, death or severe property or environmental damage. Nexperia and its suppliers accept no liability for inclusion and/or use of Nexperia products in such equipment or applications and therefore such inclusion and/or use is at the customer's own risk.

Quick reference data — The Quick reference data is an extract of the product data given in the Limiting values and Characteristics sections of this document, and as such is not complete, exhaustive or legally binding.

Applications — Applications that are described herein for any of these products are for illustrative purposes only. Nexperia makes no representation or warranty that such applications will be suitable for the specified use without further testing or modification.

Customers are responsible for the design and operation of their applications and products using Nexperia products, and Nexperia accepts no liability for any assistance with applications or customer product design. It is customer's sole responsibility to determine whether the Nexperia product is suitable and fit for the customer's applications and products planned, as well as for the planned application and use of customer's third party customer(s). Customers should provide appropriate design and operating safeguards to minimize the risks associated with their applications and products.

Nexperia does not accept any liability related to any default, damage, costs or problem which is based on any weakness or default in the customer's applications or products, or the application or use by customer's third party customer(s). Customer is responsible for doing all necessary testing for the customer's applications and products using Nexperia products in order to avoid a default of the applications and the products or of the application or use by customer's third party customer(s). Nexperia does not accept any liability in this respect.

Limiting values — Stress above one or more limiting values (as defined in the Absolute Maximum Ratings System of IEC 60134) will cause permanent damage to the device. Limiting values are stress ratings only and (proper) operation of the device at these or any other conditions above those given in the Recommended operating conditions section (if present) or the Characteristics sections of this document is not warranted. Constant or repeated exposure to limiting values will permanently and irreversibly affect the quality and reliability of the device.

Terms and conditions of commercial sale — Nexperia products are sold subject to the general terms and conditions of commercial sale, as published at http://www.nexperia.com/profile/terms, unless otherwise agreed in a valid written individual agreement. In case an individual agreement is concluded only the terms and conditions of the respective agreement shall apply. Nexperia hereby expressly objects to applying the customer's general terms and conditions with regard to the purchase of Nexperia products by customer.

No offer to sell or license — Nothing in this document may be interpreted or construed as an offer to sell products that is open for acceptance or the grant, conveyance or implication of any license under any copyrights, patents or other industrial or intellectual property rights.

Export control — This document as well as the item(s) described herein may be subject to export control regulations. Export might require a prior authorization from competent authorities.

Non-automotive qualified products — Unless this data sheet expressly states that this specific Nexperia product is automotive qualified, the product is not suitable for automotive use. It is neither qualified nor tested in accordance with automotive testing or application requirements. Nexperia accepts no liability for inclusion and/or use of non-automotive qualified products in automotive equipment or applications.

In the event that customer uses the product for design-in and use in automotive applications to automotive specifications and standards, customer (a) shall use the product without Nexperia's warranty of the product for such automotive applications, use and specifications, and (b) whenever customer uses the product for automotive applications beyond Nexperia's specifications such use shall be solely at customer's own risk, and (c) customer fully indemnifies Nexperia for any liability, damages or failed product claims resulting from customer design and use of the product for automotive applications beyond Nexperia's standard warranty and Nexperia's product specifications.

Translations — A non-English (translated) version of a document is for reference only. The English version shall prevail in case of any discrepancy between the translated and English versions.

Trademarks

Notice: All referenced brands, product names, service names and trademarks are the property of their respective owners.

All information provided in this document is subject to legal disclaimers.

© Nexperia B.V. 2020. All rights reserved

Contents

1. General description.....1
2. Features.....1
3. Ordering information.....1
4. Functional diagram.....2
5. Pinning information.....3
5.1. Pinning.....3
5.2. Pin description.....3
6. Functional description.....3
7. Limiting values.....4
8. Recommended operating conditions.....4
9. Static characteristics.....5
10. Dynamic characteristics.....7
10.1. Waveforms.....8
11. Package outline.....10
12. Abbreviations.....13
13. Revision history.....13
14. Legal information.....14

© Nexperia B.V. 2020. All rights reserved

For more information, please visit: http://www.nexperia.com
For sales office addresses, please send an email to: salesaddresses@nexperia.com
Date of release: 14 April 2020