100kHz, 5A, 2.5A and 1.25A High Efficiency Switching Regulators

FEATURES

- **Wide Input Voltage Range: 3V to 60V**
- **Low Quiescent Current: 6mA**
- **Internal 5A Switch (2.5A for LT1171, 1.25A for LT1172)**
- **Shutdown Mode Draws Only 50μA Supply Current**
- Very Few External Parts Required
- Self-Protected Against Overloads
- Operates in Nearly All Switching Topologies
- Flyback-Regulated Mode Has Fully Floating Outputs
- Comes in Standard 5-Pin Packages
- LT1172 Available in 8-Pin MiniDIP and Surface Mount Packages
- Can Be Externally Synchronized

APPLICATIONS

- Logic Supply 5V at 10A
- 5V Logic to ±15V Op Amp Supply
- Battery Upconverter
- Power Inverter (+ to –) or (– to +)
- Fully Floating Multiple Outputs

USER NOTE:

This data sheet is only intended to provide specifications, graphs, and a general functional description of the LT1170/LT1171/LT1172. Application circuits are included to show the capability of the LT1170/LT1171/LT1172. A complete design manual (AN19) should be obtained to assist in developing new designs. This manual contains a comprehensive discussion of both the LT1070 and the external components used with it, as well as complete formulas for calculating the values of these components. The manual can also be used for the LT1170/LT1171/LT1172 by factoring in the higher frequency. A CAD design program called SwitcherCAD™ is also available.

DESCRIPTION

The LT®1170/LT1171/LT1172 are monolithic high power switching regulators. They can be operated in all standard switching configurations including buck, boost, flyback, forward, inverting and "Cuk." A high current, high efficiency switch is included on the die along with all oscillator, control and protection circuitry. Integration of all functions allows the LT1170/LT1171/LT1172 to be built in a standard 5-pin TO-3 or TO-220 power package as well as the 8-pin packages (LT1172). This makes them extremely easy to use and provides "bust proof" operation similar to that obtained with 3-pin linear regulators.

The LT1170/LT1171/LT1172 operate with supply voltages from 3V to 60V, and draw only 6mA quiescent current. They can deliver load power up to 100W with no external power devices. By utilizing current-mode switching techniques, they provide excellent AC and DC load and line regulation.

The LT1170/LT1171/LT1172 have many unique features not found even on the vastly more difficult to use low power control chips presently available. They use adaptive antisat switch drive to allow very wide ranging load currents with no loss in efficiency. An externally activated shutdown mode reduces total supply current to 50μA typically for standby operation.

LT, LTC and LT are registered trademarks of Linear Technology Corporation.
SwitcherCAD is a trademark of Linear Technology Corporation.

TYPICAL APPLICATION

Boost Converter (5V to 12V)

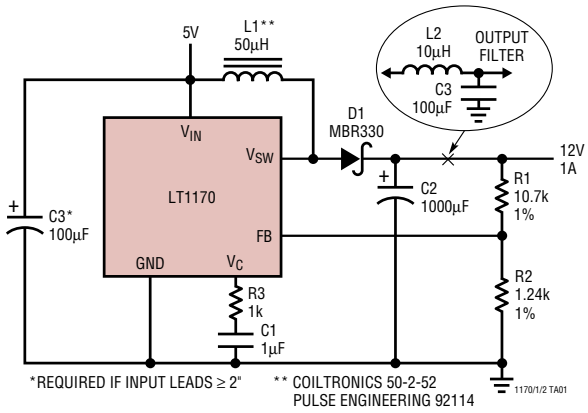

Maximum Output Power*

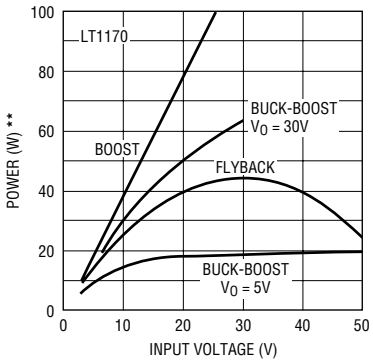

* ROUGH GUIDE ONLY. BUCK MODE $P_{OUT} = (5A)(V_{OUT})$ SPECIAL TOPOLOGIES DELIVER MORE POWER.

** **DIVIDE VERTICAL POWER SCALE BY TWO FOR LT1171, BY FOUR FOR LT1172.**

LT1170/1/2 TA02

117012ff

sales@prom-elec.com / ООО ПРОМЭЛЕКТРОНИКА

ABSOLUTE MAXIMUM RATINGS (Note 1)

Supply Voltage
- LT1170/71/72HV (Note 2) 60V
- LT1170/71/72 (Note 2) 40V

Switch Output Voltage
- LT1170/71/72HV 75V
- LT1170/71/72 ..... 65V
- LT1172S8 ..... 60V

Feedback Pin Voltage (Transient, 1ms) ..... ±15V

Storage Temperature Range ..... –65°C to 150°C

Lead Temperature (Soldering, 10 sec) ..... 300°C

Operating Junction Temperature Range
- LT1170/71/72M **(OBSOLETE)** .. –55°C to 150°C
- LT1170/71/72HVC,
  - LT1170/71/72C (Oper.) ..... 0°C to 100°C
- LT1170/71/72HVC
  - LT1170/71/72C (Sh. Ckt.) ..... 0°C to 125°C

} C

- LT1170/71/72HVI,
  - LT1170/71/72I (Oper.) ..... –40°C to 100°C
- LT1170/71/72HVI,
  - LT1170/71/72I (Sh. Ckt.) ..... –40°C to 125°C

} I

PACKAGE/ORDER INFORMATION

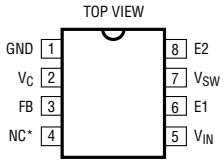

N8 PACKAGE 8-LEAD PDIP
S8 PACKAGE 8-LEAD PLASTIC SO

* Do not connect Pin 4 of the LT1172 DIP or SO to external circuitry. This pin may be active in future revisions.

T_{JMAX} = 100°C, θ_{JA} = 100°C/W (N)
T_{JMAX} = 100°C, θ_{JA} = 120°C/W to 150°C/W depending on board layout (S)

ORDER PART NUMBER
LT1172CN8 LT1172IN8 LT1172CS8 LT1172IS8

S8 PART MARKING
1172 1172I

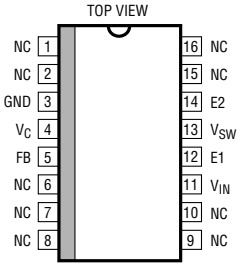

SW PACKAGE 16-LEAD PLASTIC SO WIDE

T_{JMAX} = 100°C, θ_{JA} = 150°C/W

Based on continuous operation.
T_{JMAX} = 125°C for intermittent fault conditions.

ORDER PART NUMBER
LT1172CSW

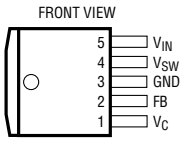

Q PACKAGE 5-LEAD DD

T_{JMAX} = 100°C, θ_{JA} = *°C/W

*θ will vary from approximately 25°C/W with 2.8 sq. in. of 1oz. copper to 45°C/W with 0.20 sq. in. of 1oz. copper. Somewhat lower values can be obtained with additional copper layers in multilayer boards.

ORDER PART NUMBER
LT1170CQ LT1170IQ LT1170HVCQ LT1171CQ LT1171IQ LT1171HVCQ LT1171HVIQ LT1172CQ LT1172HVCQ LT1172HVIQ

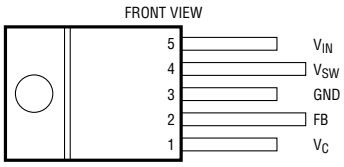

T PACKAGE 5-LEAD PLASTIC TO-220

	T_{JMAX}	θ_{JC}	θ_{JA}
LT1170CT/LT1170HVCT	100°C	2°C/W	75°C/W
LT1171CT/LT1171HVCT	100°C	4°C/W	75°C/W
LT1172CT/LT1172HVCT	100°C	8°C/W	75°C/W

Based on continuous operation.
T_{JMAX} = 125°C for intermittent fault conditions.

ORDER PART NUMBER
LT1170CT LT1170IT LT1170HVCT LT1170HVIT LT1171CT LT1171IT LT1171HVCT LT1171HVIT LT1172CT LT1172HVCT

PACKAGE/ORDER INFORMATION

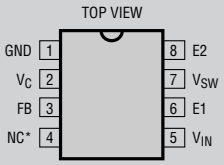

J8 PACKAGE
8-LEAD CERDIP

* Do not connect Pin 4 of the LT1172 DIP or SO to external circuitry. This pin may be active in future revisions.

T_{JMAX} = 150°C, θ_{JA} = 100°C/W

ORDER PART NUMBER

LT1172MJ8
LT1172CJ8

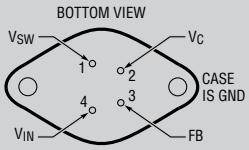

K PACKAGE
4-LEAD TO-3 METAL CAN

	T_{JMAX}	θ_{JC}	θ_{JA}
LT1170MK	150°C	2°C/W	35°C/W
LT1170CK	100°C	2°C/W	35°C/W
LT1171MK	150°C	4°C/W	35°C/W
LT1171CK	100°C	4°C/W	35°C/W
LT1172MK	150°C	8°C/W	35°C/W
LT1172CK	150°C	8°C/W	35°C/W

Based on continuous operation.
T_{JMAX} = 125°C for intermittent fault conditions.

ORDER PART NUMBER

LT1170MK
LT1170CK
LT1171MK
LT1171CK
LT1172MK
LT1172CK

OBSOLETE PACKAGES

ELECTRICAL CHARACTERISTICS

The ● denotes the specifications which apply over the full operating temperature range, otherwise specifications are at T_A = 25°C. V_{IN} = 15V, V_C = 0.5V, V_{FB} = V_{REF}, output pin open, unless otherwise noted.

SYMBOL	PARAMETER	CONDITIONS		MIN	TYP	MAX	UNITS
V_{REF}	Reference Voltage	Measured at Feedback Pin V_C = 0.8V	 ●	1.224 1.214	1.244 1.244	1.264 1.274	V V
I_B	Feedback Input Current	V_{FB} = V_{REF}	 ●		350	750 1100	nA nA
g_m	Error Amplifier Transconductance	ΔI_C = ±25µA	 ●	3000 2400	4400	6000 7000	µmho µmho
	Error Amplifier Source or Sink Current	V_C = 1.5V	 ●	150 120	200	350 400	µA µA
	Error Amplifier Clamp Voltage	Hi Clamp, V_{FB} = 1V Lo Clamp, V_{FB} = 1.5V		1.80 0.25	 0.38	2.30 0.52	V V
	Reference Voltage Line Regulation	3V ≤ V_{IN} ≤ V_{MAX} V_C = 0.8V	●			0.03	%/V
A_V	Error Amplifier Voltage Gain	0.9V ≤ V_C ≤ 1.4V		500	800		V/V
	Minimum Input Voltage (Note 5)		●		2.6	3.0	V
I_Q	Supply Current	3V ≤ V_{IN} ≤ V_{MAX}, V_C = 0.6V			6	9	mA
	Control Pin Threshold	Duty Cycle = 0	 ●	0.8 0.6	0.9	1.08 1.25	V V
	Normal/Flyback Threshold on Feedback Pin			0.4	0.45	0.54	V
V_{FB}	Flyback Reference Voltage (Note 5)	I_{FB} = 50µA	 ●	15.0 14.0	16.3	17.6 18.0	V V
	Change in Flyback Reference Voltage	0.05 ≤ I_{FB} ≤ 1mA		4.5	6.8	9	V
	Flyback Reference Voltage Line Regulation (Note 5)	I_{FB} = 50µA 7V ≤ V_{IN} ≤ V_{MAX}			0.01	0.03	%/V
	Flyback Amplifier Transconductance (g_m)	ΔI_C = ±10µA		150	300	650	µmho

ELECTRICAL CHARACTERISTICS

The ● denotes the specifications which apply over the full operating temperature range, otherwise specifications are at T_A = 25°C. V_{IN} = 15V, V_C = 0.5V, V_{FB} = V_{REF}, output pin open, unless otherwise noted.

SYMBOL	PARAMETER		CONDITIONS			MIN	TYP	MAX	UNITS
	Flyback Amplifier Source and Sink Current		V_C = 0.6V I_{FB} = 50µA	Source Sink	● ●	15 25	32 40	70 70	µA µA
BV	Output Switch Breakdown Voltage		3V ≤ V_{IN} ≤ V_{MAX}, I_{SW} = 1.5mA	LT1170/LT1171/LT1172 LT1170HV/LT1171HV/LT1172HV LT1172S8	● ● ●	65 75 60	90 90 80		V V V
V_{SAT}	Output Switch "On" Resistance (Note 3)		LT1170 LT1171 LT1172		● ● ●		0.15 0.30 0.60	0.24 0.50 1.00	Ω Ω Ω
	Control Voltage to Switch Current Transconductance		LT1170 LT1171 LT1172				8 4 2		A/V A/V A/V
I_{LIM}	Switch Current Limit	(LT1170)	Duty Cycle = 50% Duty Cycle = 50% Duty Cycle = 80% (Note 4)	T_J ≥ 25°C T_J < 25°C	● ● ●	5 5 4		10 11 10	A A A
		(LT1171)	Duty Cycle = 50% Duty Cycle = 50% Duty Cycle = 80% (Note 4)	T_J ≥ 25°C T_J < 25°C	● ● ●	2.5 2.5 2.0		5.0 5.5 5.0	A A A
		(LT1172)	Duty Cycle = 50% Duty Cycle = 50% Duty Cycle = 80% (Note 4)	T_J ≥ 25°C T_J < 25°C	● ● ●	1.25 1.25 1.00		3.0 3.5 2.5	A A A
$\frac{\Delta I_{IN}}{\Delta I_{SW}}$	Supply Current Increase During Switch On-Time						25	35	mA/A
f	Switching Frequency				 ●	88 85	100	112 115	kHz kHz
DC_{MAX}	Maximum Switch Duty Cycle				●	85	92	97	%
	Shutdown Mode Supply Current		3V ≤ V_{IN} ≤ V_{MAX} V_C = 0.05V				100	250	µA
	Shutdown Mode Threshold Voltage		3V ≤ V_{IN} ≤ V_{MAX}		 ●	100 50	150	250 300	mV mV
	Flyback Sense Delay Time (Note 5)						1.5		µs

Note 1: Absolute Maximum Ratings are those values beyond which the life of the device may be impaired.

Note 2: Minimum effective switch "on" time for the LT1170/71/72 (in current limit only) is ≈ 0.6µs. This limits the maximum safe input voltage during an output shorted condition. Buck mode and inverting mode input voltage during an output shorted condition is limited to:

$$V_{IN}\text{ (max, output shorted)} = 15V + \frac{(R)(I_L) + Vf}{(t)(f)}$$

buck and inverting mode

R = Inductor DC resistance

I_L = 10A for LT1170, 5A for LT1171, and 2.5A for LT1172

Vf = Output catch diode forward voltage at I_L

t = 0.6µs, f = 100kHz switching frequency

Maximum input voltage can be increased by increasing R or Vf.

External current limiting such as that shown in AN19, Figure 39, will provide protection up to the full supply voltage rating. C1 in Figure 39 should be reduced to 200pF.

Transformer designs will tolerate much higher input voltages because leakage inductance limits rate of rise of current in the switch. These designs must be evaluated individually to assure that current limit is well controlled up to maximum input voltage.

Boost mode designs are never protected against output shorts because the external catch diode and inductor connect input to output.

Note 3: Measured with V_C in hi clamp, V_{FB} = 0.8V. I_{SW} = 4A for LT1170, 2A for LT1171, and 1A for LT1172.

Note 4: For duty cycles (DC) between 50% and 80%, minimum guaranteed switch current is given by I_{LIM} = 3.33 (2 – DC) for the LT1170, I_{LIM} = 1.67 (2 – DC) for the LT1171, and I_{LIM} = 0.833 (2 – DC) for the LT1172.

Note 5: Minimum input voltage for isolated flyback mode is 7V. V_{MAX} = 55V for HV grade in fully isolated mode to avoid switch breakdown.

TYPICAL PERFORMANCE CHARACTERISTICS

Switch Current Limit vs Duty Cycle*

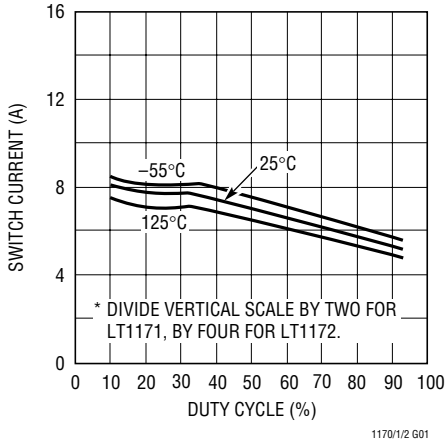

Minimum Input Voltage

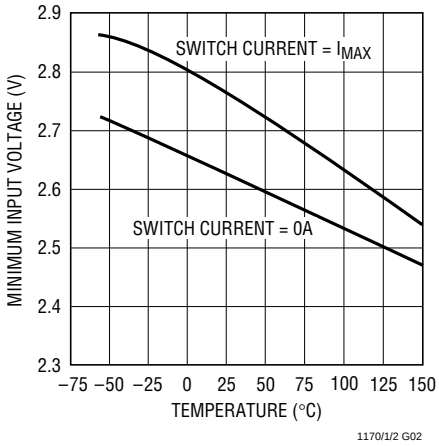

Switch Saturation Voltage

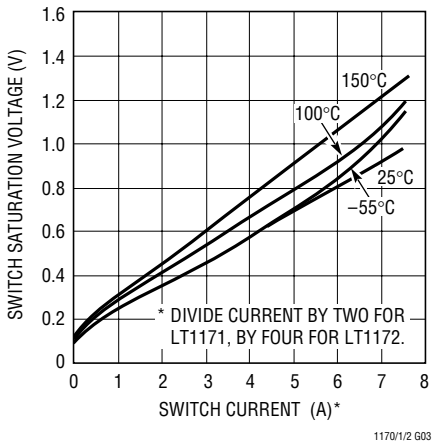

Line Regulation

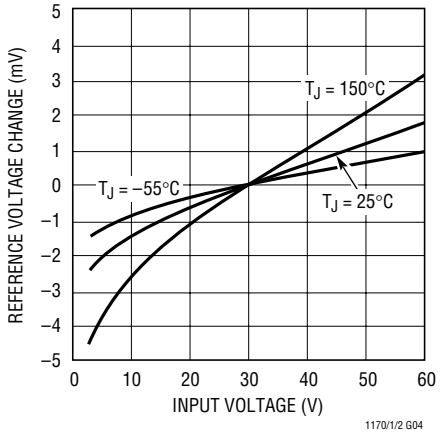

Reference Voltage vs Temperature

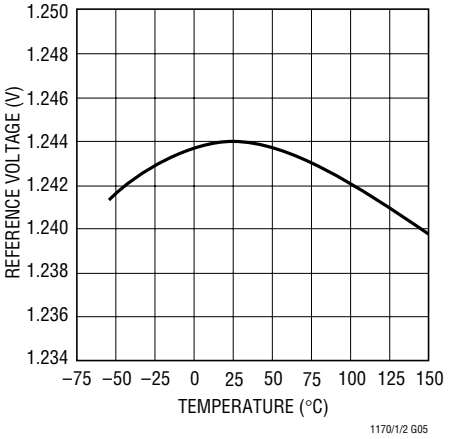

Feedback Bias Current vs Temperature

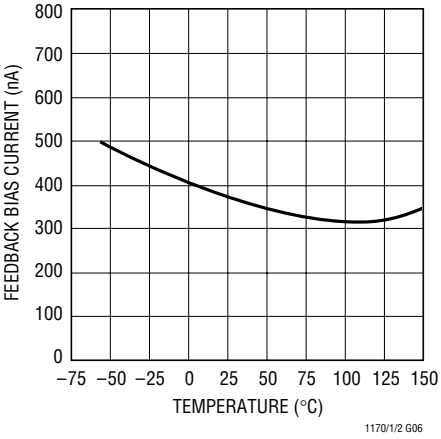

Supply Current vs Supply Voltage (Shutdown Mode)

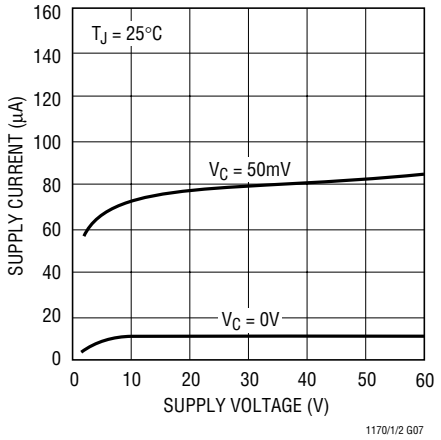

Driver Current* vs Switch Current

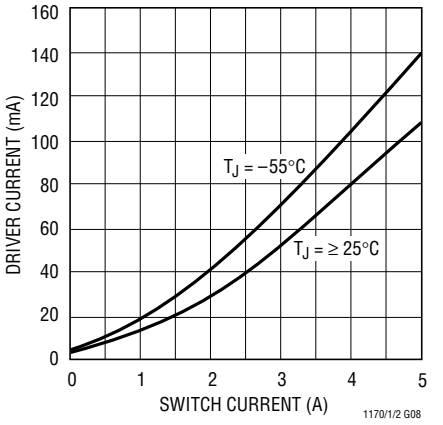

* AVERAGE LT1170 POWER SUPPLY CURRENT IS FOUND BY MULTIPLYING DRIVER CURRENT BY DUTY CYCLE, THEN ADDING QUIESCENT CURRENT.

Supply Current vs Input Voltage*

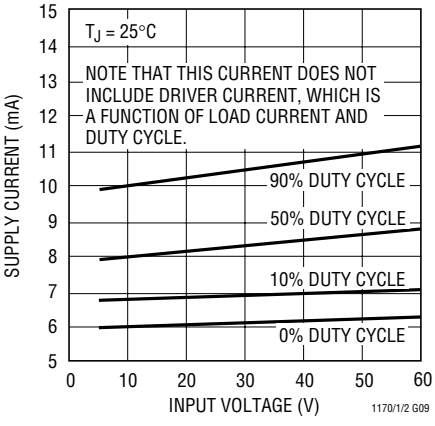

* UNDER VERY LOW OUTPUT CURRENT CONDITIONS, DUTY CYCLE FOR MOST CIRCUITS WILL APPROACH 10% OR LESS.

TYPICAL PERFORMANCE CHARACTERISTICS

Shutdown Mode Supply Current

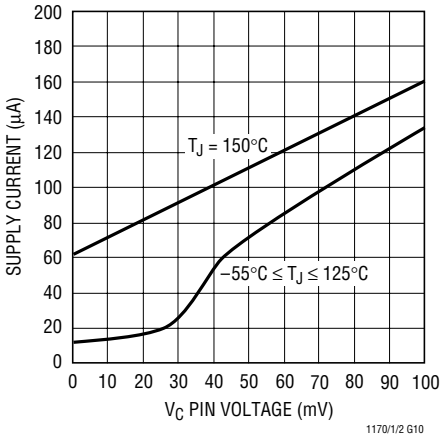

Error Amplifier Transconductance

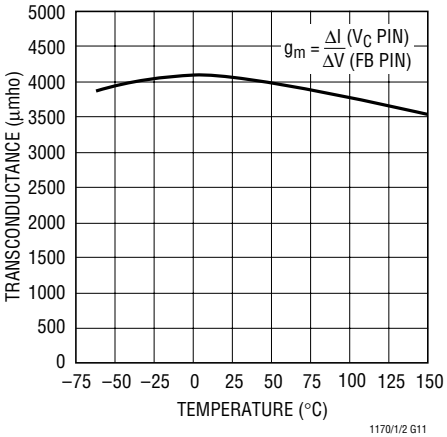

V_C Pin Characteristics

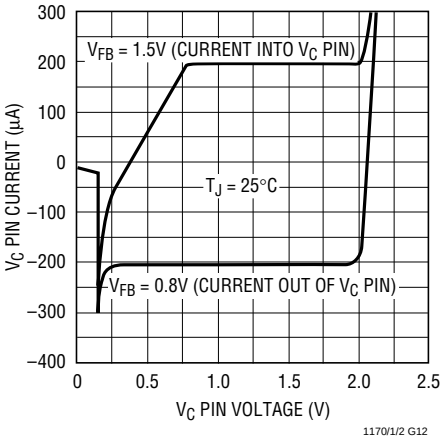

Idle Supply Current vs Temperature

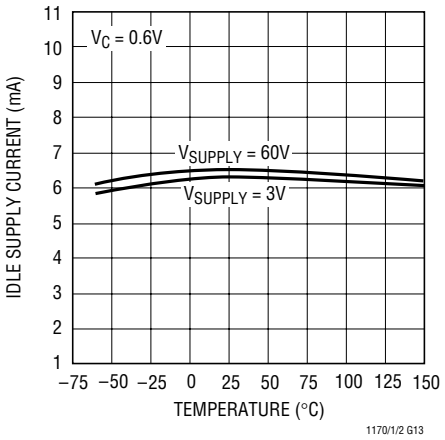

Feedback Pin Clamp Voltage

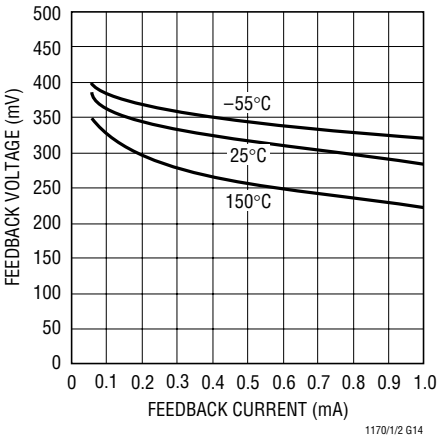

Switch "Off" Characteristics

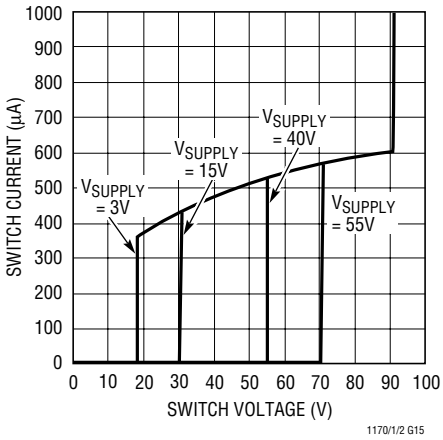

Shutdown Thresholds

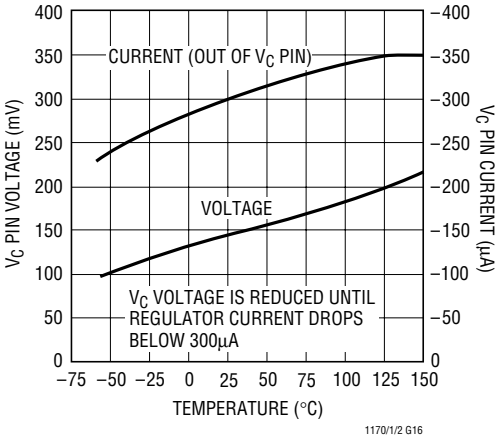

Flyback Blanking Time

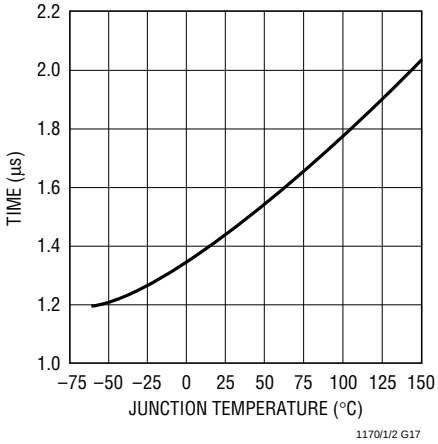

Isolated Mode Flyback Reference Voltage

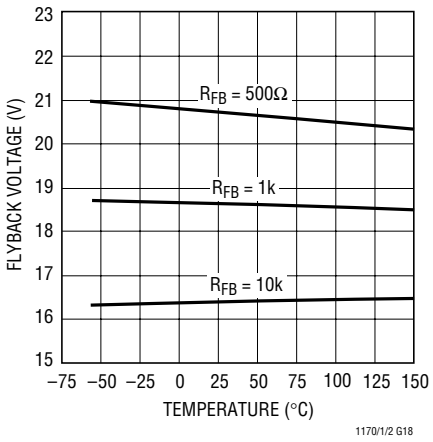

TYPICAL PERFORMANCE CHARACTERISTICS

Transconductance of Error Amplifier

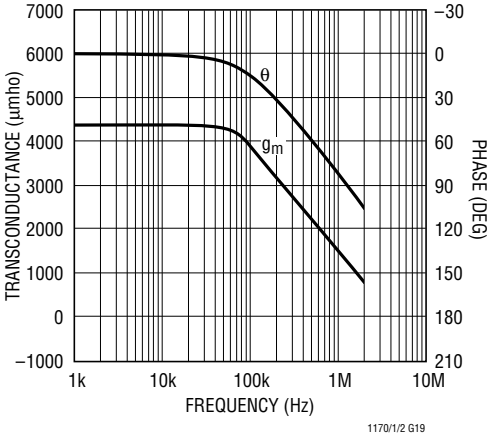

Normal/Flyback Mode Threshold on Feedback Pin

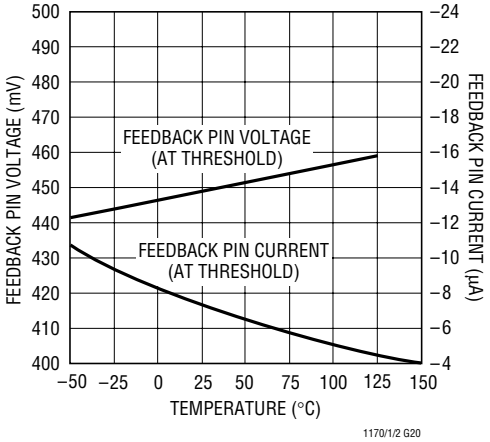

BLOCK DIAGRAM

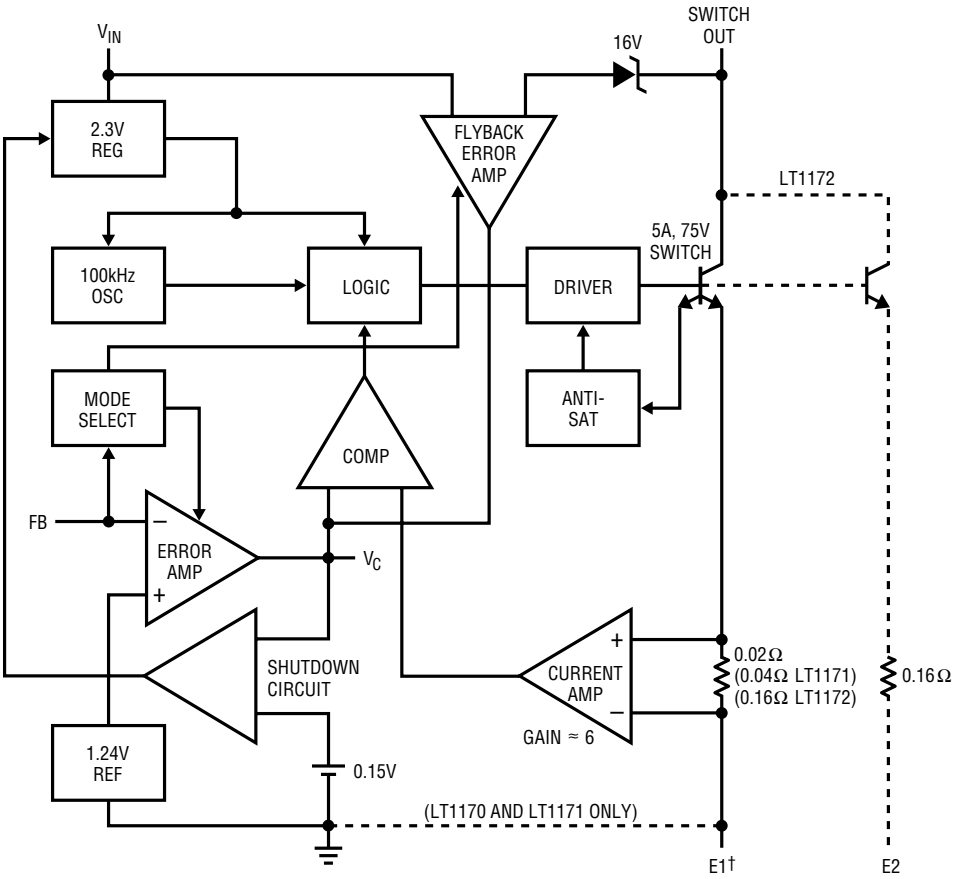

†ALWAYS CONNECT E1 TO THE GROUND PIN ON MINIDIP, 8- AND 16-PIN SURFACE MOUNT PACKAGES.
E1 AND E2 INTERNALLY TIED TO GROUND ON TO-3 AND TO-220 PACKAGES.

1170/1/2 BD

OPERATION

The LT1170/LT1171/LT1172 are current mode switchers. This means that switch duty cycle is directly controlled by switch current rather than by output voltage. Referring to the block diagram, the switch is turned "on" at the start of each oscillator cycle. It is turned "off" when switch current reaches a predetermined level. Control of output voltage is obtained by using the output of a voltage sensing error amplifier to set current trip level. This technique has several advantages. First, it has immediate response to input voltage variations, unlike ordinary switchers which have notoriously poor line transient response. Second, it reduces the 90° phase shift at midfrequencies in the energy storage inductor. This greatly simplifies closed-loop frequency compensation under widely varying input voltage or output load conditions. Finally, it allows simple pulse-by-pulse current limiting to provide maximum switch protection under output overload or short conditions. A low dropout internal regulator provides a 2.3V supply for all internal circuitry on the LT1170/LT1171/LT1172. This low dropout design allows input voltage to vary from 3V to 60V with virtually no change in device performance. A 100kHz oscillator is the basic clock for all internal timing. It turns "on" the output switch via the logic and driver circuitry. Special adaptive anti-sat circuitry detects onset of saturation in the power switch and adjusts driver current instantaneously to limit switch saturation. This minimizes driver dissipation and provides very rapid turn-off of the switch.

A 1.2V bandgap reference biases the positive input of the error amplifier. The negative input is brought out for output voltage sensing. This feedback pin has a second function; when pulled low with an external resistor, it programs the LT1170/LT1171/LT1172 to disconnect the main error amplifier output and connects the output of the flyback amplifier to the comparator input. The LT1170/LT1171/LT1172 will then regulate the value of the flyback pulse with respect to the supply voltage.* This flyback pulse is directly proportional to output voltage in the traditional transformer coupled flyback topology regulator. By regulating the amplitude of the flyback pulse, the output voltage can be regulated with no direct connection between input and output. The output is fully floating up to the breakdown voltage of the transformer windings. Multiple floating outputs are easily obtained with additional windings. A special delay network inside the LT1170/LT1171/LT1172 ignores the leakage inductance spike at the leading edge of the flyback pulse to improve output regulation.

The error signal developed at the comparator input is brought out externally. This pin (V_C) has four different functions. It is used for frequency compensation, current limit adjustment, soft starting, and total regulator shutdown. During normal regulator operation this pin sits at a voltage between 0.9V (low output current) and 2.0V (high output current). The error amplifiers are current output (g_m) types, so this voltage can be externally clamped for adjusting current limit. Likewise, a capacitor coupled external clamp will provide soft start. Switch duty cycle goes to zero if the V_C pin is pulled to ground through a diode, placing the LT1170/LT1171/LT1172 in an idle mode. Pulling the V_C pin below 0.15V causes total regulator shutdown, with only 50μA supply current for shutdown circuitry biasing. See AN19 for full application details.

Extra Pins on the MiniDIP and Surface Mount Packages

The 8- and 16-pin versions of the LT1172 have the emitters of the power transistor brought out separately from the ground pin. This eliminates errors due to ground pin voltage drops and allows the user to reduce switch current limit 2:1 by leaving the second emitter (E2) disconnected. The first emitter (E1) should always be connected to the ground pin. Note that switch "on" resistance doubles when E2 is left open, so efficiency will suffer somewhat when switch currents exceed 300mA. Also, note that chip dissipation will actually *increase* with E2 open during normal load operation, even though dissipation in current limit mode will *decrease*. See "Thermal Considerations" next.

Thermal Considerations When Using the MiniDIP and SW Packages

The low supply current and high switch efficiency of the LT1172 allow it to be used without a heat sink in most applications when the TO-220 or TO-3 package is selected. These packages are rated at 50°C/W and 35°C/W respectively. The miniDIPs, however, are rated at 100°C/W in ceramic (J) and 130°C/W in plastic (N).

*See note under block diagram.

OPERATION

Care should be taken for miniDIP applications to ensure that the worst case input voltage and load current conditions do not cause excessive die temperatures. The following formulas can be used as a rough guide to calculate LT1172 power dissipation. For more details, the reader is referred to Application Note 19 (AN19), "Efficiency Calculations" section.

Average supply current (including driver current) is:

$I_{IN} \approx 6mA + I_{SW}(0.004 + DC/40)$

I_{SW} = switch current
DC = switch duty cycle

Switch power dissipation is given by:

$P_{SW} = (I_{SW})^2 \bullet (R_{SW})(DC)$

R_{SW} = LT1172 switch "on" resistance (1Ω maximum)

Total power dissipation is the sum of supply current times input voltage plus switch power:

$P_{D(TOT)} = (I_{IN})(V_{IN}) + P_{SW}$

In a typical example, using a boost converter to generate 12V at 0.12A from a 5V input, duty cycle is approximately 60%, and switch current is about 0.65A, yielding:

$I_{IN} = 6mA + 0.65(0.004 + DC/40) = 18mA$

$P_{SW} = (0.65)^2 \bullet (1\Omega)(0.6) = 0.25W$

$P_{D(TOT)} = (5V)(0.018A) + 0.25 = 0.34W$

Temperature rise in a plastic miniDIP would be 130°C/W times 0.34W, or approximately 44°C. The maximum ambient temperature would be limited to 100°C (commercial temperature limit) minus 44°C, or 56°C.

In most applications, full load current is used to calculate die temperature. However, if overload conditions must also be accounted for, four approaches are possible. First, if loss of regulated output is acceptable under overload conditions, the internal *thermal limit* of the LT1172 will protect the die in most applications by shutting off switch current. *Thermal limit is not a tested parameter*, however, and should be considered only for noncritical applications with temporary overloads. A second approach is to use the larger TO-220 (T) or TO-3 (K) package which, even without a heat sink, may limit die temperatures to safe levels under overload conditions. In critical situations, heat sinking of these packages is required; especially if overload conditions must be tolerated for extended periods of time.

The third approach for lower current applications is to leave the second switch emitter (miniDIP only) open. This increases switch "on" resistance by 2:1, but reduces switch current limit by 2:1 also, resulting in a net 2:1 reduction in I^2R switch dissipation under current limit conditions.

The fourth approach is to clamp the V_C pin to a voltage less than its internal clamp level of 2V. The LT1172 switch current limit is zero at approximately 1V on the V_C pin and 2A at 2V on the V_C pin. Peak switch current can be externally clamped between these two levels with a diode. See AN19 for details.

LT1170/LT1171/LT1172 Synchronizing

The LT1170/LT1171/LT1172 can be externally synchronized in the frequency range of 120kHz to 160kHz. This is accomplished as shown in the accompanying figures. Synchronizing occurs when the V_C pin is pulled to ground with an external transistor. To avoid disturbing the DC characteristics of the internal error amplifier, the width of the synchronizing pulse should be under 0.3µs. C2 sets the pulse width at ≅ 0.2µs. The effect of a synchronizing pulse on the LT1170/LT1171/LT1172 amplifier offset can be calculated from:

$$\Delta V_{OS} = \frac{\left(\frac{KT}{q}\right)(t_S)(f_S)\left(I_C + \frac{V_C}{R3}\right)}{I_C}$$

$\frac{KT}{q}$ = 26mV at 25°C
t_S = pulse width
f_S = pulse frequency
I_C = V_C source current (≈200µA)
V_C = operating V_C voltage (1V to 2V)
R3 = resistor used to set mid-frequency "zero" in frequency compensation network.

OPERATION

With $t_S = 0.2\mu s$, $f_S = 150kHz$, $V_C = 1.5V$, and R3 = 2k, offset voltage shift is ≈3.8mV. This is not particularly bothersome, but note that high offsets could result if R3 were reduced to a much lower value. Also, the synchronizing transistor must sink higher currents with low values of R3, so larger drives may have to be used. The transistor must be capable of pulling the V_C pin to within 200mV of ground to ensure synchronizing.

Synchronizing with Bipolar Transistor

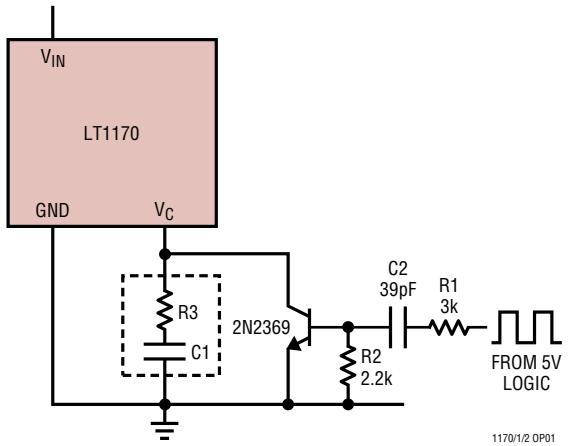

Synchronizing with MOS Transistor

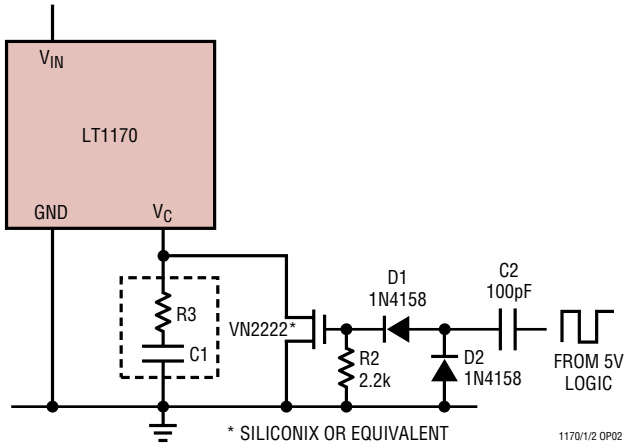

TYPICAL APPLICATIONS

Flyback Converter

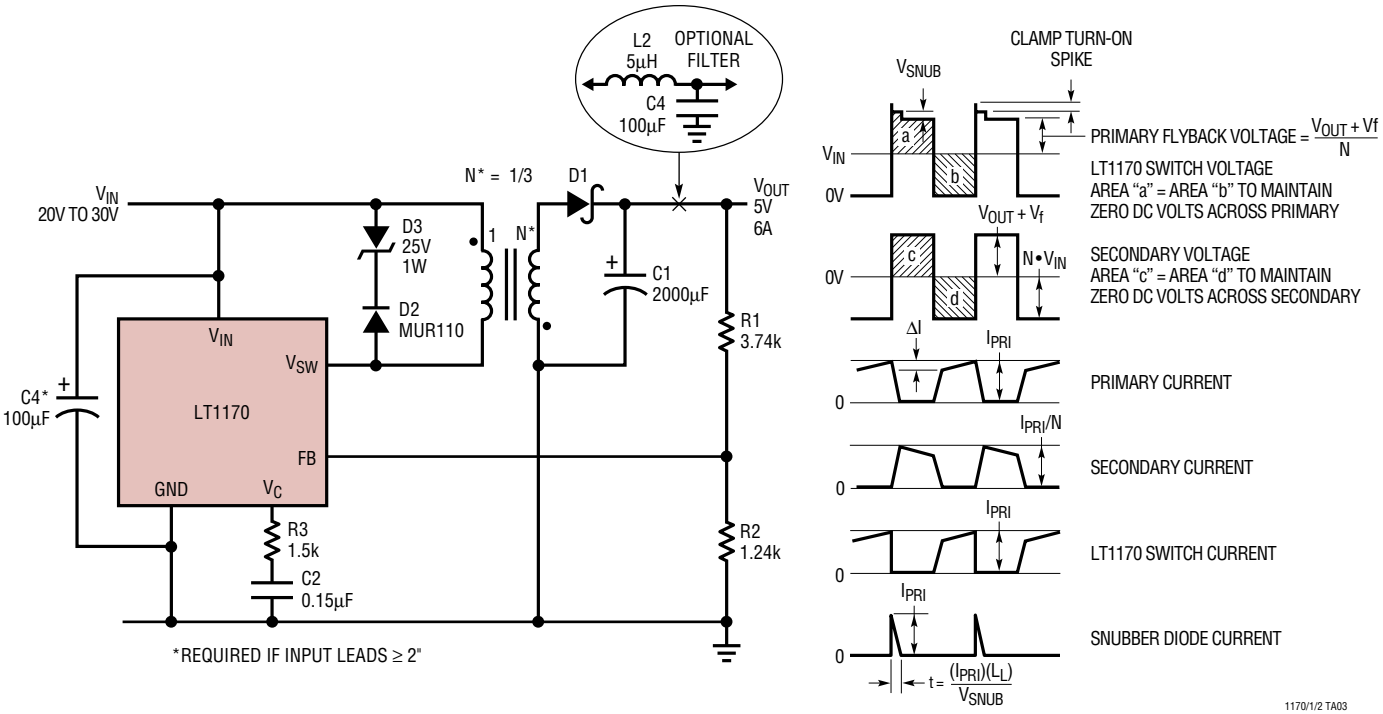

117012ff

TYPICAL APPLICATIONS (Note that maximum output currents are divided by 2 for LT1171, by 4 for LT1172.)

LCD Contrast Supply

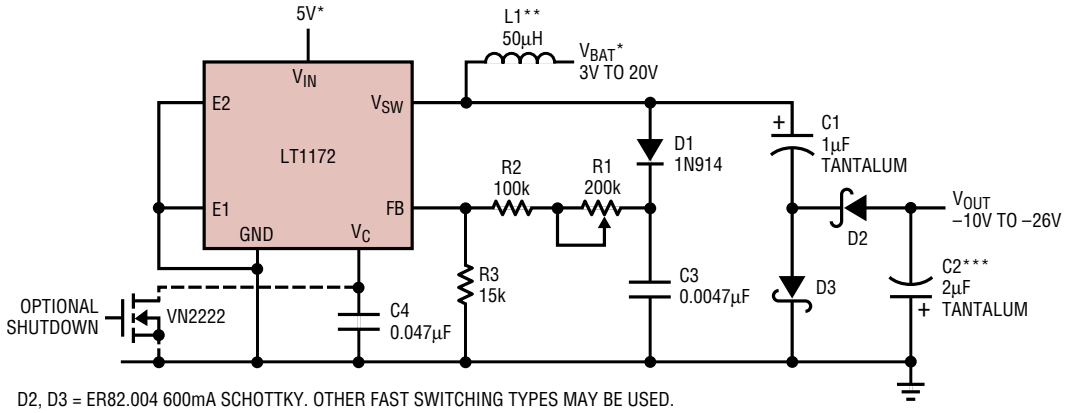

D2, D3 = ER82.004 600mA SCHOTTKY. OTHER FAST SWITCHING TYPES MAY BE USED.

* V_{IN} AND BATTERY MAY BE TIED TOGETHER. MAXIMUM VALUE FOR V_{BAT} IS EQUAL TO THE |NEGATIVE OUTPUT| + 1V. WITH HIGHER BATTERY VOLTAGES, HIGHEST EFFICIENCY IS OBTAINED BY RUNNING THE LT1172 V_{IN} PIN FROM 5V. SHUTTING OFF THE 5V SUPPLY WILL AUTOMATICALLY TURN OFF THE LT1172. EFFICIENCY IS ABOUT 80% AT I_{OUT} = 25mA.

R1, R2, R3 ARE MADE LARGE TO MINIMIZE BATTERY DRAIN IN SHUTDOWN, WHICH IS APPROXIMATELY V_{BAT} /(R1 + R2 + R3).

** FOR HIGH EFFICIENCY, L1 SHOULD BE MADE ON A FERRITE OR MOLYPERMALLOY CORE. PEAK INDUCTOR CURRENTS ARE ABOUT 600mA AT P_{OUT} = 0.7Ω. INDUCTOR SERIES RESISTANCE SHOULD BE LESS THAN 0.4Ω FOR HIGH EFFICIENCY.

*** OUTPUT RIPPLE IS ABOUT 200mV_{P-P} TO 400mV_{P-P} WITH C2 = 2µF TANTALUM. IF LOWER RIPPLE IS DESIRED, INCREASE C2, OR ADD A 10Ω , 1µF TANTALUM OUTPUT FILTER.

1170/1/2 TA04

Driving High Voltage FET (for Off-Line Applications, See AN25)

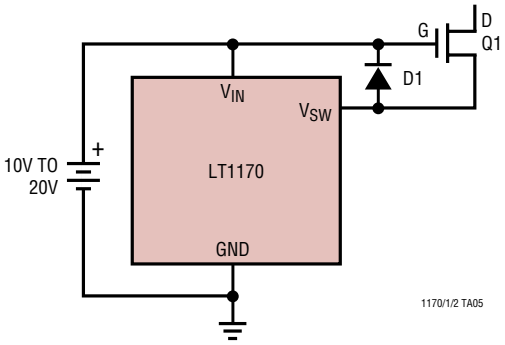

1170/1/2 TA05

External Current Limit

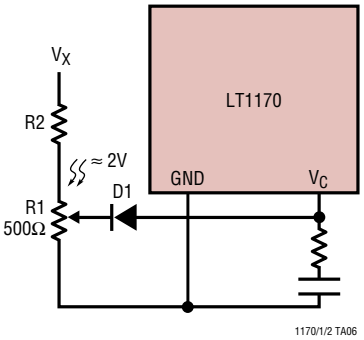

1170/1/2 TA06

TYPICAL APPLICATIONS (Note that maximum output currents are divided by 2 for LT1171, by 4 for LT1172.)

Negative-to-Positive Buck-Boost Converter†

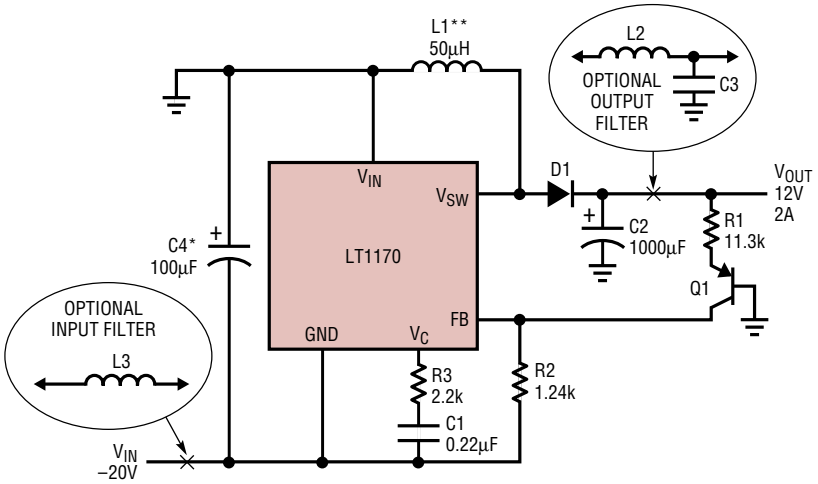

* REQUIRED IF INPUT LEADS ≥ 2"
** PULSE ENGINEERING 92114, COILTRONICS 50-2-52
† THIS CIRCUIT IS OFTEN USED TO CONVERT –48V TO 5V. TO GUARANTEE FULL SHORT-CIRCUIT PROTECTION, THE CURRENT LIMIT CIRCUIT SHOWN IN AN19, FIGURE 39, SHOULD BE ADDED WITH C1 REDUCED TO 200pF.

1170/1/2 TA07

External Current Limit

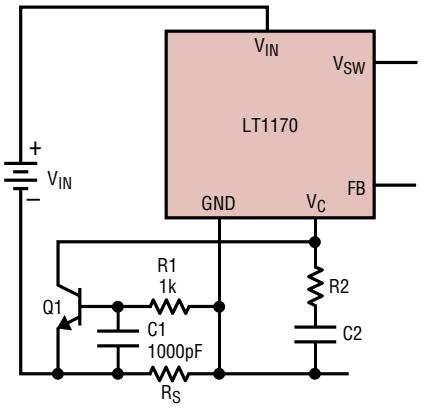

NOTE THAT THE LT1170 GND PIN IS NO LONGER COMMON TO V_{IN}^{-}.

1170/1/2 TA08

Negative Buck Converter

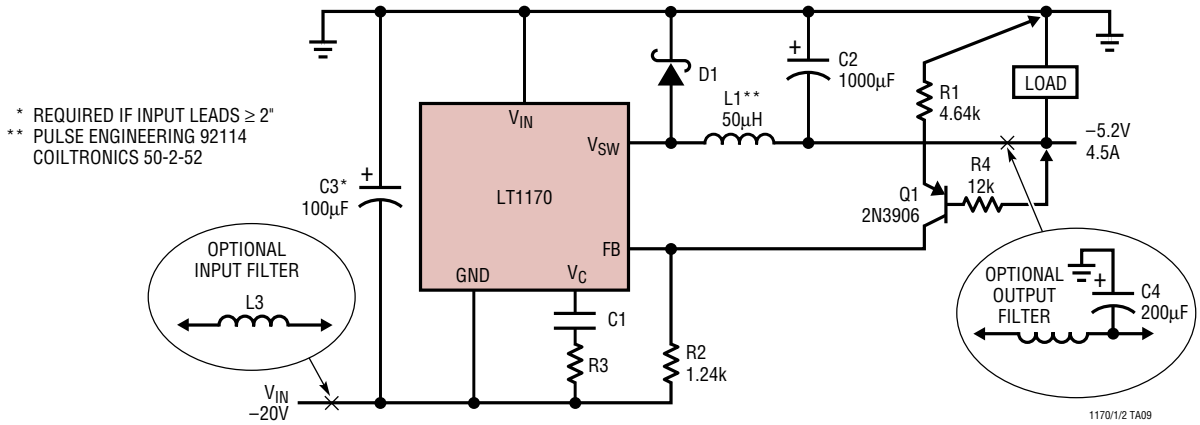

* REQUIRED IF INPUT LEADS ≥ 2"
** PULSE ENGINEERING 92114
COILTRONICS 50-2-52

1170/1/2 TA09

TYPICAL APPLICATIONS

Positive-to-Negative Buck-Boost Converter

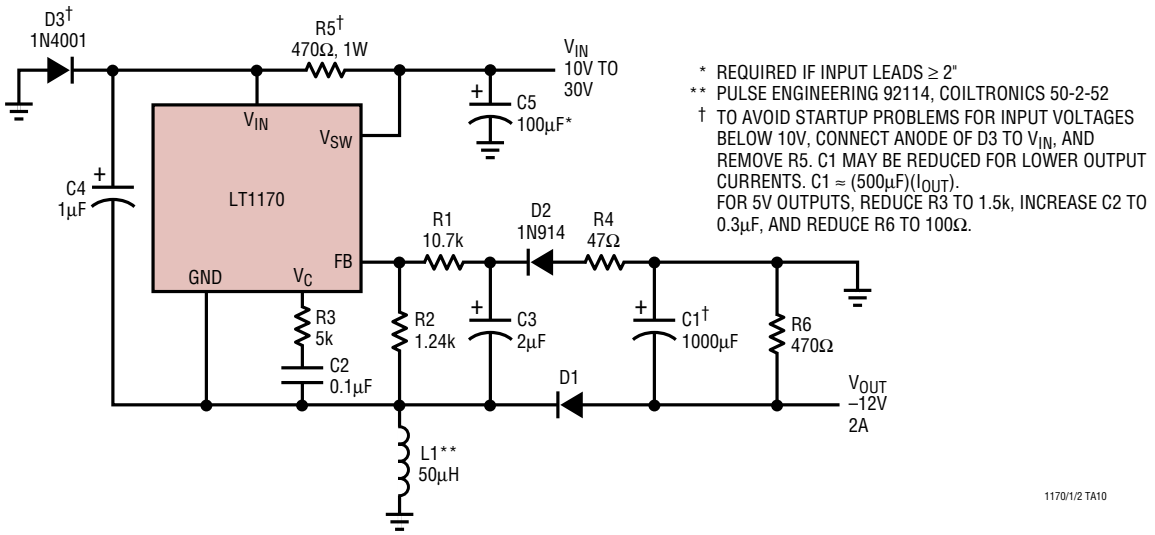

High Efficiency Constant Current Charger

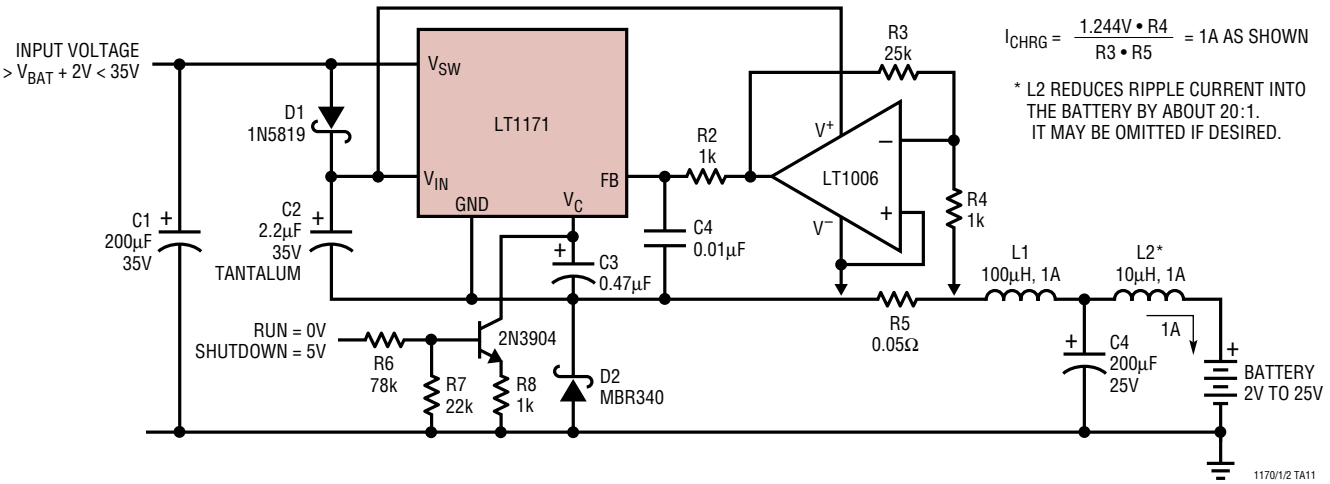

Backlight CCFL Supply (see AN45 for details)

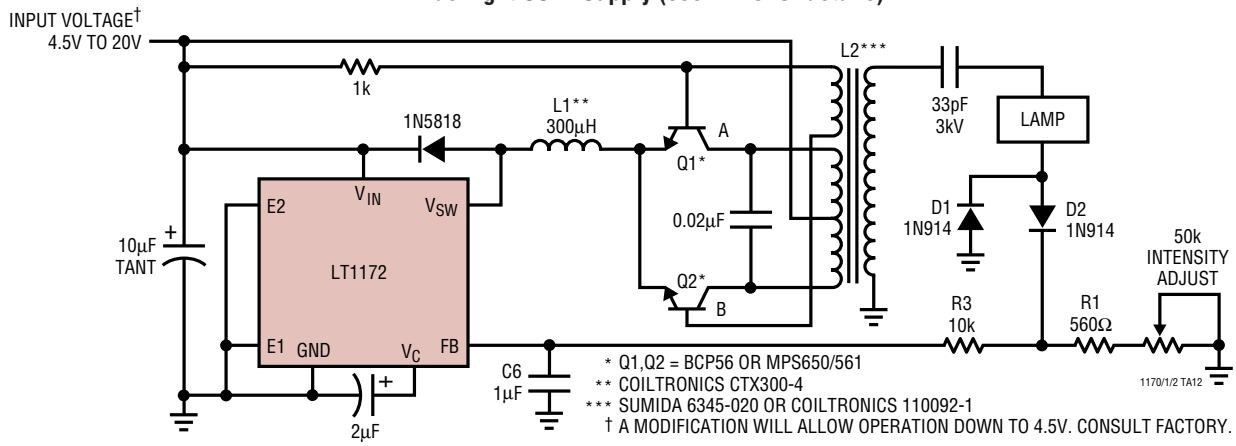

TYPICAL APPLICATIONS

Positive Buck Converter

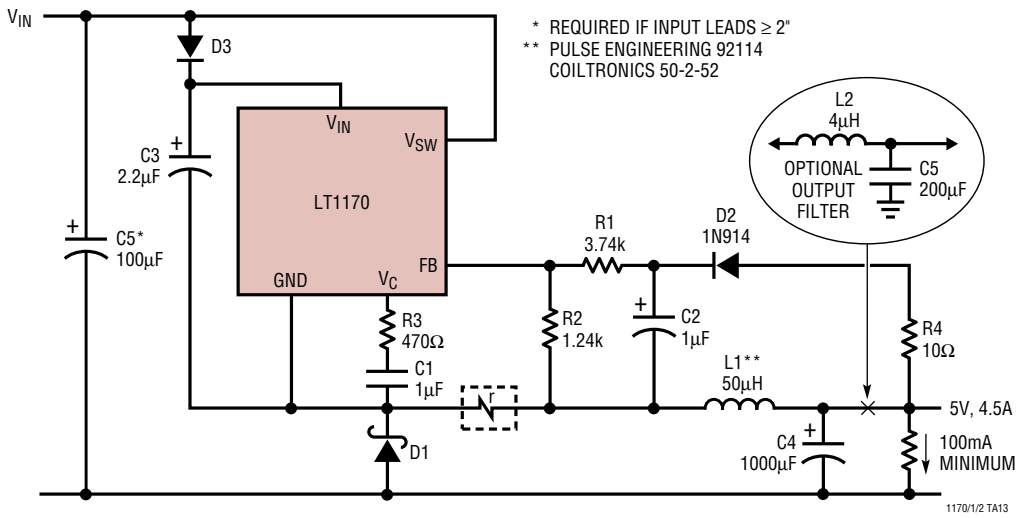

Negative Boost Regulator

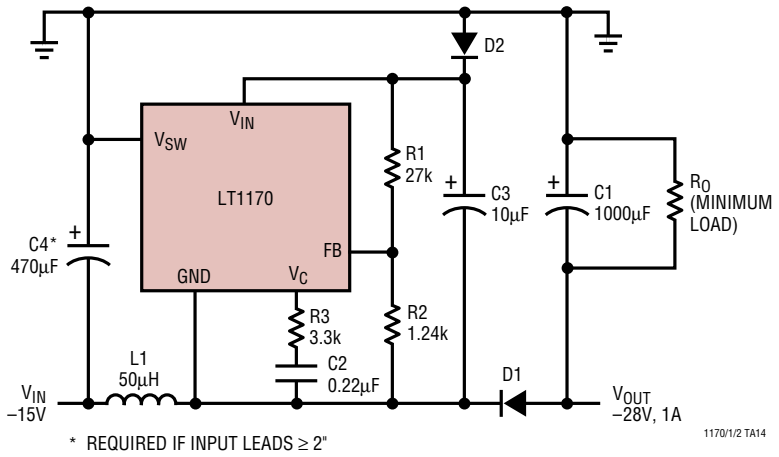

Driving High Voltage NPN

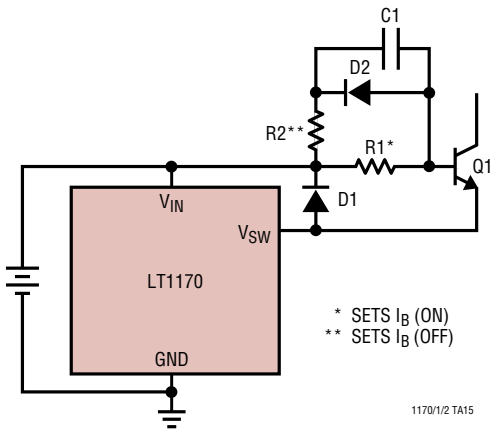

TYPICAL APPLICATIONS

Forward Converter

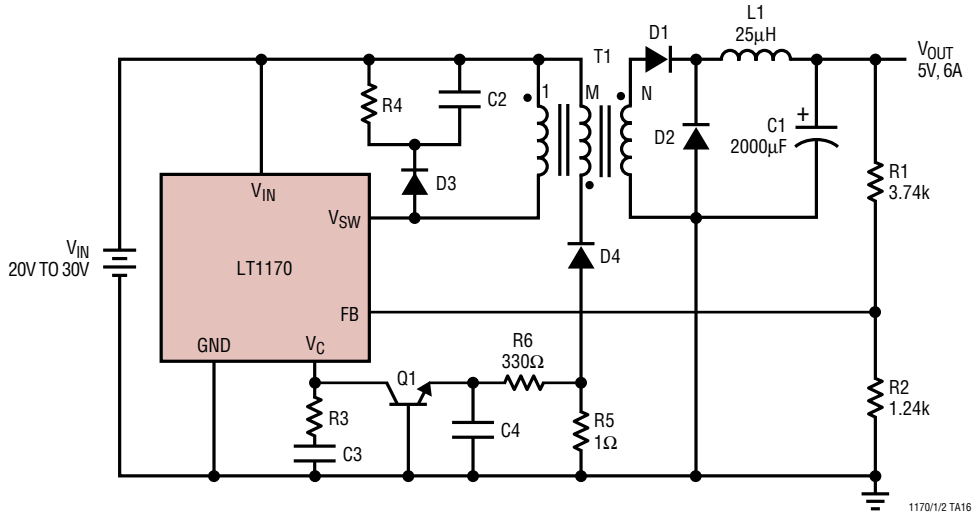

High Efficiency 5V Buck Converter

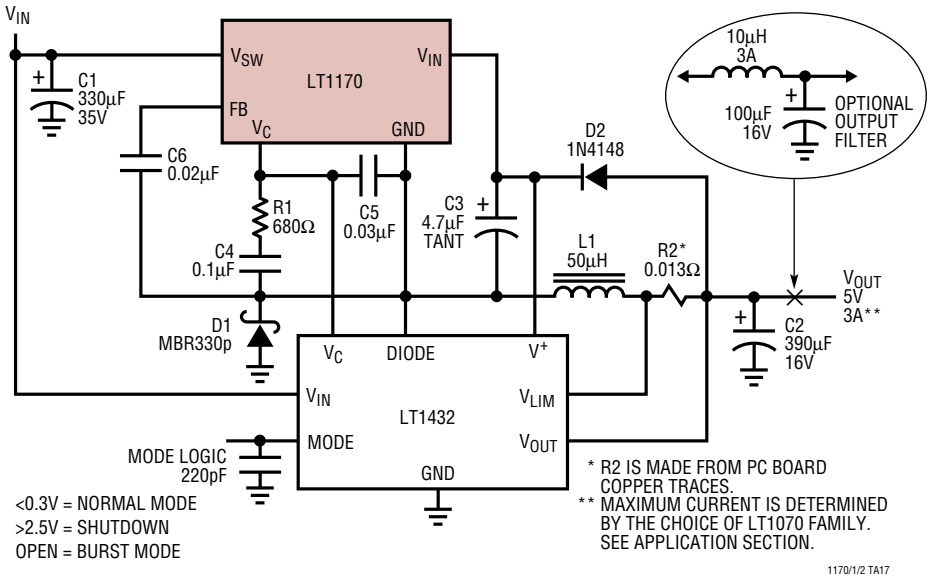

PACKAGE DESCRIPTION

J8 Package
8-Lead CERDIP (Narrow .300 Inch, Hermetic)
(Reference LTC DWG # 05-08-1110)

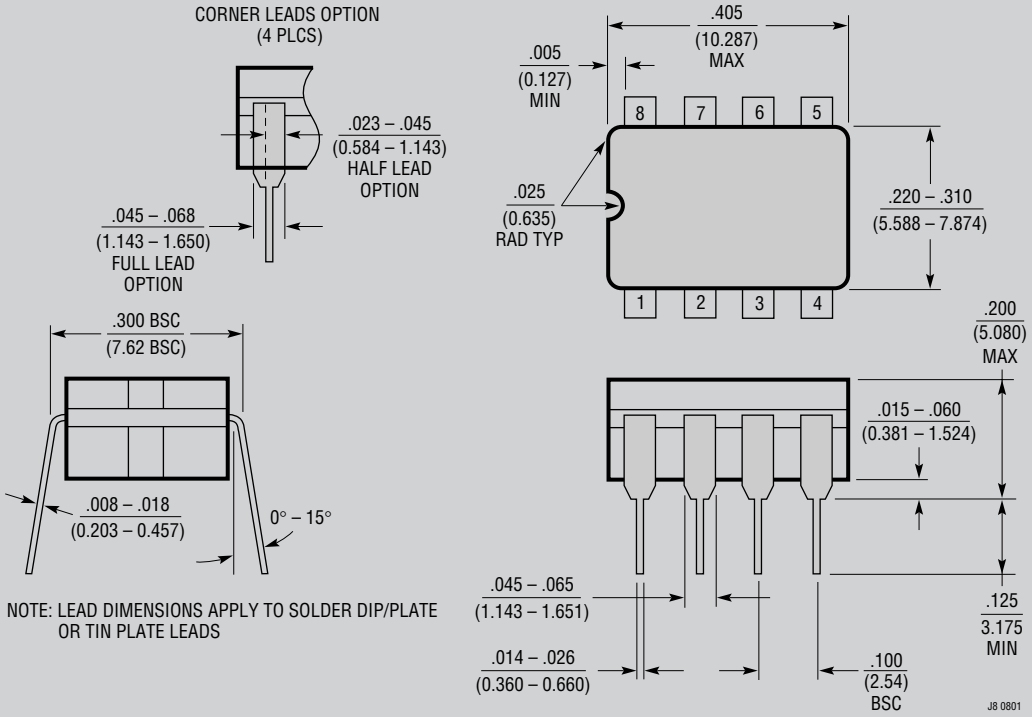

NOTE: LEAD DIMENSIONS APPLY TO SOLDER DIP/PLATE OR TIN PLATE LEADS

K Package
4-Lead TO-3 Metal Can
(Reference LTC DWG # 05-08-1311)

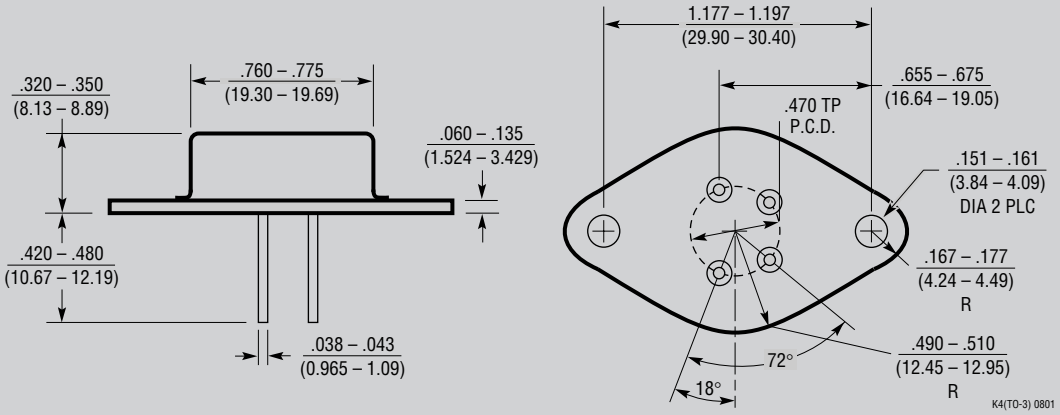

OBSOLETE PACKAGES

PACKAGE DESCRIPTION

N8 Package
8-Lead PDIP (Narrow .300 Inch)
(Reference LTC DWG # 05-08-1510)

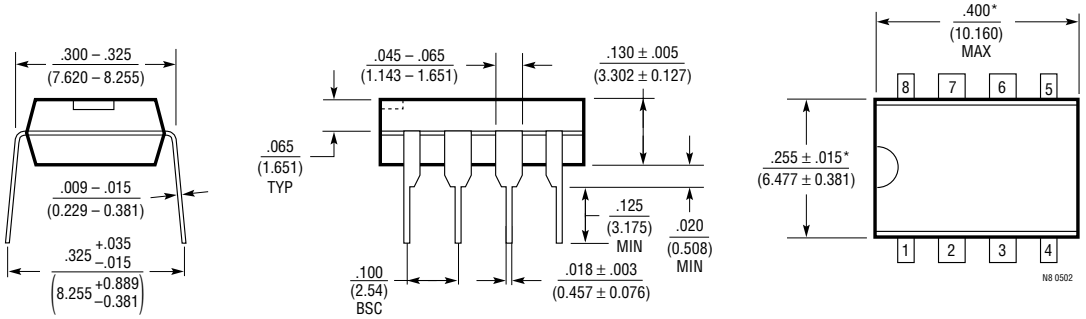

NOTE:
1. DIMENSIONS ARE $\frac{\text{INCHES}}{\text{MILLIMETERS}}$

*THESE DIMENSIONS DO NOT INCLUDE MOLD FLASH OR PROTRUSIONS.
MOLD FLASH OR PROTRUSIONS SHALL NOT EXCEED .010 INCH (0.254mm)

Q Package
5-Lead Plastic DD Pak
(Reference LTC DWG # 05-08-1461)

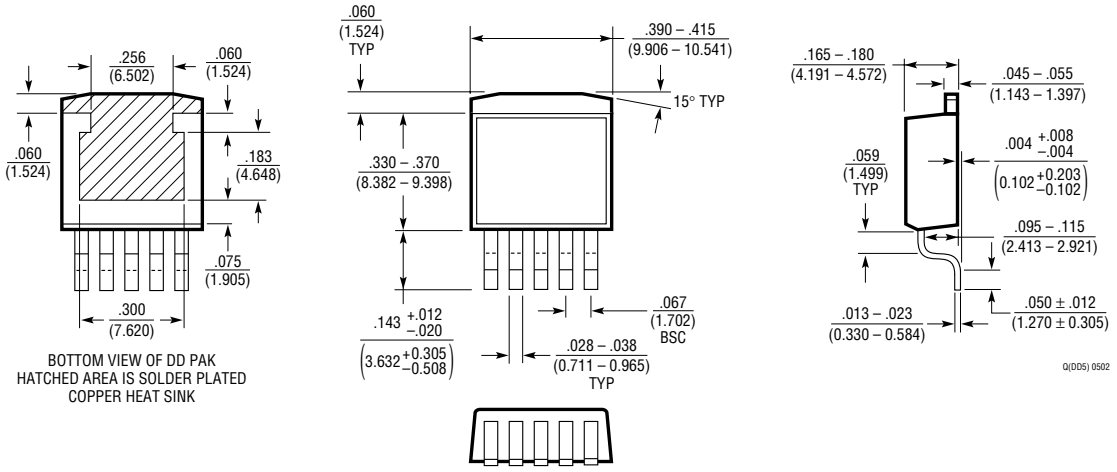

BOTTOM VIEW OF DD PAK
HATCHED AREA IS SOLDER PLATED
COPPER HEAT SINK

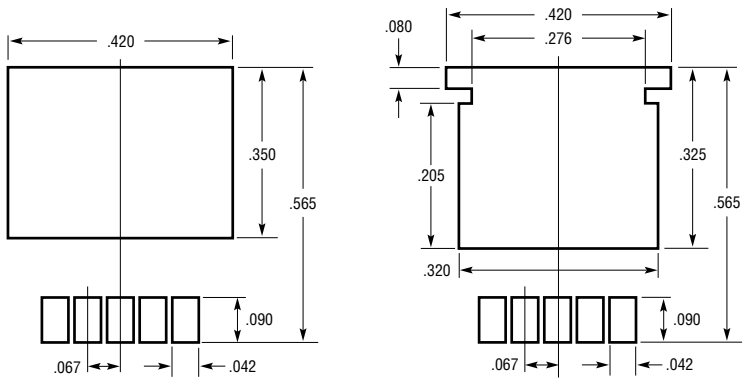

RECOMMENDED SOLDER PAD LAYOUT

RECOMMENDED SOLDER PAD LAYOUT
FOR THICKER SOLDER PASTE APPLICATIONS

NOTE:
1. DIMENSIONS IN INCH/(MILLIMETER)
2. DRAWING NOT TO SCALE

PACKAGE DESCRIPTION

S8 Package
8-Lead Plastic Small Outline (Narrow .150 Inch)
(Reference LTC DWG # 05-08-1610)

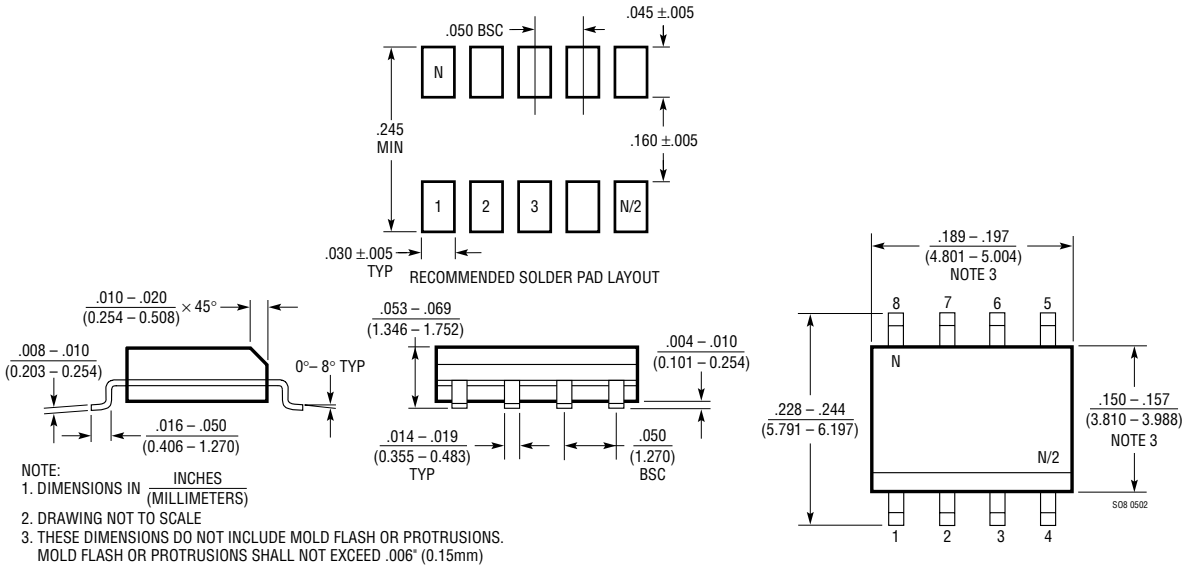

NOTE:
1. DIMENSIONS IN $\frac{\text{INCHES}}{\text{(MILLIMETERS)}}$
2. DRAWING NOT TO SCALE
3. THESE DIMENSIONS DO NOT INCLUDE MOLD FLASH OR PROTRUSIONS. MOLD FLASH OR PROTRUSIONS SHALL NOT EXCEED .006" (0.15mm)

SW Package
16-Lead Plastic Small Outline (Wide .300 Inch)
(Reference LTC DWG # 05-08-1620)

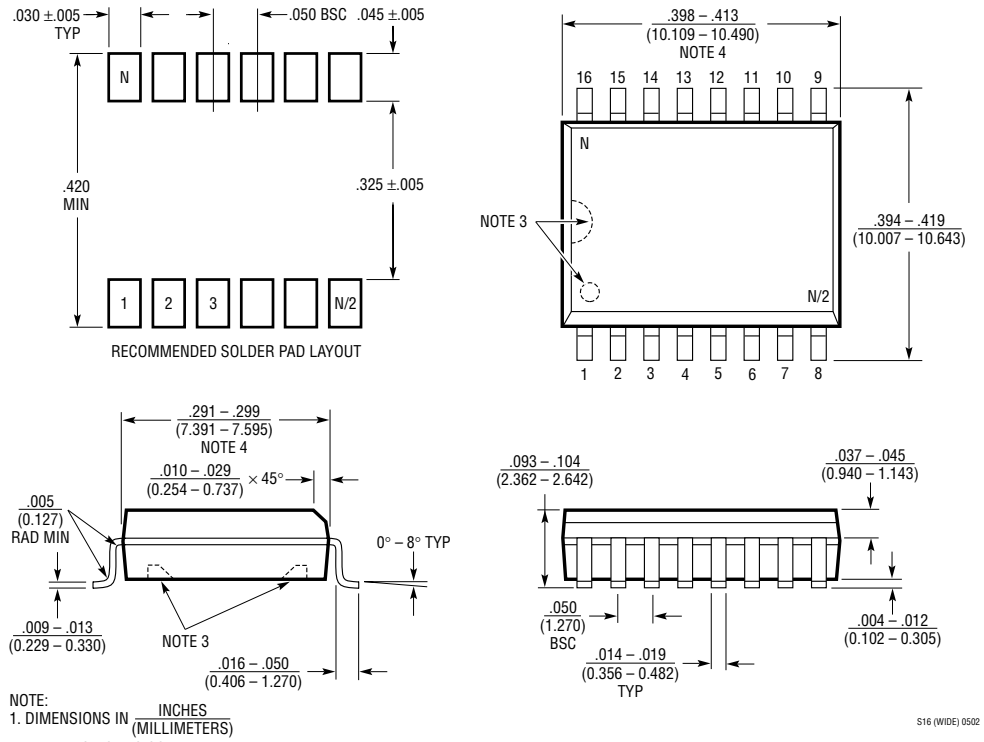

NOTE:
1. DIMENSIONS IN $\frac{\text{INCHES}}{\text{(MILLIMETERS)}}$
2. DRAWING NOT TO SCALE
3. PIN 1 IDENT, NOTCH ON TOP AND CAVITIES ON THE BOTTOM OF PACKAGES ARE THE MANUFACTURING OPTIONS. THE PART MAY BE SUPPLIED WITH OR WITHOUT ANY OF THE OPTIONS
4. THESE DIMENSIONS DO NOT INCLUDE MOLD FLASH OR PROTRUSIONS. MOLD FLASH OR PROTRUSIONS SHALL NOT EXCEED .006" (0.15mm)

PACKAGE DESCRIPTION

T Package
5-Lead Plastic TO-220 (Standard)
(Reference LTC DWG # 05-08-1421)

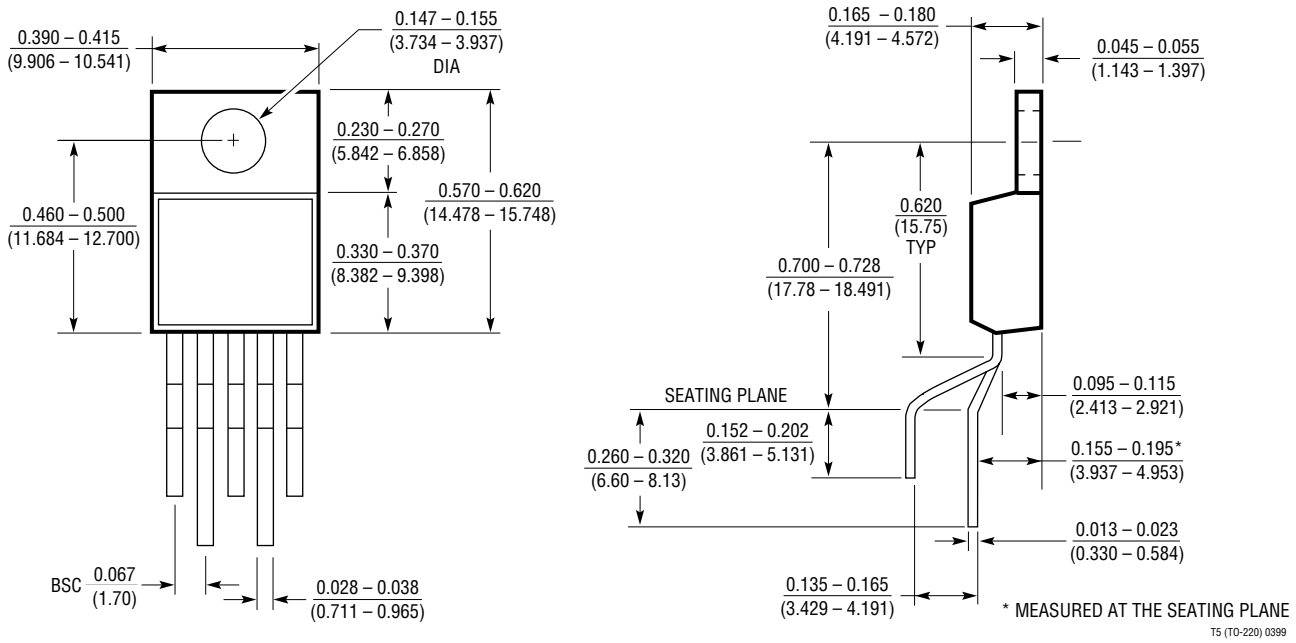

Information furnished by Linear Technology Corporation is believed to be accurate and reliable. However, no responsibility is assumed for its use. Linear Technology Corporation makes no representation that the interconnection of its circuits as described herein will not infringe on existing patent rights.

TYPICAL APPLICATION

Positive Current Boosted Buck Converter

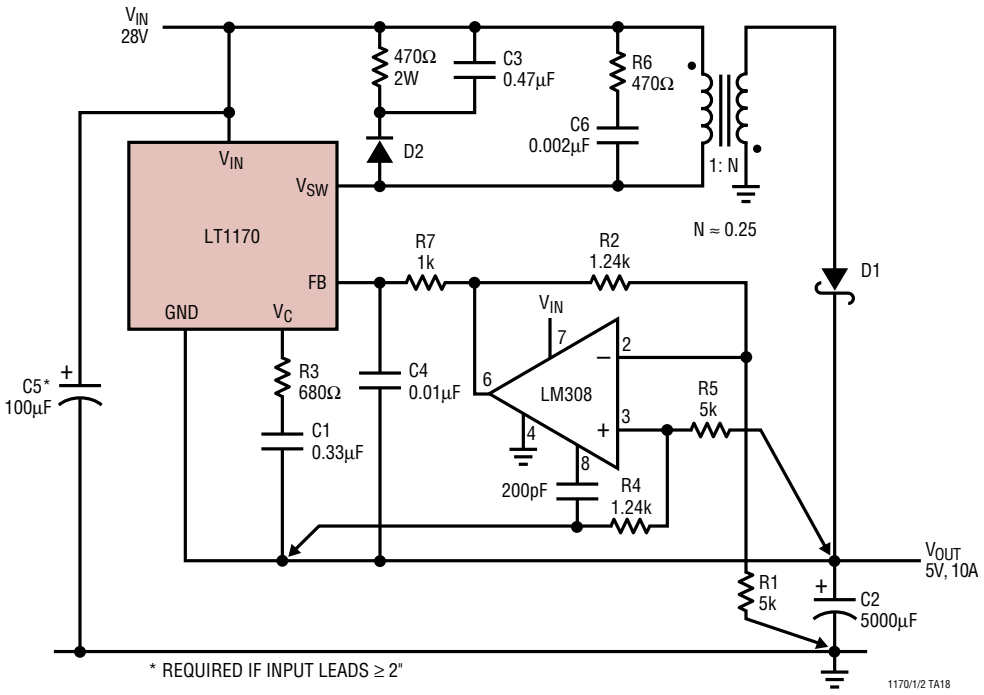

RELATED PARTS

PART NUMBER	DESCRIPTION	COMMENTS
LT1070/LT1071/LT1072	5A/2.5A/1.25A High Efficiency Switching Regulators	40kHz, V_{IN} to 60V, V_{SW} to 75V
LT1074/LT1076	5.5A/2A Step-Down Switching Regulators	100kHz, Also for Positive-to-Negative Conversion
LT1082	1A, High Voltage, High Efficiency Switching Regulator	V_{IN} to 75V, V_{SW} to 100V, Telecom
LT1268/LT1268B	7.5A, 150kHz Switching Regulators	V_{IN} to 30V, V_{SW} to 60V
LT1269/LT1271	4A High Efficiency Switching Regulators	100kHz/60kHz, V_{IN} to 30V, V_{SW} to 60V
LT1270/LT1270A	8A and 10A High Efficiency Switching Regulators	60kHz, V_{IN} to 30V, V_{SW} to 60V
LT1370	500kHz High Efficiency 6A Switching Regulator	High Power Boost, Flyback, SEPIC
LT1371	500kHz High Efficiency 3A Switching Regulator	Good for Boost, Flyback, Inverting, SEPIC
LT1372/LT1377	500kHz and 1MHz High Efficiency 1.5A Switching Regulators	Directly Regulates $\pm V_{OUT}$
LT1373	250kHz Low Supply Current High Efficiency 1.5A Switching Regulator	Low 1mA Quiescent Current
LT1374	4A, 500kHz Step-Down Switching Regulator	Synchronizable, V_{IN} to 25V
LT1375/LT1376	1.5A, 500kHz Step-Down Switching Regulators	Up to 1.25A Out from an SO-8
LT1425	Isolated Flyback Switching Regulator	6W Output, ±5% Regulation, No Optocoupler Needed
LT1507	500kHz Monolithic Buck Mode Switching Regulator	1.5A Switch, Good for 5V to 3.3V
LT1533	Ultralow Noise 1A Switching Regulator	Push-Pull, <100µV_{P-P} Output Noise

Linear Technology Corporation
1630 McCarthy Blvd., Milpitas, CA 95035-7417
(408) 432-1900 • FAX: (408) 434-0507 • www.linear.com
LT/TP 1002 1K REV F • PRINTED IN USA
© LINEAR TECHNOLOGY CORPORATION 1991