TOP242-250

TOPSwitch®-GX Family

Extended Power, Design Flexible, *EcoSmart*®, Integrated Off-line Switcher

Product Highlights

Lower System Cost, High Design Flexibility

- Extended power range for higher power applications
- No heatsink required up to 34 W using P/G packages
- Features eliminate or reduce cost of external components
- Fully integrated soft-start for minimum stress/overshoot
- Externally programmable accurate current limit
- Wider duty cycle for more power, smaller input capacitor
- Separate line sense and current limit pins on Y/R/F packages
- Line under-voltage (UV) detection: no turn off glitches
- Line overvoltage (OV) shutdown extends line surge limit
- Line feed-forward with maximum duty cycle (DC_{MAX}) reduction rejects line ripple and limits DC_{MAX} at high line
- Frequency jittering reduces EMI and EMI filtering costs
- Regulates to zero load without dummy loading
- 132 kHz frequency reduces transformer/power supply size
- Half frequency option in Y/R/F packages for video applications
- Hysteretic thermal shutdown for automatic fault recovery
- Large thermal hysteresis prevents PC board overheating

EcoSmart – Energy Efficient

- Extremely low consumption in remote off mode (80 mW at 110 VAC, 160 mW at 230 VAC)
- Frequency lowered with load for high standby efficiency
- Allows shutdown/wake-up via LAN/input port

Description

TOPSwitch-GX uses the same proven topology as *TOPSwitch*, cost effectively integrating the high voltage power MOSFET, PWM control, fault protection and other control circuitry onto a single CMOS chip. Many new functions are integrated to reduce system cost and improve design flexibility, performance and energy efficiency.

Depending on package type, either 1 or 3 additional pins over the *TOPSwitch* standard DRAIN, SOURCE and CONTROL terminals allow the following functions: line sensing (OV/UV, line feed-forward/DC_{MAX} reduction), accurate externally set current limit, remote ON/OFF, synchronization to an external lower frequency, and frequency selection (132 kHz/66 kHz).

All package types provide the following transparent features: Soft-start, 132 kHz switching frequency (automatically reduced at light load), frequency jittering for lower EMI, wider DC_{MAX}, hysteretic thermal shutdown, and larger creepage packages. In addition, all critical parameters (i.e. current limit, frequency, PWM gain) have tighter temperature and absolute tolerances to simplify design and optimize system cost.

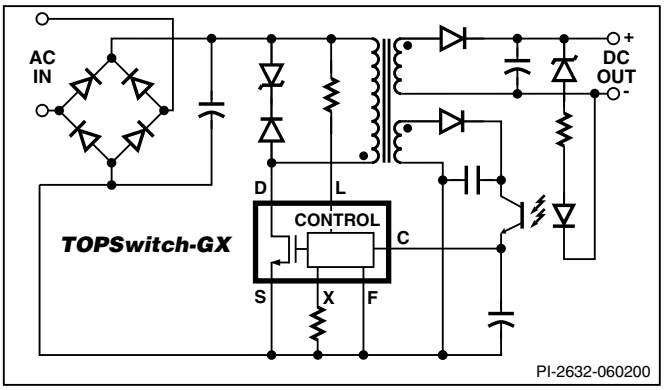

Figure 1. Typical Flyback Application.

OUTPUT POWER TABLE				
PRODUCT[3]	230 VAC ±15%[4]		85-265 VAC	
	Adapter[1]	Open Frame[2]	Adapter[1]	Open Frame[2]
TOP242 P or G	9 W	15 W	6.5 W	10 W
TOP242 R	15 W	22 W	11 W	14 W
TOP242 Y or F	10 W	22 W	7 W	14 W
TOP243 P or G	13 W	25 W	9 W	15 W
TOP243 R	29 W	45 W	17 W	23 W
TOP243 Y or F	20 W	45 W	15 W	30 W
TOP244 P or G	16 W	28 W	11 W	20 W
TOP244 R	34 W	50 W	20 W	28 W
TOP244 Y or F	30 W	65 W	20 W	45 W
TOP245 P or G	19 W	30 W	13 W	22 W
TOP245 R	37 W	57 W	23 W	33 W
TOP245 Y or F	40 W	85 W	26 W	60 W
TOP246 P or G	21 W	34 W	15 W	26 W
TOP246 R	40 W	64 W	26 W	38 W
TOP246 Y or F	60 W	125 W	40 W	90 W
TOP247 R	42 W	70 W	28 W	43 W
TOP247 Y or F	85 W	165 W	55 W	125 W
TOP248 R	43 W	75 W	30 W	48 W
TOP248 Y or F	105 W	205 W	70 W	155 W
TOP249 R	44 W	79 W	31 W	53 W
TOP249 Y or F	120 W	250 W	80 W	180 W
TOP250 R	45 W	82 W	32 W	55 W
TOP250 Y or F	135 W	290 W	90 W	210 W

Table 1. Notes: **1.** Typical continuous power in a non-ventilated enclosed adapter measured at 50 °C ambient. **2.** Maximum practical continuous power in an open frame design at 50 °C ambient. See Key Applications for detailed conditions. **3.** For lead-free package options, see Part Ordering Information. **4.** 230 VAC or 100/115 VAC with doubler.

November 2005

sales@prom-elec.com / ООО ПРОМЭЛЕКТРОНИКА

Section List

Functional Block Diagram 3
Pin Functional Description 4
***TOPSwitch-GX* Family Functional Description** 5
CONTROL (C) Pin Operation 6
Oscillator and Switching Frequency 6
Pulse Width Modulator and Maximum Duty Cycle 7
Light Load Frequency Reduction 7
Error Amplifier 7
On-Chip Current Limit with External Programmability 7
Line Under-Voltage Detection (UV) 8
Line Overvoltage Shutdown (OV) 8
Line Feed-Forward with DC_{MAX} Reduction 8
Remote ON/OFF and Synchronization 9
Soft-Start 9
Shutdown/Auto-Restart 9
Hysteretic Over-Temperature Protection 9
Bandgap Reference 10
High-Voltage Bias Current Source 10
Using Feature Pins 10
FREQUENCY (F) Pin Operation 10
LINE-SENSE (L) Pin Operation 10
EXTERNAL CURRENT LIMIT (X) Pin Operation 11
MULTI-FUNCTION (M) Pin Operation 11
Typical Uses of FREQUENCY (F) Pin 14
Typical Uses of LINE-SENSE (L) and EXTERNAL CURRENT LIMIT (X) Pins 15
Typical Uses of MULTI-FUNCTION (M) Pin 17
Application Examples 20
A High Efficiency, 30 W, Universal Input Power Supply 20
A High Efficiency, Enclosed, 70 W, Universal Adapter Supply 20
A High Efficiency, 250 W, 250-380 VDC Input Power Supply 22
Multiple Output, 60 W, 185-265 VAC Input Power Supply 23
Processor Controlled Supply Turn On/Off 24
Key Application Considerations 26
TOPSwitch-II vs. *TOPSwitch-GX* 26
TOPSwitch-FX vs. *TOPSwitch-GX* 28
TOPSwitch-GX Design Considerations 28
TOPSwitch-GX Layout Considerations 30
Quick Design Checklist 32
Design Tools 32
Product Specifications and Test Conditions 33
Typical Performance Characteristics 40
Part Ordering Information 46
Package Outlines 47

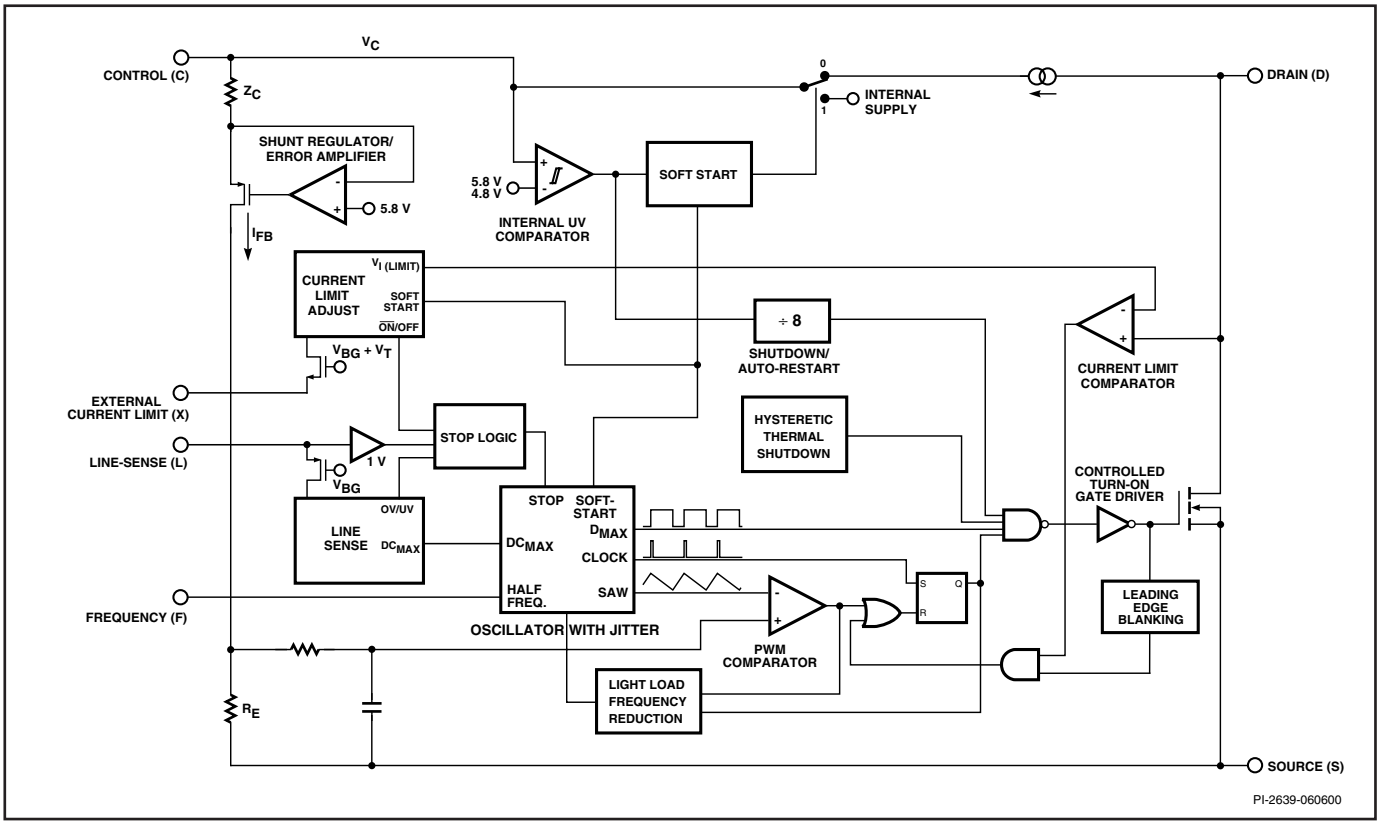

Figure 2a. Functional Block Diagram (Y, R or F Package).

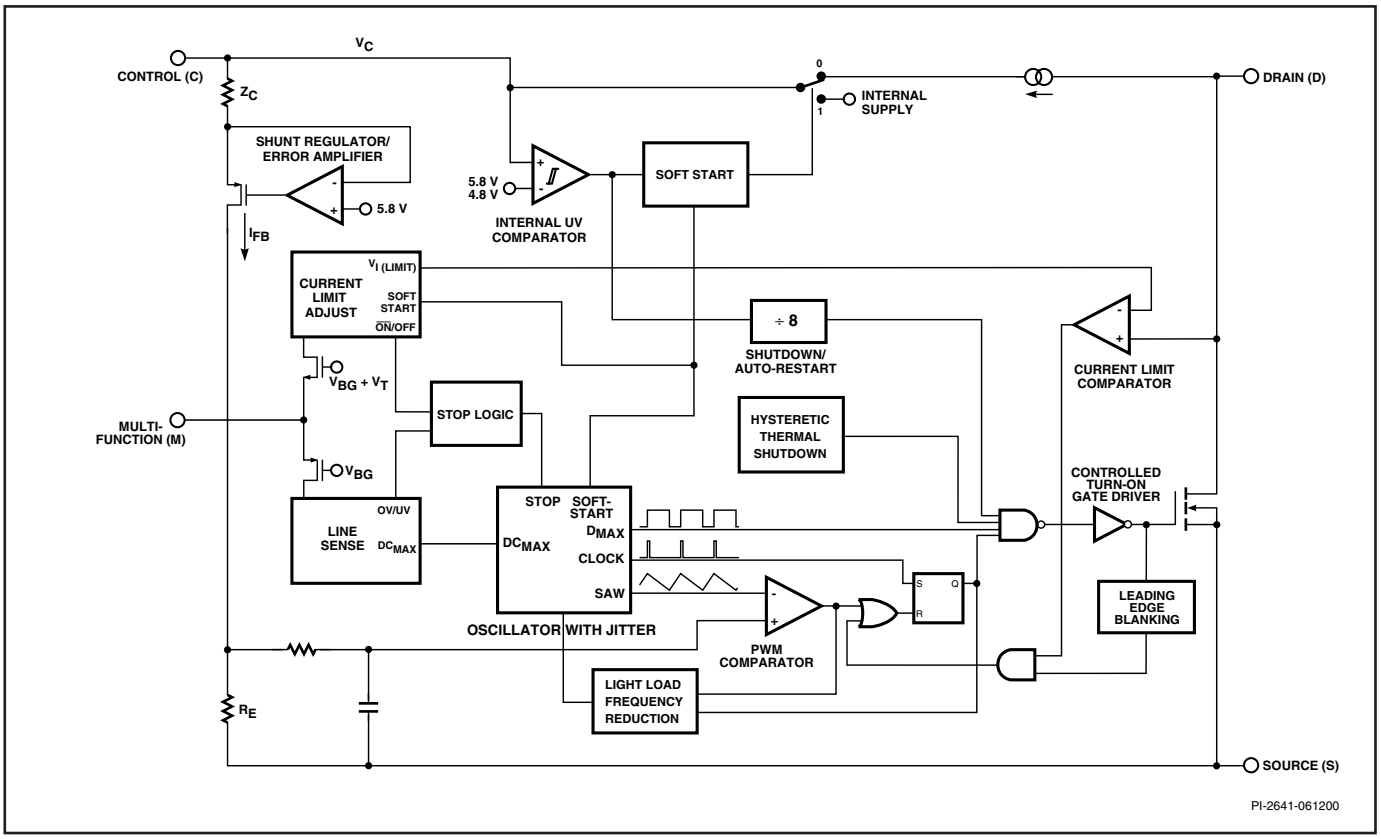

Figure 2b. Functional Block Diagram (P or G Package).

Pin Functional Description

DRAIN (D) Pin:
High voltage power MOSFET drain output. The internal start-up bias current is drawn from this pin through a switched high-voltage current source. Internal current limit sense point for drain current.

CONTROL (C) Pin:
Error amplifier and feedback current input pin for duty cycle control. Internal shunt regulator connection to provide internal bias current during normal operation. It is also used as the connection point for the supply bypass and auto-restart/compensation capacitor.

LINE-SENSE (L) Pin: (Y, R or F package only)
Input pin for OV, UV, line feed forward with DC_{MAX} reduction, remote ON/OFF and synchronization. A connection to SOURCE pin disables all functions on this pin.

EXTERNAL CURRENT LIMIT (X) Pin: (Y, R or F package only)
Input pin for external current limit adjustment, remote ON/OFF, and synchronization. A connection to SOURCE pin disables all functions on this pin.

MULTI-FUNCTION (M) Pin: (P or G package only)
This pin combines the functions of the LINE-SENSE (L) and EXTERNAL CURRENT LIMIT (X) pins of the Y package into one pin. Input pin for OV, UV, line feed forward with DC_{MAX} reduction, external current limit adjustment, remote ON/OFF and synchronization. A connection to SOURCE pin disables all functions on this pin and makes *TOPSwitch-GX* operate in simple three terminal mode (like *TOPSwitch-II*).

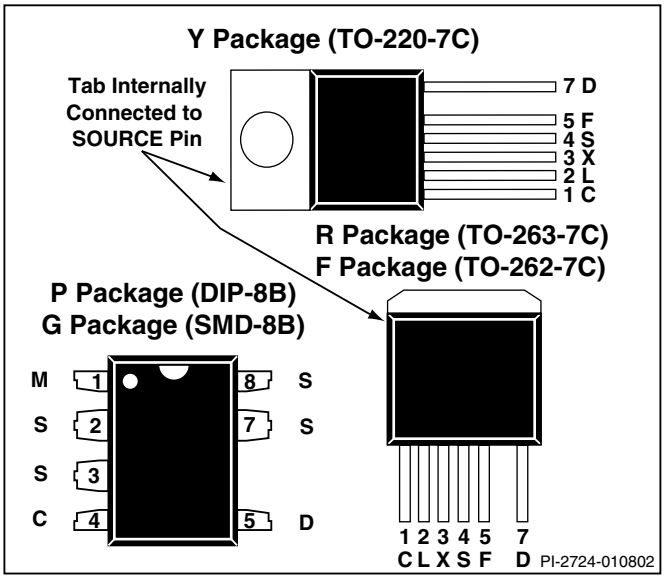

Figure 3. Pin Configuration (top view).

FREQUENCY (F) Pin: (Y, R or F package only)
Input pin for selecting switching frequency: 132 kHz if connected to SOURCE pin and 66 kHz if connected to CONTROL pin. The switching frequency is internally set for fixed 132 kHz operation in P and G packages.

SOURCE (S) Pin:
Output MOSFET source connection for high voltage power return. Primary side control circuit common and reference point.

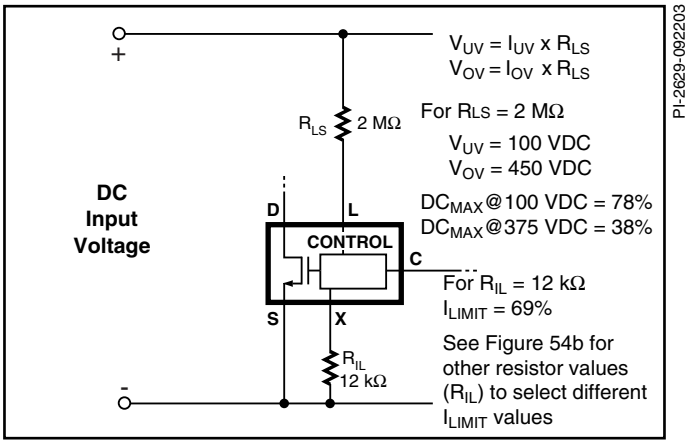

Figure 4. Y/R/F Pkg Line Sense and Externally Set Current Limit.

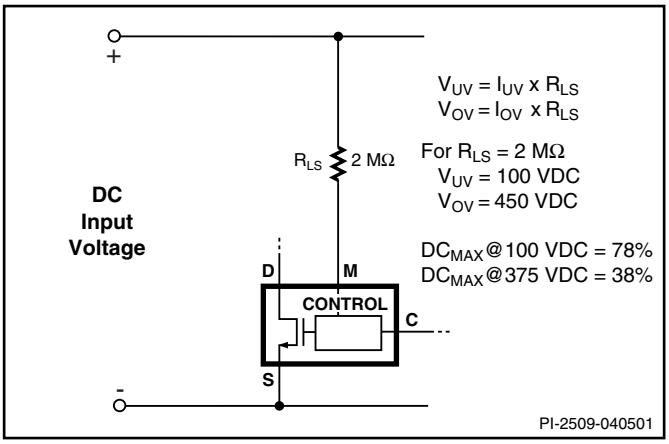

Figure 5. P/G Package Line Sense.

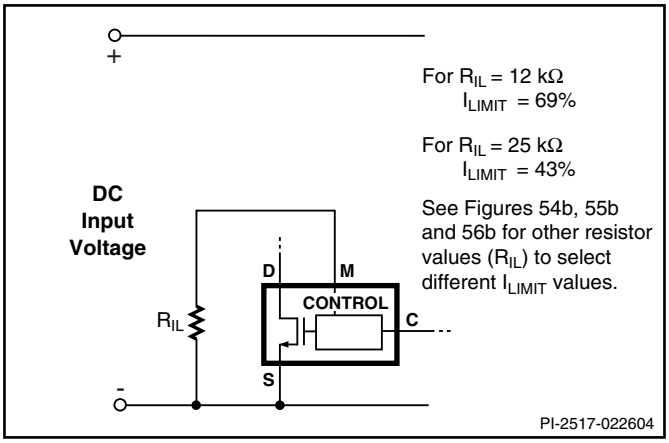

Figure 6. P/G Package Externally Set Current Limit.

TOPSwitch-GX Family Functional Description

Like *TOPSwitch*, *TOPSwitch-GX* is an integrated switched mode power supply chip that converts a current at the control input to a duty cycle at the open drain output of a high voltage power MOSFET. During normal operation the duty cycle of the power MOSFET decreases linearly with increasing CONTROL pin current as shown in Figure 7.

In addition to the three terminal *TOPSwitch* features, such as the high voltage start-up, the cycle-by-cycle current limiting, loop compensation circuitry, auto-restart, thermal shutdown, the *TOPSwitch-GX* incorporates many additional functions that reduce system cost, increase power supply performance and design flexibility. A patented high voltage CMOS technology allows both the high voltage power MOSFET and all the low voltage control circuitry to be cost effectively integrated onto a single monolithic chip.

Three terminals, FREQUENCY, LINE-SENSE, and EXTERNAL CURRENT LIMIT (available in Y, R or F package) or one terminal MULTI-FUNCTION (available in P or G package) have been added to implement some of the new functions. These terminals can be connected to the SOURCE pin to operate the *TOPSwitch-GX* in a *TOPSwitch*-like three terminal mode. However, even in this three terminal mode, the *TOPSwitch-GX* offers many new transparent features that do not require any external components:

1. A fully integrated 10 ms soft-start limits peak currents and voltages during start-up and dramatically reduces or eliminates output overshoot in most applications.
2. DC_{MAX} of 78% allows smaller input storage capacitor, lower input voltage requirement and/or higher power capability.
3. Frequency reduction at light loads lowers the switching losses and maintains good cross regulation in multiple output supplies.
4. Higher switching frequency of 132 kHz reduces the transformer size with no noticeable impact on EMI.
5. Frequency jittering reduces EMI.
6. Hysteretic over-temperature shutdown ensures automatic recovery from thermal fault. Large hysteresis prevents circuit board overheating.
7. Packages with omitted pins and lead forming provide large drain creepage distance.
8. Tighter absolute tolerances and smaller temperature variations on switching frequency, current limit and PWM gain.

The LINE-SENSE (L) pin is usually used for line sensing by connecting a resistor from this pin to the rectified DC high voltage bus to implement line overvoltage (OV), under-voltage (UV) and line feed-forward with DC_{MAX} reduction. In this mode, the value of the resistor determines the OV/UV thresholds and the DC_{MAX} is reduced linearly starting from a line voltage above the under-voltage threshold. See Table 2 and Figure 11.

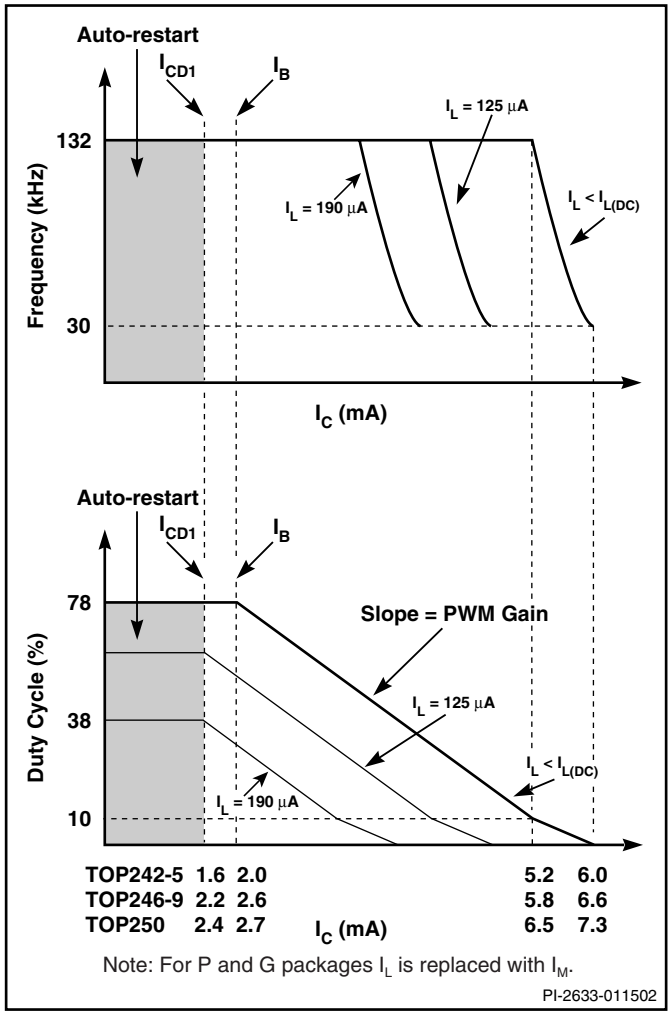

Figure 7. Relationship of Duty Cycle and Frequency to CONTROL Pin Current.

The pin can also be used as a remote ON/OFF and a synchronization input.

The EXTERNAL CURRENT LIMIT (X) pin is usually used to reduce the current limit externally to a value close to the operating peak current, by connecting the pin to SOURCE through a resistor. This pin can also be used as a remote ON/OFF and a synchronization input in both modes. See Table 2 and Figure 11.

For the P or G packages the LINE-SENSE and EXTERNAL CURRENT LIMIT pin functions are combined on one MULTI-FUNCTION (M) pin. However, some of the functions become mutually exclusive as shown in Table 3.

The FREQUENCY (F) pin in the Y, R or F package sets the switching frequency to the default value of 132 kHz when connected to SOURCE pin. A half frequency option of 66 kHz can be chosen by connecting this pin to CONTROL pin instead. Leaving this pin open is not recommended.

CONTROL (C) Pin Operation

The CONTROL pin is a low impedance node that is capable of receiving a combined supply and feedback current. During normal operation, a shunt regulator is used to separate the feedback signal from the supply current. CONTROL pin voltage V_C is the supply voltage for the control circuitry including the MOSFET gate driver. An external bypass capacitor closely connected between the CONTROL and SOURCE pins is required to supply the instantaneous gate drive current. The total amount of capacitance connected to this pin also sets the auto-restart timing as well as control loop compensation.

When rectified DC high voltage is applied to the DRAIN pin during start-up, the MOSFET is initially off, and the CONTROL pin capacitor is charged through a switched high voltage current source connected internally between the DRAIN and CONTROL pins. When the CONTROL pin voltage V_C reaches approximately 5.8 V, the control circuitry is activated and the soft-start begins. The soft-start circuit gradually increases the duty cycle of the MOSFET from zero to the maximum value over approximately 10 ms. If no external feedback/supply current is fed into the CONTROL pin by the end of the soft-start, the high voltage current source is turned off and the CONTROL pin will start discharging in response to the supply current drawn by the control circuitry. If the power supply is designed properly, and no fault condition such as open loop or shorted output exists, the feedback loop will close, providing external CONTROL pin current, before the CONTROL pin voltage has had a chance to discharge to the lower threshold voltage of approximately 4.8 V (internal supply under-voltage lockout threshold). When the externally fed current charges the CONTROL pin to the shunt regulator voltage of 5.8 V, current in excess of the consumption of the chip is shunted to SOURCE through resistor R_E as shown in Figure 2. This current flowing through R_E controls the duty cycle of the power MOSFET to provide closed loop regulation. The shunt regulator has a finite low output impedance Z_C that sets the gain of the error amplifier when used in a primary feedback configuration. The dynamic impedance Z_C of the CONTROL pin together with the external CONTROL pin capacitance sets the dominant pole for the control loop.

When a fault condition such as an open loop or shorted output prevents the flow of an external current into the CONTROL pin, the capacitor on the CONTROL pin discharges towards 4.8 V. At 4.8 V, auto-restart is activated which turns the output MOSFET off and puts the control circuitry in a low current standby mode. The high-voltage current source turns on and charges the external capacitance again. A hysteretic internal supply under-voltage comparator keeps V_C within a window of typically 4.8 V to 5.8 V by turning the high-voltage current source on and off as shown in Figure 8. The auto-restart circuit has a divide-by-eight counter which prevents the output MOSFET from turning on again until eight discharge/charge cycles have elapsed. This is accomplished by enabling the output MOSFET only when the divide-by-eight counter reaches full count (S7). The counter effectively limits *TOPSwitch-GX* power dissipation by reducing the auto-restart duty cycle to typically 4%. Auto-restart mode continues until output voltage regulation is again achieved through closure of the feedback loop.

Oscillator and Switching Frequency

The internal oscillator linearly charges and discharges an

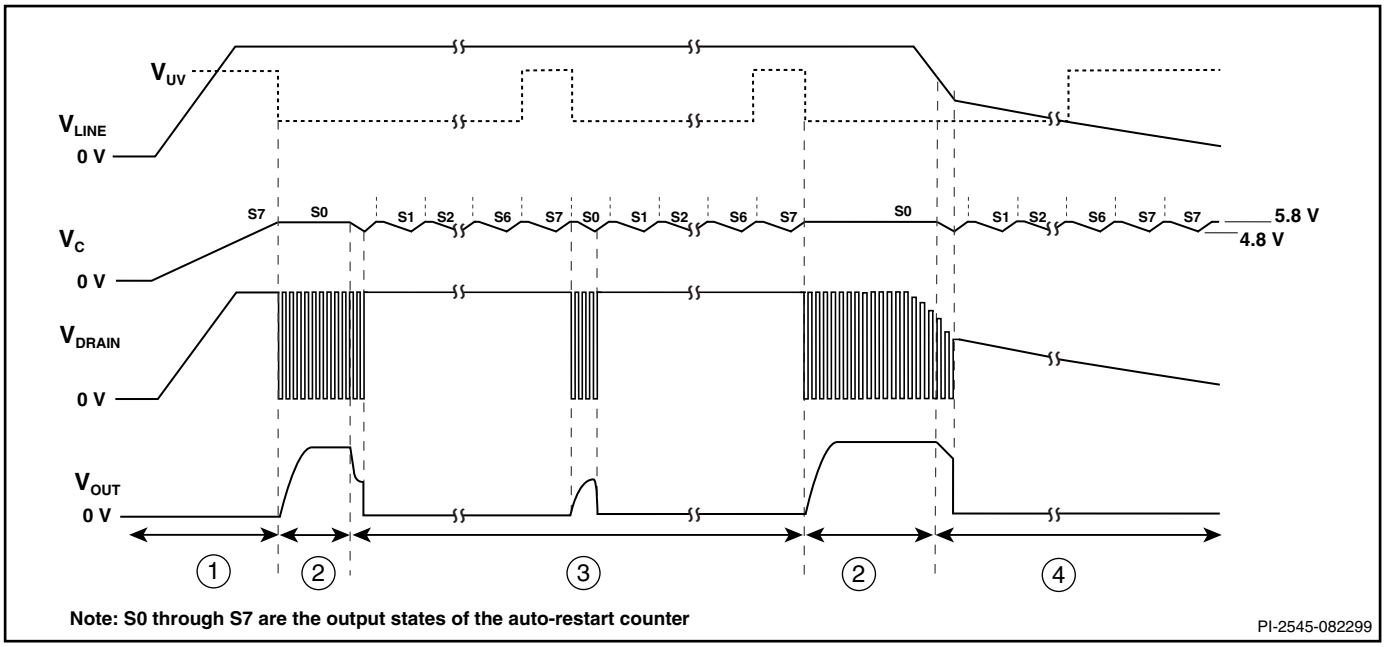

Figure 8. Typical Waveforms for (1) Power Up (2) Normal Operation (3) Auto-Restart (4) Power Down.

internal capacitance between two voltage levels to create a sawtooth waveform for the pulse width modulator. This oscillator sets the pulse width modulator/current limit latch at the beginning of each cycle.

The nominal switching frequency of 132 kHz was chosen to minimize transformer size while keeping the fundamental EMI frequency below 150 kHz. The FREQUENCY pin (available only in Y, R or F package), when shorted to the CONTROL pin, lowers the switching frequency to 66 kHz (half frequency) which may be preferable in some cases such as noise sensitive video applications or a high efficiency standby mode. Otherwise, the FREQUENCY pin should be connected to the SOURCE pin for the default 132 kHz.

To further reduce the EMI level, the switching frequency is jittered (frequency modulated) by approximately ±4 kHz at 250 Hz (typical) rate as shown in Figure 9. Figure 46 shows the typical improvement of EMI measurements with frequency jitter.

Pulse Width Modulator and Maximum Duty Cycle

The pulse width modulator implements voltage mode control by driving the output MOSFET with a duty cycle inversely proportional to the current into the CONTROL pin that is in excess of the internal supply current of the chip (see Figure 7). The excess current is the feedback error signal that appears across R_E (see Figure 2). This signal is filtered by an RC network with a typical corner frequency of 7 kHz to reduce the effect of switching noise in the chip supply current generated by the MOSFET gate driver. The filtered error signal is compared with the internal oscillator sawtooth waveform to generate the duty cycle waveform. As the control current increases, the duty cycle decreases. A clock signal from the oscillator sets a latch which turns on the output MOSFET. The pulse width modulator resets the latch, turning off the output MOSFET. Note that a minimum current must be driven into the CONTROL pin before the duty cycle begins to change.

The maximum duty cycle, DC_{MAX}, is set at a default maximum value of 78% (typical). However, by connecting the LINE-SENSE or MULTI-FUNCTION pin (depending on the package) to the rectified DC high voltage bus through a resistor with appropriate value, the maximum duty cycle can be made to decrease from 78% to 38% (typical) as shown in Figure 11 when input line voltage increases (see line feed forward with DC_{MAX} reduction).

Light Load Frequency Reduction

The pulse width modulator duty cycle reduces as the load at the power supply output decreases. This reduction in duty cycle is proportional to the current flowing into the CONTROL pin. As the CONTROL pin current increases, the duty cycle decreases linearly towards a duty cycle of 10%. Below 10% duty cycle, to maintain high efficiency at light loads, the

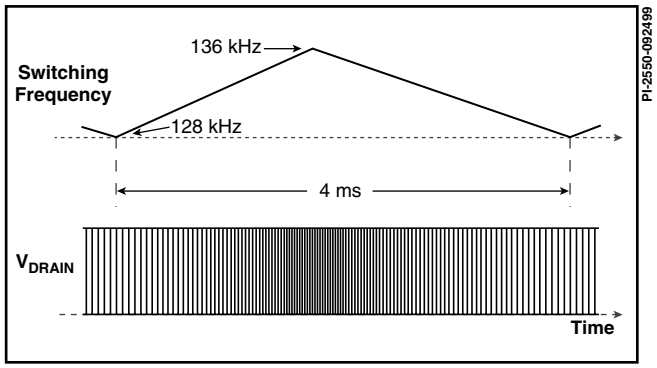

Figure 9. Switching Frequency Jitter (Idealized V_{DRAIN} Waveforms).

frequency is also reduced linearly until a minimum frequency is reached at a duty cycle of 0% (refer to Figure 7). The minimum frequency is typically 30 kHz and 15 kHz for 132 kHz and 66 kHz operation, respectively.

This feature allows a power supply to operate at lower frequency at light loads thus lowering the switching losses while maintaining good cross regulation performance and low output ripple.

Error Amplifier

The shunt regulator can also perform the function of an error amplifier in primary side feedback applications. The shunt regulator voltage is accurately derived from a temperature-compensated bandgap reference. The gain of the error amplifier is set by the CONTROL pin dynamic impedance. The CONTROL pin clamps external circuit signals to the V_C voltage level. The CONTROL pin current in excess of the supply current is separated by the shunt regulator and flows through R_E as a voltage error signal.

On-Chip Current Limit with External Programmability

The cycle-by-cycle peak drain current limit circuit uses the output MOSFET ON-resistance as a sense resistor. A current limit comparator compares the output MOSFET on-state drain to source voltage, $V_{DS(ON)}$ with a threshold voltage. High drain current causes $V_{DS(ON)}$ to exceed the threshold voltage and turns the output MOSFET off until the start of the next clock cycle. The current limit comparator threshold voltage is temperature compensated to minimize the variation of the current limit due to temperature related changes in $R_{DS(ON)}$ of the output MOSFET. The default current limit of *TOPSwitch-GX* is preset internally. However, with a resistor connected between EXTERNAL CURRENT LIMIT (X) pin (Y, R or F package) or MULTI-FUNCTION (M) pin (P or G package) and SOURCE pin, current limit can be programmed externally to a lower level between 30% and 100% of the default current limit. Please refer to the graphs in the typical performance characteristics section for the selection of the resistor value. By setting current limit low, a larger *TOPSwitch-GX* than necessary for the power

required can be used to take advantage of the lower $R_{DS(ON)}$ for higher efficiency/smaller heat sinking requirements. With a second resistor connected between the EXTERNAL CURRENT LIMIT (X) pin (Y, R or F package) or MULTI-FUNCTION (M) pin (P or G package) and the rectified DC high voltage bus, the current limit is reduced with increasing line voltage, allowing a true power limiting operation against line variation to be implemented. When using an RCD clamp, this power limiting technique reduces maximum clamp voltage at high line. This allows for higher reflected voltage designs as well as reducing clamp dissipation.

The leading edge blanking circuit inhibits the current limit comparator for a short time after the output MOSFET is turned on. The leading edge blanking time has been set so that, if a power supply is designed properly, current spikes caused by primary-side capacitances and secondary-side rectifier reverse recovery time should not cause premature termination of the switching pulse.

The current limit is lower for a short period after the leading edge blanking time as shown in Figure 52. This is due to dynamic characteristics of the MOSFET. To avoid triggering the current limit in normal operation, the drain current waveform should stay within the envelope shown.

Line Under-Voltage Detection (UV)

At power up, UV keeps *TOPSwitch-GX* off until the input line voltage reaches the under-voltage threshold. At power down, UV prevents auto-restart attempts after the output goes out of regulation. This eliminates power down glitches caused by slow discharge of the large input storage capacitor present in applications such as standby supplies. A single resistor connected from the LINE-SENSE pin (Y, R or F package) or MULTI-FUNCTION pin (P or G package) to the rectified DC high voltage bus sets UV threshold during power up. Once the power supply is successfully turned on, the UV threshold is lowered to 40% of the initial UV threshold to allow extended input voltage operating range (UV low threshold). If the UV low threshold is reached during operation without the power supply losing regulation, the device will turn off and stay off until UV (high threshold) has been reached again. If the power supply loses regulation before reaching the UV low threshold, the device will enter auto-restart. At the end of each auto-restart cycle (S7), the UV comparator is enabled. If the UV high threshold is not exceeded the MOSFET will be disabled during the next cycle (see Figure 8). The UV feature can be disabled independent of the OV feature as shown in Figures 19 and 23.

Line Overvoltage Shutdown (OV)

The same resistor used for UV also sets an overvoltage threshold which, once exceeded, will force *TOPSwitch-GX* output into off-state. The ratio of OV and UV thresholds is preset at 4.5 as can be seen in Figure 11. When the MOSFET is off, the rectified DC high voltage surge capability is increased to the voltage rating of the MOSFET (700 V), due to the absence of the reflected voltage and leakage spikes on the drain. A small amount of hysteresis is provided on the OV threshold to prevent noise triggering. The OV feature can be disabled independent of the UV feature as shown in Figures 18 and 32.

Line Feed-Forward with DC_{MAX} Reduction

The same resistor used for UV and OV also implements line voltage feed-forward, which minimizes output line ripple and reduces power supply output sensitivity to line transients. This feed-forward operation is illustrated in Figure 7 by the different values of I_L (Y, R or F package) or I_M (P or G package). Note that for the same CONTROL pin current, higher line voltage results in smaller operating duty cycle. As an added

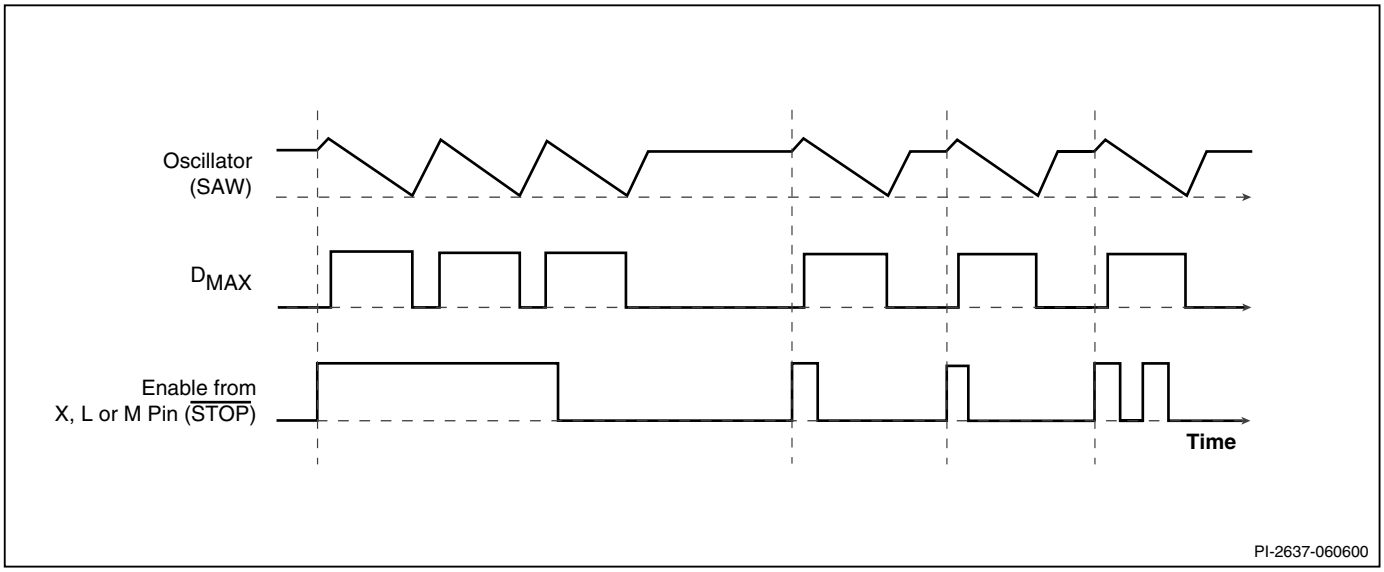

Figure 10. Synchronization Timing Diagram.

feature, the maximum duty cycle DC_{MAX} is also reduced from 78% (typical) at a voltage slightly higher than the UV threshold to 30% (typical) at the OV threshold (see Figure 11). Limiting DC_{MAX} at higher line voltages helps prevent transformer saturation due to large load transients in TOP248, TOP249 and TOP250 forward converter applications. DC_{MAX} of 38% at high line was chosen to ensure that the power capability of the *TOPSwitch-GX* is not restricted by this feature under normal operation.

Remote ON/OFF and Synchronization

TOPSwitch-GX can be turned on or off by controlling the current into the LINE-SENSE pin or out from the EXTERNAL CURRENT LIMIT pin (Y, R or F package) and into or out from the MULTI-FUNCTION pin (P or G package) (see Figure 11). In addition, the LINE-SENSE pin has a 1 V threshold comparator connected at its input. This voltage threshold can also be used to perform remote ON/OFF control. This allows easy implementation of remote ON/OFF control of *TOPSwitch-GX* in several different ways. A transistor or an optocoupler output connected between the EXTERNAL CURRENT LIMIT or LINE-SENSE pins (Y, R or F package) or the MULTI-FUNCTION pin (P or G package) and the SOURCE pin implements this function with "active-on" (Figures 22, 29 and 36) while a transistor or an optocoupler output connected between the LINE-SENSE pin (Y, R or F package) or the MULTI-FUNCTION (P or G package) pin and the CONTROL pin implements the function with "active-off" (Figures 23 and 37).

When a signal is received at the LINE-SENSE pin or the EXTERNAL CURRENT LIMIT pin (Y, R or F package) or the MULTI-FUNCTION pin (P or G package) to disable the output through any of the pin functions such as OV, UV and remote ON/OFF, *TOPSwitch-GX* always completes its current switching cycle, as illustrated in Figure 10, before the output is forced off. The internal oscillator is stopped slightly before the end of the current cycle and stays there as long as the disable signal exists. When the signal at the above pins changes state from disable to enable, the internal oscillator starts the next switching cycle. This approach allows the use of these pins to synchronize *TOPSwitch-GX* to any external signal with a frequency between its internal switching frequency and 20 kHz.

As seen above, the remote ON/OFF feature allows the *TOPSwitch-GX* to be turned on and off instantly, on a cycle-by-cycle basis, with very little delay. However, remote ON/OFF can also be used as a standby or power switch to turn off the *TOPSwitch-GX* and keep it in a very low power consumption state for indefinitely long periods. If the *TOPSwitch-GX* is held in remote off state for long enough time to allow the CONTROL pin to discharge to the internal supply under-voltage threshold of 4.8 V (approximately 32 ms for a 47 µF CONTROL pin capacitance), the CONTROL pin goes into the hysteretic mode of regulation. In this mode, the CONTROL pin goes through alternate charge and discharge cycles between 4.8 V and 5.8 V (see CONTROL pin operation section above) and runs entirely off the high voltage DC input, but with very low power consumption (160 mW typical at 230 VAC with M or X pins open). When the *TOPSwitch-GX* is remotely turned on after entering this mode, it will initiate a normal start-up sequence with soft-start the next time the CONTROL pin reaches 5.8 V. In the worst case, the delay from remote on to start-up can be equal to the full discharge/charge cycle time of the CONTROL pin, which is approximately 125 ms for a 47 µF CONTROL pin capacitor. This reduced consumption remote off mode can eliminate expensive and unreliable in-line mechanical switches. It also allows for microprocessor controlled turn-on and turn-off sequences that may be required in certain applications such as inkjet and laser printers.

Soft-Start

Two on-chip soft-start functions are activated at start-up with a duration of 10 ms (typical). Maximum duty cycle starts from 0% and linearly increases to the default maximum of 78% at the end of the 10 ms duration and the current limit starts from about 85% and linearly increases to 100% at the end of the 10 ms duration. In addition to start-up, soft-start is also activated at each restart attempt during auto-restart and when restarting after being in hysteretic regulation of CONTROL pin voltage (V_C), due to remote OFF or thermal shutdown conditions. This effectively minimizes current and voltage stresses on the output MOSFET, the clamp circuit and the output rectifier during start-up. This feature also helps minimize output overshoot and prevents saturation of the transformer during start-up.

Shutdown/Auto-Restart

To minimize *TOPSwitch-GX* power dissipation under fault conditions, the shutdown/auto-restart circuit turns the power supply on and off at an auto-restart duty cycle of typically 4% if an out of regulation condition persists. Loss of regulation interrupts the external current into the CONTROL pin. V_C regulation changes from shunt mode to the hysteretic auto-restart mode as described in CONTROL pin operation section. When the fault condition is removed, the power supply output becomes regulated, V_C regulation returns to shunt mode, and normal operation of the power supply resumes.

Hysteretic Over-Temperature Protection

Temperature protection is provided by a precision analog circuit that turns the output MOSFET off when the junction temperature exceeds the thermal shutdown temperature (140 °C typical). When the junction temperature cools to below the hysteretic temperature, normal operation resumes providing automatic recovery. A large hysteresis of 70 °C (typical) is provided to prevent overheating of the PC board due to a continuous fault condition. V_C is regulated in hysteretic mode and a 4.8 V to 5.8 V (typical) sawtooth waveform is present on the CONTROL pin while in thermal shutdown.

Bandgap Reference
All critical *TOPSwitch-GX* internal voltages are derived from a temperature-compensated bandgap reference. This reference is also used to generate a temperature-compensated current reference, which is trimmed to accurately set the switching frequency, MOSFET gate drive current, current limit, and the line OV/UV thresholds. *TOPSwitch-GX* has improved circuitry to maintain all of the above critical parameters within very tight absolute and temperature tolerances.

High-Voltage Bias Current Source
This current source biases *TOPSwitch-GX* from the DRAIN pin and charges the CONTROL pin external capacitance during start-up or hysteretic operation. Hysteretic operation occurs during auto-restart, remote OFF and over-temperature shutdown. In this mode of operation, the current source is switched on and off with an effective duty cycle of approximately 35%. This duty cycle is determined by the ratio of CONTROL pin charge (I_C) and discharge currents (I_{CD1} and I_{CD2}). This current source is turned off during normal operation when the output MOSFET is switching. The effect of the current source switching will be seen on the DRAIN voltage waveform as small disturbances and is normal.

Using Feature Pins

FREQUENCY (F) Pin Operation
The FREQUENCY pin is a digital input pin available in the Y, R or F package only. Shorting the FREQUENCY pin to SOURCE pin selects the nominal switching frequency of 132 kHz (Figure 13), which is suited for most applications. For other cases that may benefit from lower switching frequency such as noise sensitive video applications, a 66 kHz switching frequency (half frequency) can be selected by shorting the FREQUENCY pin to the CONTROL pin (Figure 14). In addition, an example circuit shown in Figure 15 may be used to lower the switching frequency from 132 kHz in normal operation to 66 kHz in standby mode for very low standby power consumption.

LINE-SENSE (L) Pin Operation (Y, R and F Packages)
When current is fed into the LINE-SENSE pin, it works as a voltage source of approximately 2.6 V up to a maximum current of +400 µA (typical). At +400 µA, this pin turns into a constant current sink. Refer to Figure 12a. In addition, a comparator with a threshold of 1 V is connected at the pin and is used to detect when the pin is shorted to the SOURCE pin.

There are a total of four functions available through the use of the LINE-SENSE pin: OV, UV, line feed-forward with DC_{MAX} reduction, and remote ON/OFF. Connecting the LINE-SENSE pin to the SOURCE pin disables all four functions. The LINE-SENSE pin is typically used for line sensing by connecting a resistor from this pin to the rectified DC high voltage bus to implement OV, UV and DC_{MAX} reduction with line voltage. In this mode, the value of the resistor determines the line OV/UV thresholds, and the DC_{MAX} is reduced linearly with rectified DC high voltage starting from just above the UV threshold. The pin can also be used as a remote ON/OFF and a synchronization input. Refer to Table 2 for possible combinations of the functions with example circuits shown in Figure 16 through Figure 40. A description of specific functions in terms of the LINE-SENSE pin I/V characteristic is shown in Figure 11 (right hand side). The horizontal axis represents LINE-SENSE pin current with positive polarity indicating currents flowing into the pin. The meaning of the vertical axes varies with functions. For those that control the ON/OFF states of the output such as UV, OV and remote ON/OFF, the vertical axis represents the enable/disable states of the output. UV triggers at I_{UV} (+50 µA typical with 30 µA hysteresis) and OV triggers at I_{OV} (+225 µA typical with 8 µA hysteresis). Between the UV and OV thresholds, the output is enabled. For line feed-forward with

LINE-SENSE AND EXTERNAL CURRENT LIMIT PIN TABLE*

Figure Number ▶	16	17	18	19	20	21	22	23	24	25	26	27	28	29
Three Terminal Operation	✓													
Under-Voltage		✓	✓								✓	✓	✓	
Overvoltage		✓		✓							✓	✓	✓	
Line Feed-Forward (DC_{MAX})		✓									✓	✓	✓	
Overload Power Limiting						✓								
External Current Limit					✓	✓			✓	✓		✓	✓	
Remote ON/OFF							✓	✓	✓	✓	✓	✓		✓

*This table is only a partial list of many LINE-SENSE and EXTERNAL CURRENT LIMIT pin configurations that are possible.

Table 2. Typical LINE-SENSE and EXTERNAL CURRENT LIMIT Pin Configurations.

DC_{MAX} reduction, the vertical axis represents the magnitude of the DC_{MAX}. Line feed-forward with DC_{MAX} reduction lowers maximum duty cycle from 78% at $I_{L(DC)}$ (+60 µA typical) to 38% at I_{OV} (+225 µA).

EXTERNAL CURRENT LIMIT (X) Pin Operation (Y, R and F Packages)

When current is drawn out of the EXTERNAL CURRENT LIMIT pin, it works as a voltage source of approximately 1.3 V up to a maximum current of -240 µA (typical). At -240 µA, it turns into a constant current source (refer to Figure 12a).

There are two functions available through the use of the EXTERNAL CURRENT LIMIT pin: external current limit and remote ON/OFF. Connecting the EXTERNAL CURRENT LIMIT pin to the SOURCE pin disables the two functions. In high efficiency applications, this pin can be used to reduce the current limit externally to a value close to the operating peak current by connecting the pin to the SOURCE pin through a resistor. The pin can also be used for remote ON/OFF. Table 2 shows several possible combinations using this pin. See Figure 11 for a description of the functions where the horizontal axis (left hand side) represents the EXTERNAL CURRENT LIMIT pin current. The meaning of the vertical axes varies with function. For those that control the ON/OFF states of the output such as remote ON/OFF, the vertical axis represents the enable/disable states of the output. For external current limit, the vertical axis represents the magnitude of the I_{LIMIT}. Please see graphs in the Typical Performance Characteristics section for the current limit programming range and the selection of appropriate resistor value.

MULTI-FUNCTION (M) Pin Operation (P and G Packages)

The LINE-SENSE and EXTERNAL CURRENT LIMIT pin functions are combined to a single MULTI-FUNCTION pin for P and G packages. The comparator with a 1 V threshold at the LINE-SENSE pin is removed in this case as shown in Figure 2b. All of the other functions are kept intact. However, since some of the functions require opposite polarity of input current (MULTI-FUNCTION pin), they are mutually exclusive. For example, line sensing features cannot be used simultaneously with external current limit setting. When current is fed into the MULTI-FUNCTION pin, it works as a voltage source of approximately 2.6 V up to a maximum current of +400 µA (typical). At +400 µA, this pin turns into a constant current sink. When current is drawn out of the MULTI-FUNCTION pin, it works as a voltage source of approximately 1.3 V up to a maximum current of -240 µA (typical). At -240 µA, it turns into a constant current source. Refer to Figure 12b.

There are a total of five functions available through the use of the MULTI-FUNCTION pin: OV, UV, line feed-forward with DC_{MAX} reduction, external current limit and remote ON/OFF. A short circuit between the MULTI-FUNCTION pin and SOURCE pin disables all five functions and forces *TOPSwitch-GX* to operate in a simple three terminal mode like *TOPSwitch-II*. The MULTI-FUNCTION pin is typically used for line sensing by connecting a resistor from this pin to the rectified DC high voltage bus to implement OV, UV and DC_{MAX} reduction with line voltage. In this mode, the value of the resistor determines the line OV/UV thresholds, and the DC_{MAX} is reduced linearly with increasing rectified DC high voltage starting from just above the UV threshold. External current limit programming is implemented by connecting the MULTI-FUNCTION pin to the SOURCE pin through a resistor. However, this function is not necessary in most applications since the internal current limit of the P and G package devices has been reduced, compared to the Y, R and F package devices, to match the thermal dissipation capability of the P and G packages. It is therefore recommended that the MULTI-FUNCTION pin is used for line sensing as described above and not for external current limit reduction. The same pin can also

MULTI-FUNCTION PIN TABLE*

Figure Number ▶	30	31	32	33	34	35	36	37	38	39	40
Three Terminal Operation	✓										
Under-Voltage		✓	✓								✓
Overvoltage		✓		✓							✓
Line Feed-Forward (DC_{MAX})		✓									✓
Overload Power Limiting						✓					
External Current Limit					✓	✓			✓	✓	
Remote ON/OFF							✓	✓	✓	✓	✓

*This table is only a partial list of many MULTI-FUNCTION pin configurations that are possible.

Table 3. Typcial MULTI-FUNCTION Pin Configurations.

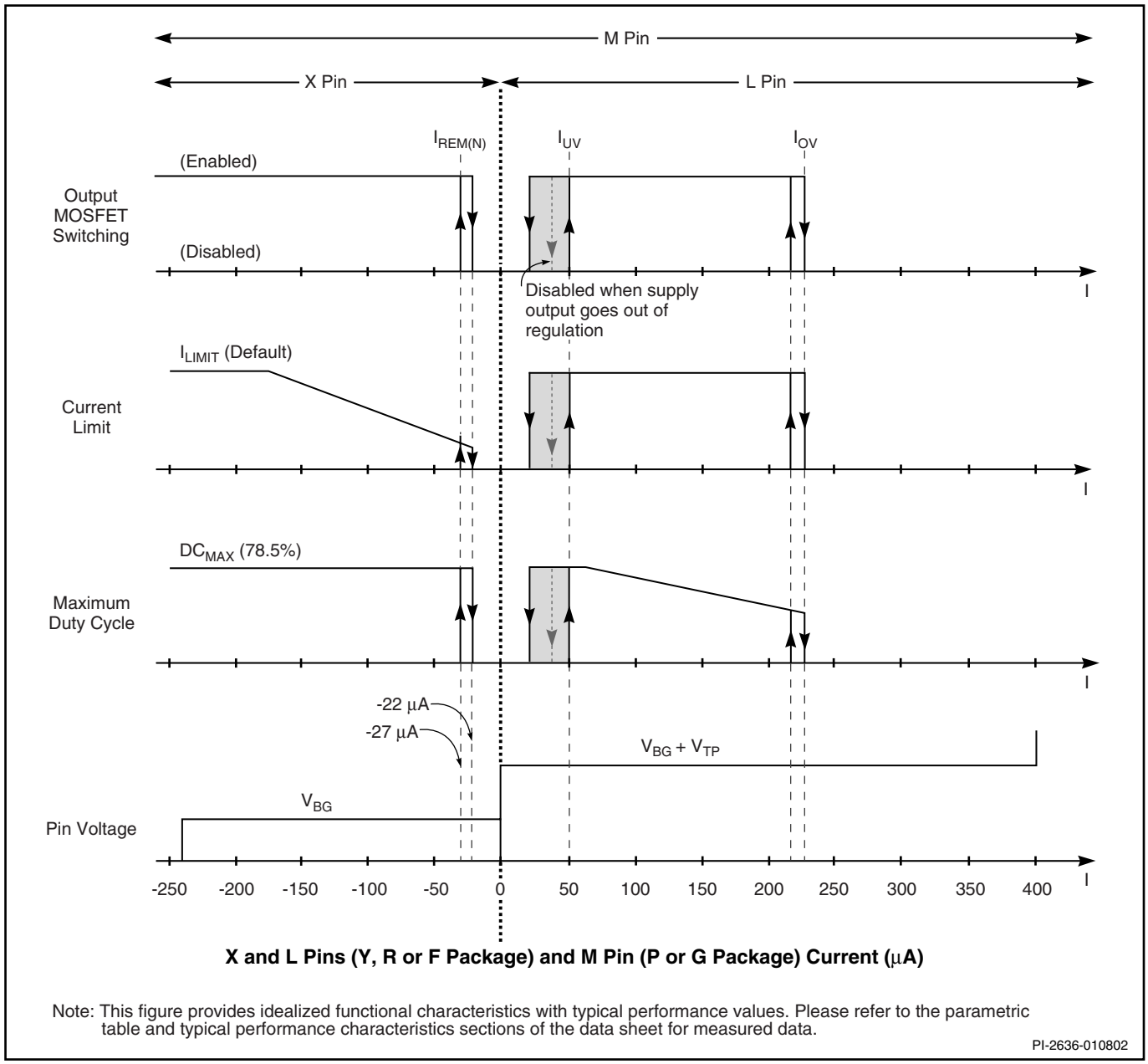

Figure 11. MULTI-FUNCTION (P or G package), LINSE-SENSE, and EXTERNAL CURRENT LIMIT (Y, R or F package) Pin Characteristics.

be used as a remote ON/OFF and a synchronization input in both modes. Please refer to Table 3 for possible combinations of the functions with example circuits shown in Figure 30 through Figure 40. A description of specific functions in terms of the MULTI-FUNCTION pin I/V characteristic is shown in Figure 11. The horizontal axis represents MULTI-FUNCTION pin current with positive polarity indicating currents flowing into the pin. The meaning of the vertical axes varies with functions. For those that control the ON/OFF states of the output such as UV, OV and remote ON/OFF, the vertical axis represents the enable/disable states of the output. UV triggers at I_{UV} (+50 µA typical) and OV triggers at I_{OV} (+225 µA typical with 30 µA hysteresis). Between the UV and OV thresholds, the output is enabled. For external current limit and line feed-forward with DC_{MAX} reduction, the vertical axis represents the magnitude of the I_{LIMIT} and DC_{MAX}. Line feed-forward with DC_{MAX} reduction lowers maximum duty cycle from 78% at $I_{M(DC)}$ (+60 µA typical) to 38% at I_{OV} (+225 µA). External current limit is available only with negative MULTI-FUNCTION pin current. Please see graphs in the Typical Performance Characteristics section for the current limit programming range and the selection of appropriate resistor value.

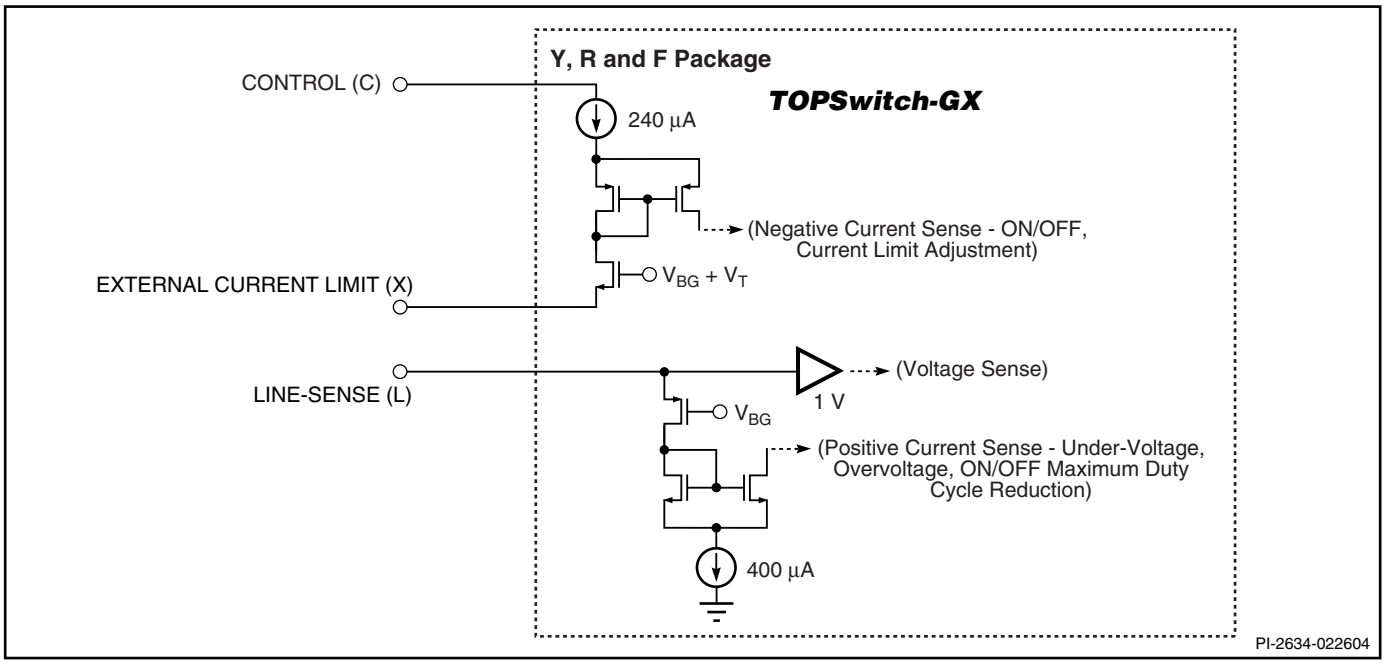

Figure 12a. LINE-SENSE (L), and EXTERNAL CURRENT LIMIT (X) Pin Input Simplified Schematic.

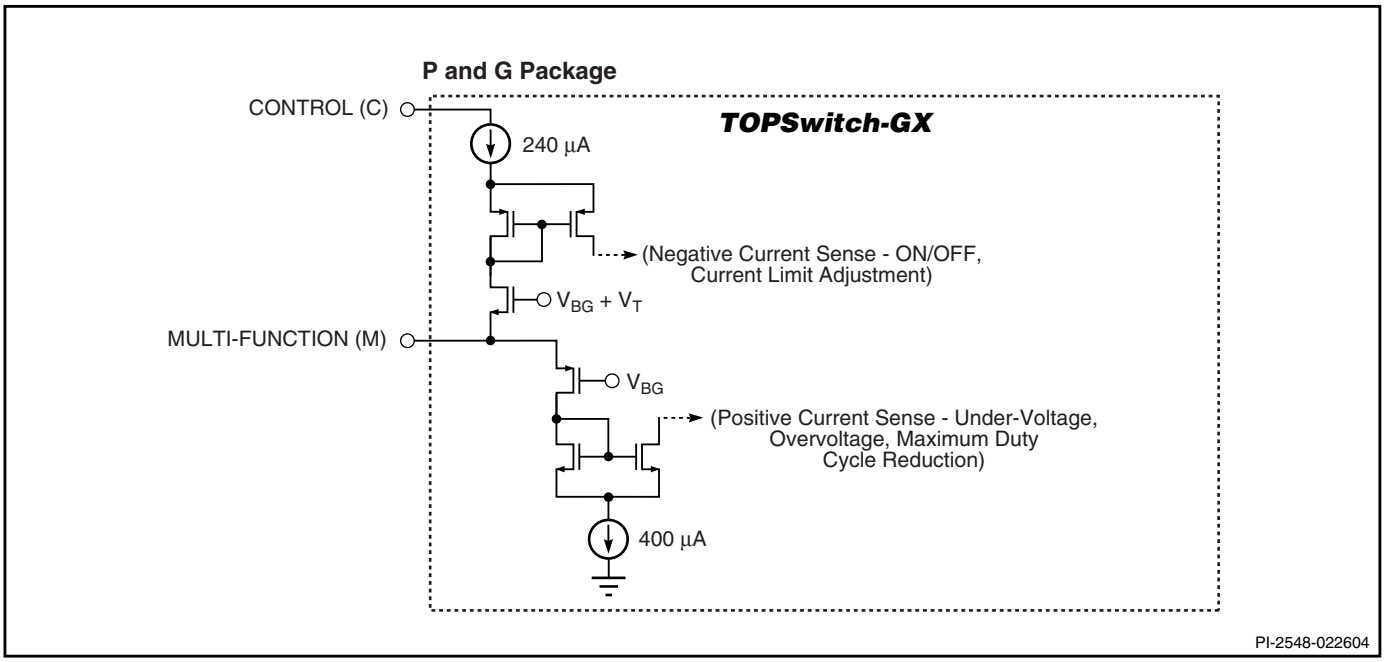

Figure 12b. MULTI-FUNCTION (M) Pin Input Simplified Schematic.

Typical Uses of FREQUENCY (F) PIN

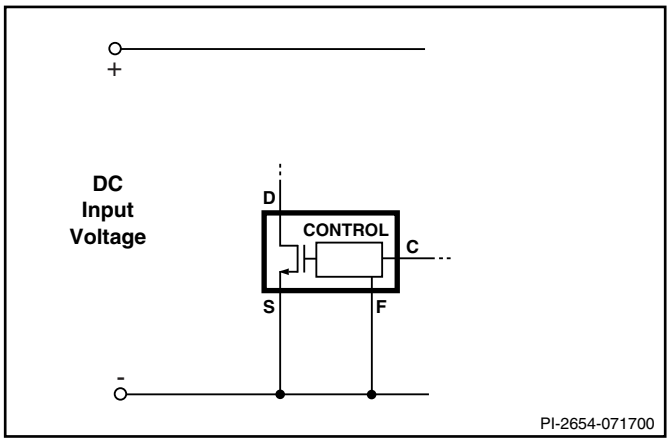

Figure 13. Full Frequency Operation (132 kHz).

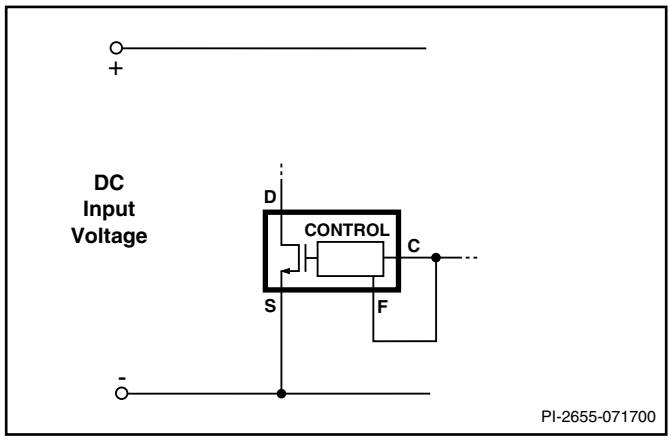

Figure 14. Half Frequency Operation (66 kHz).

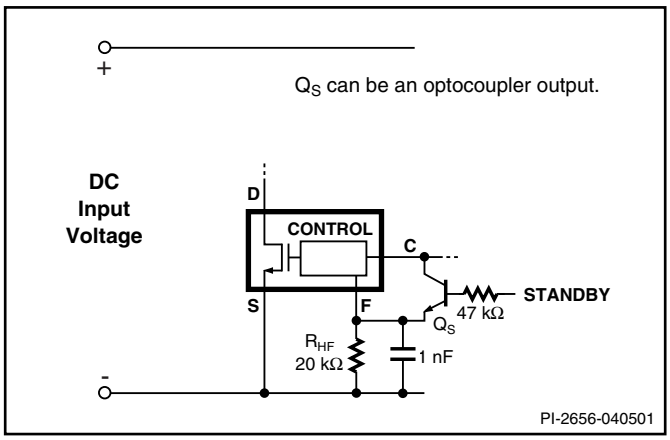

Figure 15. Half Frequency Standby Mode (For High Standby Efficiency).

Typical Uses of LINE-SENSE (L) and EXTERNAL CURRENT LIMIT (X) Pins

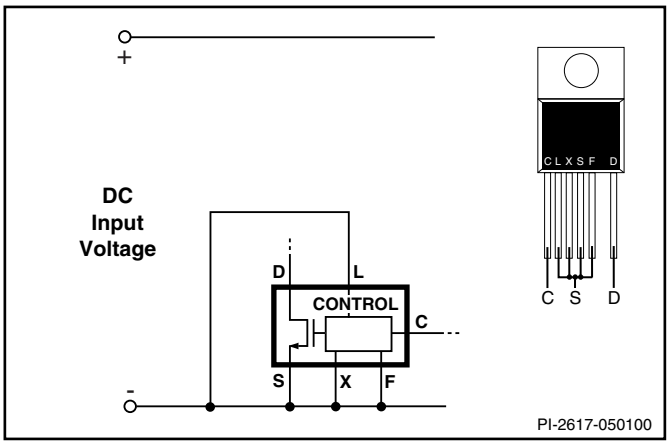

Figure 16. Three Terminal Operation (LINE-SENSE and EXTERNAL CURRENT LIMIT Features Disabled. FREQUENCY Pin Tied to SOURCE or CONTROL Pin).

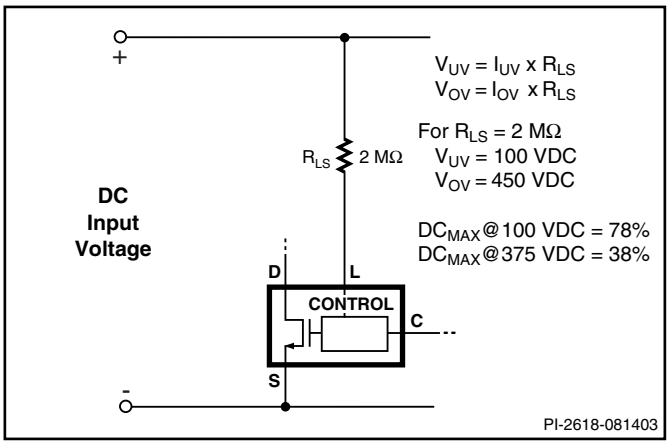

Figure 17. Line-Sensing for Under-Voltage, Overvoltage and Line Feed-Forward.

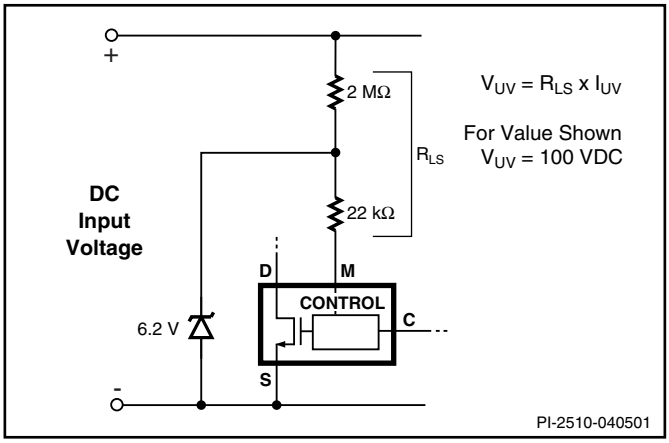

Figure 18. Line-Sensing for Under-Voltage Only (Overvoltage Disabled).

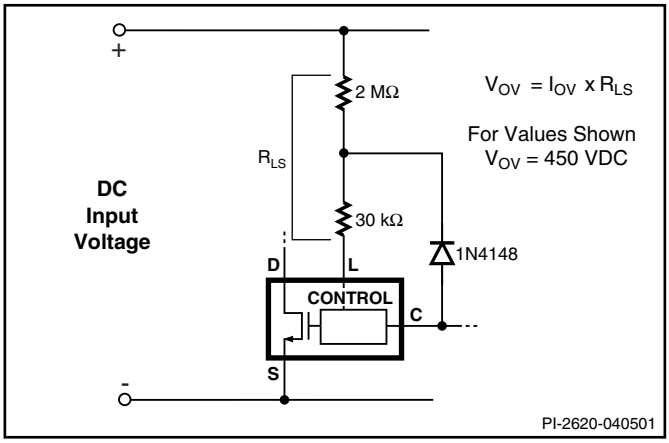

Figure 19. Linse-Sensing for Overvoltage Only (Under-Voltage Disabled). Maximum Duty Cycle Reduced at Low Line and Further Reduction with Increasing Line Voltage.

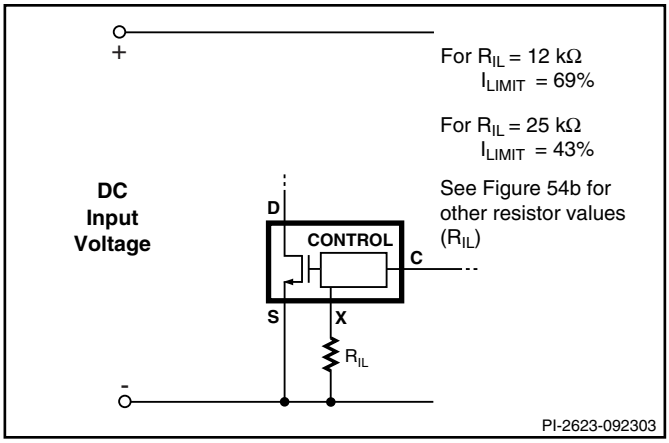

Figure 20. Externally Set Current Limit.

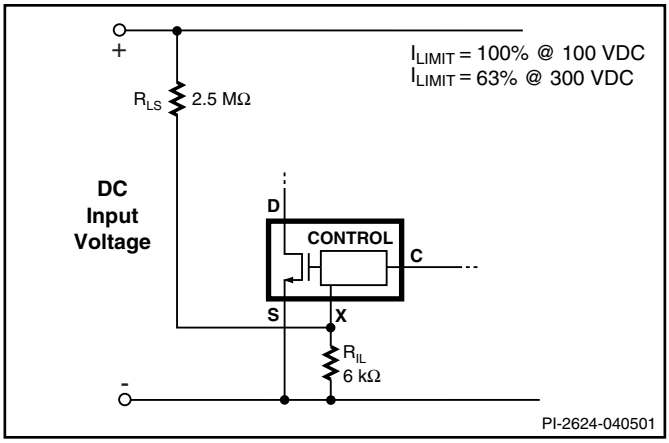

Figure 21. Current Limit Reduction with Line Voltage.

Typical Uses of LINE-SENSE (L) and EXTERNAL CURRENT LIMIT (X) Pins (cont.)

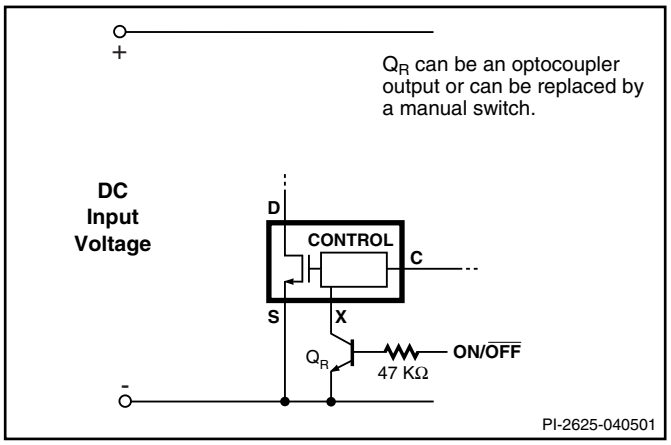

Figure 22. Active-on (Fail Safe) Remove ON/OFF.

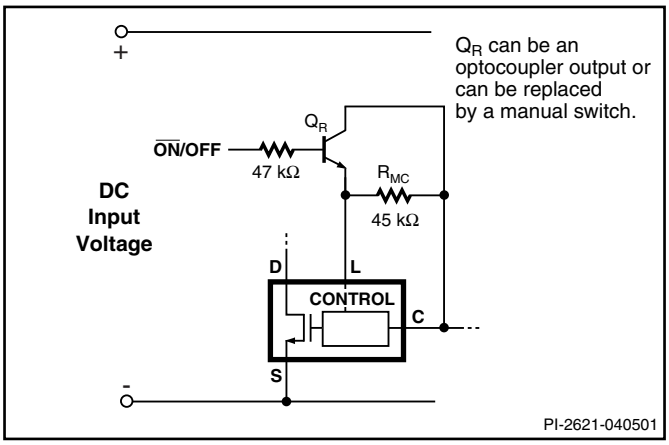

Figure 23. Active-off Remote ON/OFF. Maximum Duty Cycle Reduced.

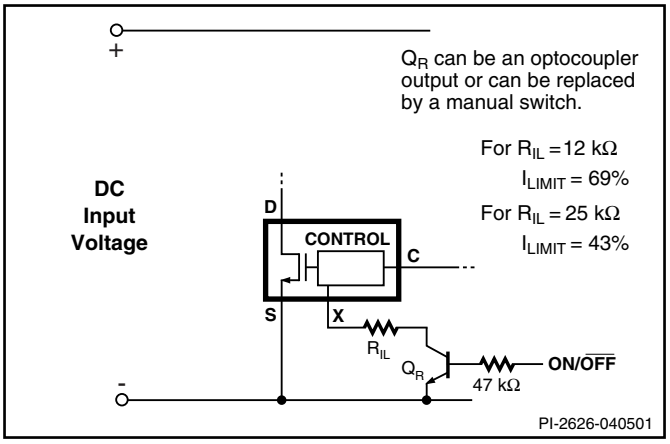

Figure 24. Active-on Remote ON/OFF with Externally Set Current Limit.

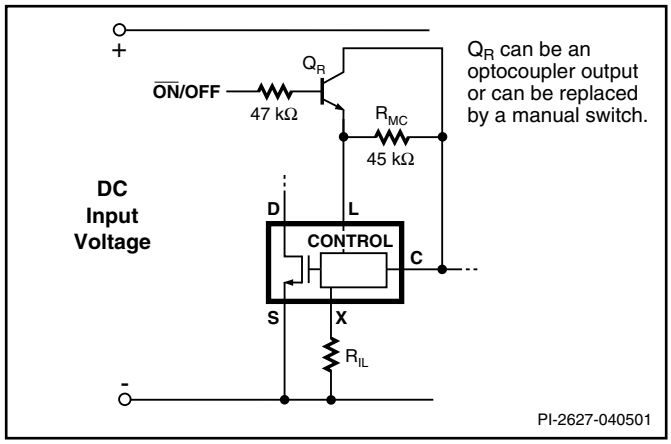

Figure 25. Active-off Remote ON/OFF with Externally Set Current Limit.

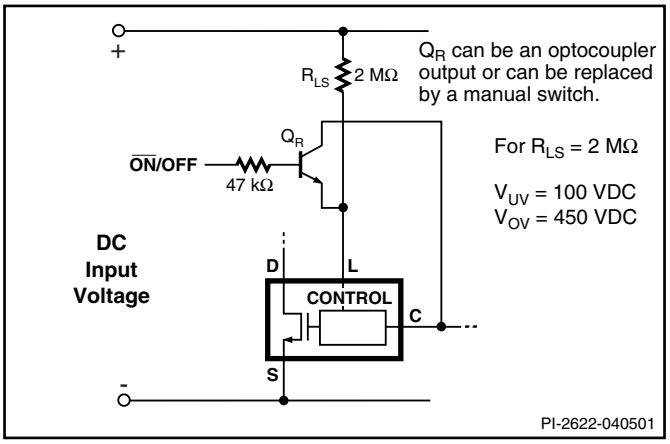

Figure 26. Active-off Remote ON/OFF with LINE-SENSE.

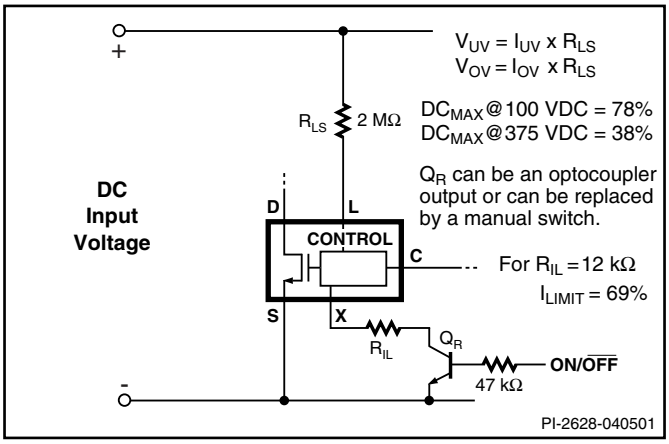

Figure 27. Active-on Remote ON/OFF with LINE-SENSE and EXTERNAL CURRENT LIMIT.

Typical Uses of LINE-SENSE (L) and EXTERNAL CURRENT LIMIT (X) Pins (cont.)

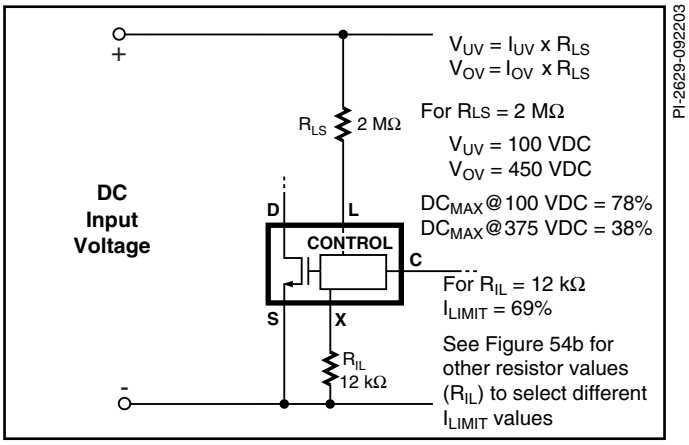

Figure 28. Line-Sensing and Externally Set Current Limit.

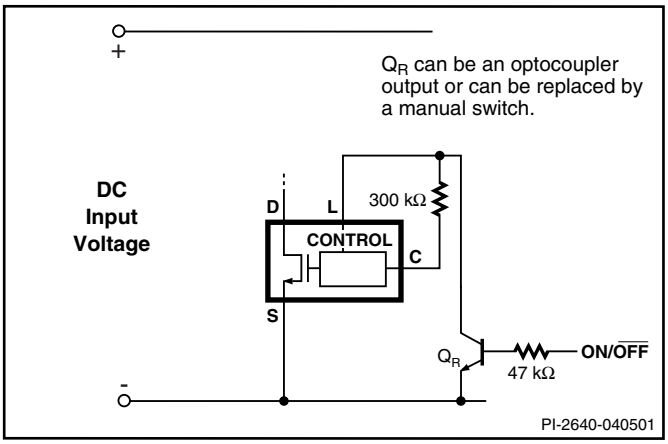

Figure 29. Active-on Remote ON/OFF.

Typical Uses of MULTI-FUNCTION (M) Pin

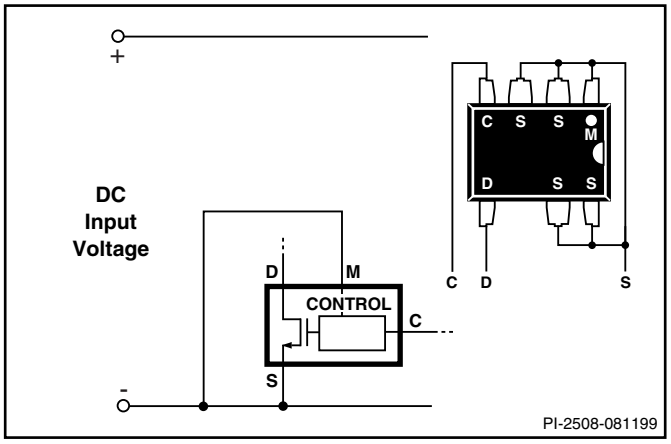

Figure 30. Three Terminal Operation (MULIT-FUNCTION Features Disabled).

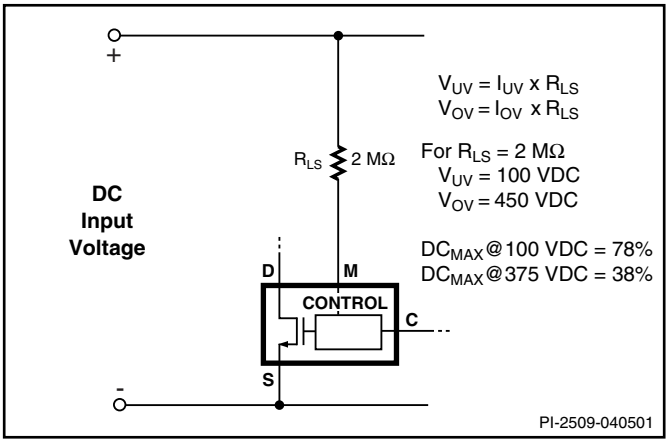

Figure 31. Line-Sensing for Undervoltage, Over-Voltage and Line Feed-Forward.

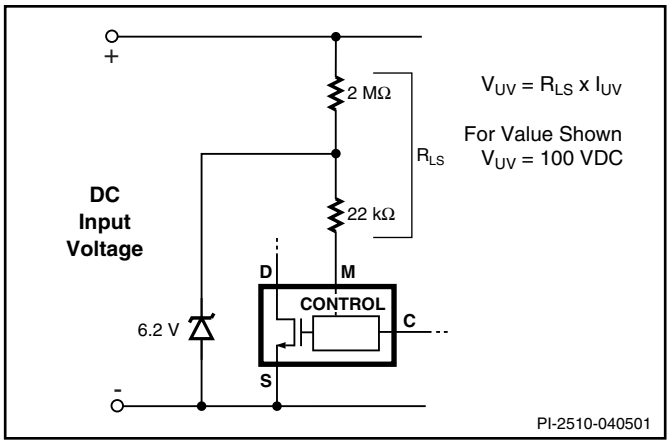

Figure 32. Line-Sensing for Under-Voltage Only (Overvoltage Disabled).

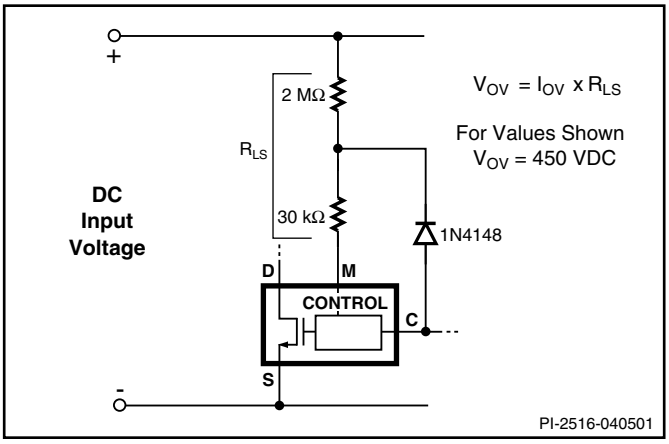

Figure 33. Line-Sensing for Overvoltage Only (Under-Voltage Disabled). Maximum Duty Cycle Reduced at Low Line and Further Reduction with Increasing Line Voltage.

Typical Uses of MULTI-FUNCTION (M) Pin (cont.)

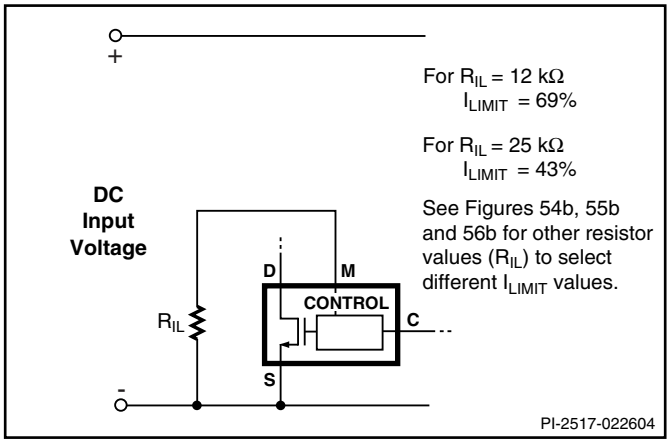

Figure 34. Externally Set Current Limit (Not Normally Required-See M Pin Operation Description).

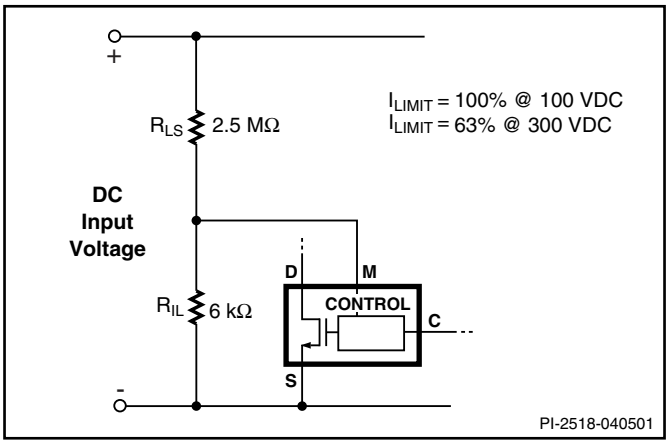

Figure 35. Current Limit Reduction with Line Voltage (Not Normally Required-See M Pin Operation Description).

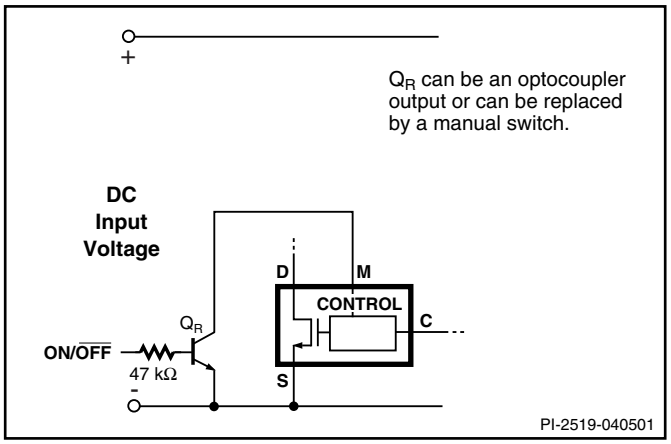

Figure 36. Active-on (Fail Safe) Remote ON/OFF.

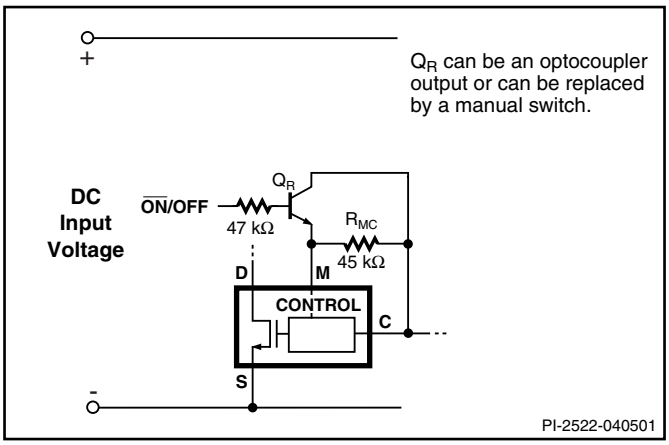

Figure 37. Active-off Remote ON/OFF. Maximum Duty Cycle Reduced.

Typical Uses of MULTI-FUNCTION (M) Pin (cont.)

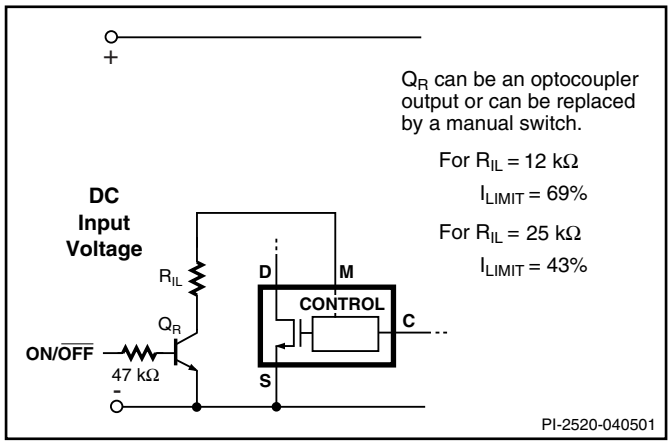

Figure 38. Active-on Remote ON/OFF with Externally Set Current Limit (See M Pin Operation Description).

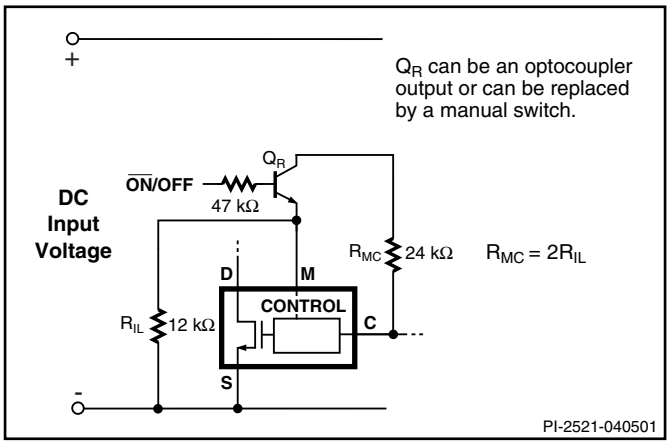

Figure 39. Active-off Remote ON/OFF with Externally Set Current Limit (See M Pin Operation Description).

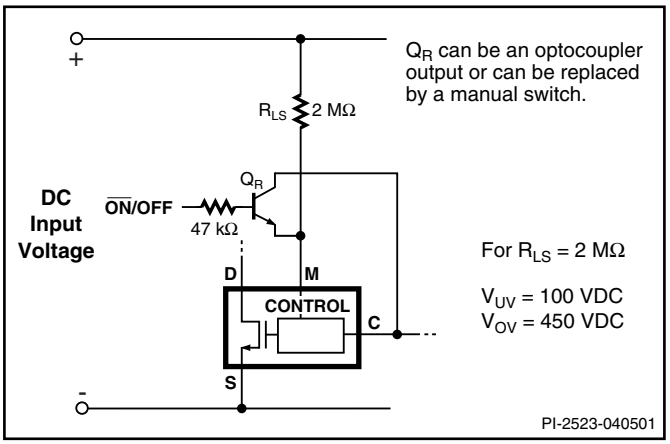

Figure 40. Active-off Remote ON/OFF with LINE-SENSE.

Application Examples

A High Efficiency, 30 W, Universal Input Power Supply
The circuit shown in Figure 41 takes advantage of several of the *TOPSwitch-GX* features to reduce system cost and power supply size and to improve efficiency. This design delivers 30 W at 12 V, from an 85 VAC to 265 VAC input, at an ambient of 50 °C, in an open frame configuration. A nominal efficiency of 80% at full load is achieved using TOP244Y.

The current limit is externally set by resistors R1 and R2 to a value just above the low line operating peak DRAIN current of approximately 70% of the default current limit. This allows use of a smaller transformer core size and/or higher transformer primary inductance for a given output power, reducing *TOPSwitch-GX* power dissipation, while at the same time avoiding transformer core saturation during startup and output transient conditions. The resistors R1 & R2 provide a signal that reduces the current limit with increasing line voltage, which in turn limits the maximum overload power at high input line voltage. This function in combination with the built-in soft-start feature of *TOPSwitch-GX*, allows the use of a low cost RCD clamp (R3, C3 and D1) with a higher reflected voltage, by safely limiting the *TOPSwitch-GX* drain voltage, with adequate margin under worst case conditions. Resistor R4 provides line sensing, setting UV at 100 VDC and OV at 450 VDC. The extended maximum duty cycle feature of *TOPSwitch-GX* (guaranteed minimum value of 75% vs. 64% for *TOPSwitch-II*) allows the use of a smaller input capacitor (C1). The extended maximum duty cycle and the higher reflected voltage possible with the RCD clamp also permit the use of a higher primary to secondary turns ratio for T1, which reduces the peak reverse voltage experienced by the secondary rectifier D8. As a result a 60 V Schottky rectifier can be used for up to 15 V outputs, which greatly improves power supply efficiency. The frequency reduction feature of the *TOPSwitch-GX* eliminates the need for any dummy loading for regulation at no load and reduces the no-load/standby consumption of the power supply. Frequency jitter provides improved margin for conducted EMI, meeting the CISPR 22 (FCC B) specification.

Output regulation is achieved by using a simple Zener sense circuit for low cost. The output voltage is determined by the Zener diode (VR2) voltage and the voltage drops across the optocoupler (U2) LED and resistor R6. Resistor R8 provides bias current to Zener VR2 for typical regulation of ±5% at the 12 V output level, over line and load and component variations.

A High Efficiency, Enclosed, 70 W, Universal Adapter Supply
The circuit shown in Figure 42 takes advantage of several of the *TOPSwitch-GX* features to reduce cost, power supply size and

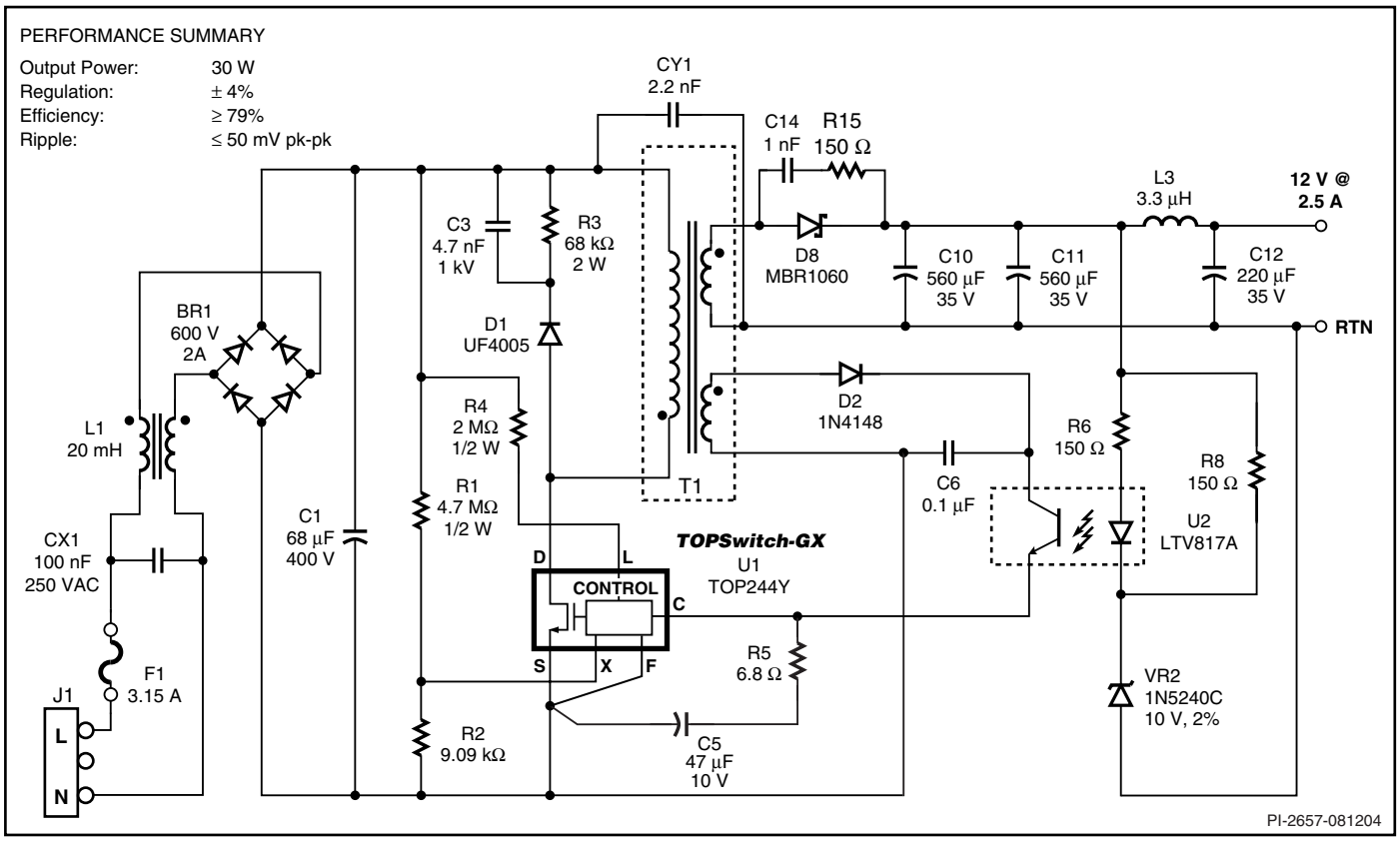

Figure 41. 30 W Power Supply using External Current Limit Programming and Line Sensing for UV and OV.

increase efficiency. This design delivers 70 W at 19 V, from an 85 VAC to 265 VAC input, at an ambient of 40 °C, in a small sealed adapter case (4” x 2.15” x 1”). Full load efficiency is 85% at 85 VAC rising to 90% at 230 VAC input.

Due to the thermal environment of a sealed adapter, a TOP249Y is used to minimize device dissipation. Resistors R9 and R10 externally program the current limit level to just above the operating peak DRAIN current at full load and low line. This allows the use of a smaller transformer core size without saturation during startup or output load transients. Resistors R9 and R10 also reduce the current limit with increasing line voltage, limiting the maximum overload power at high input line voltage, removing the need for any protection circuitry on the secondary. Resistor R11 implements an under-voltage and overvoltage sense as well as providing line feed-forward for reduced output line frequency ripple. With resistor R11 set at 2 MΩ, the power supply does not start operating until the DC rail voltage reaches 100 VDC. On removal of the AC input, the UV sense prevents the output glitching as C1 discharges, turning off the *TOPSwitch-GX* when the output regulation is lost or when the input voltage falls to below 40 V, whichever occurs first. This same value of R11 sets the OV threshold to 450 V. If exceeded, for example during a line surge, *TOPSwitch-GX* stops switching for the duration of the surge, extending the high voltage withstand to 700 V without device damage. Capacitor C11 has been added in parallel with VR1 to reduce Zener clamp dissipation. With a switching frequency of 132 kHz, a PQ26/20 core can be used to provide 70 W. To maximize efficiency, by reducing winding losses, two output windings are used each with their own dual 100 V Schottky rectifier (D2 and D3). The frequency reduction feature of the *TOPSwitch-GX* eliminates any dummy loading to maintain regulation at no load and reduces the no-load consumption of the power supply to only 520 mW at 230 VAC input. Frequency jittering provides conducted EMI meeting the CISPR 22 (FCC B) / EN55022B specification, using simple filter components (C7, L2, L3 and C6), even with the output earth grounded.

To regulate the output, an optocoupler (U2) is used with a secondary reference sensing the output voltage via a resistor divider (U3, R4, R5, R6). Diode D4 and C15 filter and smooth the output of the bias winding. Capacitor C15 (1 µF) prevents the bias voltage from falling during zero to full load transients. Resistor R8 provides filtering of leakage inductance spikes, keeping the bias voltage constant even at high output loads. Resistor R7, C9 and C10 together with C5 and R3 provide loop compensation.

Due to the large primary currents, all the small signal control components are connected to a separate source node that is Kelvin connected to the SOURCE pin of the *TOPSwitch-GX*. For improved common-mode surge immunity, the bias winding common returns directly to the DC bulk capacitor (C1).

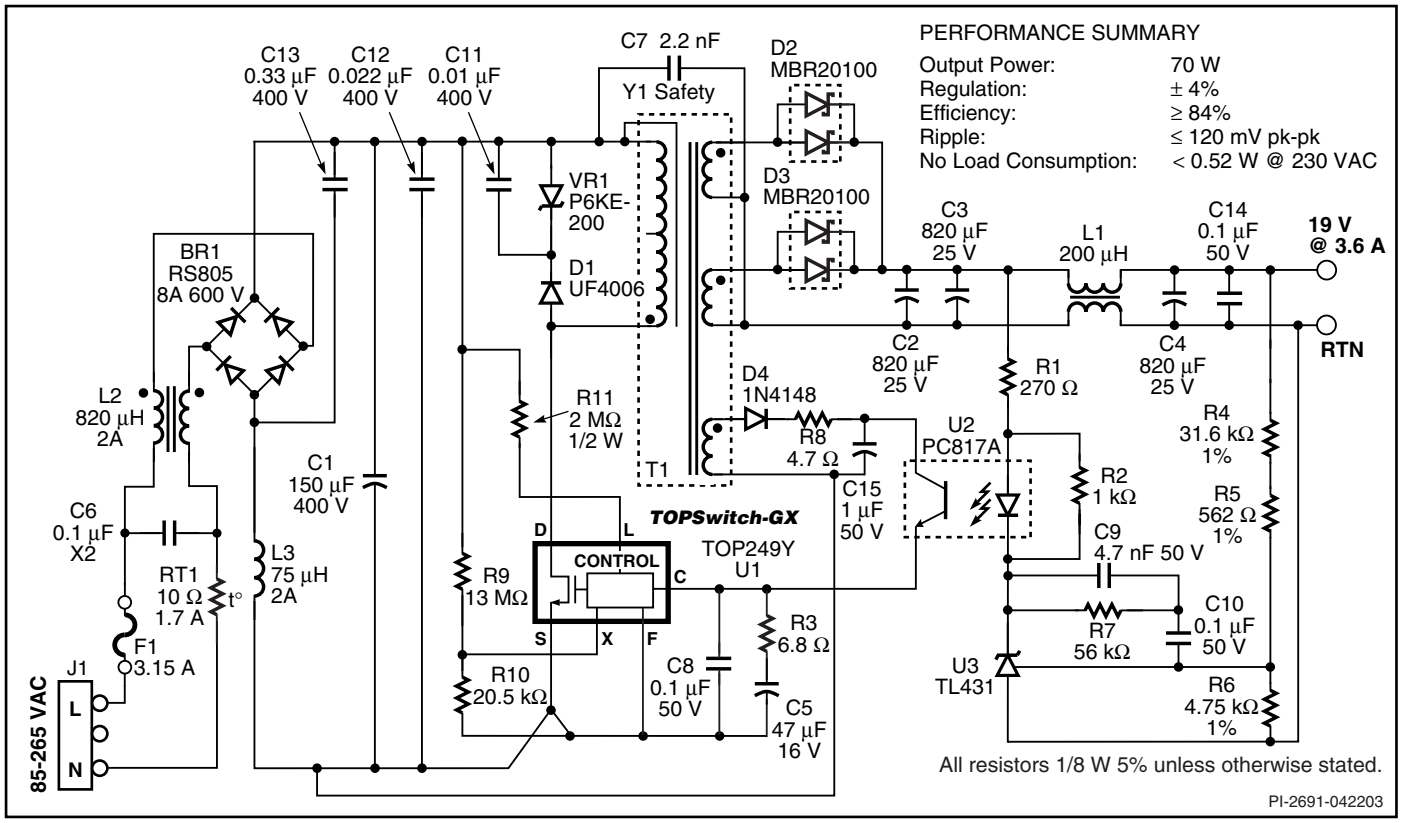

Figure 42. 70 W Power Supply using Current Limit Reduction with Line and Line Sensing for UV and OV.

A High Efficiency, 250 W, 250-380 VDC Input Power Supply
The circuit shown in Figure 43 delivers 250 W (48 V @ 5.2 A) at 84% efficiency using a TOP249 from a 250 VDC to 380 VDC input. DC input is shown, as typically at this power level a p.f.c. boost stage would preceed this supply, providing the DC input (C1 is included to provide local decoupling). Flyback topology is still usable at this power level due to the high output voltage, keeping the secondary peak currents low enough so that the output diode and capacitors are reasonably sized.

In this example, the TOP249 is at the upper limit of its power capability and the current limit is set to the internal maximum by connecting the X pin to SOURCE. However, line sensing is implemented by connecting a 2 MΩ resistor from the L pin to the DC rail. If the DC input rail rises above 450 VDC, then *TOPSwitch-GX* will stop switching until the voltage returns to normal, preventing device damage.

Due to the high primary current, a low leakage inductance transformer is essential. Therefore, a sandwich winding with a copper foil secondary was used. Even with this technique, the leakage inductance energy is beyond the power capability of a simple Zener clamp. Therefore, R2, R3 and C6 are added in parallel to VR1. These have been sized such that during normal operation, very little power is dissipated by VR1, the leakage energy instead being dissipated by R2 and R3. However, VR1 is essential to limit the peak drain voltage during start-up and/or overload conditions to below the 700 V rating of the *TOPSwitch-GX* MOSFET.

The secondary is rectifed and smoothed by D2 and C9, C10 and C11. Three capacitors are used to meet the secondary ripple current requirement. Inductor L2 and C12 provide switching noise filtering.

A simple Zener sensing chain regulates the output voltage. The sum of the voltage drop of VR2, VR3 and VR4 plus the LED drop of U2 gives the desired output voltage. Resistor R6 limits LED current and sets overall control loop DC gain. Diode D4 and C14 provide secondary soft-finish, feeding current into the CONTROL pin prior to output regulation and thus ensuring that the output voltage reaches regulation at start-up under low line, full load conditions. Resistor R9 provides a discharge path for C14. Capacitor C13 and R8 provide control loop compensation and are required due to the gain associated with such a high output voltage.

Sufficient heat sinking is required to keep the *TOPSwitch-GX* device below 110 °C when operating under full load, low line and maximum ambient temperature. Airflow may also be required if a large heatsink area is not acceptable.

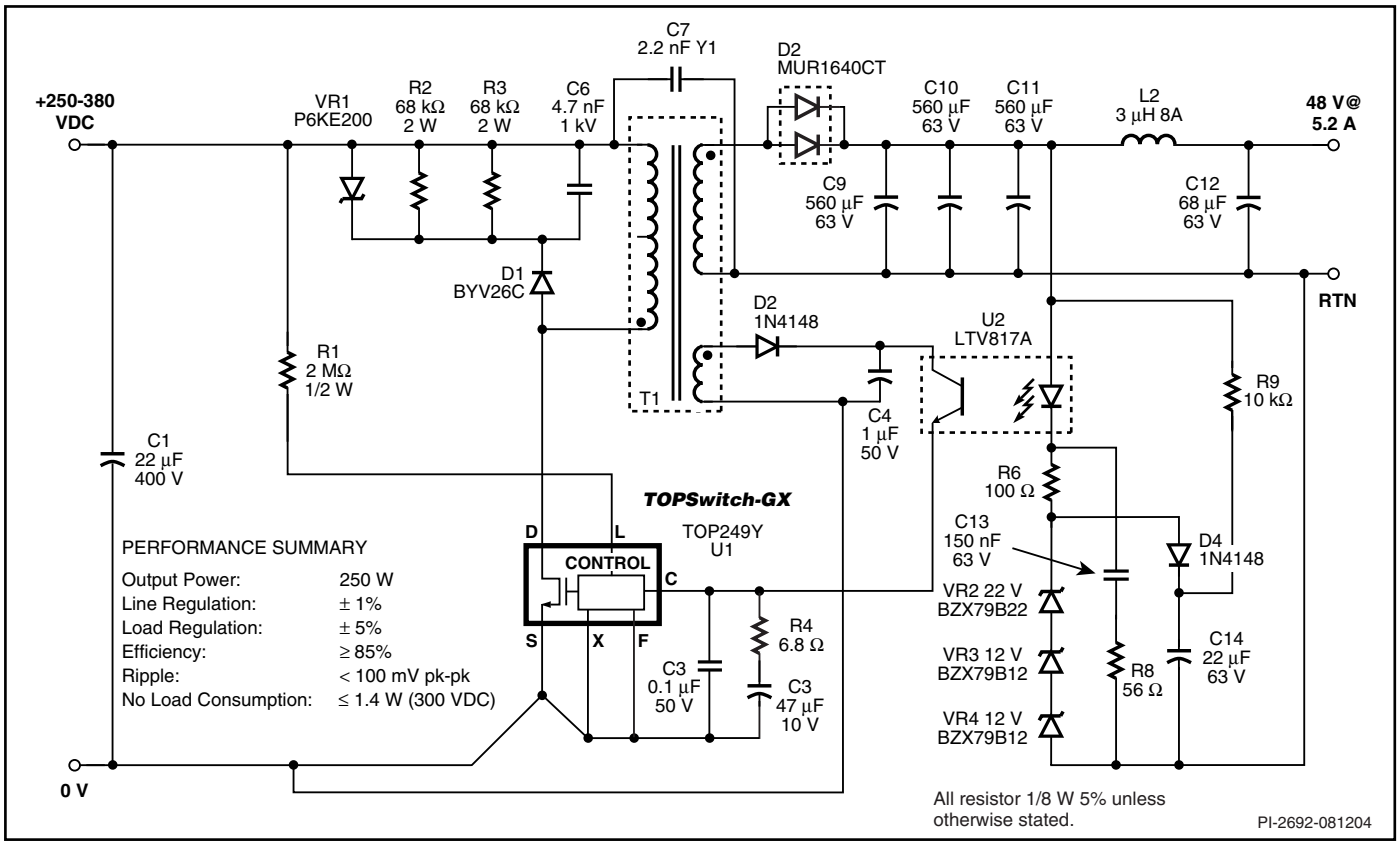

Figure 43. 250 W, 48 V Power Supply using TOP249.

Multiple Output, 60 W, 185-265 VAC Input Power Supply
Figure 44 shows a multiple output supply typical for high end set-top boxes or cable decoders containing high capacity hard disks for recording. The supply delivers an output power of 45 W continuous/60 W peak (thermally limited) from an input voltage of 185 VAC to 265 VAC. Efficiency at 45 W, 185 VAC is ≥ 75%.

The 3.3 V and 5 V outputs are regulated to ±5% without the need for secondary linear regulators. DC stacking (the secondary winding reference for the other output voltages is connected to the cathode of D10 rather than the anode) is used to minimize the voltage error for the higher voltage outputs.

Due to the high ambient operating temperature requirement typical of a set-top box (60 °C), the TOP246Y is used to reduce conduction losses and minimize heatsink size. Resistor R2 sets the device current limit to 80% of typical to limit overload power. The line sense resistor (R1) protects the *TOPSwitch-GX* from line surges and transients by sensing when the DC rail voltage rises to above 450 V. In this condition the *TOPSwitch-GX* stops switching, extending the input voltage withstand to 496 VAC, which is ideal for countries with poor power quality. A thermistor (RT1) is used to prevent premature failure of the fuse by limiting the inrush current (due to the relatively large size of C2). An optional MOV (RV1) extends the differential surge protection to 6 kV from 4 kV.

Leakage inductance clamping is provided by VR1, R5 and C5, keeping the DRAIN voltage below 700 V under all conditions. Resistor R5 and capacitor C5 are selected such that VR1 dissipates very little power except during overload conditions. The frequency jittering feature of *TOPSwitch-GX* allows the circuit shown to meet CISPR22B with simple EMI filtering (C1, L1 and C6) and the output grounded.

The secondaries are rectified and smoothed by D7 to D11, C7, C9, C11, C13, C14, C16 and C17. Diode D11 for the 3.3 V output is a Schottky diode to maximize efficiency. Diode D10 for the 5 V output is a PN type to center the 5 V output at 5 V. The 3.3 V and 5 V output require two capacitors in parallel to meet the ripple current requirement. Switching noise filtering is provided by L2 to L5 and C8, C10, C12, C15 and C18. Resistor R6 prevents peak charging of the lightly loaded 30 V output. The outputs are regulated using a secondary reference (U3). Both the 3.3 V and 5 V outputs are sensed via R11 and R10. Resistor R8 provides bias for U3 and R7 sets the overall DC gain. Resistor R9, C19, R3 and C5 provide loop compensation. A soft-finish capacitor (C20) eliminates output overshoot.

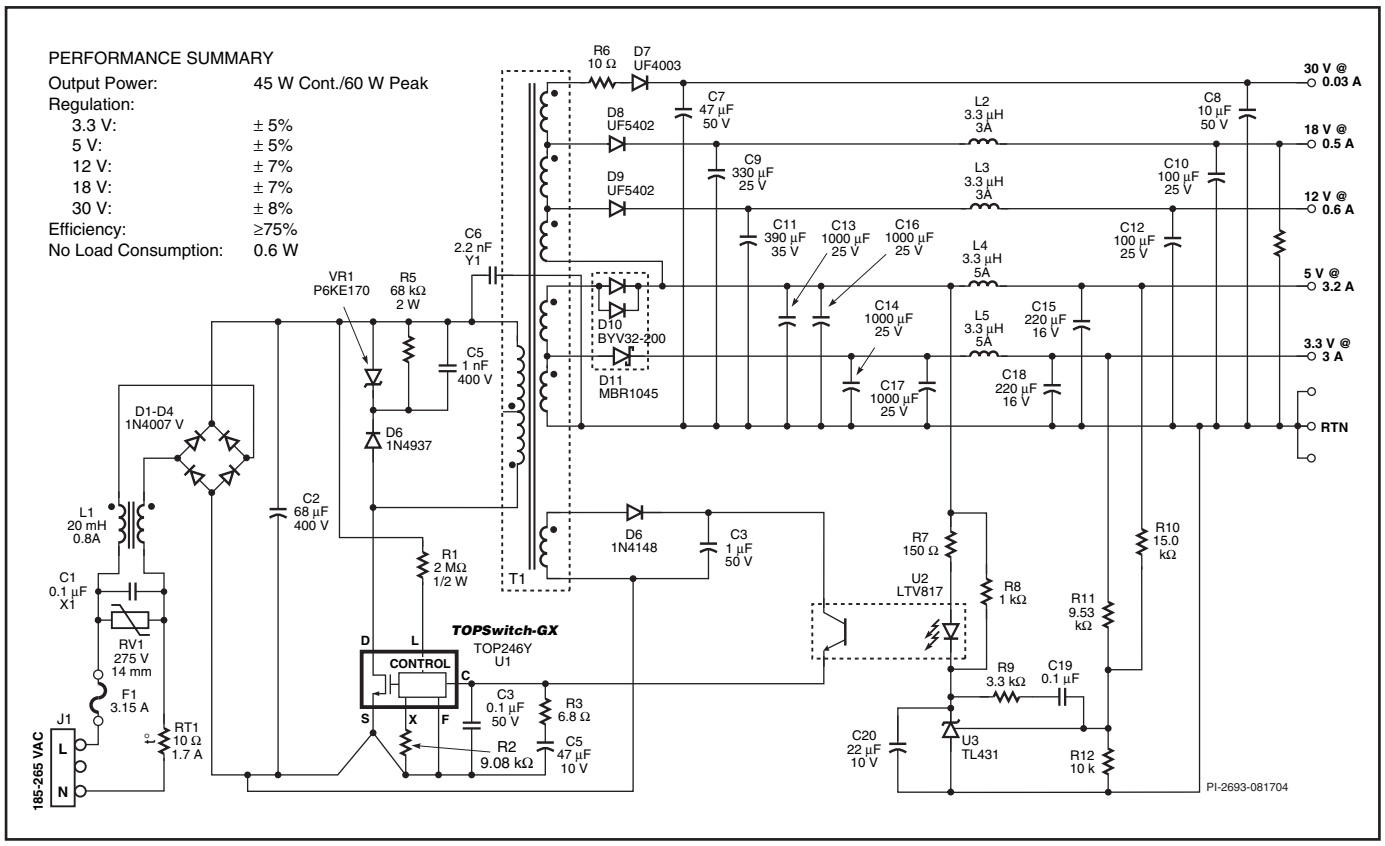

Figure 44. 60 W Multiple Output Power Supply using TOP246.

Processor Controlled Supply Turn On/Off

A low cost momentary contact switch can be used to turn the *TOPSwitch-GX* power on and off under microprocessor control, which may be required in some applications such as printers. The low power remote OFF feature allows an elegant implementation of this function with very few external components, as shown in Figure 45. Whenever the push button momentary contact switch P1 is closed by the user, the optocoupler U3 is activated to inform the microprocessor of this action. Initially, when the power supply is off (M pin is floating), closing of P1 turns the power supply on by shorting the M pin of the *TOPSwitch-GX* to SOURCE through a diode (remote ON). When the secondary output voltage V_{CC} is established, the microprocessor comes alive and recognizes that the switch P1 is closed through the switch status input that is driven by the optocoupler U3 output. The microprocessor then sends a power supply control signal to hold the power supply in the on-state through the optocoupler U4. If the user presses the switch P1 again to command a turn off, the microprocessor detects this through the optocoupler U3 and initiates a shutdown procedure that is product specific. For example, in the case of the inkjet printer, the shutdown procedure may include safely parking the print heads in the storage position. In the case of products with a disk drive, the shutdown procedure may include saving data or settings to the disk. After the shutdown procedure is complete, when it is safe to turn off the power supply, the microprocessor releases the M pin by turning the optocoupler U4 off. If the manual switch and the optocouplers U3 and U4 are not located close to the M pin, a capacitor C_M may be needed to prevent noise coupling to the pin when it is open.

The power supply could also be turned on remotely through a local area network or a parallel or serial port by driving the optocoupler U4 input LED with a logic signal. Sometimes it is easier to send a train of logic pulses through a cable (due to AC coupling of cable, for example) instead of a DC logic level as a wake up signal. In this case, a simple RC filter can be used to generate a DC level to drive U4 (not shown in Figure 45). This remote on feature can be used to wake up peripherals such as printers, scanners, external modems, disk drives, etc., as needed from a computer. Peripherals are usually designed to turn off automatically if they are not being used for a period of time, to save power.

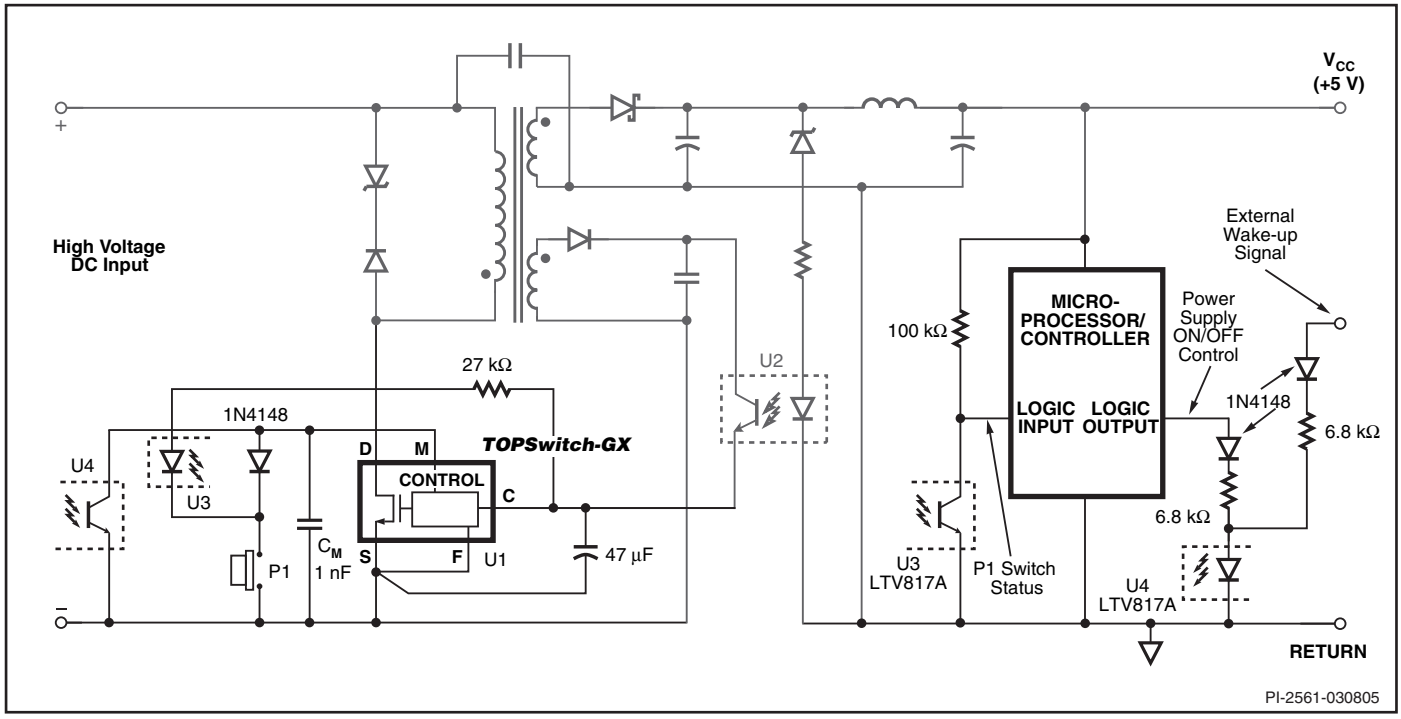

Figure 45. Remote ON/OFF using Microcontroller.

In addition to using a minimum number of components, *TOPSwitch-GX* provides many technical advantages in this type of application:

1. Extremely low power consumption in the off mode: 80 mW typical at 110 VAC and 160 mW typical at 230 VAC. This is because, in the remote OFF mode, the *TOPSwitch-GX* consumes very little power and the external circuitry does not consume any current (either M, L or X pin is open) from the high voltage DC input.

2. A very low cost, low voltage/current, momentary contact switch can be used.

3. No debouncing circuitry for the momentary switch is required. During turn-on, the start-up time of the power supply (typically 10 ms to 20 ms) plus the microprocessor initiation time act as a debouncing filter, allowing a turn-on only if the switch is depressed firmly for at least the above delay time. During turn-off, the microprocessor initiates the shutdown sequence when it detects the first closure of the switch and subsequent bouncing of the switch has no effect. If necessary, the microprocessor could implement the switch debouncing in software during turn-off, or a filter capacitor can be used at the switch status input.

4. No external current limiting circuitry is needed for the operation of the U4 optocoupler output due to internal limiting of M pin current.

5. No high voltage resistors to the input DC voltage rail are required to power the external circuitry in the primary. Even the LED current for U3 can be derived from the CONTROL pin. This not only saves components and simplifies layout, but also eliminates the power loss associated with the high voltage resistors in both ON and OFF states.

6. Robust design: There is no ON/OFF latch that can be accidentally triggered by transients. Instead, the power supply is held in the ON-state through the secondary-side microprocessor.

Key Application Considerations

TOPSwitch-II vs. *TOPSwitch-GX*

Table 4 compares the features and performance differences between *TOPSwitch-GX* and *TOPSwitch-II*. Many of the new features eliminate the need for additional discrete components. Other features increase the robustness of design, allowing cost savings in the transformer and other power components.

Function	*TOPSwitch-II*	*TOPSwitch-GX*	Figures	*TOPSwitch-GX* Advantages
Soft-Start	N/A*	10 ms		• Limits peak current and voltage component stresses during start-up • Eliminates external components used for soft-start in most applications • Reduces or eliminates output overshoot
External Current Limit	N/A*	Programmable 100% to 30% of default current limit	11,20,21, 24,25,27, 28,34,35, 38,39	• Smaller transformer • Higher efficiency • Allows power limiting (constant overload power independent of line voltage) • Allows use of larger device for lower losses, higher efficiency and smaller heatsink
DC_{MAX}	67%	78%	7	• Smaller input cap (wider dynamic range) • Higher power capability (when used with RCD clamp for large V_{OR}) • Allows use of Schottky secondary rectifier diode for up to 15 V output for high efficiency
Line Feed-Forward with DC_{MAX} Reduction	N/A*	78% to 38%	7,11,17, 26,27,28, 31,40	• Rejects line ripple
Line OV Shutdown	N/A*	Single resistor programmable	11,17,19, 26,27,28 31,33,40	• Increases voltage withstand capability against line surge
Line UV Detection	N/A*	Single resistor programmable	11,17,18, 26,27,28, 31,32,40	• Prevents auto-restart glitches during power down
Switching Frequency	100 kHz ±10%	132 kHz ±6%	13,15	• Smaller transformer • Below start of conducted EMI limits

Table 4. Comparison Between TOPSwitch-II and TOPSwitch-GX (continued on next page). *Not available

Function		TOPSwitch-II	TOPSwitch-GX	Figures	TOPSwitch-GX Advantages
Switching Frequency Option (Y, R and F Packages)		N/A*	66 kHz ±7%	14,15	• Lower losses when using RC and RCD snubber for noise reduction in video applications • Allows for higher efficiency in standby mode • Lower EMI (second harmonic below 150 kHz)
Frequency Jitter		N/A*	±4 kHz @ 132 kHz ±2 kHz @ 66 kHz	9,46	• Reduces conducted EMI
Frequency Reduction		N/A*	At a duty cycle below 10%	7	• Zero load regulation without dummy load • Low power consumption at no-load
Remote ON/OFF		N/A*	Single transistor or optocoupler interface or manual switch	11,22,23, 24,25,26, 27,29,36, 37,38,39, 40	• Fast ON/OFF (cycle-by-cycle) • Active-on or active-off control • Low consumption in remote off state • Active-on control for fail-safe • Eliminates expensive in-line on/off switch • Allows processor controlled turn on/off • Permits shutdown/wake-up of peripherals via LAN or parallel port
Synchronization		N/A*	Single transistor or optocoupler interface		• Synchronization to external lower frequency signal • Starts new switching cycle on demand
Thermal Shutdown		125 °C min. Latched	Hysteretic 130 °C min. shutdown (with 75 °C hysteresis)		• Automatic recovery from thermal fault • Large hysteresis prevents circuit board overheating
Current Limit Tolerance		±10% (@ 25 °C) -8% (0 °C to 100 °C)	±7% (@ 25 °C) -4% Typical (0 °C to 100 °C)**		• 10% Higher power capability due to tighter tolerance
DRAIN Creepage at Package	DIP	0.037” / 0.94 mm	0.137” / 3.48 mm		• Greater immunity to arcing as a result of build-up of dust, debris and other contaminants
	SMD	0.037” / 0.94 mm	0.137” / 3.48 mm		
	TO-220	0.046” / 1.17 mm	0.068” / 1.73 mm		
DRAIN Creepage at PCB for Y, R and F Packages		0.045” / 1.14 mm (R and F Package N/A*)	0.113” / 2.87 mm (performed leads)		• Performed leads accommodate large creepage for PCB layout • Easier to meet Safety (UL/VDE)

Table 4 (cont). Comparison Between TOPSwitch-II and TOPSwitch-GX. *Not available **Current limit set to internal maximum

Function	*TOPSwitch-FX*	*TOPSwitch-GX*	*TOPSwitch-GX* Advantages
Light Load Operation	Cycle skipping	Frequency and duty cycle reduction	• Improves light load efficiency • Reduces no-load consumption
Line Sensing/Externally Set Current Limit (Y, R and F Packages)	Line sensing and externally set current limit mutually exclusive (M pin)	Line sensing and externally set current limit possible simultaneously (functions split onto L and X pins	• Additional design flexibility allows all features to be used simultaneously
Current Limit Programming Range	100% to 40%	100% to 30%	• Minimizes transformer core size in highly continuous designs
P/G Package Current Limits	Identical to Y package	TOP243-246 P and G packages internal current limits reduced	• Matches device current limit to package dissipation capability • Allows more continuous design to lower device dissipation (lower RMS currents)
Y/R/F Package Current Limits	100% (R and F package N/A*)	90% (for equivalent $R_{DS(ON)}$)	• Minimizes transformer core size • Optimizes efficiency for most applications
Thermal Shutdown	125 °C min. 70 °C hysteresis	130 °C min. 75 °C hysteresis	• Allows higher output powers in high ambient temperature applications
Maximum Duty Cycle Reduction Threshold	90 µA	60 µA	• Reduces output line frequency ripple at low line • DC_{MAX} reduction optimized for forward designs using TOP248, TOP249 and TOP250
Line Under-Voltage Negative (turn-off) Threshold	N/A*	40% of positive (turn-on) threshold	• Provides a well defined turn-off threshold as the line voltage falls
Soft-Start	10 ms (duty cycle)	10 ms (duty cycle + current limit)	• Gradually increasing current limit in addition to duty cycle during soft-start further reduces peak current and voltage • Further reduces component stresses during start up

Table 5. Comparison Between TOPSwitch-FX and TOPSwitch-GX. *Not available

TOPSwitch-FX vs. *TOPSwitch-GX*

Table 5 compares the features and performance differences between *TOPSwitch-GX* and *TOPSwitch-FX*. Many of the new features eliminate the need for additional discrete components. Other features increase the robustness of design, allowing cost savings in the transformer and other power components.

TOPSwitch-GX Design Considerations

Power Table

Data sheet power table (Table 1) represents the maximum practical continuous output power based on the following conditions: TOP242 to TOP246: 12 V output, Schottky output diode, 150 V reflected voltage (V_{OR}) and efficiency estimates from curves contained in application note AN-29. TOP247 to TOP250: Higher output voltages, with a maximum output current of 6 A.

For all devices, a 100 VDC minimum for 85-265 VAC and 250 VDC minimum for 230 VAC are assumed and sufficient heat sinking to keep device temperature ≤100 °C. Power levels shown in the power table for the R package device assume 6.45 cm^2 of 610 g/m^2 copper heat sink area in an enclosed adapter, or 19.4 cm^2 in an open frame.

***TOPSwitch-GX* Selection**

Selecting the optimum *TOPSwitch-GX* depends upon required maximum output power, efficiency, heat sinking constraints and cost goals. With the option to externally reduce current limit, a larger *TOPSwitch-GX* may be used for lower power applications where higher efficiency is needed or minimal heat sinking is available.

Input Capacitor
The input capacitor must be chosen to provide the minimum DC voltage required for the *TOPSwitch-GX* converter to maintain regulation at the lowest specified input voltage and maximum output power. Since *TOPSwitch-GX* has a higher DC_{MAX} than *TOPSwitch-II*, it is possible to use a smaller input capacitor. For *TOPSwitch-GX,* a capacitance of 2 µF per watt is possible for universal input with an appropriately designed transformer.

Primary Clamp and Output Reflected Voltage V_{OR}
A primary clamp is necessary to limit the peak *TOPSwitch-GX* drain to source voltage. A Zener clamp requires few parts and takes up little board space. For good efficiency, the clamp Zener should be selected to be at least 1.5 times the output reflected voltage V_{OR}, as this keeps the leakage spike conduction time short. When using a Zener clamp in a universal input application, a V_{OR} of less than 135 V is recommended to allow for the absolute tolerances and temperature variations of the Zener. This will ensure efficient operation of the clamp circuit and will also keep the maximum drain voltage below the rated breakdown voltage of the *TOPSwitch-GX* MOSFET.

A high V_{OR} is required to take full advantage of the wider DC_{MAX} of *TOPSwitch-GX*. An RCD clamp provides tighter clamp voltage tolerance than a Zener clamp and allows a V_{OR} as high as 150 V. RCD clamp dissipation can be minimized by reducing the external current limit as a function of input line voltage (see Figures 21 and 35). The RCD clamp is more cost effective than the Zener clamp but requires more careful design (see Quick Design Checklist).

Output Diode
The output diode is selected for peak inverse voltage, output current, and thermal conditions in the application (including heatsinking, air circulation, etc.). The higher DC_{MAX} of *TOPSwitch-GX,* along with an appropriate transformer turns ratio, can allow the use of a 60 V Schottky diode for higher efficiency on output voltages as high as 15 V (see Figure 41: A 12 V, 30 W design using a 60 V Schottky for the output diode).

Bias Winding Capacitor
Due to the low frequency operation at no-load a 1 µF bias winding capacitor is recommended.

Soft-Start
Generally, a power supply experiences maximum stress at start-up before the feedback loop achieves regulation. For a period of 10 ms, the on-chip soft-start linearly increases the duty cycle from zero to the default DC_{MAX} at turn on. In addition, the primary current limit increases from 85% to 100% over the same period. This causes the output voltage to rise in an orderly manner, allowing time for the feedback loop to take control of the duty cycle. This reduces the stress on the *TOPSwitch-GX* MOSFET, clamp circuit and output diode(s), and helps prevent transformer saturation during start-up. Also, soft-start limits the amount of output voltage overshoot and, in many applications, eliminates the need for a soft-finish capacitor.

EMI
The frequency jitter feature modulates the switching frequency over a narrow band as a means to reduce conducted EMI peaks associated with the harmonics of the fundamental switching frequency. This is particularly beneficial for average detection mode. As can be seen in Figure 46, the benefits of jitter increase with the order of the switching harmonic due to an increase in frequency deviation.

The FREQUENCY pin of *TOPSwitch-GX* offers a switching frequency option of 132 kHz or 66 kHz. In applications that require heavy snubbers on the drain node for reducing high

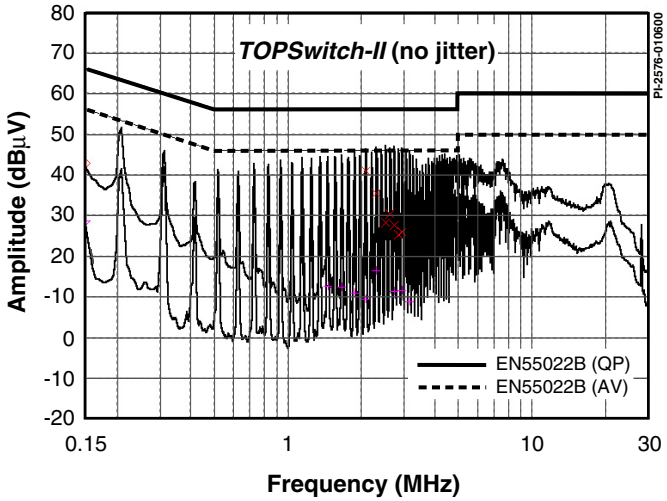

Figure 46a. TOPSwitch-II Full Range EMI Scan (100 kHz, No Jitter).

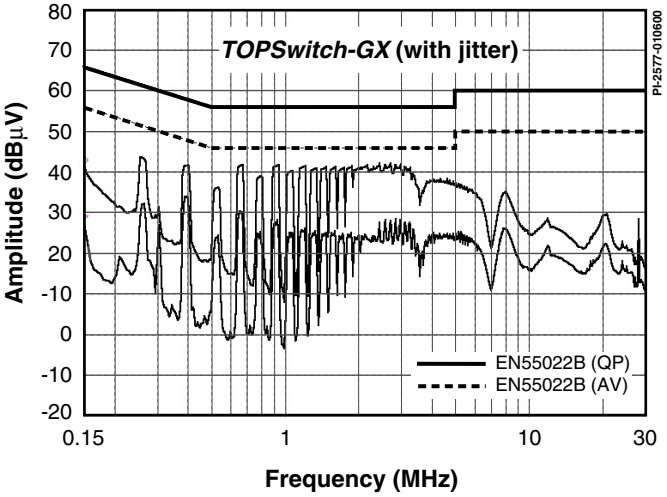

Figure 46b. TOPSwitch-GX Full Range EMI Scan (132 kHz, With Jitter) with Identical Circuitry and Conditions.

frequency radiated noise (for example, video noise sensitive applications such as VCR, DVD, monitor, TV, etc.), operating at 66 kHz will reduce snubber loss resulting in better efficiency. Also, in applications where transformer size is not a concern, use of the 66 kHz option will provide lower EMI and higher efficiency. Note that the second harmonic of 66 kHz is still below 150 kHz, above which the conducted EMI specifications get much tighter.

For 10 W or below, it is possible to use a simple inductor in place of a more costly AC input common mode choke to meet worldwide conducted EMI limits.

Transformer Design
It is recommended that the transformer be designed for maximum operating flux density of 3000 Gauss and a peak flux density of 4200 Gauss at maximum current limit. The turns ratio should be chosen for a reflected voltage (V_{OR}) no greater than 135 V when using a Zener clamp, or 150 V (max) when using an RCD clamp with current limit reduction with line voltage (overload protection).

For designs where operating current is significantly lower than the default current limit, it is recommended to use an externally set current limit close to the operating peak current to reduce peak flux density and peak power (see Figures 20 and 34). In most applications, the tighter current limit tolerance, higher switching frequency and soft-start features of *TOPSwitch-GX* contribute to a smaller transformer when compared to *TOPSwitch-II*.

Standby Consumption
Frequency reduction can significantly reduce power loss at light or no load, especially when a Zener clamp is used. For very low secondary power consumption, use a TL431 regulator for feedback control. Alternately, switching losses can be significantly reduced by changing from 132 kHz in normal operation to 66 kHz under light load conditions.

TOPSwitch-GX Layout Considerations

As *TOPSwitch-GX* has additional pins and operates at much higher power levels compared to previous *TOPSwitch* families, the following guidelines should be carefully followed.

Primary Side Connections
Use a single point (Kelvin) connection at the negative terminal of the input filter capacitor for the *TOPSwitch-GX* SOURCE pin and bias winding return. This improves surge capabilities by returning surge currents from the bias winding directly to the input filter capacitor.

The CONTROL pin bypass capacitor should be located as close as possible to the SOURCE and CONTROL pins and its SOURCE connection trace should not be shared by the main MOSFET switching currents. All SOURCE pin referenced components connected to the MULTI-FUNCTION, LINE-SENSE or EXTERNAL CURRENT LIMIT pins should also be located closely between their respective pin and SOURCE. Once again, the SOURCE connection trace of these components should not be shared by the main MOSFET switching currents. It is very critical that SOURCE pin switching currents are returned to the input capacitor negative terminal through a seperate trace that is not shared by the components connected to CONTROL, MULTI-FUNCTION, LINE-SENSE or EXTERNAL CURRENT LIMIT pins. This is because the SOURCE pin is also the controller ground reference pin.

Any traces to the M, L or X pins should be kept as short as possible and away from the DRAIN trace to prevent noise coupling. LINE-SENSE resistor (R1 in Figures 47-49) should be located close to the M or L pin to minimize the trace length on the M or L pin side.

In addition to the 47 µF CONTROL pin capacitor, a high frequency bypass capacitor in parallel may be used for better noise immunity. The feedback optocoupler output should also be located close to the CONTROL and SOURCE pins of *TOPSwitch-GX*.

Y-Capacitor
The Y-capacitor should be connected close to the secondary output return pin(s) and the positive primary DC input pin of the transformer.

Heat Sinking
The tab of the Y package (TO-220) or F package (TO-262) is internally electrically tied to the SOURCE pin. To avoid circulating currents, a heat sink attached to the tab should not be electrically tied to any primary ground/source nodes on the PC board.

When using a P (DIP-8), G (SMD-8) or R (TO-263) package, a copper area underneath the package connected to the SOURCE pins will act as an effective heat sink. On double sided boards (Figure 49), top side and bottom side areas connected with vias can be used to increase the effective heat sinking area.

In addition, sufficient copper area should be provided at the anode and cathode leads of the output diode(s) for heat sinking.

In Figures 47, 48 and 49, a narrow trace is shown between the output rectifier and output filter capacitor. This trace acts as a thermal relief between the rectifier and filter capacitor to prevent excessive heating of the capacitor.

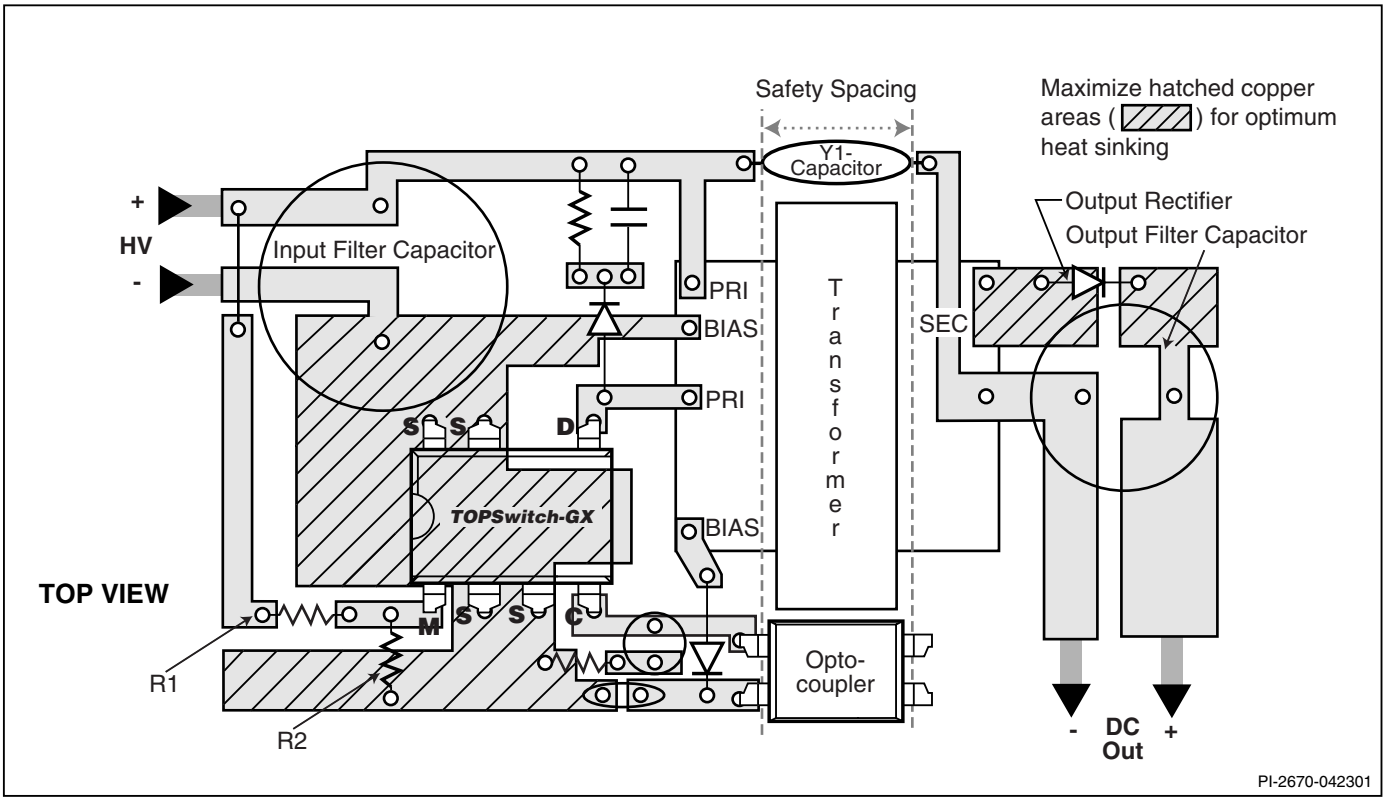

Figure 47. Layout Consideratiions for TOPSwitch-GX using P or G Package.

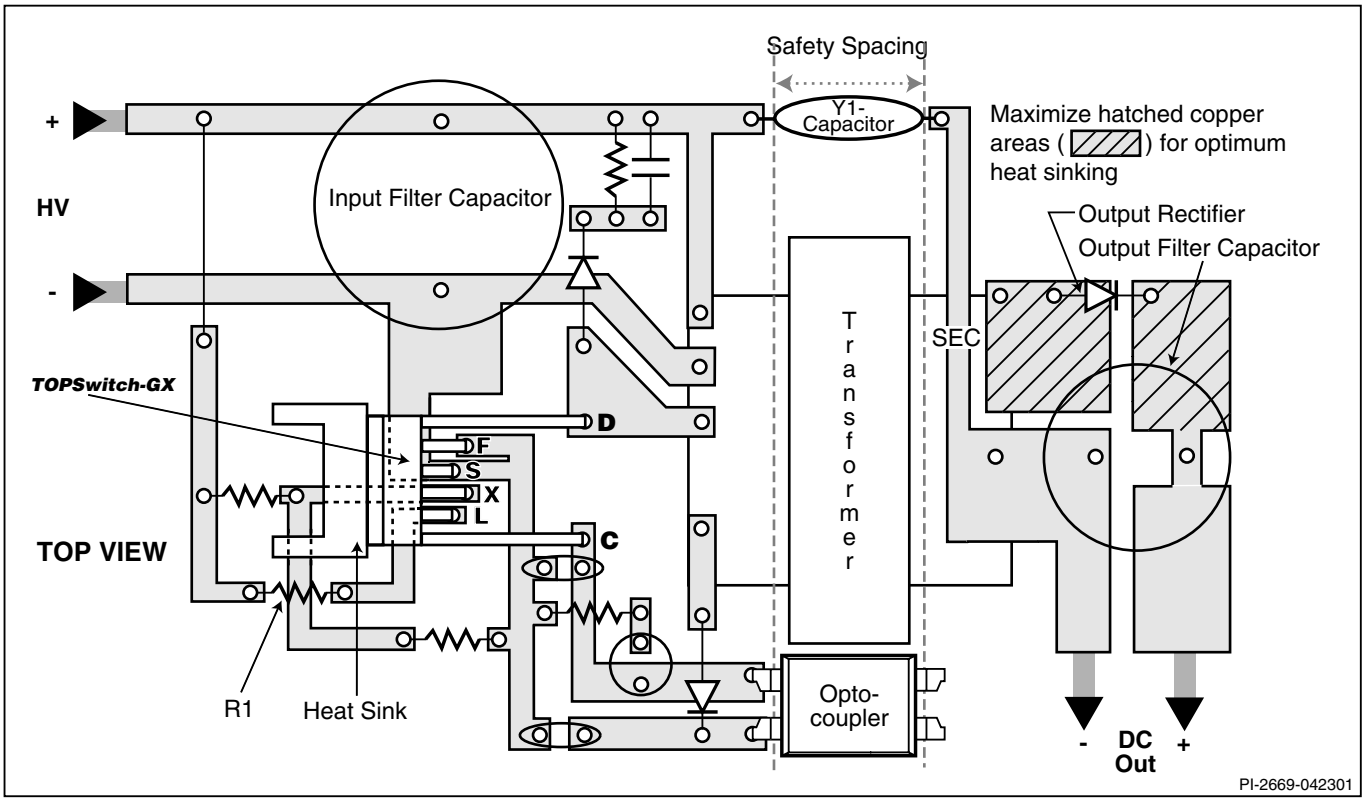

Figure 48. Layout Consideratiions for TOPSwitch-GX using Y or F Package.

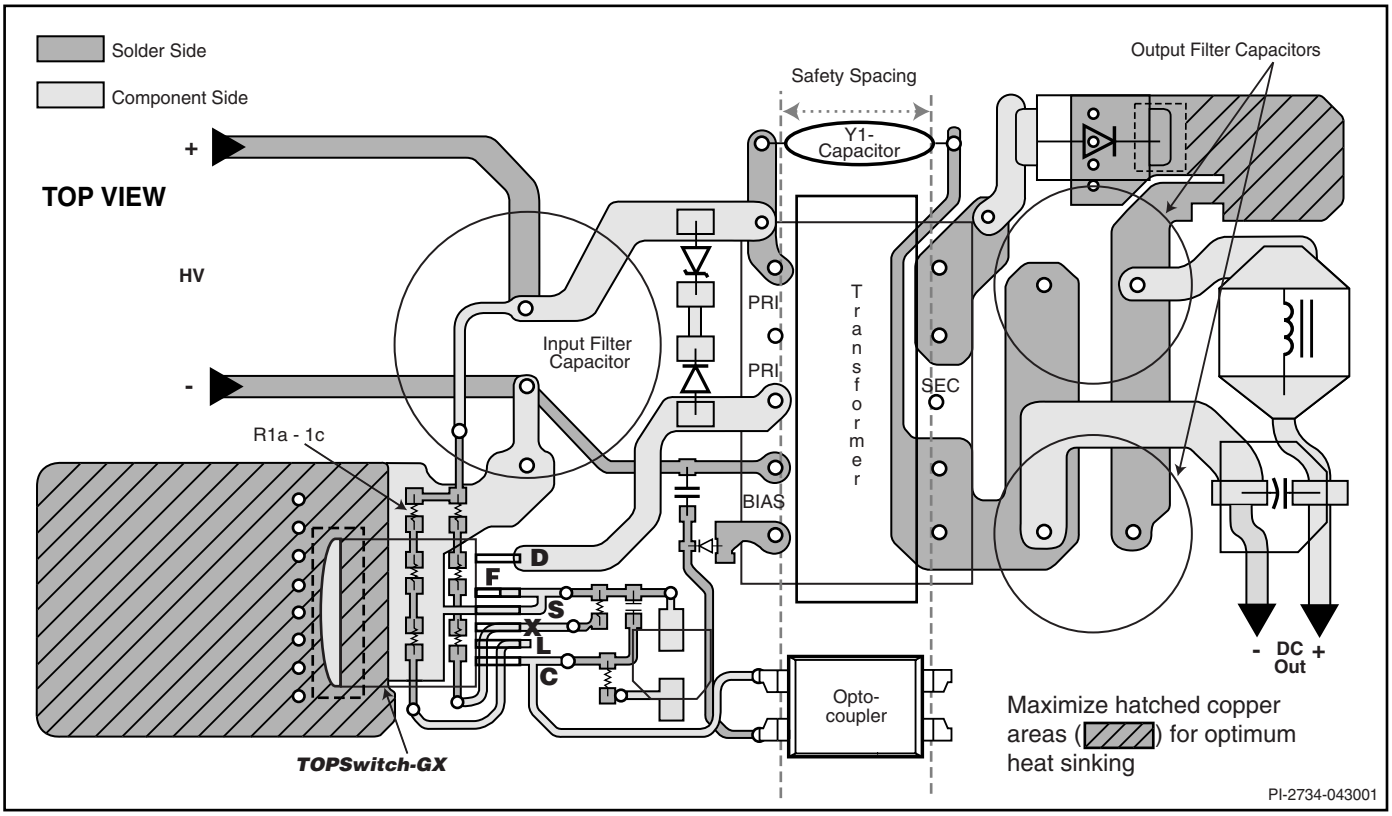

Figure 49. Layout Considerations for TOPSwitch-GX using R Package.

Quick Design Checklist

As with any power supply design, all *TOPSwitch-GX* designs should be verified on the bench to make sure that components specifications are not exceeded under worst case conditions. The following minimum set of tests is strongly recommended:

1. Maximum drain voltage – Verify that peak V_{DS} does not exceed 675 V at highest input voltage and maximum overload output power. Maximum overload output power occurs when the output is overloaded to a level just before the power supply goes into auto-restart (loss of regulation).

2. Maximum drain current – At maximum ambient temperature, maximum input voltage and maximum output load, verify drain current waveforms at start-up for any signs of transformer saturation and excessive leading edge current spikes. *TOPSwitch-GX* has a leading edge blanking time of 220 ns to prevent premature termination of the ON-cycle. Verify that the leading edge current spike is below the allowed current limit envelope (see Figure 52) for the drain current waveform at the end of the 220 ns blanking period.

3. Thermal check – At maximum output power, minimum input voltage and maximum ambient temperature, verify that temperature specifications are not exceeded for *TOPSwitch-GX*, transformer, output diodes and output capacitors. Enough thermal margin should be allowed for the part-to-part variation of the $R_{DS(ON)}$ of *TOPSwitch-GX,* as specified in the data sheet. The margin required can either be calculated from the tolerances or it can be accounted for by connecting an external resistance in series with the DRAIN pin and attached to the same heatsink, having a resistance value that is equal to the difference between the measured $R_{DS(ON)}$ of the device under test and the worst case maximum specification.

Design Tools

For a discussion on utilizing TOP248, TOP249 and TOP250 in forward converter configurations, please refer to the *TOPSwitch-GX* Forward Design Methodology Application Note.

Up-to-date information on design tools can be found at the Power Integrations website: *www.powerint.com*

ABSOLUTE MAXIMUM RATINGS[1,4]

DRAIN Voltage ..... -0.3 V to 700 V
DRAIN Peak Current: TOP242.....0.72 A
TOP243..... 1.44 A
TOP244.....2.16 A
TOP245..... 2.88 A
TOP246.....4.32 A
TOP247.....5.76 A
TOP248.....7.20 A
TOP249.....8.64 A
TOP250.....10.08 A
CONTROL Voltage ..... -0.3 V to 9
VCONTROL Current ..... 100 mA
LINE SENSE Pin Voltage ..... -0.3 V to 9 V
CURRENT LIMIT Pin Voltage .....-0.3 V to 4.5 V
MULTI-FUNCTION Pin Voltage .....-0.3 V to 9 V
FREQUENCY Pin Voltage .....-0.3 V to 9 V
Storage Temperature ..... -65 °C to 150 °C
Operating Junction Temperature[2] ..... -40 °C to 150 °C
Lead Temperature[3] ..... 260 °C

Notes:
1. All voltages referenced to SOURCE, T_A = 25 °C.
2. Normally limited by internal circuitry.
3. 1/16 in. from case for 5 seconds.
4. Maximum ratings specified may be applied one at a time, without causing permanent damage to the product. Exposure to Absolute Maximum Rating conditions for extended periods of time may affect product reliability.

THERMAL IMPEDANCE

Thermal Impedance: Y or F Package:
(θ_{JA})[1] ..... 80 °C/W
(θ_{JC})[2] ..... 2 °C/W
P or G Package:
(θ_{JA}) ..... 70 °C/W[3]; 60 °C/W[4]
(θ_{JC})[5]..... 11 °C/W
R Package:
(θ_{JA}) .....80 °C/W[7]; 40 °C/W[4]; 30 °C/W[6]
(θ_{JC})[5]..... 2 °C/W

Notes:
1. Free standing with no heatsink.
2. Measured at the back surface of tab.
3. Soldered to 0.36 sq. in. (232 mm^2), 2 oz. (610 g/m^2) copper clad.
4. Soldered to 1 sq. in. (645 mm^2), 2 oz. (610 g/m^2) copper clad.
5. Measured on the SOURCE pin close to plastic interface.
6. Soldered to 3 sq. in. (1935 mm^2), 2 oz. (610 g/m^2) copper clad.
7. Soldered to foot print area, 2 oz. (610 g/m^2) copper clad.

Parameter	Symbol	Conditions SOURCE = 0 V; T_J = -40 to 125 °C See Figure 53 (Unless Otherwise Specified)		Min	Typ	Max	Units
CONTROL FUNCTIONS							
Switching Frequency (average)	f_{OSC}	I_C = 3 mA; T_J = 25 °C	FREQUENCY Pin Connected to SOURCE	124	132	140	kHz
			FREQUENCY Pin Connected to CONTROL	61.5	66	70.5	
Duty Cycle at ONSET of Frequency Reduction	$DC_{(ONSET)}$				10		%
Switching Frequency near 0% Duty Cycle	$f_{OSC(DMIN)}$		132 kHz Operation		30		kHz
			66 kHz Operation		15		
Frequency Jitter Deviation	Δf		132 kHz Operation		±4		kHz
			66 kHz Operation		±2		
Frequency Jitter Modulation Rate	f_M				250		Hz

Parameter	Symbol	Conditions SOURCE = 0 V; T_J = -40 to 125 °C See Figure 53 (Unless Otherwise Specified)		Min	Typ	Max	Units
CONTROL FUNCTIONS (cont.)							
Maximum Duty Cycle	DC_{MAX}	$I_C = I_{CD1}$	$I_L \le I_{L(DC)}$ or $I_M \le I_{M(DC)}$	75	78	83	%
			I_L or I_M = 190 µA TOP242-247	28	38	50	
			I_L or I_M = 100 µA TOP242-247		66.5		
			I_L = 190 µA TOP248-250	33	41.3	49.5	
			I_L = 100 µA TOP248-250	60	66.8	73.5	
Soft-Start Time	t_{SOFT}	T_J = 25 °C; DC_{MIN} to DC_{MAX}			10	15	ms
PWM Gain	DC_{reg}	I_C = 4 mA; T_J = 25 °C		-28	-23	-18	%/mA
PWM Gain Temperature Drift		See Note A			-0.01		%/mA/°C
External Bias Current	I_B	See Figure 7	TOP242-245	1.2	2.0	3.0	mA
			TOP246-249	1.6	2.6	4.0	
			TOP250	1.7	2.7	4.2	
CONTROL Current at 0% Duty Cycle	$I_{C(OFF)}$	T_J = 25 °C	TOP242-245		6.0	7.0	mA
			TOP246-249		6.6	8.0	
			TOP250		7.3	8.5	
Dynamic Impedance	Z_C	I_C = 4 mA; T_J = 25 °C See Figure 51		10	15	22	Ω
Dynamic Impedance Temperature Drift					0.18		%/°C
CONTROL Pin Internal Filter Pole					7		kHz
SHUTDOWN/AUTO-RESTART							
CONTROL Pin Charging Current	$I_{C(CH)}$	T_J = 25 °C	V_C = 0 V	-5.0	-3.5	-2.0	mA
			V_C = 5 V	-3.0	-1.8	-0.6	
Charging Current Temperature Drift		See Note A			0.5		%/°C
Auto-Restart Upper Threshold Voltage	$V_{C(AR)U}$				5.8		V
Auto-Restart Lower Threshold Voltage	$V_{C(AR)L}$			4.5	4.8	5.1	V

Parameter	Symbol	Conditions SOURCE = 0 V; T_J = -40 to 125 °C See Figure 53 (Unless Otherwise Specified)		Min	Typ	Max	Units
SHUTDOWN/AUTO-RESTART (cont.)							
Auto-Restart Hysteresis Voltage	$V_{C(AR)hyst}$			0.8	1.0		V
Auto-Restart Duty Cycle	$DC_{(AR)}$				4	8	%
Auto-Restart Frequency	$f_{(AR)}$				1.0		Hz
MULTI-FUNCTION (M), LINE-SENSE (L) AND EXTERNAL CURRENT LIMIT (X) INPUTS							
Line Under-Voltage Threshold Current and Hysteresis (M or L Pin)	I_{UV}	T_J = 25 °C	Threshold	44	50	54	µA
			Hysteresis		30		µA
Line Overvoltage or Remote ON/OFF Threshold Current and Hysteresis (M or L Pin)	I_{OV}	T_J = 25 °C	Threshold	210	225	240	µA
			Hysteresis		8		µA
L Pin Voltage Threshold	$V_{L(TH)}$			0.5	1.0	1.6	V
Remote ON/OFF Negative Threshold Current and Hysteresis (M or X Pin)	$I_{REM (N)}$	T_J = 25 °C	Threshold	-35	-27	-20	µA
			Hysteresis		5		µA
L or M Pin Short Circuit Current	$I_{L(SC)}$ or $I_{M(SC)}$	V_L, V_M = V_C		300	400	520	µA
X or M Pin Short Circuit Current	$I_{X(SC)}$ or $I_{M(SC)}$	V_X, V_M = 0 V	Normal Mode	-300	-240	-180	µA
			Auto-Restart Mode	-110	-90	-70	
L or M Pin Voltage (Positive Current)	V_L, V_M		I_L or I_M = 50 µA	1.90	2.50	3.00	V
			I_L or I_M = 225 µA	2.30	2.90	3.30	
X Pin Voltage (Negative Current)	V_X		I_X = -50 µA	1.26	1.33	1.40	V
			I_X = -150 µA	1.18	1.24	1.30	
M Pin Voltage (Negative Current)	V_M		I_M = -50 µA	1.24	1.31	1.39	V
			I_M = -150 µA	1.13	1.19	1.25	

Parameter	Symbol	Conditions SOURCE = 0 V; T_J = -40 to 125 °C See Figure 53 (Unless Otherwise Specified)		Min	Typ	Max	Units
MULTI-FUNCTION, LINSE-SENSE AND EXTERNAL CURRENT LIMIT INPUTS (cont.)							
Maximum Duty Cycle Reduction Onset Threshold Current	$I_{L(DC)}$ or $I_{M(DC)}$	T_J = 25 °C		40	60	75	µA
Remote OFF DRAIN Supply Current	$I_{D(RMT)}$	See Figure 71 V_{DRAIN} = 150 V	X, L or M Pin Floating		0.6	1.0	mA
			L or M Pin Shorted to CONTROL		1.0	1.6	
Remote ON Delay	$t_{R(ON)}$	From Remote ON to Drain Turn-On See Note B			2.5		µs
Remote OFF Setup Time	$t_{R(OFF)}$	Minimum Time Before Drain Turn-On to Disable Cycle, See Note B			2.5		µs
FREQUENCY INPUT							
FREQUENCY Pin Threshold Voltage	V_F	See Note B			2.9		V
FREQUENCY Pin Input Current	I_F	$V_F = V_C$		10	40	100	µA
CIRCUIT PROTECTION							
Self Protection Current Limit (See Note C)	I_{LIMIT}	TOP242 P/G TOP242 Y/R/F T_J = 25 °C	Internal di/dt = 90 mA/µs	0.418	0.45	0.481	A
		TOP243 P/G T_J = 25 °C	Internal di/dt = 150 mA/µs	0.697	0.75	0.802	
		TOP243 Y/R/F T_J = 25 °C	Internal di/dt = 180 mA/µs	0.837	0.90	0.963	
		TOP244 P/G T_J = 25 °C	Internal di/dt = 200 mA/µs	0.930	1.00	1.070	
		TOP244 Y/R/F T_J = 25 °C	Internal di/dt = 270 mA/µs	1.256	1.35	1.445	
		TOP245 P/G T_J = 25 °C	Internal di/dt = 220 mA/µs	1.02	1.10	1.18	
		TOP245 Y/R/F T_J = 25 °C	Internal di/dt = 360 mA/µs	1.674	1.80	1.926	
		TOP246 P/G T_J = 25 °C	Internal di/dt = 270 mA/µs	1.256	1.35	1.445	
		TOP246 Y/R/F T_J = 25 °C	Internal di/dt = 540 mA/µs	2.511	2.70	2.889	
		TOP247 Y/R/F T_J = 25 °C	Internal di/dt = 720 mA/µs	3.348	3.60	3.852	

Parameter	Symbol	Conditions SOURCE = 0 V; T_J = -40 to 125 °C See Figure 53 (Unless Otherwise Specified)		Min	Typ	Max	Units
CIRCUIT PROTECTION (cont.)							
Self Protection Current Limit (See Note C)	I_{LIMIT}	TOP248 Y/R/F T_J = 25 °C	Internal di/dt = 900 mA/µs	4.185	4.50	4.815	A
		TOP249 Y/R/F T_J = 25 °C	Internal di/dt = 1080 mA/µs	5.022	5.40	5.778	
		TOP250 Y/R/F T_J = 25 °C	Internal di/dt = 1260 mA/µs	5.859	6.30	6.741	
Initial Current Limit	I_{INIT}	See Note B	≤85 VAC (Rectified Line Input)	0.75 x $I_{LIMIT(MIN)}$			A
			265 VAC (Rectified Line Input)	0.6 x $I_{LIMIT(MIN)}$			
Leading Edge Blanking Time	t_{LEB}	See Figure 52 T_J = 25 °C, I_C = 4 mA			220		ns
Current Limit Delay	$t_{IL(D)}$	I_C = 4 mA			100		ns
Thermal Shut-down Temperature				130	140	150	°C
Thermal Shut-down Hysteresis					75		°C
Power-Up Reset Threshold Voltage	$V_{C(RESET)}$	Figure 53, S1 Open		1.75	3.0	4.25	V
OUTPUT							
ON-State Resistance	$R_{DS(ON)}$	TOP242 I_D = 50 mA	T_J = 25 °C		15.6	18.0	Ω
			T_J = 100 °C		25.7	30.0	
		TOP243 I_D = 100 mA	T_J = 25 °C		7.80	9.00	
			T_J = 100 °C		12.9	15.0	
		TOP244 I_D = 150 mA	T_J = 25 °C		5.20	6.00	
			T_J = 100 °C		8.60	10.0	
		TOP245 I_D = 200 mA	T_J = 25 °C		3.90	4.50	
			T_J = 100 °C		6.45	7.50	
		TOP246 I_D = 300 mA	T_J = 25 °C		2.60	3.00	
			T_J = 100 °C		4.30	5.00	
		TOP247 I_D = 400 mA	T_J = 25 °C		1.95	2.25	
			T_J = 100 °C		3.22	3.75	
		TOP248 I_D = 500 mA	T_J = 25 °C		1.56	1.80	
			T_J = 100 °C		2.58	3.00	

Parameter	Symbol	Conditions SOURCE = 0 V; T_J = -40 to 125 °C See Figure 53 (Unless Otherwise Specified)		Min	Typ	Max	Units
OUTPUT (cont.)							
ON-State Resistance	$R_{DS(ON)}$	TOP249 I_D = 600 mA	T_J = 25 °C		1.30	1.50	Ω
			T_J = 100 °C		2.15	2.50	
		TOP250 I_D = 700 mA	T_J = 25 °C		1.10	1.28	
			T_J = 100 °C		1.85	2.15	
OFF-State Drain Leakage Current	I_{DSS}	V_L, V_M = Floating; I_C = 4 mA V_{DS} = 560 V; T_J = 125 °C				470	µA
Breakdown Voltage	BV_{DSS}	V_L, V_M = Floating; I_C = 4 mA See Note D, T_J = 25 °C		700			V
Rise Time	t_R	Measured in a Typical Flyback Converter Application			100		ns
Fall Time	t_F				50		ns
SUPPLY VOLTAGE CHARACTERISTICS							
DRAIN Supply Voltage		See Note E		36			V
Shunt Regulator Voltage	$V_{C(SHUNT)}$	I_C = 4 mA		5.60	5.85	6.10	V
Shunt Regulator Temperature Drift					±50		ppm/°C
Control Supply/ Discharge Current	I_{CD1}	Output MOSFET Enabled V_X, V_L, V_M = 0 V	TOP242-245	1.0	1.6	2.5	mA
			TOP246-249	1.2	2.2	3.2	
			TOP250	1.3	2.4	3.65	
	I_{CD2}	Output MOSFET Disabled V_X, V_L, V_M = 0 V		0.3	0.6	1.3	

NOTES:

A. For specifications with negative values, a negative temperature coefficient corresponds to an increase in magnitude with increasing temperature, and a positive temperature coefficient corresponds to a decrease in magnitude with increasing temperature.

B. Guaranteed by characterization. Not tested in production.

C. For externally adjusted current limit values, please refer to Figures 54b, 55b and 56b (Current Limit vs. External Current Limit Resistance) in the Typical Performance Characteristics section. The tolerance specified is only valid at full current limit.

D. Breakdown voltage may be checked against minimum BV_{DSS} specification by ramping the DRAIN pin voltage up to but not exceeding minimum BV_{DSS}.

E. It is possible to start up and operate *TOPSwitch-GX* at DRAIN voltages well below 36 V. However, the CONTROL pin charging current is reduced, which affects start-up time, auto-restart frequency, and auto-restart duty cycle. Refer to Figure 68, the characteristic graph on CONTROL pin charge current (I_C) vs. DRAIN voltage for low voltage operation characteristics.

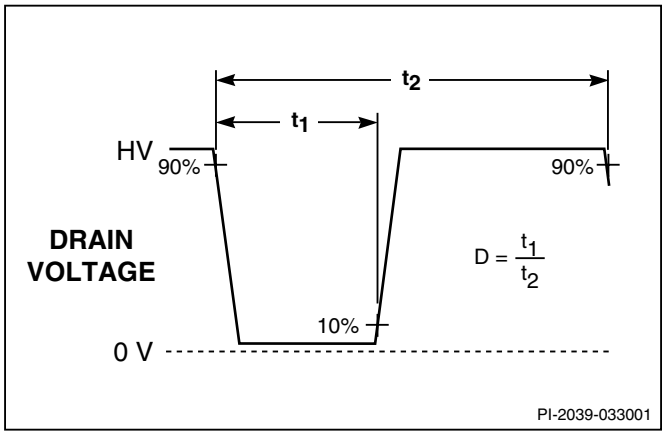

Figure 50. Duty Cycle Measurement.

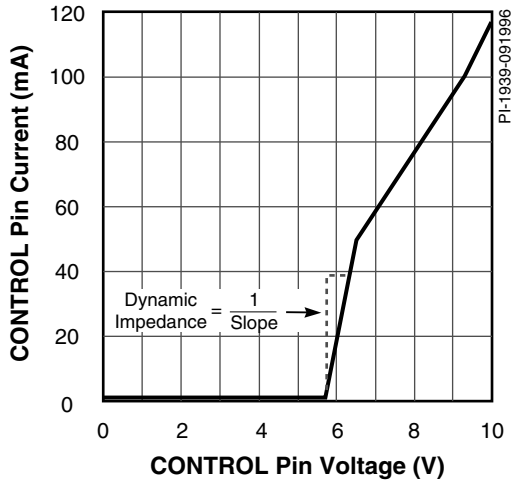

Figure 51. CONTROL Pin I-V Characteristic.

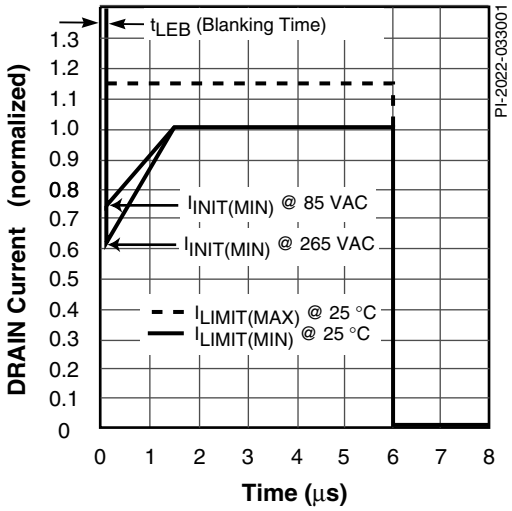

Figure 52. Drain Current Operating Envelope.

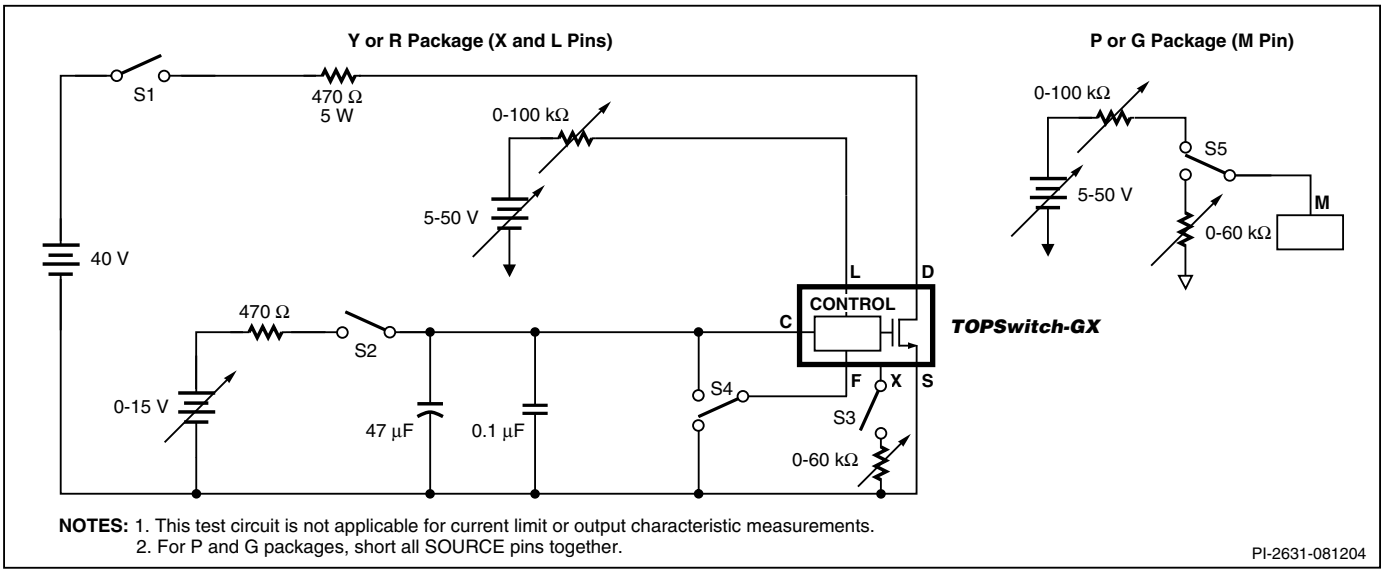

Figure 53. TOPSwitch-GX General Test Circuit.

BENCH TEST PRECAUTIONS FOR EVALUATION OF ELECTRICAL CHARACTERISTICS

The following precautions should be followed when testing *TOPSwitch-GX* by itself outside of a power supply. The schematic shown in Figure 53 is suggested for laboratory testing of *TOPSwitch-GX*.

When the DRAIN pin supply is turned on, the part will be in the auto-restart mode. The CONTROL pin voltage will be oscillating at a low frequency between 4.8 V and 5.8 V and the drain is turned on every eigth cycle of the CONTROL pin oscillation. If the CONTROL pin power supply is turned on while in this auto-restart mode, there is only a 12.5% chance that the CONTROL pin oscillation will be in the correct state (drain active state) so that the continuous drain voltage waveform may be observed. It is recommended that the V_C power supply be turned on first and the DRAIN pin power supply second if continuous drain voltage waveforms are to be observed. The 12.5% chance of being in the correct state is due to the divide-by-8 counter. Temporarily shorting the CONTROL pin to the SOURCE pin will reset *TOPSwitch-GX*, which then will come up in the correct state.

Typical Performance Characteristics

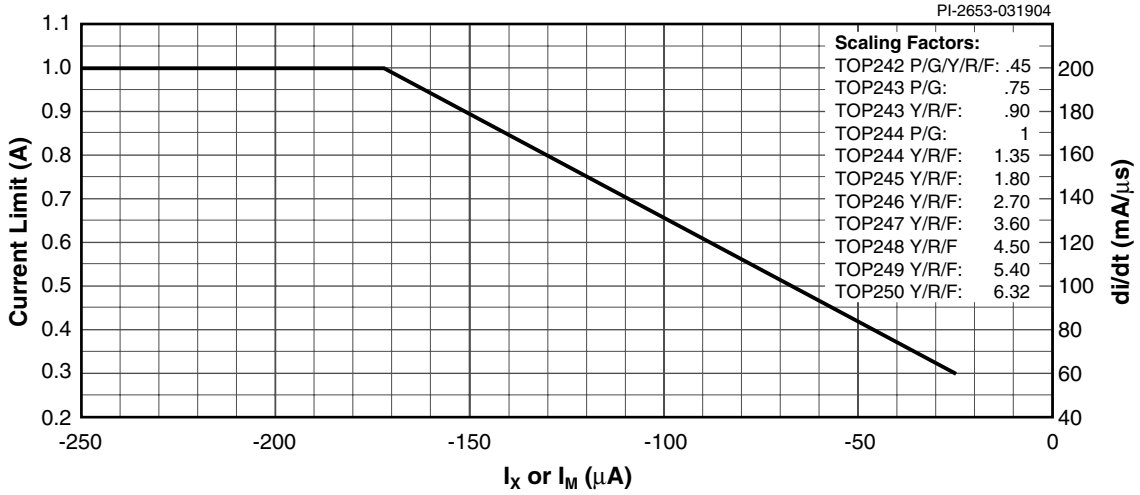

Figure 54a. Current Limit vs. X or M Pin Current (see Figures 55a and 56a for TOP245P/G and TOP246P/G).

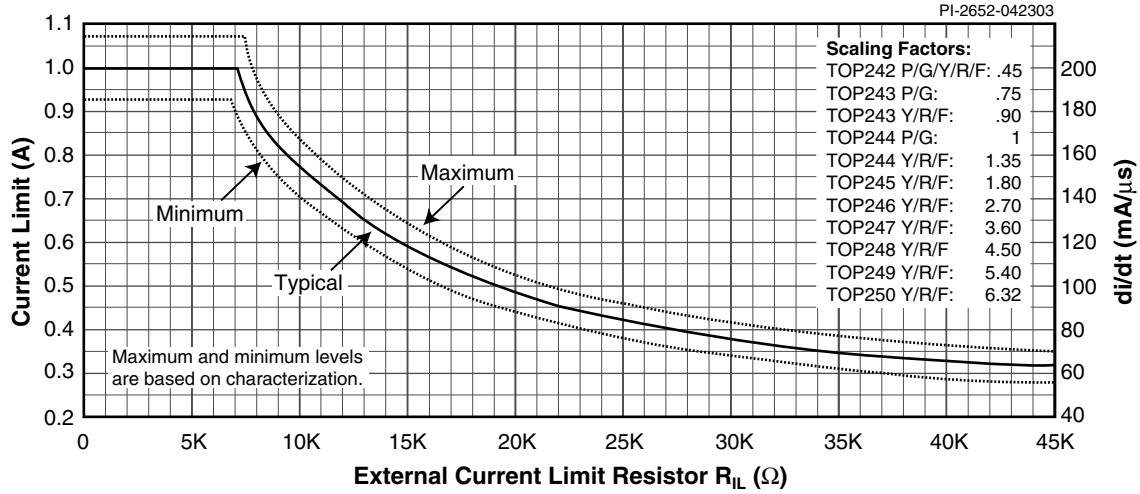

Figure 54b. Current Limit vs. External Current Limit Resistance (see Figures 55b and 56b for TOP245P/G and TOP246P/G).

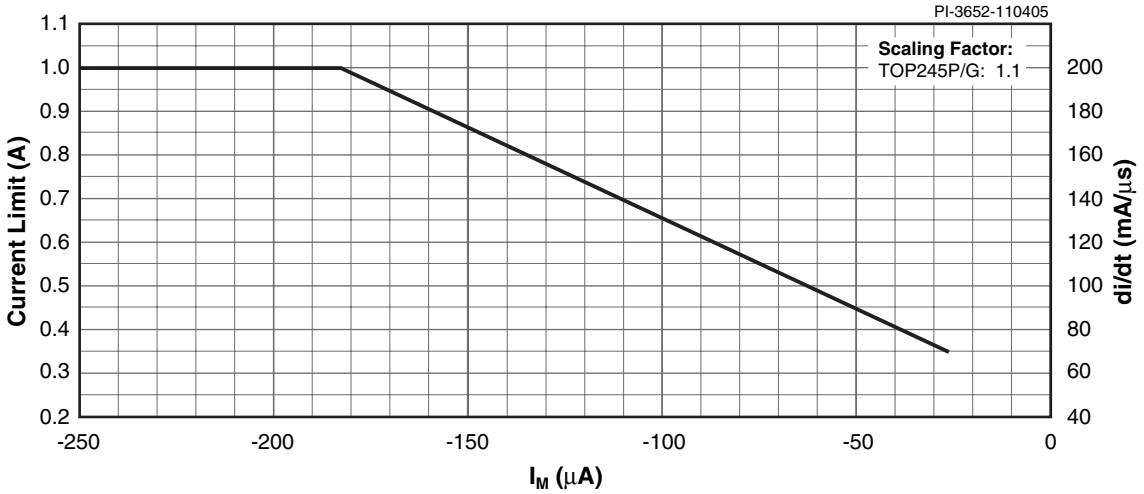

Figure 55a. Current Limit vs. MULTI-FUNCTION Pin Current (TOP245P/G only).

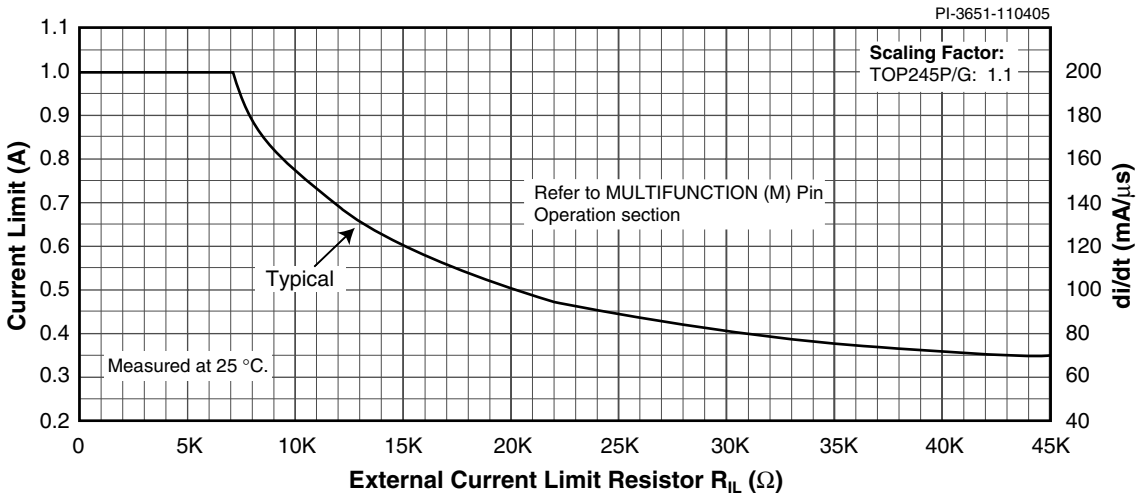

Figure 55b. Current Limit vs. External Current Limit Resistance (TOP245P/G only).

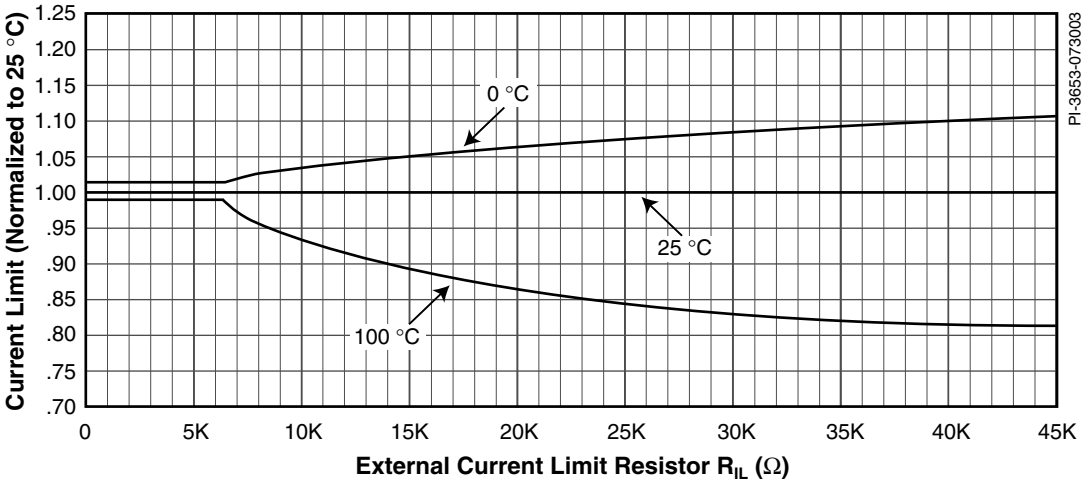

Figure 55c. External Current Limit vs. External Current Limit Resistance at 0 °C, 25 °C and 100 °C Junction Temperature (TOP245P/G only).

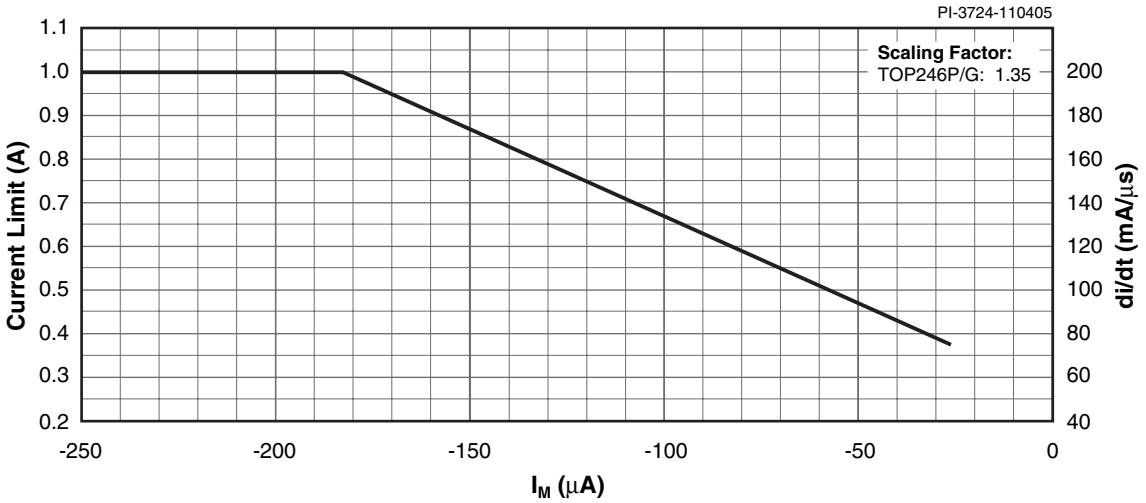

Figure 56a. Current Limit vs. MULTI-FUNCTION Pin Current (TOP246P/G only).

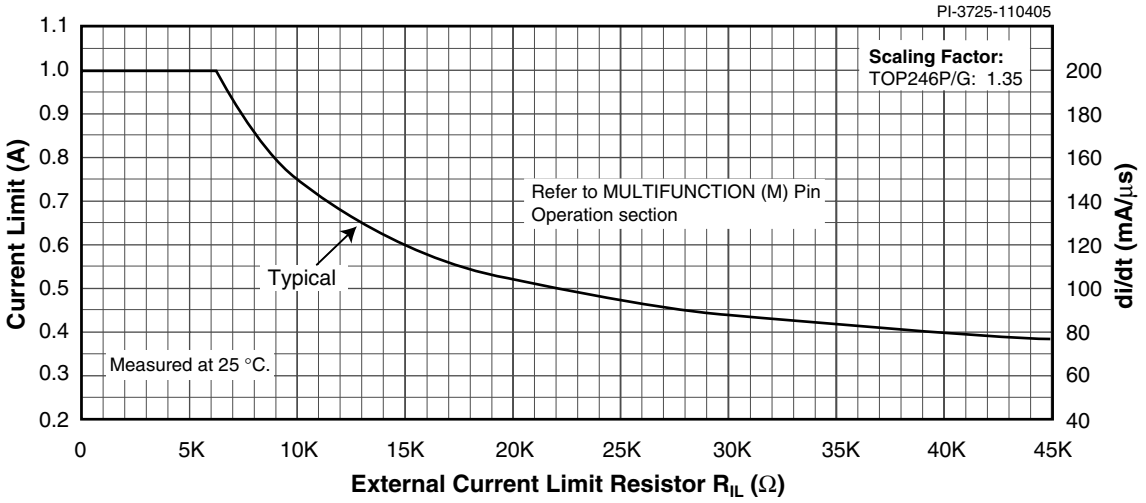

Figure 56b. Current Limit vs. External Current Limit Resistance (TOP246P/G only).

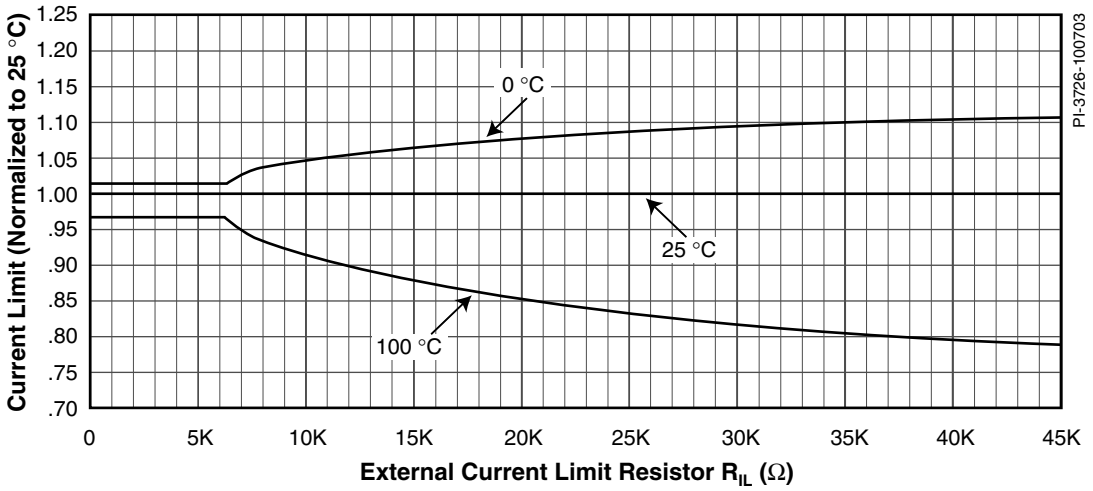

Figure 56c. External Current Limit vs. External Current Limit Resistance at 0 °C, 25 °C and 100 °C Junction Temperature (TOP246P/G only).

Typical Performance Characteristics (cont.)

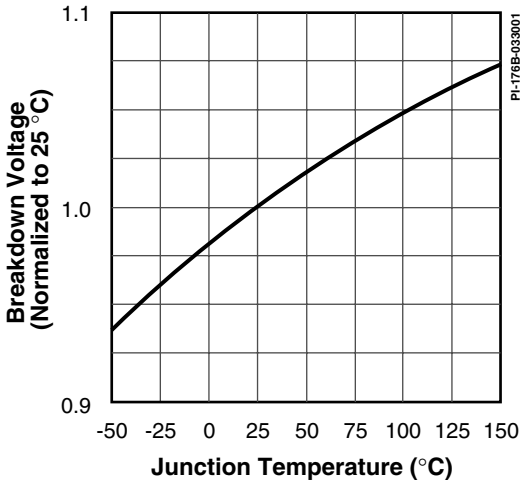

Figure 57. Breakdown Voltage vs. Temperature.

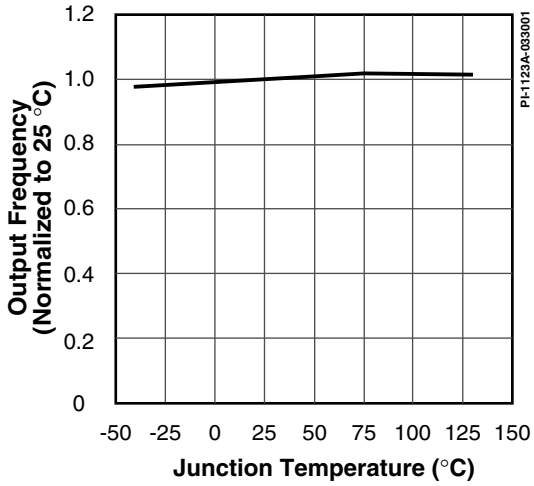

Figure 58. Frequency vs. Temperature.

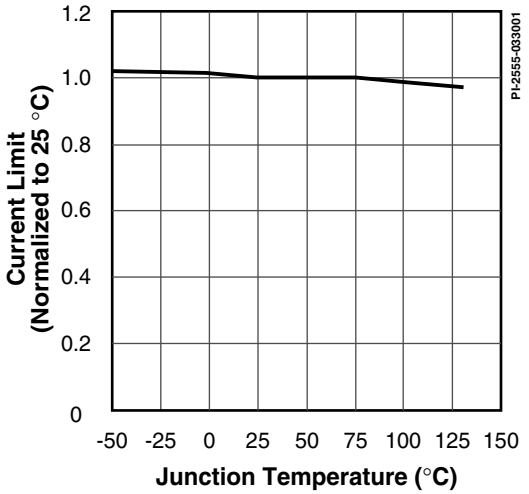

Figure 59. Internal Current Limit vs. Temperature.

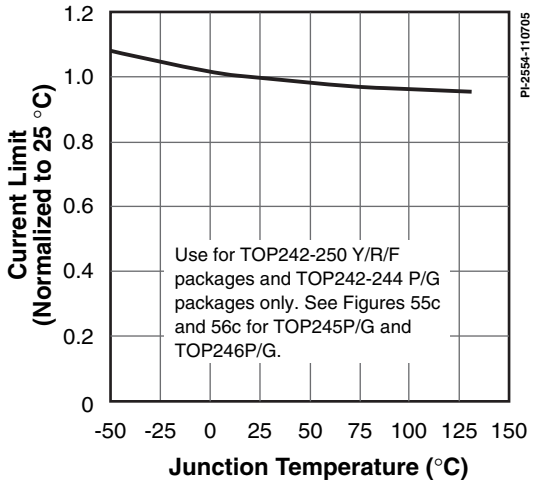

Figure 60. External Current Limit vs. Temperature with R_{IL} = 12 kΩ.

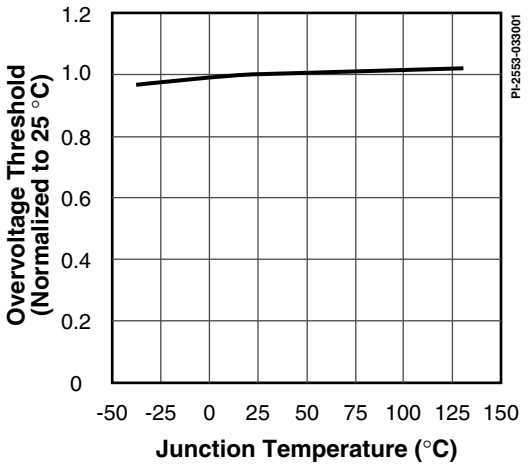

Figure 61. Overvoltage Threshold vs. Temperature.

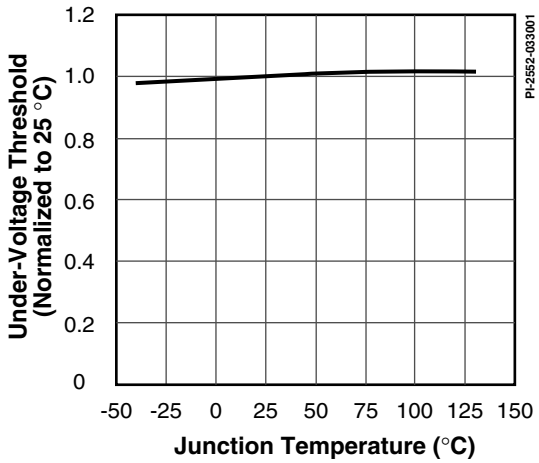

Figure 62. Under-Voltage Threshold vs. Temperature.

Typical Performance Characteristics (cont.)

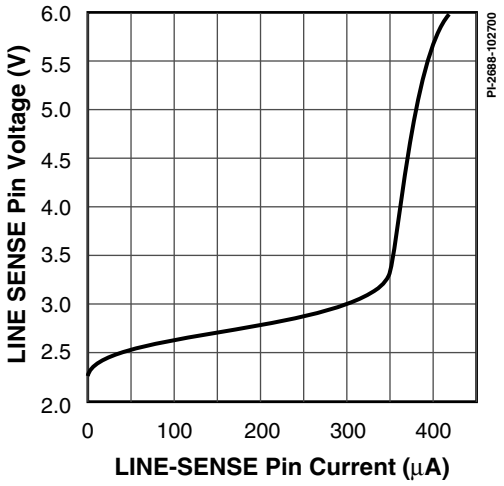

Figure 63a. LINE-SENSE Pin Voltage vs. Current.

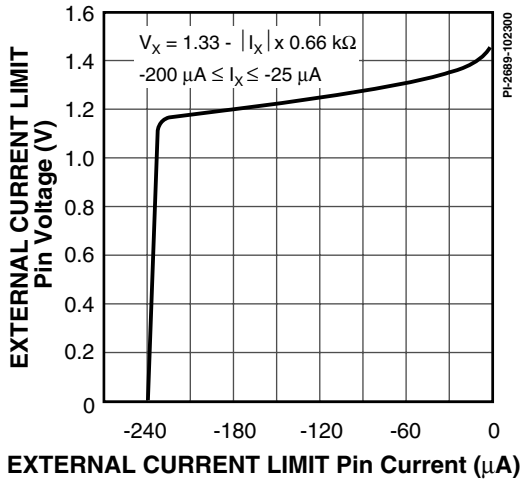

Figure 63b. EXTERNAL CURRENT LIMIT Pin Voltage vs. Current.

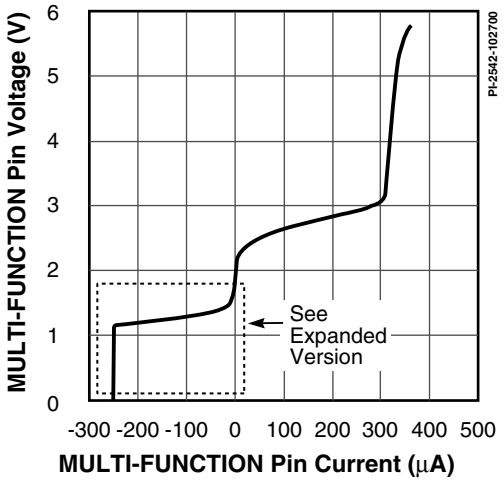

Figure 64a. MULTI-FUNCTION Pin Voltage vs. Current.

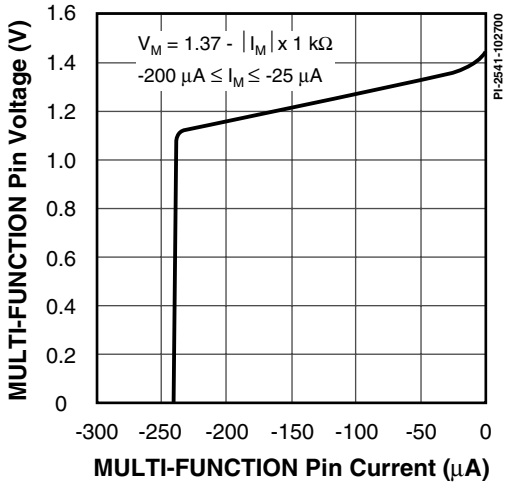

Figure 64b. MULTI-FUNCTION Pin Voltage vs. Current (Expanded).

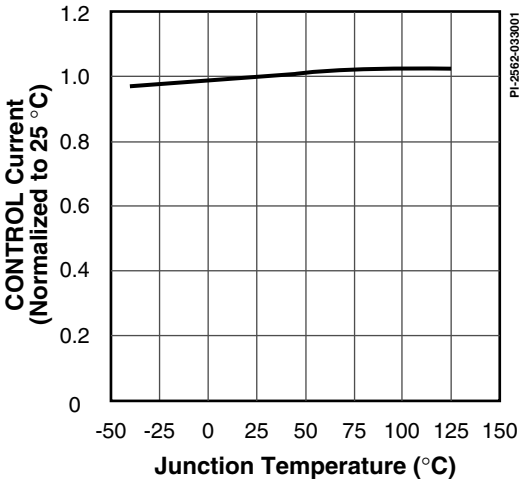

Figure 65. Control Current Out at 0% Duty Cycle vs. Temperaure.

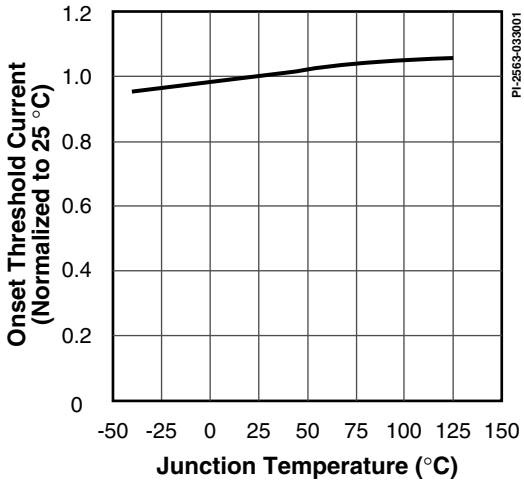

Figure 66. Max. Duty Cycle Reduction Onset Threshold Current vs. Temperature.

Typical Performance Characteristics (cont.)

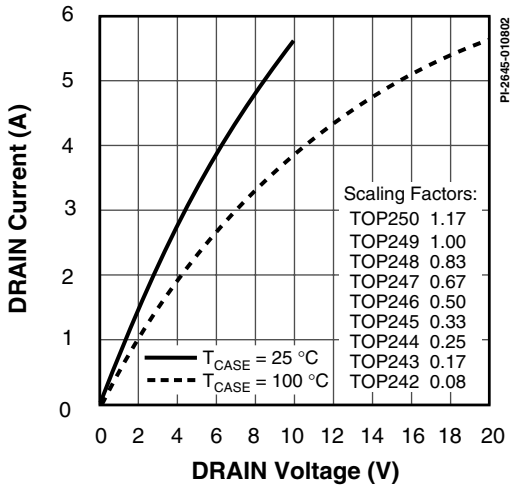

Figure 67. Output Characteristics.

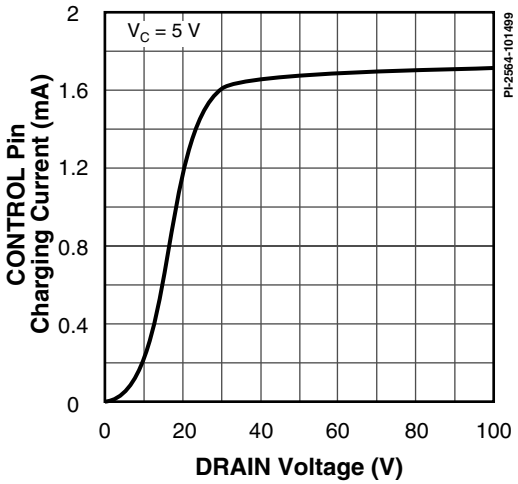

Figure 68. I_C vs. DRAIN Voltage.

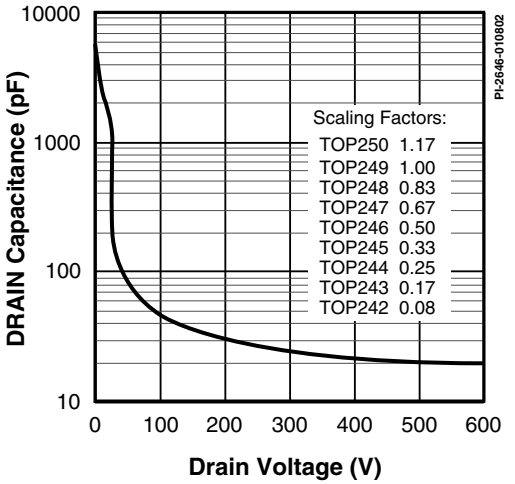

Figure 69. C_{OSS} vs. DRAIN Voltage.

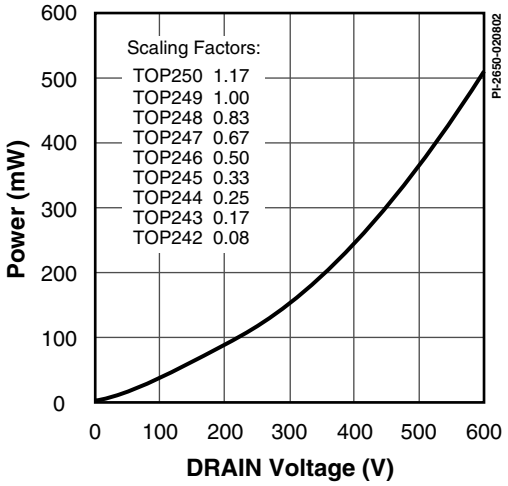

Figure 70. DRAIN Capacitance Power.

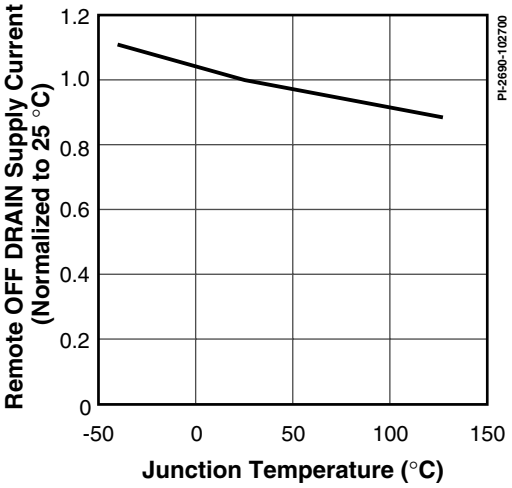

Figure 71. Remote OFF DRAIN Supply Current vs. Temperature.

PART ORDERING INFORMATION

TOP 242 G N - TL

***TOPSwitch* Product Family**		
GX Series Number		
Package Identifier		
G	Plastic SMD-8B	(TOP242-246 only)
P	Plastic DIP-8B	(TOP242-246 only)
Y	Plastic TO-220-7C	
R	Plastic TO-263-7C (available only with TL option)	
F	Plastic TO-262-7C	
Lead Finish		
Blank	Standard (Sn Pb)	
N	Pure Matte Tin (Pb-Free) (P, G, Y & F Packages)	
Tape & Reel and Other Options		
Blank	Standard Configurations	
TL	Tape & Reel, (G Package: 1000 min., R Package: 750 min.)	

TO-220-7C

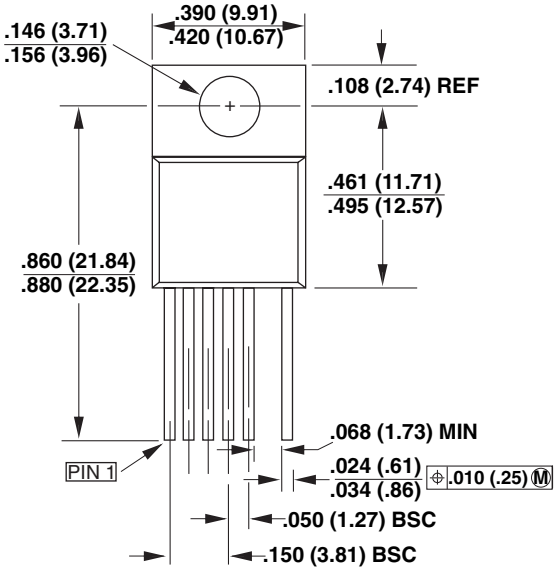

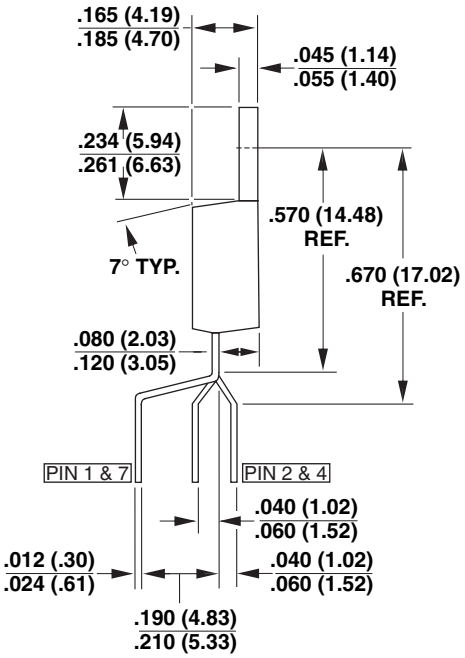

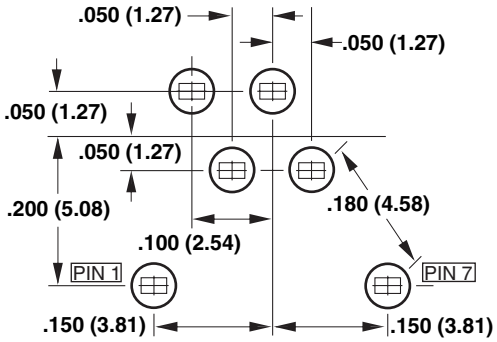

Y07C MOUNTING HOLE PATTERN

Notes:

1. Controlling dimensions are inches. Millimeter dimensions are shown in parentheses.
2. Pin numbers start with Pin 1, and continue from left to right when viewed from the front.
3. Dimensions do not include mold flash or other protrusions. Mold flash or protrusions shall not exceed .006 (.15mm) on any side.
4. Minimum metal to metal spacing at the package body for omitted pin locations is .068 in. (1.73 mm).
5. Position of terminals to be measured at a location .25 (6.35) below the package body.
6. All terminals are solder plated.

PI-2644-122004

DIP-8B

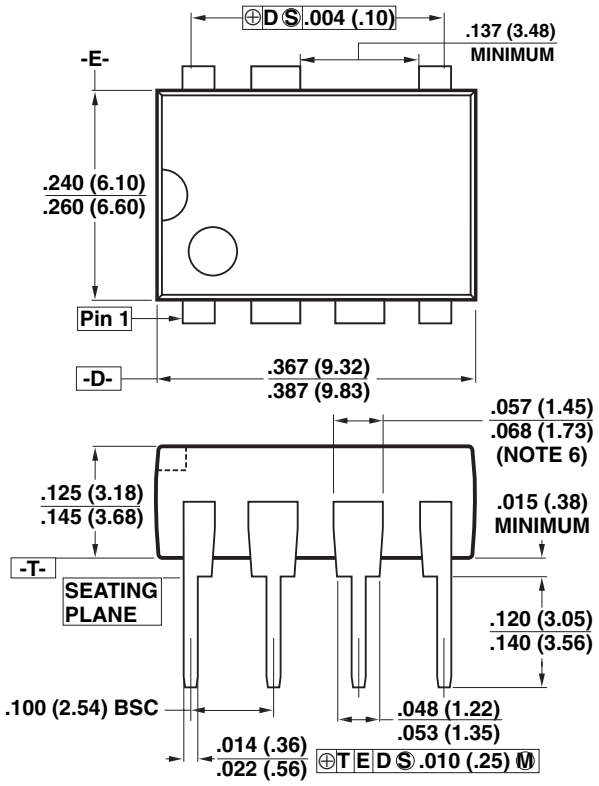

Notes:

1. Package dimensions conform to JEDEC specification MS-001-AB (Issue B 7/85) for standard dual-in-line (DIP) package with .300 inch row spacing.
2. Controlling dimensions are inches. Millimeter sizes are shown in parentheses.
3. Dimensions shown do not include mold flash or other protrusions. Mold flash or protrusions shall not exceed .006 (.15) on any side.
4. Pin locations start with Pin 1, and continue counter-clockwise to Pin 8 when viewed from the top. The notch and/or dimple are aids in locating Pin 1. Pin 6 is omitted.
5. Minimum metal to metal spacing at the package body for the omitted lead location is .137 inch (3.48 mm).
6. Lead width measured at package body.
7. Lead spacing measured with the leads constrained to be perpendicular to plane T.

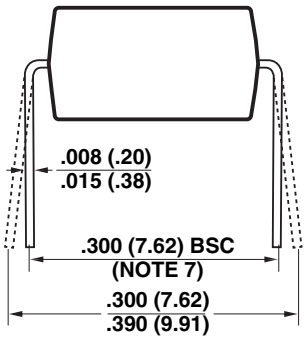

P08B

PI-2551-121504

SMD-8B

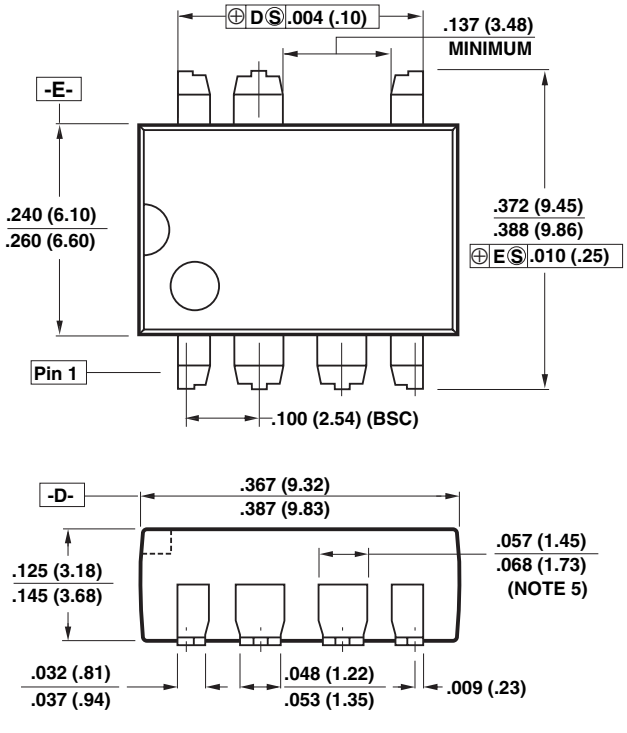

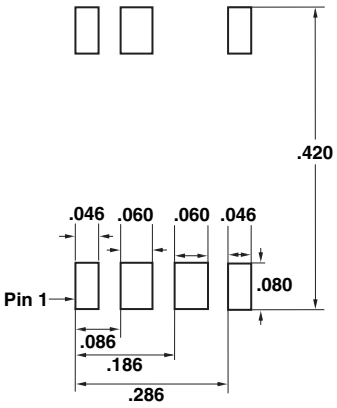

Solder Pad Dimensions

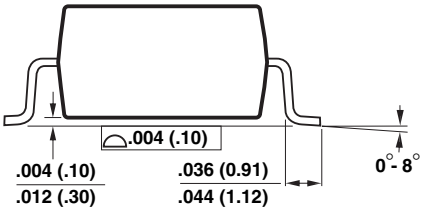

Notes:

1. Controlling dimensions are inches. Millimeter sizes are shown in parentheses.
2. Dimensions shown do not include mold flash or other protrusions. Mold flash or protrusions shall not exceed .006 (.15) on any side.
3. Pin locations start with Pin 1, and continue counter-clockwise to Pin 8 when viewed from the top. Pin 6 is omitted.
4. Minimum metal to metal spacing at the package body for the omitted lead location is .137 inch (3.48 mm).
5. Lead width measured at package body.
6. D and E are referenced datums on the package body.

G08B

PI-2546-121504

TO-263-7C

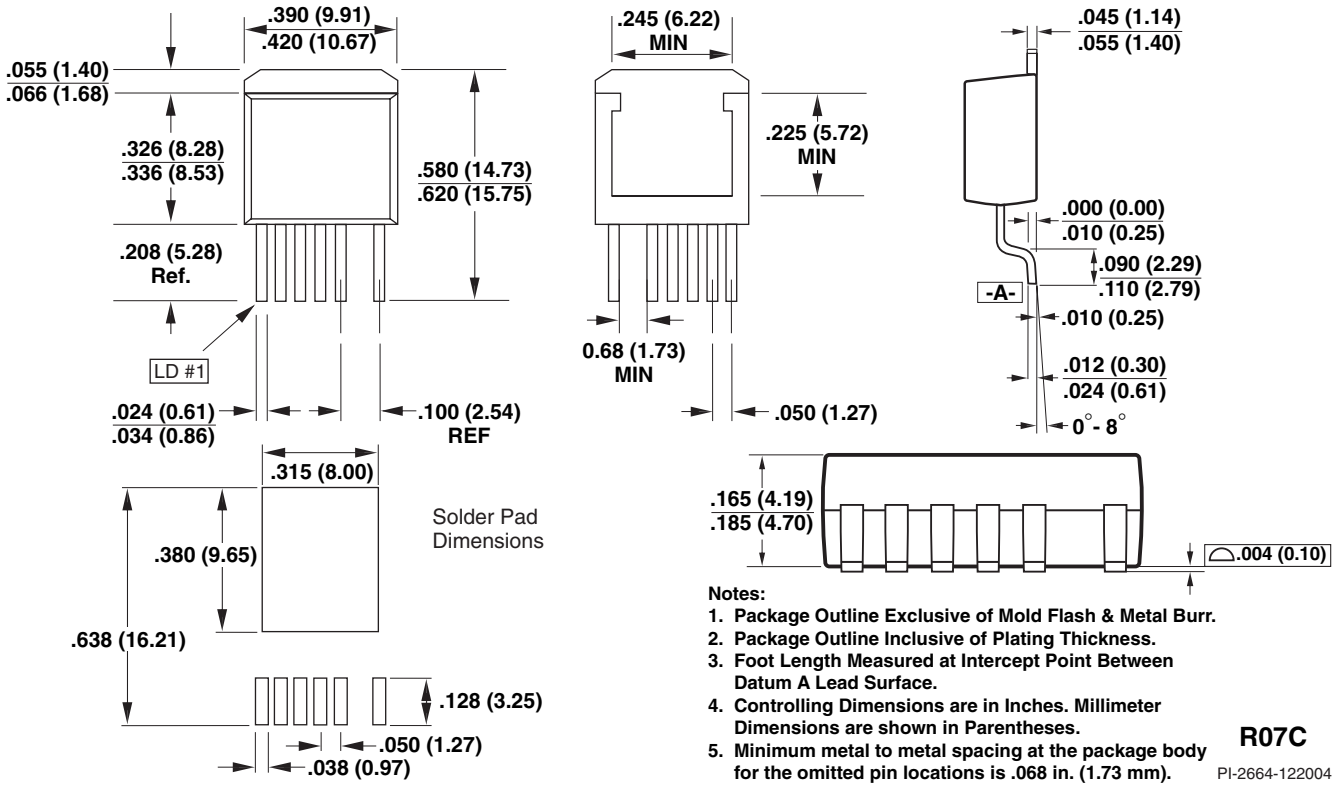

Notes:
1. Package Outline Exclusive of Mold Flash & Metal Burr.
2. Package Outline Inclusive of Plating Thickness.
3. Foot Length Measured at Intercept Point Between Datum A Lead Surface.
4. Controlling Dimensions are in Inches. Millimeter Dimensions are shown in Parentheses.
5. Minimum metal to metal spacing at the package body for the omitted pin locations is .068 in. (1.73 mm).

R07C

PI-2664-122004

TO-262-7C

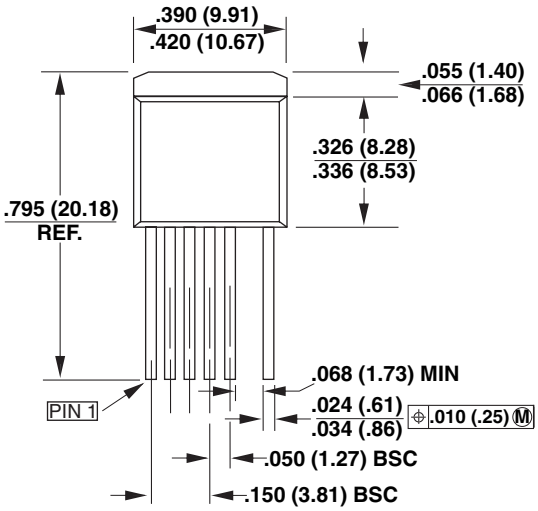

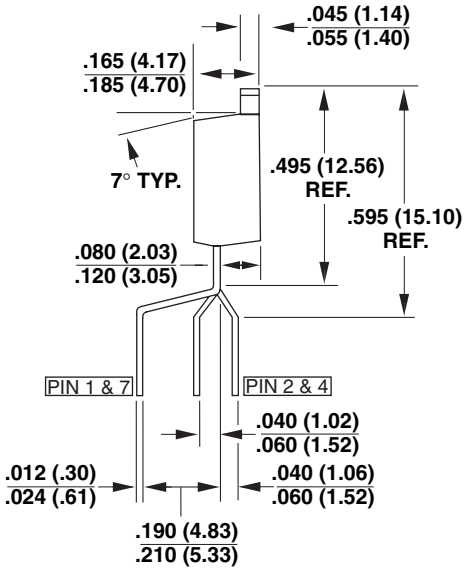

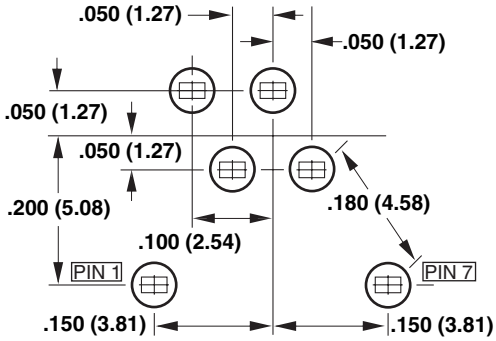

F07C MOUNTING HOLE PATTERN

Notes:

1. Controlling dimensions are inches. Millimeter dimensions are shown in parentheses.
2. Pin numbers start with Pin 1, and continue from left to right when viewed from the front.
3. Dimensions do not include mold flash or other protrusions. Mold flash or protrusions shall not exceed .006 (.15mm) on any side.
4. Minimum metal to metal spacing at the package body for omitted pin locations is .068 inch (1.73 mm).
5. Position of terminals to be measured at a location .25 (6.35) below the package body.
6. All terminals are solder plated.

PI-2757-122004

Revision	Notes	Date
D	-	11/00
E	1) Added R package (D2PAK). 2) Corrected abbreviations (s = seconds). 3) Corrected x-axis units in Figure 11 (µA). 4) Added missing external current limit resistor in Figure 25 (R_{IL}). 5) Corrected spelling. 6) Added caption for Table 4. 7) Corrected Breakdown Voltage parameter condition (T_J = 25 °C). 8) Corrected font sizes in figures. 9) Figure 40 replaced. 10) Corrected schematic component values in Figure 44.	7/01
F	1) Corrected Power Table value.	9/01
G	1) Added TOP250 device and F package (TO-262). 2) Added R package Thermal Impedance parameters and adjusted Output Power values in Table 1. 3) Adjusted Off-State Current value.	1/02
H	1) Added note to parameter table for Breakdown Voltage measurement. 2) Miscellaneous text corrections.	9/02
I	1) Updated P, Y, R and F package information. 2) Revised thermal impedances (θ_{JA}) for all package types. 3) Expanded Maximum Duty Cycle and deleted Maximum Duty Cycle Reduction Slope parameters. 4) Corrected DIP-8B and SMD-8B Package Drawings.	4/03
J	1) Added TOP245P. 2) Miscellaneous text corrections.	8/03
K	1) Corrected typographic errors in Figures 4, 6, 20, 28 and 34; and in MULTI-FUNCTION (M) Pin Operation section.	9/03
L	1) Added TOP246P.	3/04
M	1) Added lead-free ordering information.	12/04
N	1) Updated Maximum Duty Cycle conditions. 2) Minor error corrections. 3) Added Note 4 to Absolute Maximum Ratings specification.	4/05
O	1) Added TOP245G and TOP246G	11/05

For the latest updates, visit our website: *www.powerint.com*

Power Integrations reserves the right to make changes to its products at any time to improve reliability or manufacturability. Power Integrations does not assume any liability arising from the use of any device or circuit described herein. POWER INTEGRATIONS MAKES NO WARRANTY HEREIN AND SPECIFICALLY DISCLAIMS ALL WARRANTIES INCLUDING, WITHOUT LIMITATION, THE IMPLIED WARRANTIES OF MERCHANTABILITY, FITNESS FOR A PARTICULAR PURPOSE, AND NON-INFRINGEMENT OF THIRD PARTY RIGHTS.

PATENT INFORMATION

The products and applications illustrated herein (including transformer construction and circuits external to the products) may be covered by one or more U.S. and foreign patents, or potentially by pending U.S. and foreign patent applications assigned to Power Integrations. A complete list of Power Integrations' patents may be found at www.powerint.com. Power Integrations grants its customers a license under certain patent rights as set forth at http://www.powerint.com/ip.htm.

LIFE SUPPORT POLICY

POWER INTEGRATIONS' PRODUCTS ARE NOT AUTHORIZED FOR USE AS CRITICAL COMPONENTS IN LIFE SUPPORT DEVICES OR SYSTEMS WITHOUT THE EXPRESS WRITTEN APPROVAL OF THE PRESIDENT OF POWER INTEGRATIONS. As used herein:

1. A Life support device or system is one which, (i) is intended for surgical implant into the body, or (ii) supports or sustains life, and (iii) whose failure to perform, when properly used in accordance with instructions for use, can be reasonably expected to result in significant injury or death to the user.
2. A critical component is any component of a life support device or system whose failure to perform can be reasonably expected to cause the failure of the life support device or system, or to affect its safety or effectiveness.

The PI logo, ***TOPSwitch***, ***TinySwitch***, ***LinkSwitch***, ***DPA-Switch***, ***EcoSmart***, ***Clampless***, ***E-Shield***, ***Filterfuse***, ***PI Expert*** and ***PI FACTS*** are trademarks of Power Integrations, Inc. Other trademarks are property of their respective companies.
©Copyright 2005, Power Integrations, Inc.

Power Integrations Worldwide Sales Support Locations

WORLD HEADQUARTERS
5245 Hellyer Avenue
San Jose, CA 95138, USA.
Main: +1-408-414-9200
Customer Service:
Phone: +1-408-414-9665
Fax: +1-408-414-9765
e-mail: usasales@powerint.com

CHINA (SHANGHAI)
Rm 807-808A
Pacheer Commercial Centre,
555 Nanjing Rd. West
Shanghai, P.R.C. 200041
Phone: +86-21-6215-5548
Fax: +86-21-6215-2468
e-mail: chinasales@powerint.com

CHINA (SHENZHEN)
Rm 2206-2207, Block A,
Electronics Science & Technology Bldg.
2070 Shennan Zhong Rd.
Shenzhen, Guangdong,
China, 518031
Phone: +86-755-8379-3243
Fax: +86-755-8379-5828
e-mail: chinasales@powerint.com

GERMANY
Rueckertstrasse 3
D-80336, Munich
Germany
Phone: +49-89-5527-3910
Fax: +49-89-5527-3920
e-mail: eurosales@powerint.com

INDIA
261/A, Ground Floor
7th Main, 17th Cross,
Sadashivanagar
Bangalore, India 560080
Phone: +91-80-5113-8020
Fax: +91-80-5113-8023
e-mail: indiasales@powerint.com

ITALY
Via Vittorio Veneto 12
20091 Bresso MI
Italy
Phone: +39-028-928-6000
Fax: +39-028-928-6009
e-mail: eurosales@powerint.com

JAPAN
Keihin Tatemono 1st Bldg 2-12-20
Shin-Yokohama, Kohoku-ku,
Yokohama-shi, Kanagawa ken,
Japan 222-0033
Phone: +81-45-471-1021
Fax: +81-45-471-3717
e-mail: japansales@powerint.com

KOREA
RM 602, 6FL
Korea City Air Terminal B/D, 159-6
Samsung-Dong, Kangnam-Gu,
Seoul, 135-728, Korea
Phone: +82-2-2016-6610
Fax: +82-2-2016-6630
e-mail: koreasales@powerint.com

SINGAPORE
51 Newton Road
#15-08/10 Goldhill Plaza
Singapore, 308900
Phone: +65-6358-2160
Fax: +65-6358-2015
e-mail: singaporesales@powerint.com

TAIWAN
5F, No. 318, Nei Hu Rd., Sec. 1
Nei Hu Dist.
Taipei, Taiwan 114, R.O.C.
Phone: +886-2-2659-4570
Fax: +886-2-2659-4550
e-mail: taiwansales@powerint.com

EUROPE HQ
1st Floor, St. James's House
East Street, Farnham
Surrey GU9 7TJ
United Kingdom
Phone: +44 (0) 1252-730-140
Fax: +44 (0) 1252-727-689
e-mail: eurosales@powerint.com

APPLICATIONS HOTLINE
World Wide +1-408-414-9660

APPLICATIONS FAX
World Wide +1-408-414-9760