RAYSTAR

RAYSTAR Optronics, Inc.
曜凌光電股份有限公司

曜凌光電股份有限公司
Raystar Optronics, Inc.
42881台中市大雅區科雅路25號5樓
5F, No. 25, Keya Road, Daya Dist., Taichung City 42881, Taiwan
T：+886-4-2565-0761 | F：+886-4-2565-0760
sales@raystar-optronics.com | www.raystar-optronics.com

RFF70DG-AIW-DNG

SPECIFICATION

CUSTOMER:

APPROVED BY	
PCB VERSION	
DATE	

FOR CUSTOMER USE ONLY

SALES BY	APPROVED BY	CHECKED BY	PREPARED BY

Release DATE:

TFT Display Inspection Specification: https://www.raystar-optronics.com/download/products.htm
Precaution in use of TFT module: https://www.raystar-optronics.com/download/declaration.htm

Revision History

VERSION	DATE	REVISED PAGE NO.	Note
0	2021/04/07		First issue
A	2021/04/15		Modify Touch Panel Information
B	2021/12/16		Correct LED voltage

RAYSTAR OPTRONICS

Contents

1.Module Classification Information

2.Summary

3.General Specifications

4.Interface

5.Contour Drawing

6.Block Diagram

7.Absolute Maximum Ratings

8.Electrical Characteristics

9.DC Characteristics

10.AC Characteristics

11.Optical Characteristics

12.Reliability

13.Touch Panel Information

14.Other

RAYSTAR OPTRONICS

1.Module Classification Information

R	F	F	70	DG	-	A	I	W	-	D	N	G
1	2	3	4	5	-	6	7	8	-	9	10	11

Item	Description	
1	R：Raystar Optronics Inc.	
2	Display Type：F→TFT Type, J→ Custom TFT	
3	Solution: A: 128x160 B:320x234 C:320x240 D:480x234 E:480x272 F:800x480 G:640x480 H:1024x600 I:320x480 J:240x320 K:1280x800 L:240x400 M:1024x768 N:128x128 O:480x800 P:640x320 Q:800x600 S:480x128 T:800x320	
4	Display Size：7.0” TFT	
5	Version Code.	
6	Model Type: A：TFT LCD E：TFT+FR+CONTROL BOARD J：TFT+FR+A/D BOARD N：TFT+FR+A/D BOARD+CONTROL BOARD S：TFT+FR+POWER BOARD (DC TO DC) 1：TFT+CONTROL BOARD	6：TFT+FR H：TFT+D/V BOARD I：TFT+FR+D/V BOARD B：TFT+POWER BD
7	Polarizer Type, Temperature range, View direction	I→Transmissive, W. T, 6:00 ; C→Transmissive, N. T, 6:00 L→Transmissive, W.T,12:00 ; F→Transmissive, N.T,12:00 Y→Transmissive,W.T, IPS TFT ; A→Transmissive, N.T, IPS TFT Z→Transmissive, W.T, O-TFT R→Transmissive, Super W.T, O-TFT N→Transmissive, Super W.T, 6:00; Q→Transmissive, Super W.T, 12:00 V→Transmissive, Super W.T, VA TFT
8	Backlight	W：LED, White / H：LED, High Light White F：CCFL, White
9	Driver Method	D: Digital A: Analog L：LVDS M:MIPI
10	Interface	N：without control board A：8Bit B：16Bit S:SPI Interface R: RS232 U:USB I: I2C
11	TS	N：Without TS S：resistive touch panel C：capacitive touch panel capacitive touch panel (G-F-F) G：capacitive touch panel(G-G)

RAYSTAR OPTRONICS

2.Summary

TFT 7.0”is a TN transmissive type color active matrix TFT liquid crystal display that use amorphous silicon TFT as switching devices. This module is a composed of a TFT_LCD module, It is usually designed for industrial application and this module follows RoHs.

RAYSTAR OPTRONICS

3.General Specifications

- Size: 7.0 inch
- Dot Matrix: 800 x RGBx480(TFT) dots
- Module dimension: 165.0(W) x 100(H) x 7.40(D) mm
- Active area: 154.08 x 85.92 mm
- Dot pitch: 0.0642 x 0.1790 mm
- LCD type: TFT, Normally White, Transmissive
- View Direction: 12 o’clock
- Gray Scale Inversion Direction: 6 o’clock
- TFT IC: HX8264,HX8664 or Equivalent
- TFT Interface: 24-bit RGB
- Aspect Ratio: 16:9
- CTP FW Version: 0x07.0x00.0x00.0x00.0x65.0x90.0x00.0x01
- CTP IC: ILI2130 or Equivalent
- CTP Interface: I2C
- CTP Resolution:16384*16384
- Backlight Type: LED, Normally White
- With /Without TP: With CTP
- Surface: Glare

*Color tone slight changed by temperature and driving voltage.

RAYSTAR OPTRONICS

4.Interface

4.1. LCM PIN Definition

Pin	Symbol	Function	Remark
1	A	Power supply for backlight	
2	A	Power supply for backlight	
3	K	Backlight ground	
4	K	Backlight ground	
5	GND	Power ground	
6	VCOM	Common voltage	
7	VCC	Power for Digital Circuit	
8	MODE	DE/SYNC mode select	Note 1
9	DE	Data Input Enable	
10	VS	Vertical Sync Input	
11	HS	Horizontal Sync Input	
12	B7	Blue data(MSB)	
13	B6	Blue data	
14	B5	Blue data	
15	B4	Blue data	
16	B3	Blue data	
17	B2	Blue data	
18	B1	Blue data	Note 2
19	B0	Blue data(LSB)	Note 2
20	G7	Green data(MSB)	
21	G6	Green data	
22	G5	Green data	
23	G4	Green data	
24	G3	Green data	
25	G2	Green data	
26	G1	Green data	Note 2
27	G0	Green data(LSB)	Note 2
28	R7	Red data(MSB)	
29	R6	Red data	
30	R5	Red data	
31	R4	Red data	
32	R3	Red data	
33	R2	Red data	
34	R1	Red data	Note 2
35	R0	Red data(LSB)	Note 2
36	GND	Power Ground	
37	DCLK	Sample clock	Note 3
38	GND	Power Ground	
39	L/R	Left / right selection	Note 4,5
40	U/D	Up/down selection	Note 4,5
41	VGH	Gate ON Voltage	
42	VGL	Gate OFF Voltage	
43	AVDD	Power for Analog Circuit	

RAYSTAR OPTRONICS

44	RESET	Global reset pin.	Note 6
45	NC	No connection	
46	VCOM	Common Voltage	
47	DITHB	Dithering function	Note 7
48	GND	Power Ground	
49	NC	No connection	
50	NC	No connection	

I: input, O: output, P: Power
Note 1: DE/SYNC mode select. Normally pull high.
When select DE mode, MODE=”1”, VS and HS must pull high.
When select SYNC mode, MODE= ”0”, DE must be grounded.
Note 2: When input 18 bits RGB data, the two low bits of R,G and B data must be grounded.
Note 3: Data shall be latched at the falling edge of DCLK.
Note 4: Selection of scanning mode

Setting of scan control		Scanning direction
U/D	L/R	
GND	VCC	Up to down, left to right
VCC	GND	Down to up, right to left
GND	GND	Up to down, right to left
VCC	VCC	Down to up, left to right

Note 5: Definition of scanning direction.
Refer to the figure as below:

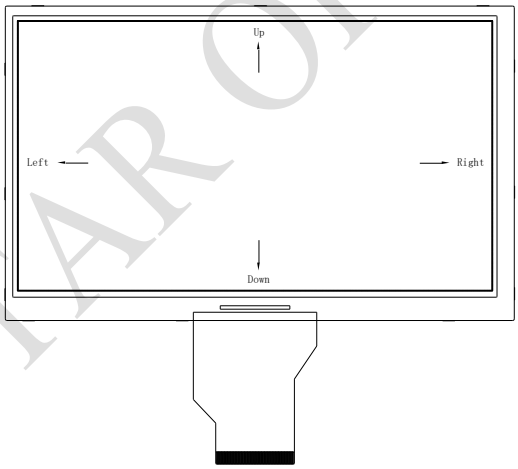

Note 6: Global reset pin. Active low to enter reset state . Suggest to connect with an RC reset circuit for stability. Normally pull high.
Note 7: Dithering function enable control, normally pull high.
When DITHB=”1”, Disable internal dithering function,
When DITHB=”0”, Enable internal dithering function,

RAYSTAR OPTRONICS

4.2. CTP PIN Definition

Pin	Symbol	Function	Remark
1	VSS	Ground for analog circuit	
2	VDDT	Power Supply : +3.3V	
3	SCL	I2C clock input	
4	NC	No connect	
5	SDA	I2C data input and output	
6	NC	No connect	
7	/RST	External Reset, Low is active	
8	NC	No connect	
9	/INT	External interrupt to the host	
10	VSS	Ground for analog circuit	

RAYSTAR OPTRONICS

5.Contour Drawing

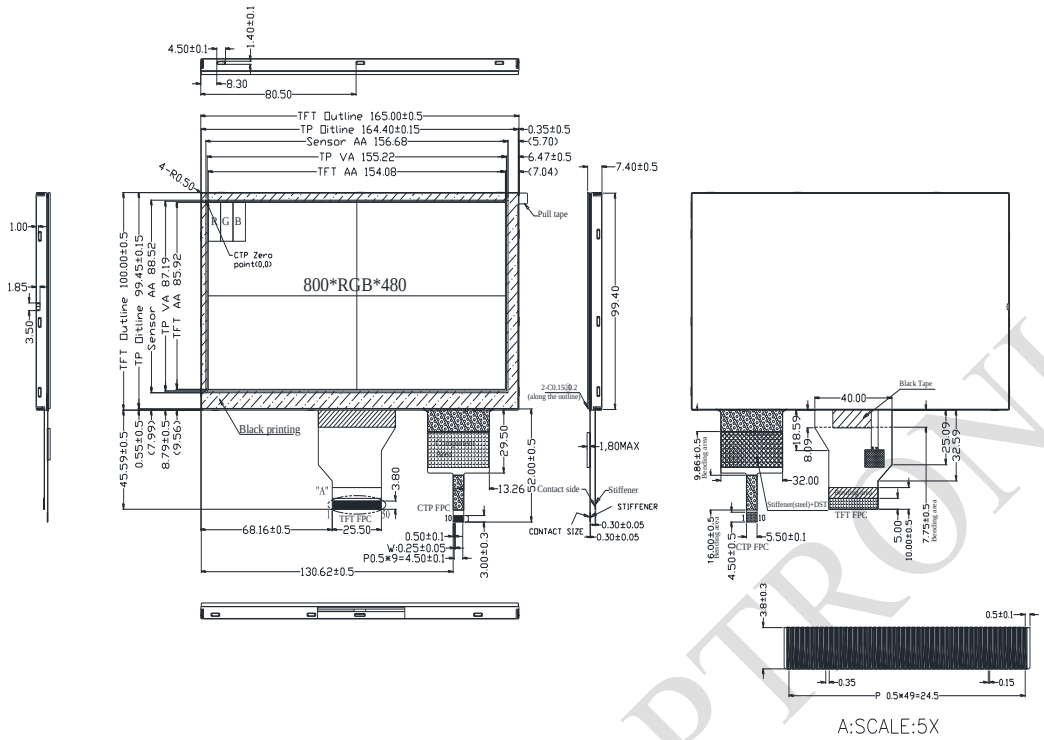

CTP FPC

PIN NO	SYMBOL
1	VSS
2	VDDT
3	SCL
4	NC
5	SDA
6	NC
7	/RST
8	NC
9	/INT
10	VSS

TFT FPC

PIN	
1	A
2	A
3	K
4	K
5	GND
6	VCOM
7	VCC
8	MODE
9	DE
10	VS
11	HS
12	B7
13	B6
14	B5
15	B4
16	B3
17	B2
18	B1
19	B0
20	G7
21	G6
22	G5
23	G4
24	G3
25	G2
26	G1
27	G0
28	R7
29	R6
30	R5
31	R4
32	R3
33	R2
34	R1
35	R0
36	GND
37	DCLK
38	GND
39	L/R
40	U/D
41	VGH
42	VGL
43	AVDD
44	RESET
45	NC
46	VCOM
47	DITHB
48	GND
49	NC
50	NC

The non-specified tolerance of dimension is ±0.3mm.

RAYSTAR OPTRONICS

6.Block Diagram

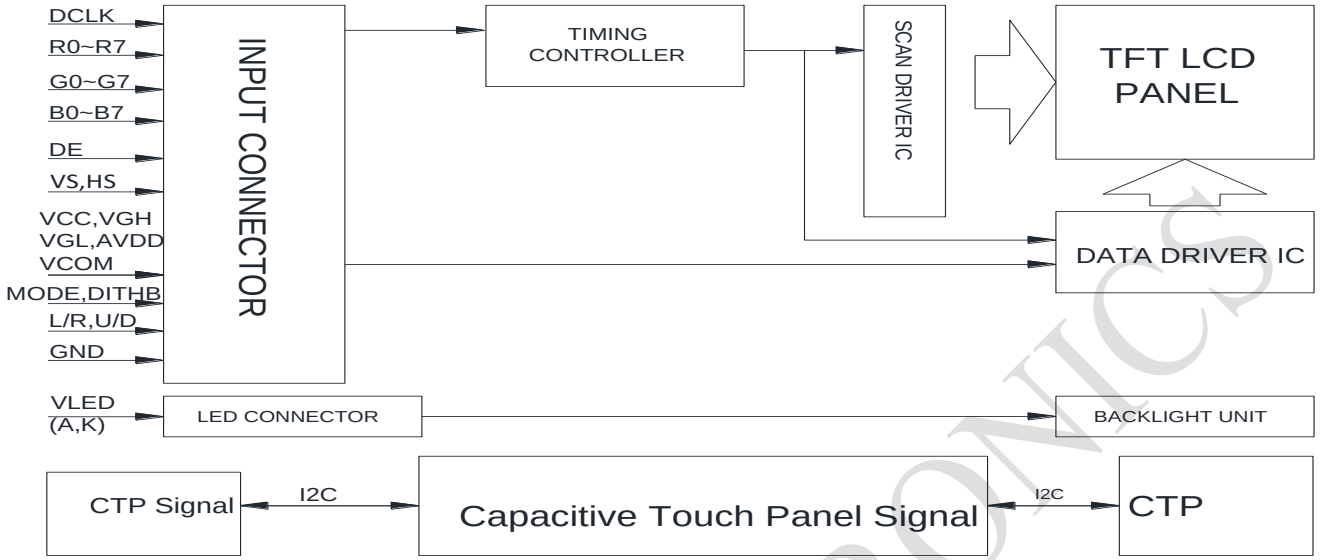

RAYSTAR OPTRONICS

7.Absolute Maximum Ratings

Item	Symbol	Min	Typ	Max	Unit
Operating Temperature	TOP	-20	—	+70	□
Storage Temperature	TST	-30	—	+80	□

Note: Device is subject to be damaged permanently if stresses beyond those absolute maximum ratings listed above

1. Temp. □60□, 90% RH MAX. Temp.＞60□, Absolute humidity shall be less than 90% RH at 60□

RAYSTAR OPTRONICS

8.Electrical Characteristics

8.1. Operating conditions:

Item	Symbol	Min	Typ	Max	Unit	Remark
Supply Voltage For Logic	VCC	3.0	3.3	3.6	V	Note 2
Supply CTP	VDDT	2.8	—	3.3	V	
	I_{CTP}	—	65	98	mA	
Power Supply For Current	VDD=3.3V		4	10	mA	
Power Consumption	VDD=3.3V		13.2	36	mW	
Power voltage	AVDD	10.2	10.4	10.6	V	
Power voltage	VGH	15.3	16.0	16.7	V	
Power voltage	VGL	-7.7	-7.0	-6.3	V	
Input signal voltage	VCOM	2.6	(3.6)	4.6	V	Note 4

Note 1: Be sure to apply VCC and VGL to the LCD first, and then apply VGH.
Note 2: VCC setting should match the signals output voltage (refer to Note 3) of customer's system board.
Note 3: DCLK,HS,VS,RESET,U/D, L/R,DE,R0~R7,G0~G7,B0~B7,MODE,DITHB.
Note 4: Typical VCOM is only a reference value. It must be optimized according to each LCM. Please use VR and base on below application circuit.

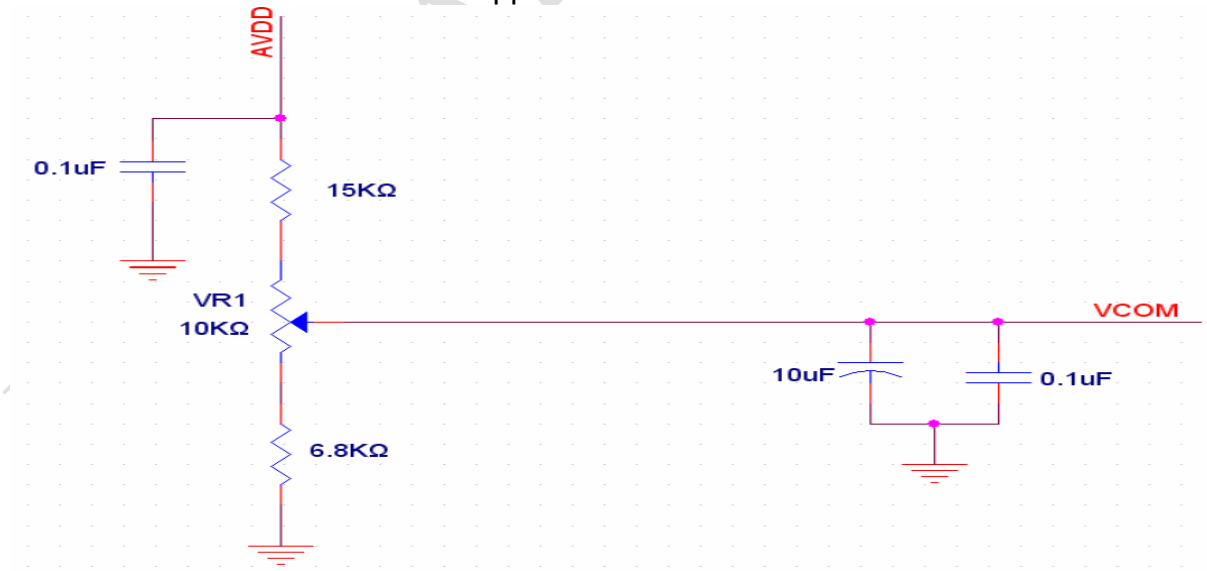

RAYSTAR OPTRONICS

8.2. LED driving conditions

Parameter	Symbol	Min.	Typ.	Max.	Unit	Remark
LED current	-	-	180	-	mA	-
Power Consumption	-	1512	-	1980	mW	-
LED voltage	A~K	8.4	9.8	11.0	V	Note 1
LED Life Time	-	-	50,000	-	Hr	Note 2,3,4

Note 1 : There are 1 Groups LED

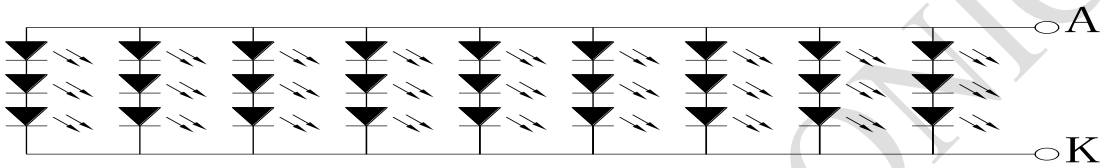

Backlight LED Circuit

Note 2 : Ta = 25 ℃
Note 3 : Brightness to be decreased to 50% of the initial value
Note 4 : The single LED lamp case

RAYSTAR OPTRONICS

9.DC Characteristics

Parameter	Symbol	Rating			Unit	Condition
		Min	Typ	Max		
Low level input voltage	V_{IL}	0	-	0.2VCC	V	
High level input voltage	V_{IH}	0.8VCC	-	VCC	V	

RAYSTAR OPTRONICS

10.AC Characteristics

10.1. AC Electrical Characteristics

Signal	Symbol	Min	Typ	Max	Unit
HS setup time	Thst	8	-	-	ns
HS hold time	Thhd	8	-	-	ns
VS setup time	Tvst	8	-	-	ns
VS hold time	Tvhd	8	-	-	ns
Data setup time	Tdsu	8	-	-	ns
Data hole time	Tdhd	8	-	-	ns
DE setup time	Tesu	8	-	-	ns
DE hole time	Tehd	8	-	-	ns
VCC Power On Slew rate	TPOR	-	-	20	ms
RESET pulse width	TRst	1	-	-	ms
DCLK cycle time	Tcoh	20	-	-	ns
DCLK pulse duty	Tcwh	40	50	60	%

10.2. Input Clock and Data Timing Diagram

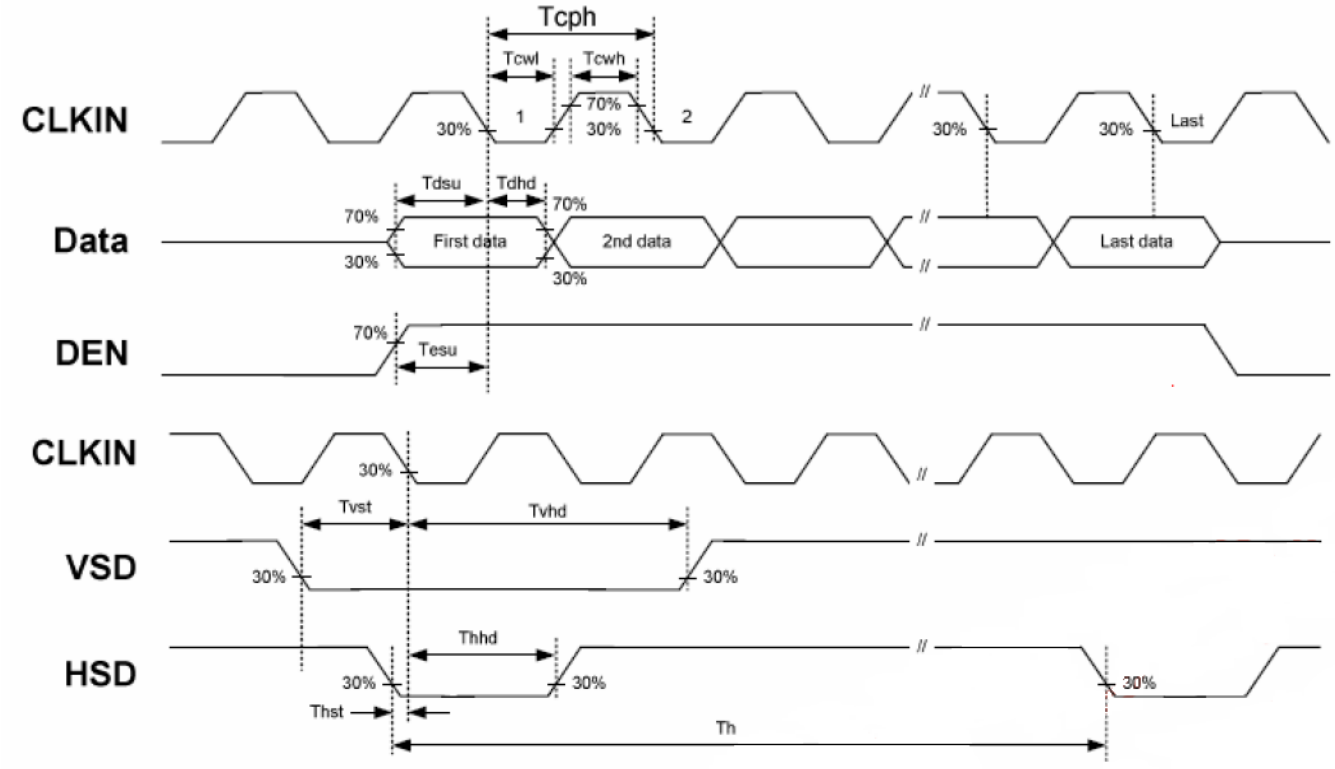

10.3. Timing

Item	Symbol	Values			Unit	Remark
		Min.	Typ.	Max.		
Horizontal Display Area	thd	-	800	-	DCLK	
DCLK Frequency	fclk	26.4	33.3	46.8	MHz	
One Horizontal Line	th	862	1056	1200	DCLK	
HS pulse width	thpw	1	-	40	DCLK	
HS Blanking	thb	46	46	46	DCLK	
HS Front Porch	thfp	16	210	354	DCLK	

Item	Symbol	Values			Unit	Remark
		Min.	Typ.	Max.		
Vertical Display Area	tvd	-	480	-	TH	
VS period time	tv	510	525	650	TH	
VS pulse width	tvpw	1	-	20	TH	
VS Blanking	tvb	23	23	23	TH	
VS Front Porch	tvfp	7	22	147	TH	

10.4. Data Input Format

Fig. Horizontal input timing diagram

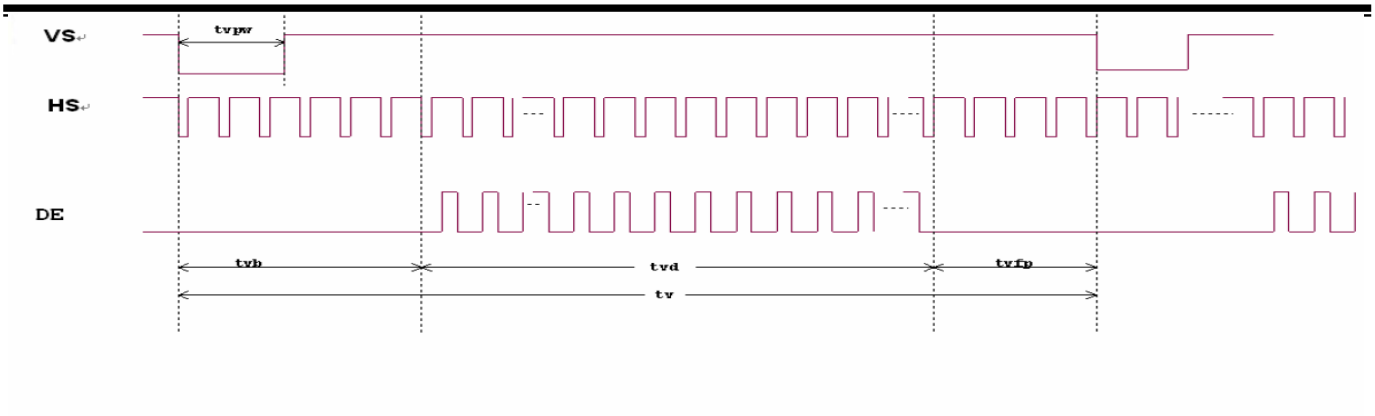

Fig. Vertical input timing diagram

RAYSTAR OPTRONIC

11.Optical Characteristics

Item		Symbol	Condition.	Min	Typ.	Max.	Unit	Remark
Response time		Tr	θ=0°、Φ=0°	-	10	20	.ms	Note 3
		Tf		-	15	30	.ms	
Contrast ratio		CR	At optimized viewing angle	400	500	-	-	Note 4
Color Chromaticity	White	Wx	θ=0°、Φ=0	0.26	0.30	0.32	-	Note 2,5,6
		Wy		0.27	0.28	0.33	-	
Viewing angle (Gray Scale Inversion Direction)	Hor.	ΘR	CR≧10	60	70	-	Deg.	Note 1
		ΘL		60	70	-		
	Ver.	ΦT		40	50	-		
		ΦB		60	70	-		
Brightness		-	-	250	350	-	cd/m^2	Center of display
Uniformity		(U)	-	70	-	-	%	Note 5

Ta=25±2℃, IL=180mA

Note 1: Definition of viewing angle range

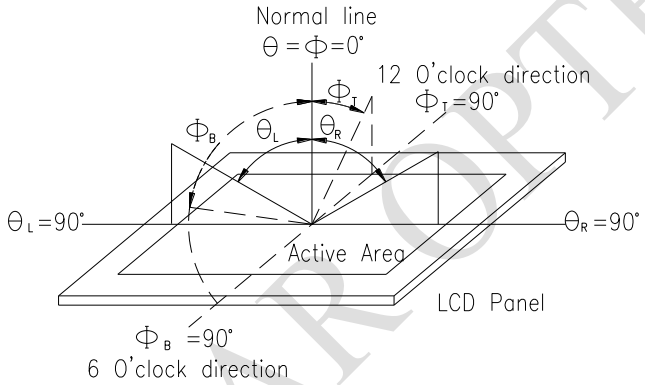

Fig. 11.1. Definition of viewing angle

Note 2: Test equipment setup:

After stabilizing and leaving the panel alone at a driven temperature for 10 minutes, the measurement should be executed. Measurement should be executed in a stable, windless, and dark room. Optical specifications are measured by Topcon BM-7orBM-5 luminance meter 1.0° field of view at a distance of 50cm and normal direction.

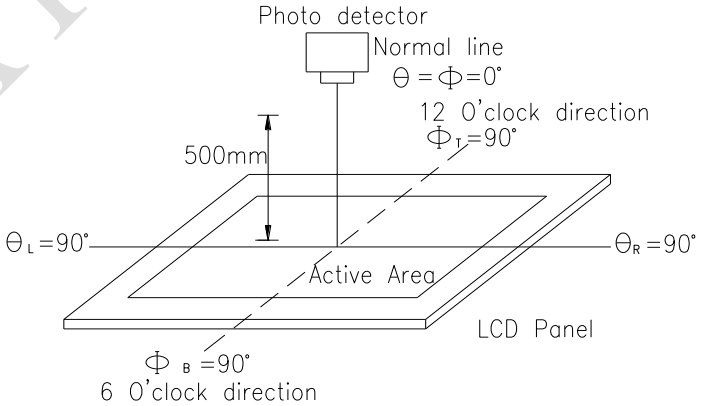

Fig. 11.2. Optical measurement system setup

RAYSTAR OPTRONICS

Note 3: Definition of Response time:
The response time is defined as the LCD optical switching time interval between “White” state and “Black” state. Rise time, Tr, is the time between photo detector output intensity changed from 90%to 10%. And fall time, Tf, is the time between photo detector output intensity changed from 10%to 90%

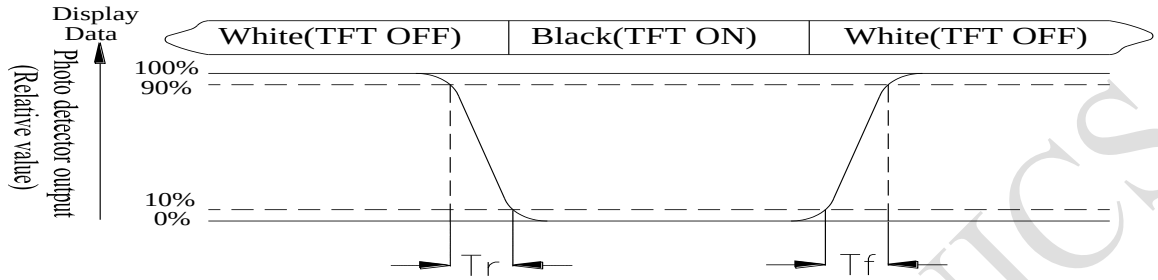

Note 4: Definition of contrast ratio:
The contrast ratio is defined as the following expression.

$$\text{Contrast ratio (CR)} = \frac{\text{Luminance measured when LCD on the "White" state}}{\text{Luminance measured when LCD on the "Black" state}}$$

Note 5: Definition of Luminance Uniformity
Active area is divided into 9 measuring areas (reference the picture in below). Every measuring point is placed at the center of each measuring area.
Luminance Uniformity (U) = Lmin/Lmax x100%
L = Active area length
W = Active area width

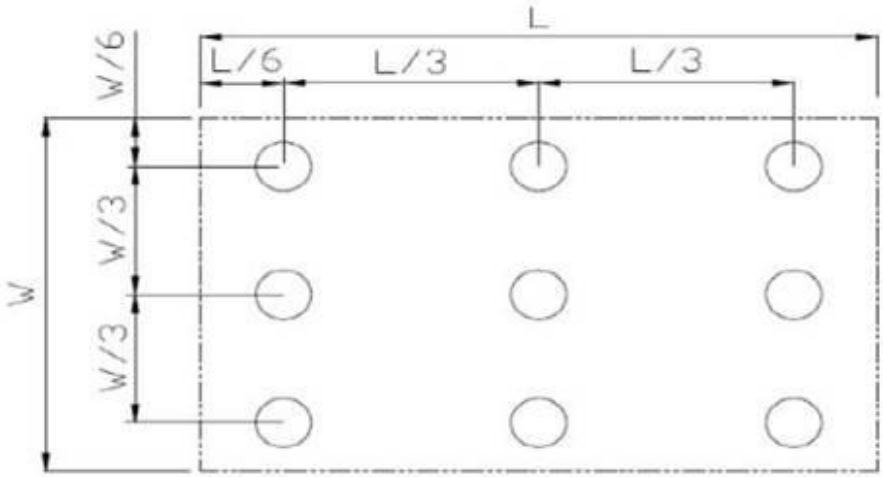

Fig11.3. Definition of uniformity

Note 6: Definition of color chromaticity (CIE 1931)
Color coordinates measured at the center point of LCD

Note 7: Measured at the center area of the panel when all the input terminals of LCD panel are electrically opened.

12.Reliability

Content of Reliability Test (Wide temperature, -20□~70□)

Environmental Test			
Test Item	**Content of Test**	**Test Condition**	**Note**
High Temperature storage	Endurance test applying the high storage temperature for a long time.	80□ 200hrs	2
Low Temperature storage	Endurance test applying the low storage temperature for a long time.	-30□ 200hrs	1,2
High Temperature Operation	Endurance test applying the electric stress (Voltage & Current) and the thermal stress to the element for a long time.	70□ 200hrs	——
Low Temperature Operation	Endurance test applying the electric stress under low temperature for a long time.	-20□ 200hrs	1
High Temperature/ Humidity Operation	The module should be allowed to stand at 60□,90%RH max	60□,90%RH 96hrs	1,2
Thermal shock resistance	The sample should be allowed stand the following 10 cycles of operation -20□ 25□ 70□ 30min 5min 30min 1 cycle	-20□/70□ 10 cycles	——
Vibration test	Endurance test applying the vibration during transportation and using.	Total fixed amplitude : 1.5mm Vibration Frequency : 10~55Hz One cycle 60 seconds to 3 directions of X,Y,Z for Each 15 minutes	3
Static electricity test	Endurance test applying the electric stress to the terminal.	VS=±600V(contact) ,±800v(air), RS=330Ω CS=150pF 10 times	——

Note1: No dew condensation to be observed.

Note2: The function test shall be conducted after 4 hours storage at the normal Temperature and humidity after remove from the test chamber.

Note3: The packing have to including into the vibration testing.

RAYSTAR OPTRONICS

13.Touch Panel Information

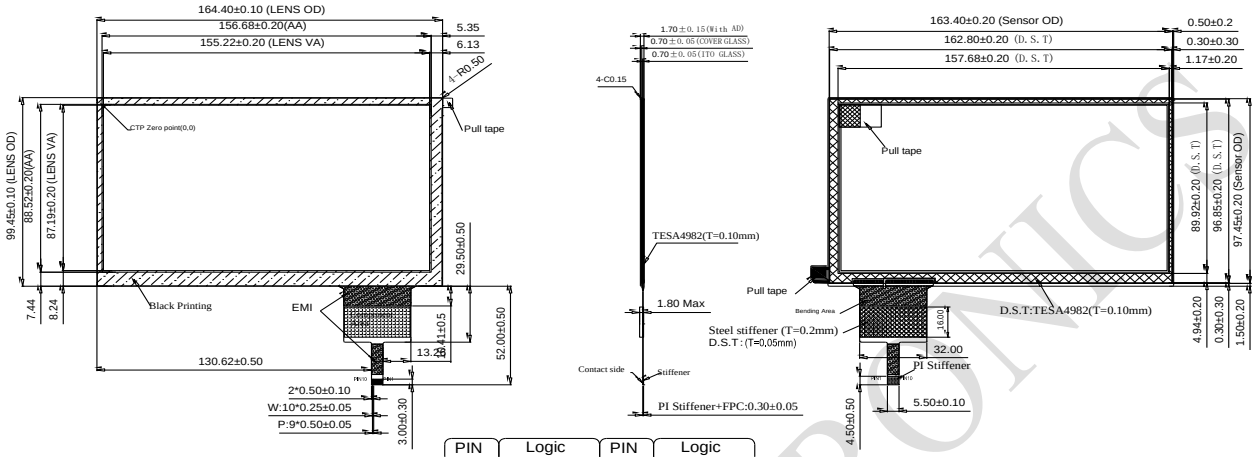

PIN	Logic	PIN	Logic
1	VSS	6	NC
2	VDDT	7	/RST
3	SCL	8	NC
4	NC	9	/INT
5	SDA	10	VSS

RAYSTAR OPTRONICS

13.1. I2C AC Characteristics

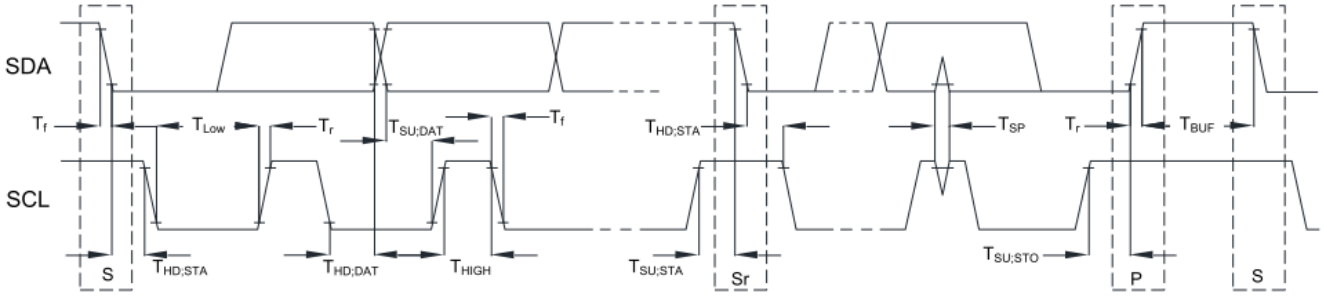

Item	Symbol	100kHz		400kHz		Unit
		Min.	Max.	Min.	Max.	
SCL standard mode clock frequency	FSCL	0	100	0	400	kHz
Hold time (repeated) START condition. After this period, the first clock is generated.	THD;STA	4	--	0.6	--	us
LOW period of the SCL clock	TLOW	4.7	--	1.3	--	us
HIGH period of the SCL clock	THIGH	4	--	0.6	--	us
Setup time for a repeat START condition.	TSU;STA	4.7	--	0.6	--	us
Data hold time	THD;DAT	0	3.45	0	0.9	us
Data setup time	TSU;DAT	250	--	100	--	ns
Rising time of both SDA and SCL signals	Tr	--	1000	--	300	ns
Falling time of both SDA and SCL signals	Tf	--	300	--	300	ns
Setup time for STOP condition.	TSU;STO	4	--	0.6	--	us
Free time between STOP and START condition	TBUF	4.7	--	1.3	--	us
Pulse width of spikes which must be suppressed by input filter	TSP	--	--	0	50	ns

13.2. Power On Sequence

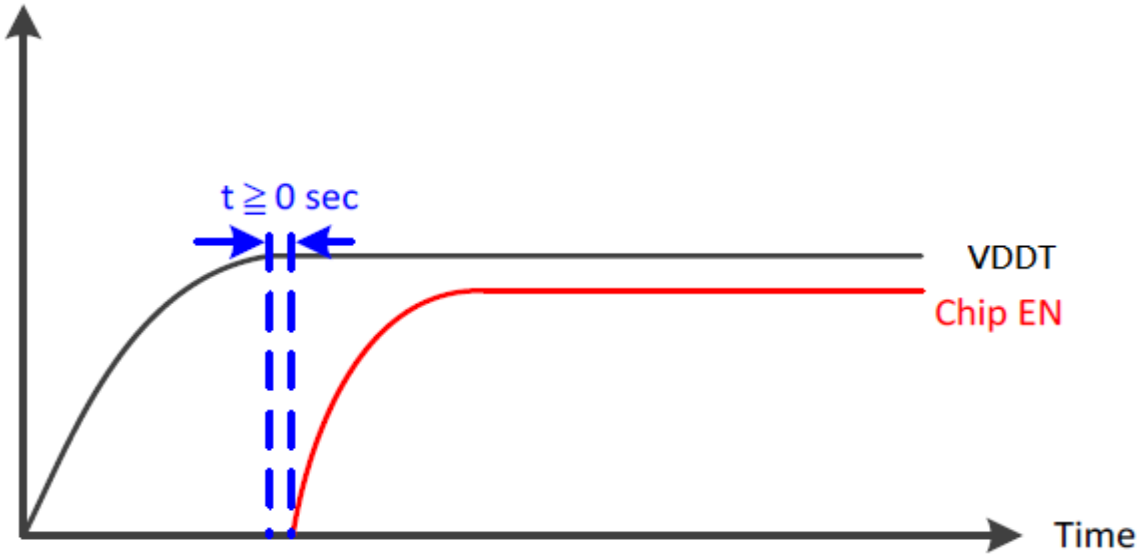

13.3. Power Off to Power On Sequence

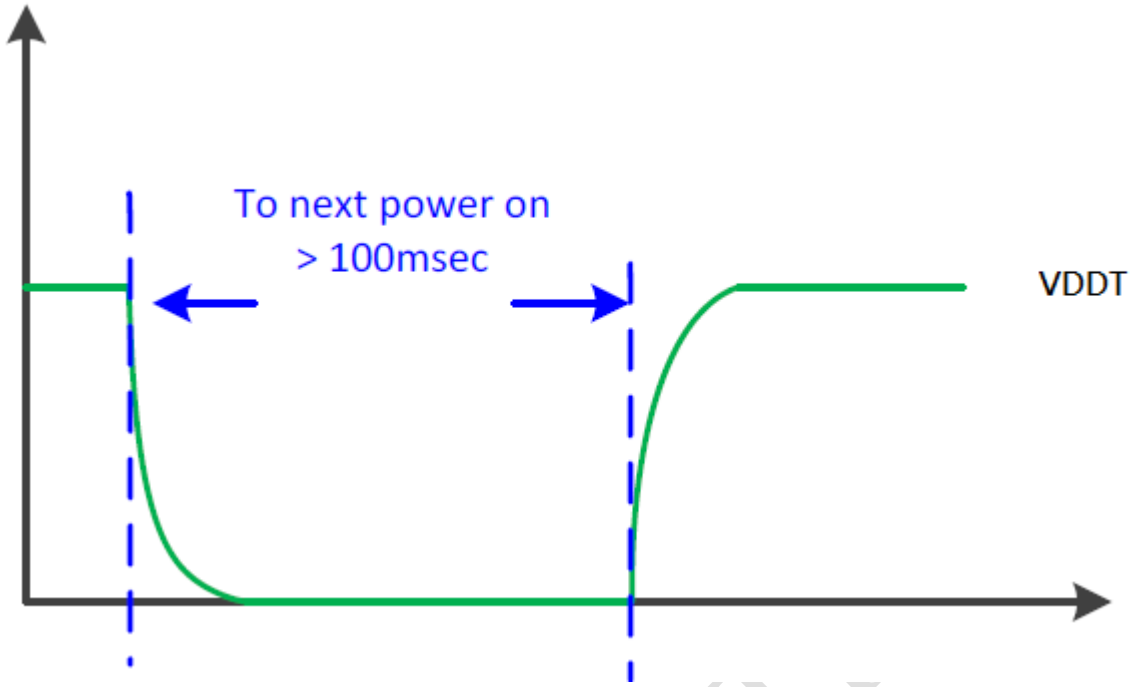

RAYSTAR OPTICS

LCM Sample Estimate Feedback Sheet		
Module Number：_____		
1、Panel Specification：		
1. Panel Type：	□ Pass	□ NG ,_____
2. View Direction：	□ Pass	□ NG ,_____
3. Numbers of Dots：	□ Pass	□ NG ,_____
4. View Area：	□ Pass	□ NG ,_____
5. Active Area：	□ Pass	□ NG ,_____
6.Operating Temperature：	□ Pass	□ NG ,_____
7.Storage Temperature：	□ Pass	□ NG ,_____
8.Others：_____		
2、Mechanical Specification：		
1. PCB Size：	□ Pass	□ NG ,_____
2.Frame Size：	□ Pass	□ NG ,_____
3.Materal of Frame：	□ Pass	□ NG ,_____
4.Connector Position：	□ Pass	□ NG ,_____
5.Fix Hole Position：	□ Pass	□ NG ,_____
6.Backlight Position：	□ Pass	□ NG ,_____
7. Thickness of PCB：	□ Pass	□ NG ,_____
8. Height of Frame to PCB：	□ Pass	□ NG ,_____
9.Height of Module：	□ Pass	□ NG ,_____
10.Others：	□ Pass	□ NG ,_____
3、Relative Hole Size：		
1.Pitch of Connector：	□ Pass	□ NG ,_____
2.Hole size of Connector：	□ Pass	□ NG ,_____
3.Mounting Hole size：	□ Pass	□ NG ,_____
4.Mounting Hole Type：	□ Pass	□ NG ,_____
5.Others：	□ Pass	□ NG ,_____
4、Backlight Specification：		
1.B/L Type：	□ Pass	□ NG ,_____
2.B/L Color：	□ Pass	□ NG ,_____
3.B/L Driving Voltage (Reference for LED Type)：□ Pass □ NG ,_____		
4.B/L Driving Current：	□ Pass	□ NG ,_____
5.Brightness of B/L：	□ Pass	□ NG ,_____
6.B/L Solder Method：	□ Pass	□ NG ,_____
7.Others：	□ Pass	□ NG ,_____

>> **Go to page 2** <<

RAYSTAR OPTRONICS

Module Number：_____

5、Electronic Characteristics of Module：

1.Input Voltage：	□ Pass	□ NG ,_____
2.Supply Current：	□ Pass	□ NG ,_____
3.Driving Voltage for LCD：	□ Pass	□ NG ,_____
4.Contrast for LCD：	□ Pass	□ NG ,_____
5.B/L Driving Method：	□ Pass	□ NG ,_____
6.Negative Voltage Output：	□ Pass	□ NG ,_____
7.Interface Function：	□ Pass	□ NG ,_____
8.LCD Uniformity：	□ Pass	□ NG ,_____
9.ESD test：	□ Pass	□ NG ,_____
10.Others：	□ Pass	□ NG ,_____

6、Summary：

Sales signature：_____

Customer Signature：_____ **Date**： / /

RAYSTAR OPTRONICS