Features/Benefits

- *Multi-pole and multi-position*
- *Wide variety of actuator and termination options*
- *Epoxy terminal-seal compatible with bottom wash cleaning*
- *RoHS compliant*

Typical Applications

- *Telecommunications*
- *Instrumentation*
- *Medical equipment*

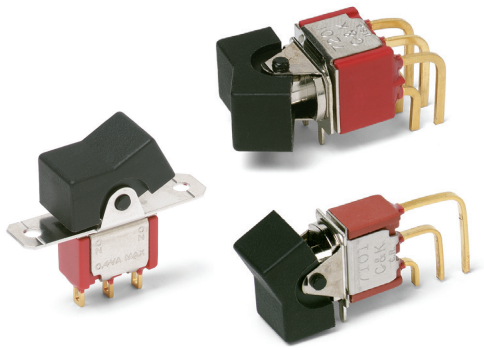

Specifications

CONTACT RATING: B contact material: 0.4 VA max. @ 20 V AC or DC max. Q contact material: 5 AMPS @ 120 V AC or 28 V DC; 2 AMPS @ 250 V AC. See page G-20 for additional ratings.

ELECTRICAL LIFE: 7X01 and UX1 models: 100,000 make-and-break cycles at full load. All other models: 40,000 cycles.

CONTACT RESISTANCE: Below 10 m Ω typ. initial @ 2-4 V DC, 100 mA, for both silver and gold plated contacts.

INSULATION RESISTANCE: 10^9 Ω min.

DIELECTRIC STRENGTH: 1000 Vrms min. @ sea level.

OPERATING TEMPERATURE: –30ºC to 85ºC.

SOLDERABILITY: Per MIL-STD-202F method 208D, or EIA RS-186E method 9 (1 hour steam aging).

NOTE: Any models supplied with S, P, R, Q, B or G contact material are RoHS compliant.

NOTE: Specifications and materials listed above are for switches with standard options. For information on specific and custom switches, consult Customer Service Center.

Materials

CASE: Glass filled nylon 6/6, flame retardant, heat stabilized, or diallyl phthalate (DAP) (UL 94V-0).

ACTUATOR: Nylon, black.

FRAME (FRONT MOUNT): Nylon, black.

FRAME (REAR MOUNT): Spring steel, black.

BUSHING: Brass or zinc, nickel plated.

HOUSING: Stainless steel.

SWITCH SUPPORT: Brass or steel, matte-tin plated.

END CONTACTS: B contact material: Copper alloy, with gold plate over nickel plate. Q contact material: Coin silver, silver plated. See page G-20 for additional contact materials.

CENTER CONTACTS & ALL TERMINALS: B contact material: Copper alloy, with gold plate over nickel plate. Q contact material: Copper alloy, silver plated. See page G-20 for additional contact materials.

TERMINAL SEAL: Epoxy. Refer to Soldering and Cleaning in Technical Data Section

HARDWARE: Mounting nuts & screws: Brass. Lockwasher: Stainless steel. Standoff: Nylon standard.

Build-A-Switch

To order, simply select desired option from each category and place in the appropriate box. Available options are shown and described on pages G-4 through G-24 . For additional options not shown in catalog, consult Customer Service Center. All models have epoxy terminal seal and are compatible with all “bottom-wash” PCB cleaning methods.

Switch Function

- **7101** SP On-None-On
- **7103** SP On-Off-On
- **7105** SP Mom.-Off-Mom.
- **7107** SP On-Off-Mom.
- **7108** SP On-None-Mom.
- **7109** SP None-On-Mom.
- **7201** DP On-None-On
- **7203** DP On-Off-On
- **7205** DP Mom.-Off-Mom.
- **7207** DP On-Off-Mom.
- **7208** DP On-None-Mom.
- **7211** DP On-On-On
- **7213** DP On-On-Mom.
- **7215** DP Mom.-On-Mom.
- **7301** 3P On-None-On
- **7303** 3P On-Off-On
- **7401** 4P On-None-On
- **7405** 4P Mom.-Off-Mom.
- **7411** 4P On-On-On

Note: UL models available, see pages G-5 and G-6.

Actuator

- **J1** .531 long rocker
- **J2** Lever
- **J3** .906” long rocker
- **J10** 1.318” long rocker
- **J11** Rocker with frame
- **J15** Rocker, snap-in
- **J16** Rocker with frame, snap-in
- **J19** Rocker with frame
- **J21** Lever with frame
- **J25** Lever, snap-in
- **J26** Lever with frame, snap-in
- **J37** Rocker with frame
- **J50** Rocker
- **J51** Rocker with frame
- **J52** Rocker with frame for LED, snap-in
- **J60** Lever
- **J61** Lever with frame, snap-in
- **J62** Lever with frame for LED, snap-in
- **J90** Lever
- **J91** Lever with frame, snap-in

Terminations

- **A** Right angle, PC thru-hole
- **AV2** Vertical right angle, PC thru-hole
- **C** PC Thru-hole
- **Z** Solder lug
- **A3** Right angle, snap-in, PC thru-hole
- **AV3** Vertical right angle, snap-in, PC thru-hole
- **AW3** Right angle, extended, PC thru-hole
- **V2** .555” high, V-bracket
- **V3** .460” high, V-bracket
- **V4** .630” high, V-bracket
- **V5** Vertical right angle, PC thru-hole
- **V6** .460” high, V-bracket
- **V7** .630” high, V-bracket
- **V8** .953” high, V-bracket
- **V9** 1.150” high, V-bracket
- **V31** .460” high, V-bracket, snap-in
- **V51** Vertical right angle, snap-in
- **V61** .460” high, V-bracket, snap-in
- **W** .750” long, wire wrap
- **W3** .425” long, wire wrap
- **W5** 1.305” long,wire wrap
- **Z3** Quick connect

Contact Material

- **B** Gold
- **P** Gold, matte tin
- **Q** Silver
- **S** Silver, matte-tin
- **G** Gold over silver
- **R** Gold over silver, matte-tin

Seal

- **E** Epoxy
- **I** Epoxy potted base

Actuator Color

- **2** Black
- **1** White
- **3** Red

Frame Color

- **2** Black
- **NONE** No frame color required
- **1** White

Metal Frame Color
(J11, J19, J21 & J37 Actuators)

- **2** Black
- **1** White

Dimensions are shown: Inches (mm)
Specifications and dimensions subject to change

sales@prom-elec.com / ООО ПРОМЭЛЕКТРОНИКА

SWITCH FUNCTION

NO. POLES	MODEL NO.	UL** MODEL NO.	SWITCH FUNCTION POS. 1	SWITCH FUNCTION POS. 2	SWITCH FUNCTION POS. 3	CONNECTED TERMINALS POS. 1	CONNECTED TERMINALS POS. 2	CONNECTED TERMINALS POS. 3	SCHEMATIC
			C&K marking on opposite side			C&K marking on opposite side			
SP	7101	U11	ON	NONE	ON	2-3	N/A	2-1	SPDT
	7103	U13	ON	OFF	ON		OPEN		
	7105	U15	MOM.	OFF	MOM.				
	7107	U17	ON	OFF	MOM.				
	7108	U18	ON	NONE	MOM.		N/A		
	7109	U19	NONE	ON	MOM.	N/A	2-3	2-1	
DP	7201	U21	ON	NONE	ON	2-3,5-6	N/A	2-1,5-4	DPDT
	7203	U23	ON	OFF	ON		OPEN		
	7205	U25	MOM.	OFF	MOM.				
	7207	U27	ON	OFF	MOM.				
	7208	U28	ON	NONE	MOM.		N/A		
	7211*	U211*	ON	ON	ON		2-3,5-4		
	7213*	U213*	ON	ON	MOM.				
	7215*	U215*	MOM.	ON	MOM.				

SPDT

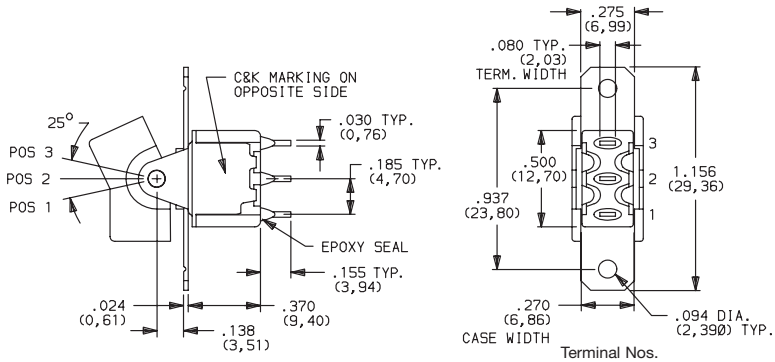

Part number shown: 7101J1ZQE2

DPDT

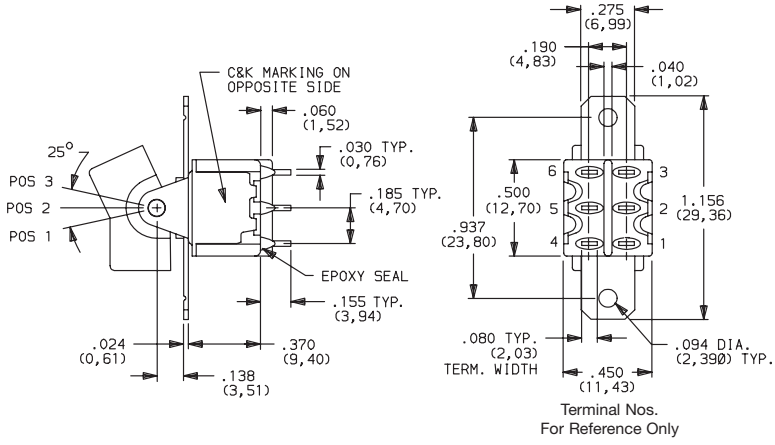

Part number shown: 7201J1ZQE2

MOM. = Momentary

** U11 through U413 model nos. c UL us with all options when ordered with G, Q, R or S contact material.

* Wiring for 3-way switch, see Section N.

Third Angle Projection

Dimensions are shown: Inches (mm)
Specifications and dimensions subject to change

SWITCH FUNCTION

NO. POLES	MODEL NO.	UL** MODEL NO.	SWITCH FUNCTION POS. 1	SWITCH FUNCTION POS. 2	SWITCH FUNCTION POS. 3	CONNECTED TERMINALS POS. 1	CONNECTED TERMINALS POS. 2	CONNECTED TERMINALS POS. 3	SCHEMATIC
			C&K marking on opposite side			C&K marking on opposite side			
3P	7301	U31	ON	NONE	ON	2-3,5-6,8-9	N/A	2-1,5-4,8-7	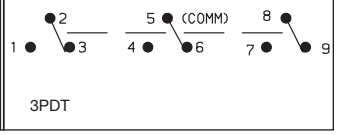
	7303	U33	ON	OFF	ON		OPEN		3PDT

3PDT

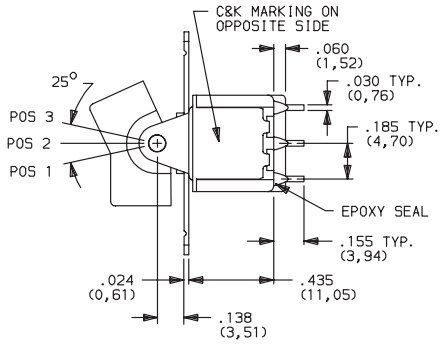

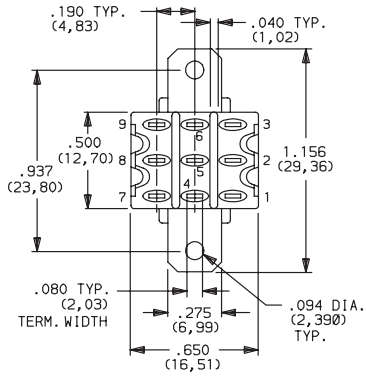

Terminal Nos.
For Reference Only

Part number shown: 7301J1ZQE2

4P	7401	U41	ON	NONE	ON	2-3,5-6,8-9,11-12	N/A	2-1,5-4,8-7,11-10	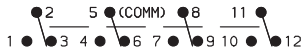
	7405	U45	MOM.	OFF	MOM.		OPEN		4PDT
	7411*	U411*	ON	ON	ON		2-3,5-4,8-9,11-10		

4PDT

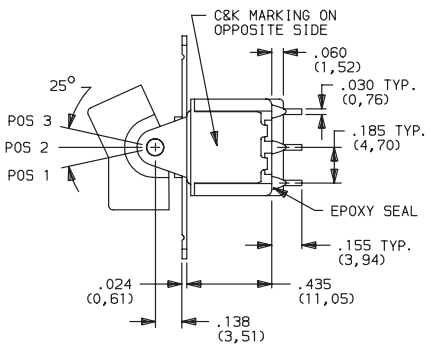

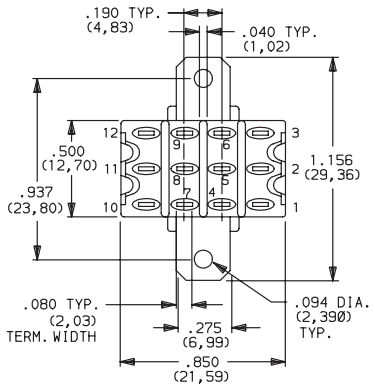

Terminal Nos.
For Reference Only

Part number shown: 7401J1ZQE2

MOM. = Momentary

** U11 through U411 model nos. c UL us with all options when ordered with G, Q, R or S contact material.

* Wiring for 3-way switch: See Technical Data section of this catalog for RoHS compliant and compatible definitions and specifications.

Third Angle Projection

Dimensions are shown: Inches (mm)
Specifications and dimensions subject to change

ACTUATOR–PANEL REAR MOUNT

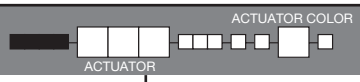

J1 ROCKER

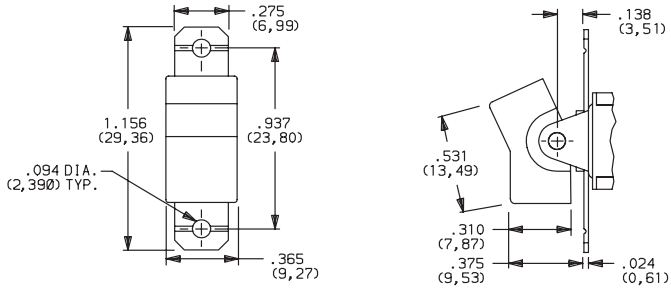

J2 LEVER

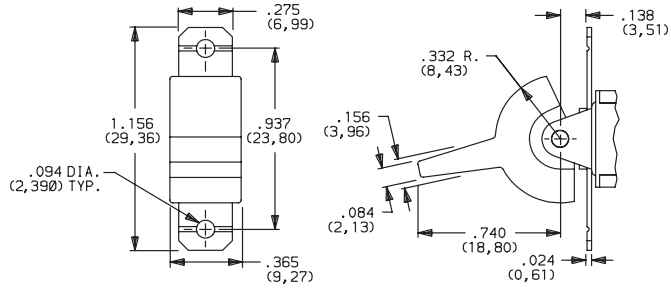

J3 ROCKER

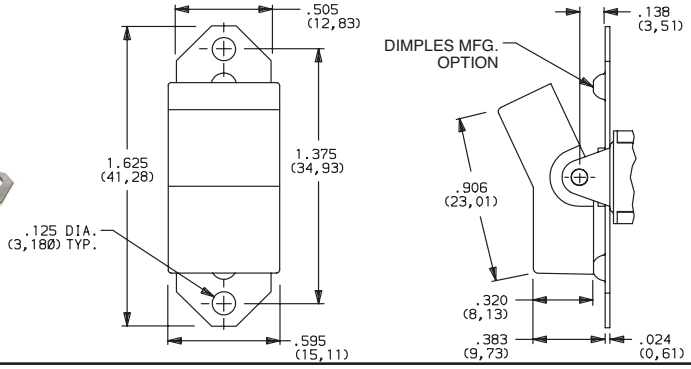

J10 ROCKER

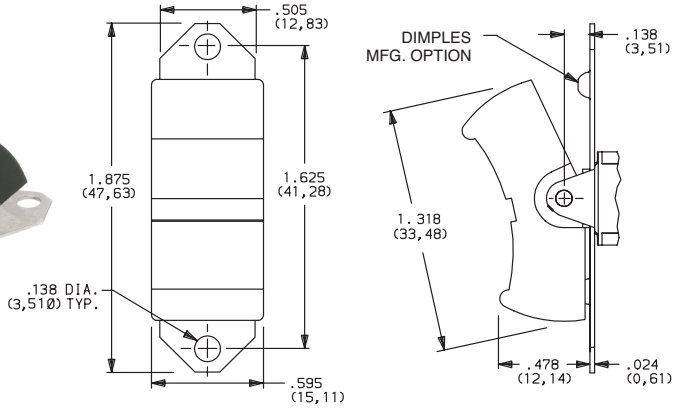

OPTION CODE	ACTUATOR COLOR
2	BLACK
1	WHITE
3	RED

Finish: Matte. Other colors, custom actuator markings and legends available, consult Customer Service Center.

NOTE: Hardware: two each—mounting screws, nuts, lockwashers and standoffs for 1/8 inch thick panel are supplied standard on all switches with panel mounting brackets. Actuators available separately, see page G-21 through G-22. Hardware is available see Technical Data section of this catalog.

J1, J2, J3 & J10 Actuators available with C, W-W5, Z or Z3 terminations.

PANEL MOUNTING

J1 & J2 Actuators

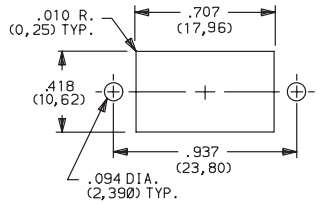

J3 Actuator

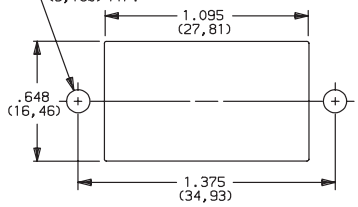

J10 Actuator

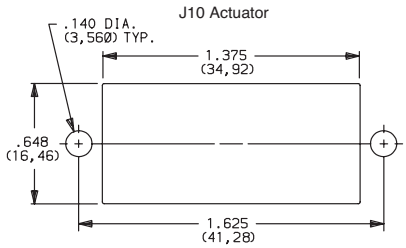

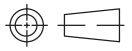
Third Angle Projection

Dimensions are shown: Inches (mm)
Specifications and dimensions subject to change

ACTUATOR–SNAP-IN FRONT MOUNT

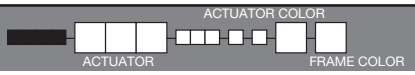

OPTION CODE	ACTUATOR COLOR
2	BLACK
1	WHITE
3	RED

OPTION CODE	FRAME COLOR
2	BLACK
NONE	No Frame Color (J15 or J25options)
1	WHITE

Finish: Matte. Other colors, custom actuator markings and legends available, consult Customer Service Center.

NOTE: Actuators & frames available separately, see pages G-21 through G-22. J15, J16, J25, J26, J50 & J51 Actuators available with 71XX, 72XX, U1XX & U2XX models and C, W-W5, Z and Z3 terminations.

PANEL MOUNTING

J15, J16, J25 & J26 Actuators

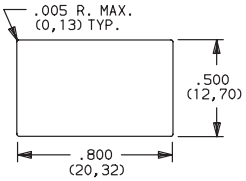

J50 Actuator

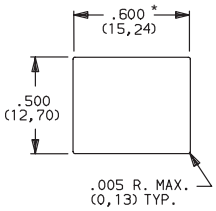

* For J50: Increase this dimension to .620/.625 (15,75/15,88) for .091/.125 (2,31/3,18) thk. panels.

J15 ROCKER, SNAP-IN

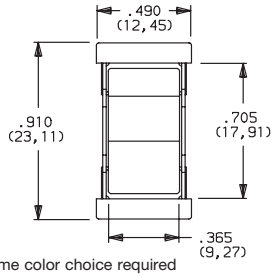

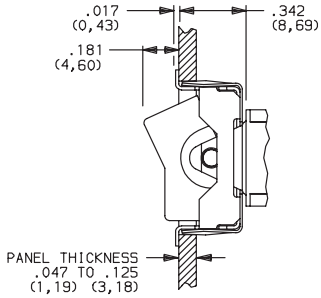

No frame color choice required

J16 ROCKER WITH FRAME, SNAP-IN

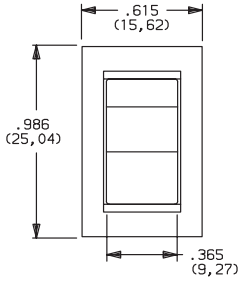

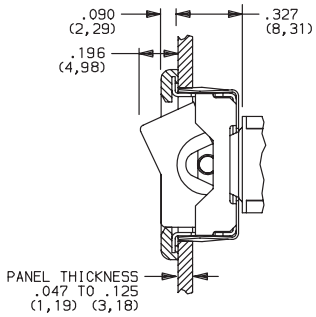

J25 LEVER, SNAP-IN

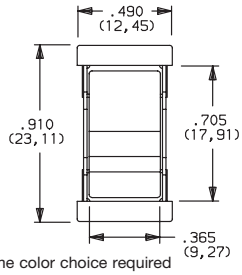

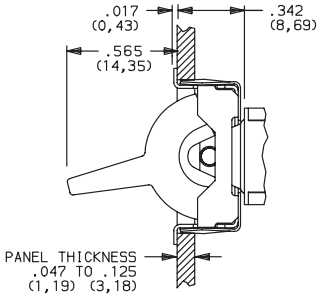

No frame color choice required

J26 LEVER WITH FRAME, SNAP-IN

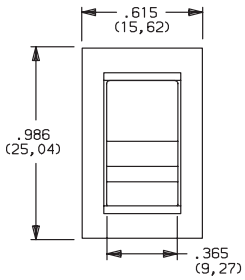

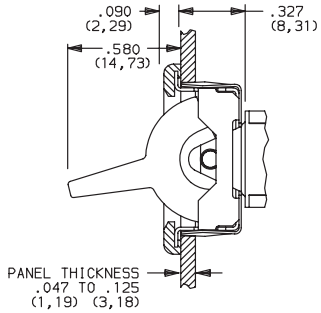

J50 ROCKER, SNAP-IN

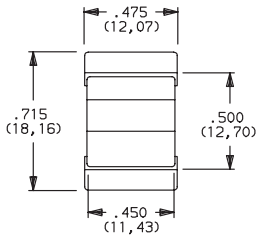

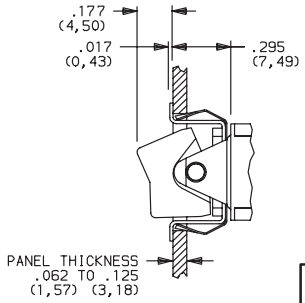

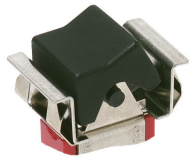

No frame color choice required

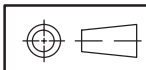
Third Angle Projection

Dimensions are shown: Inches (mm)
Specifications and dimensions subject to change

ACTUATOR–SNAP-IN FRONT MOUNT

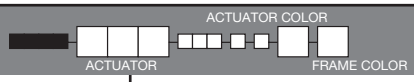

J51 ROCKER WITH FRAME, SNAP-IN

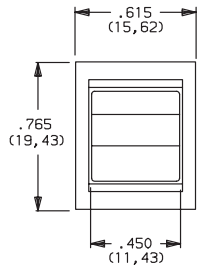

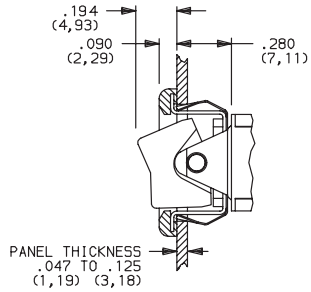

OPTION CODE	ACTUATOR COLOR
2	BLACK
1	WHITE
3	RED

J52 ROCKER WITH FRAME FOR LED, SNAP-IN

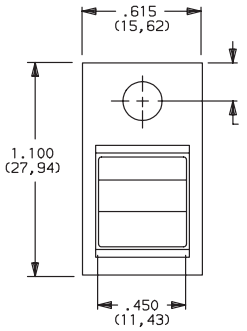

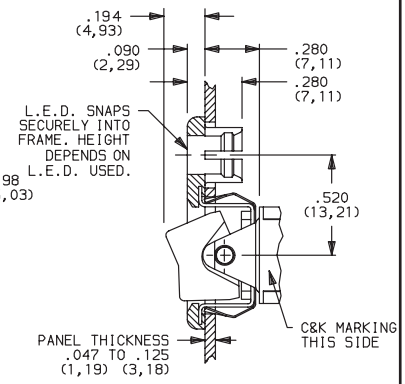

LED not included.
For LED information, see page G-24.

OPTION CODE	FRAME COLOR
2	BLACK
NONE	No Frame Color (J15 or J25 options)
1	WHITE

Finish: Matte. Other colors, custom actuator markings and legends available, consult Customer Service Center.

NOTE: Actuators & frames available separately, see pages G-21 through G-22. J51, J52, J60 & J61 Actuators available with 71XX, 72XX, U1XX & U2XX models and C, W-W5, Z and Z3 terminations.

J60 LEVER, SNAP-IN

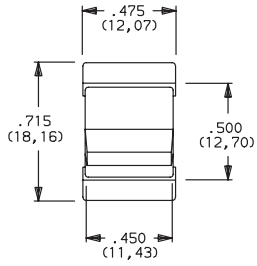

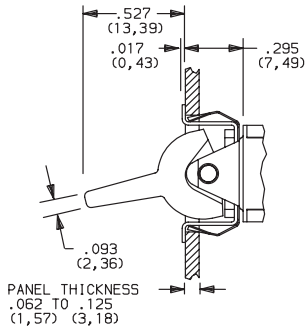

No frame color choice required

PANEL MOUNTING

J51, J60 & J61 Actuators

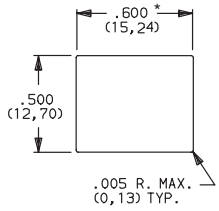

J52 Actuator

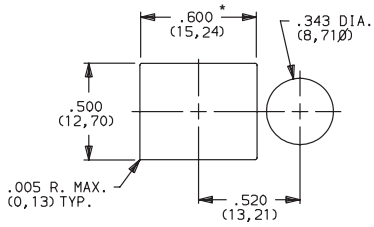

For J51, J52: Increase this dimension to .620/.625 (15,75/15,88) for .060/.125(1,52/3,18) thk. panels.

J61 LEVER WITH FRAME, SNAP-IN

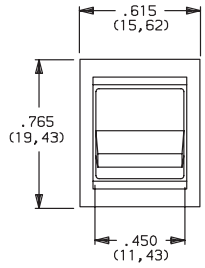

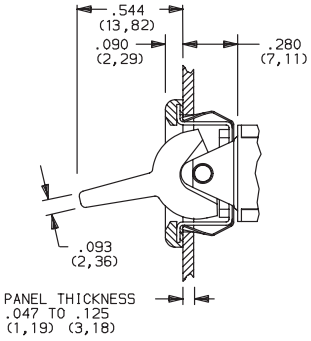

Third Angle Projection

Dimensions are shown: Inches (mm)
Specifications and dimensions subject to change

ACTUATOR–SNAP-IN FRONT MOUNT

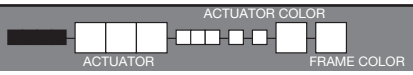

OPTION CODE	ACTUATOR COLOR
2	BLACK
1	WHITE
3	RED

OPTION CODE	FRAME COLOR
2	BLACK
NONE	No Frame Color (J90 options)
1	WHITE

Finish: Matte. Other colors, custom actuator markings and legends available, consult Customer Service Center.

NOTE: Actuators & frames available separately, see pages G-21 through G-22. J62, J90 & J91 Actuators available with 71XX, 72XX, U1XX & U2XX models and C, W-W5, Z & Z3 terminations.

J62 LEVER WITH FRAME FOR LED, SNAP-IN

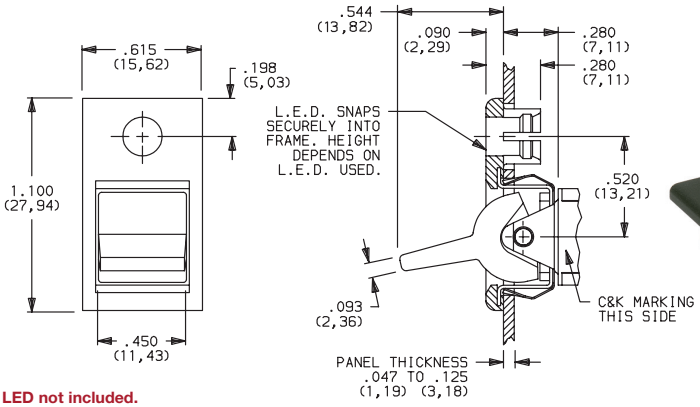

LED not included.
For LED information, see page H-25.

J90 LEVER, SNAP-IN

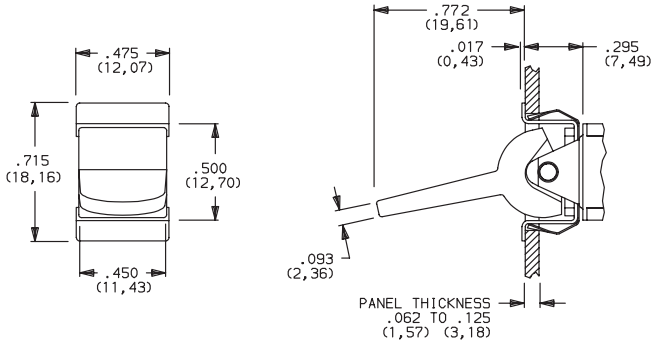

No frame color choice required.

J91 LEVER WITH FRAME, SNAP-IN

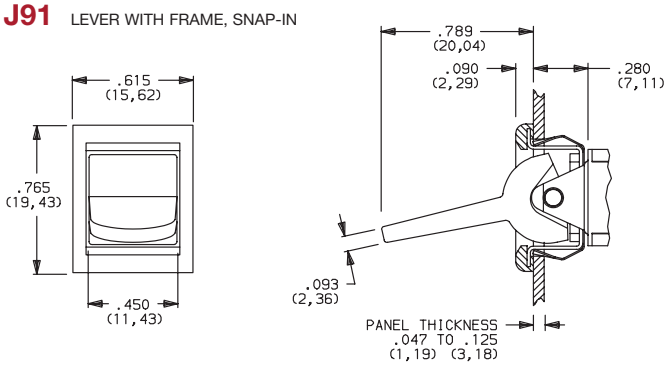

PANEL MOUNTING

J62 Actuator

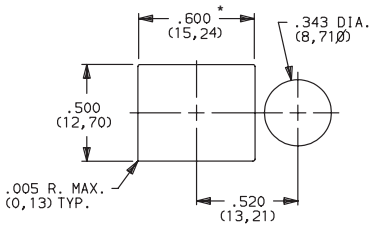

J90, J91 & J93 Actuators

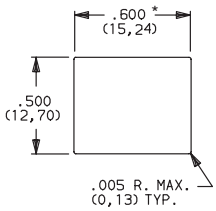

* For J90: Increase this dimension to .620/.625 (15,75/15,88) for .091/.125 (2,31/3,18) thk. panels. For J91: Increase this dimension to .620/.625 (15,75/15,88) for .060/.125 (1,52/3,18) thk. panels.

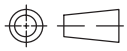
Third Angle Projection

Dimensions are shown: Inches (mm)
Specifications and dimensions subject to change

ACTUATOR–REAR MOUNT

ACTUATOR FRAME COLOR

J11 ROCKER WITH FRAME

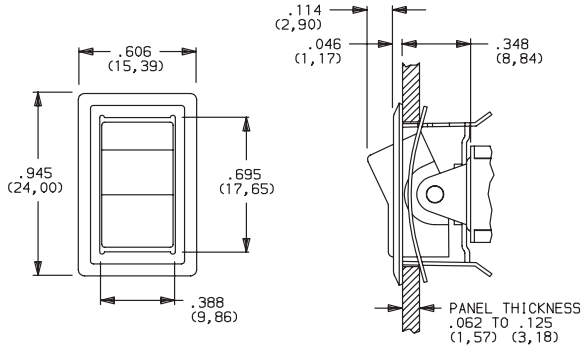

J19 ROCKER WITH FRAME

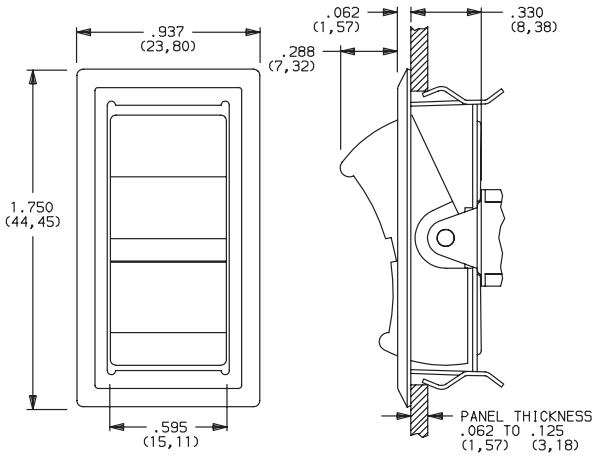

J21 LEVER WITH FRAME

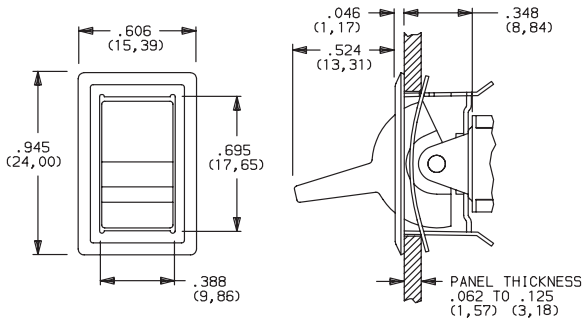

J37 ROCKER WITH FRAME

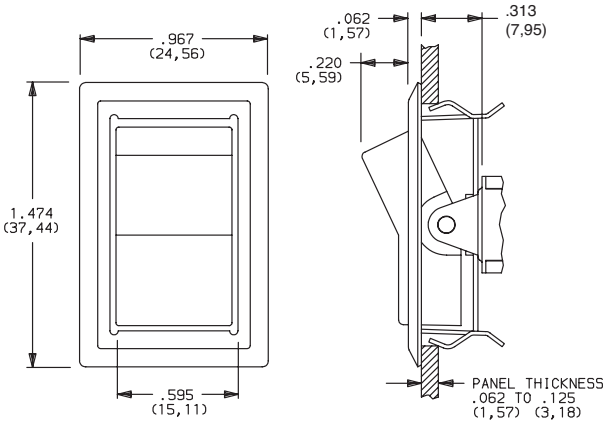

OPTION CODE	ACTUATOR COLOR
2	BLACK
1	WHITE
3	RED

OPTION CODE	FRAME COLOR
2	BLACK
1	WHITE

Actuator finish: Matte. Frame finish: Gloss. Other colors, custom actuator markings and legends available, consult Customer Service Center.

NOTE: Actuators & frames available separately, see pages G-21 through G-22. J11, J19, J21 & J37 Actuators available with C, W-W5, Z & Z3 terminations. J37 offered with Black Frame (2 color option) only.

PANEL MOUNTING

J11 & J21 Actuators

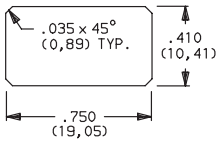

J19 Actuator

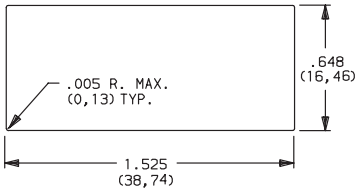

J37 Actuator

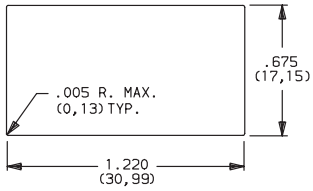

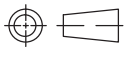

Third Angle Projection

Dimensions are shown: Inches (mm)
Specifications and dimensions subject to change

ACTUATOR–PC MOUNT

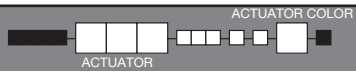

OPTION CODE	ACTUATOR COLOR
2	BLACK
1	WHITE
3	RED

Finish: Matte. Other colors, custom actuator markings and legends available, consult Customer Service Center.

NOTE: Some permissible actuator/termination combinations may lack clearance between actuator and PC board, and care must be exercised to accommodate this condition.

Actuators available separately, see page G-21 through G-22. J1, J2 actuators available with A, A3, AV2, AV3, AW3 & V2 terminations. J3 actuators available with AV2, AV3 & V2-V61 terminations. J50 actuators available with A (DP, 3P models only), A3 (DP, 3P models only), AV2, AV3, AW3 (DP, 3P models only) & V2-V61 terminations.

J1 ROCKER

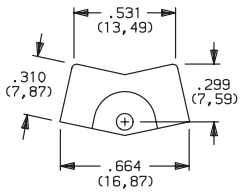

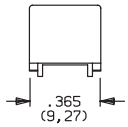

J2 LEVER

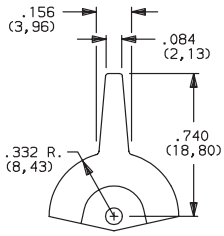

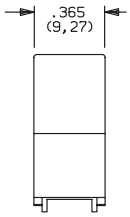

J3 ROCKER

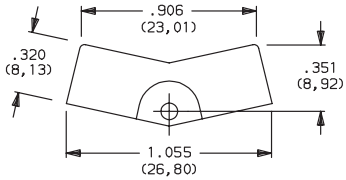

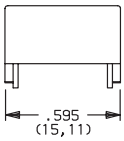

J50 ROCKER

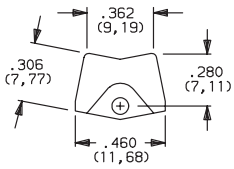

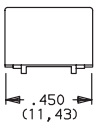

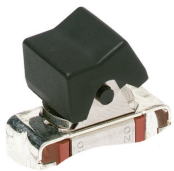

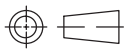

Third Angle Projection

Dimensions are shown: Inches (mm)
Specifications and dimensions subject to change

ACTUATOR–PC MOUNT

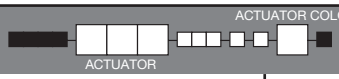

J60 LEVER

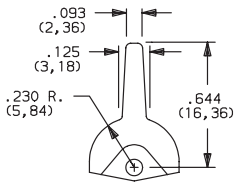

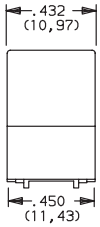

J90 LEVER

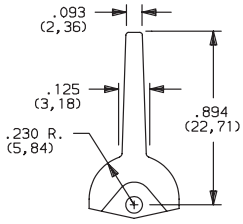

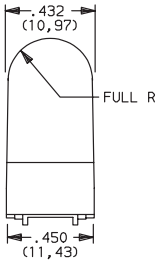

OPTION CODE	ACTUATOR COLOR
2	BLACK
1	WHITE
3	RED

Finish: Matte. Other colors, custom actuator markings and legends available, consult Customer Service Center.

NOTE: Some permissible actuator/termination combinations may lack clearance between actuator and PC board, and care must be exercised to accommodate this condition.

Actuators available separately, see page G-21 through G-22. J60 & J90 actuators available with A (DP, 3P models only), A3 (DP, 3P models only), AV2, AV3, AW3 (DP, 3P models only) & V2-V61 terminations.

TERMINATIONS

Z SOLDER LUG

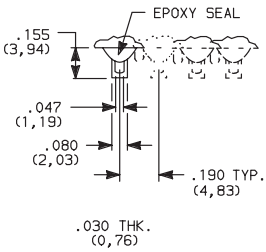

SPDT thru 4PDT

Not available with P, R or S contact materials. Available actuators, see pages G-7 through G-13.

C PC THRU-HOLE

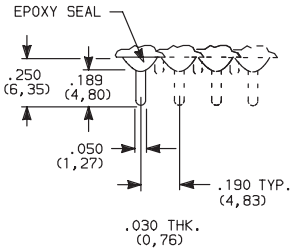

PC MOUNTING

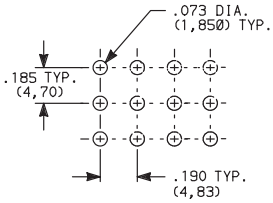

SPDT thru 4PDT

NOTE: Available actuators, see pages G-7 through G-13.

Z3 QUICK CONNECT

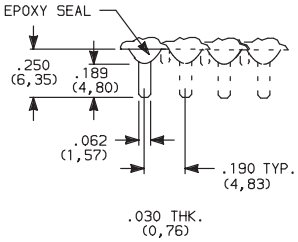

SPDT thru 4PDT

Not available with P, R or S contact materials. Available actuators, see pages G-7 through G-13. Mating quick connector available; order part number 530100000, page G-22.

W, W3, W5 WIRE WRAP

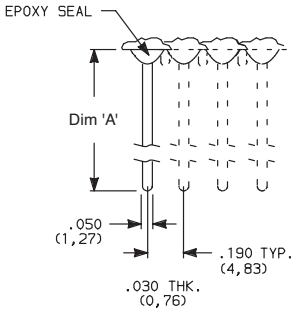

OPTION CODE	DIM 'A'
W	.750 (19,05)
W3	.425 (10,80)
W5	1.305 (33,15)

SPDT thru 4PDT

NOTE: Available actuators, see pages G-7 through G-13.

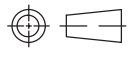

Third Angle Projection

Dimensions are shown: Inches (mm)
Specifications and dimensions subject to change

TERMINATIONS

A RIGHT ANGLE, PC THRU-HOLE

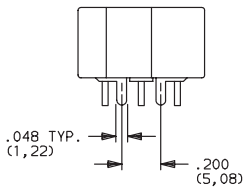

Actuator Shown In Pos. 1

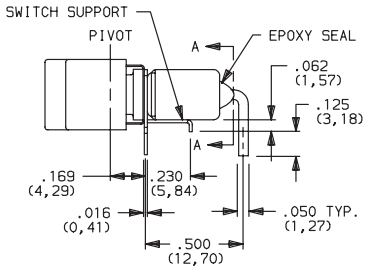

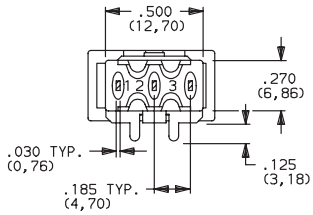

SECTION A-A

7101J1ABE2
Horizontal Actuation
SPDT

A3 RIGHT ANGLE, SNAP-IN, PC THRU-HOLE

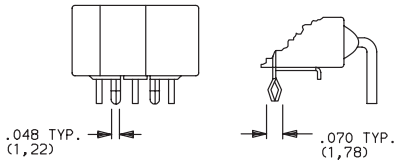

AW3 RIGHT ANGLE, EXTENDED, PC THRU-HOLE

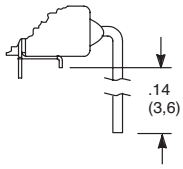

PC MOUNTING

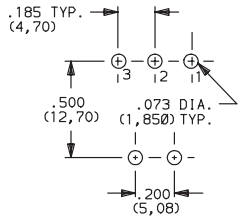

Not available with I seal option. Available actuators, see pages G-6 and G-12.
Terminal bend radii and lead-in manufacturing option.

NOTE: PC pattern must clear switch support leg.

A RIGHT ANGLE, PC THRU-HOLE

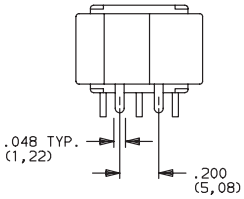

Actuator Shown In Pos. 1

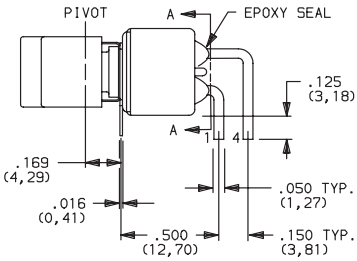

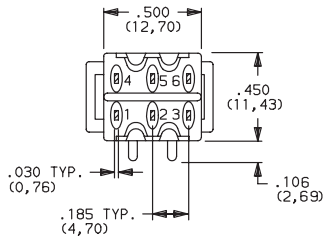

SECTION A-A

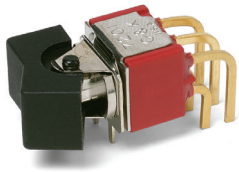

7201J1ABE2
Horizontal Actuation
DPDT

A3 RIGHT ANGLE, SNAP-IN, PC THRU-HOLE

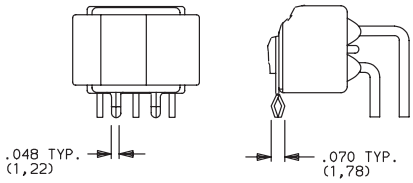

PC MOUNTING

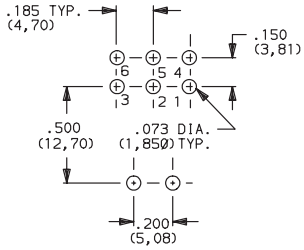

Not available with I seal option. Available actuators, see pages G-6 and G-12.
Terminal bend radii and lead-in manufacturing option.

Third Angle Projection

Dimensions are shown: Inches (mm)
Specifications and dimensions subject to change

TERMINATIONS

A RIGHT ANGLE, PC THRU-HOLE

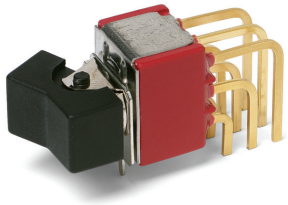

7301J1ABE2
Horizontal Actuation
3PDT

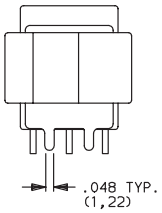

Actuator Shown In Pos. 1

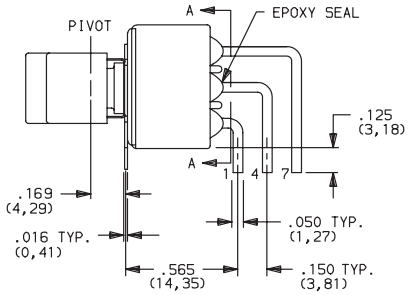

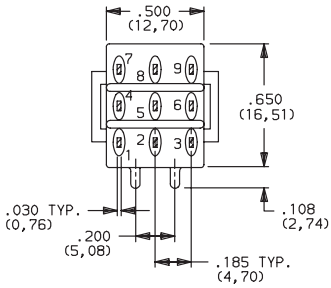

SECTION A-A

PC MOUNTING

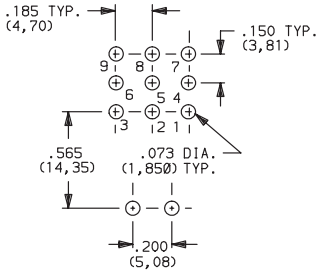

Not available with I seal option. Available actuators, see pages G-6 and G-12.
Terminal bend radii and lead-in manufacturing option.

AV2 VERTICAL RIGHT ANGLE, PC THRU-HOLE, .150" PITCH

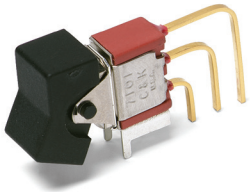

7101J1AV2BE2
Vertical Actuation
SPDT

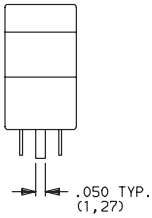

Actuator Shown In Pos. 1

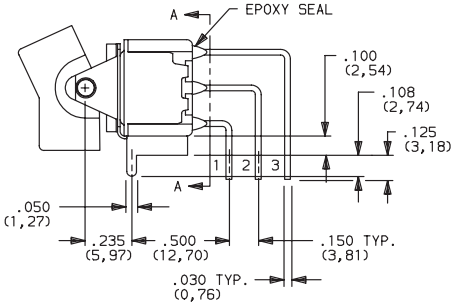

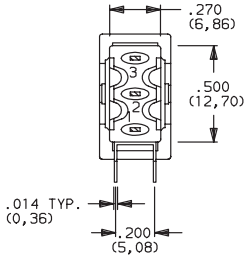

SECTION A-A

AV3 VERTICAL RIGHT ANGLE, SNAP-IN, PC THRU-HOLE, .150" PITCH

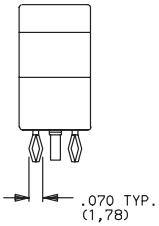

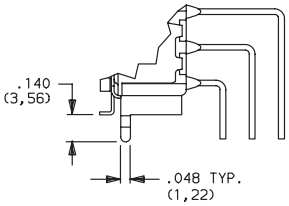

PC MOUNTING

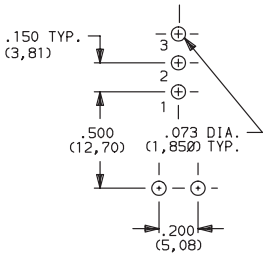

Not available with I seal option. Available actuators, see pages G-6 and G-12.
Terminal bend radii and lead-in manufacturing option.

Third Angle Projection

Dimensions are shown: Inches (mm)
Specifications and dimensions subject to change

TERMINATIONS

AV2 VERTICAL RIGHT ANGLE, PC THRU-HOLE, .150" PITCH

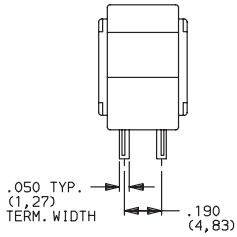

Actuator Shown In Pos. 1

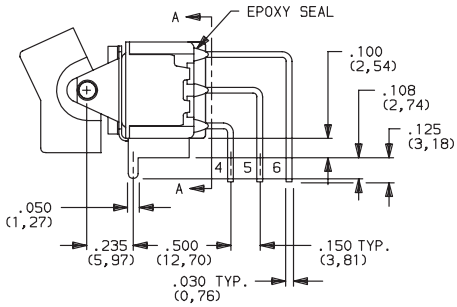

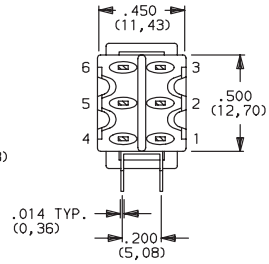

SECTION A-A

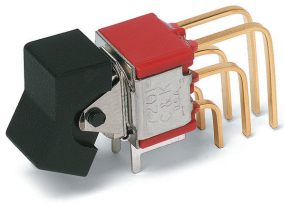

7201J1AV2BE2
Vertical Actuation
DPDT

AV3 VERTICAL RIGHT ANGLE, SNAP-IN, PC THRU-HOLE, .150" PITCH

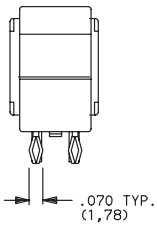

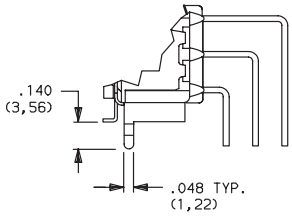

PC MOUNTING

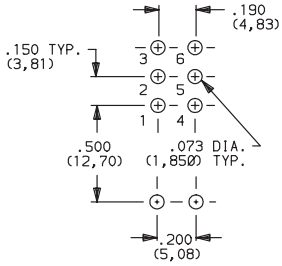

Not available with I seal option. Available actuators, see pages G-6 and G-12.
Terminal bend radii and lead-in manufacturing option.

AV2 VERTICAL RIGHT ANGLE, PC THRU-HOLE, .150" PITCH

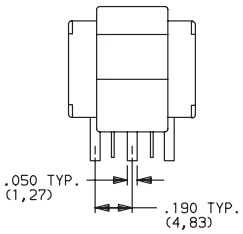

Actuator Shown In Pos. 1

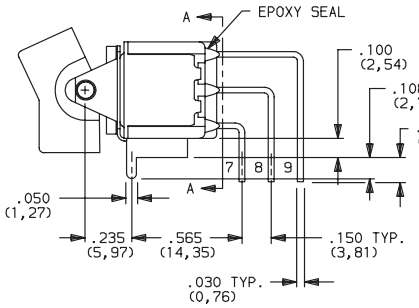

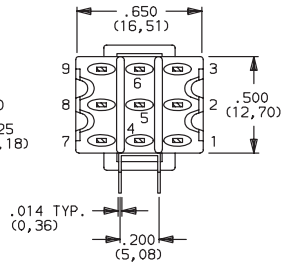

SECTION A-A

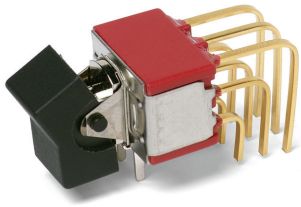

7301J1AV2BE2
Vertical Actuation
3PDT

AV3 VERTICAL RIGHT ANGLE, SNAP-IN, PC THRU-HOLE, .150" PITCH

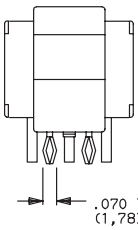

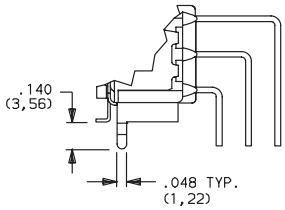

PC MOUNTING

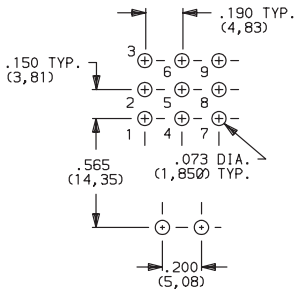

Not available with I seal option. Available actuators, see pages G-6 and G-12.
Terminal bend radii and lead-in manufacturing option.

Third Angle Projection

Dimensions are shown: Inches (mm)
Specifications and dimensions subject to change

TERMINATIONS

AV2 VERTICAL RIGHT ANGLE, PC THRU-HOLE, .150" PITCH

7401J1AV2BE2
Vertical Actuation
4PDT

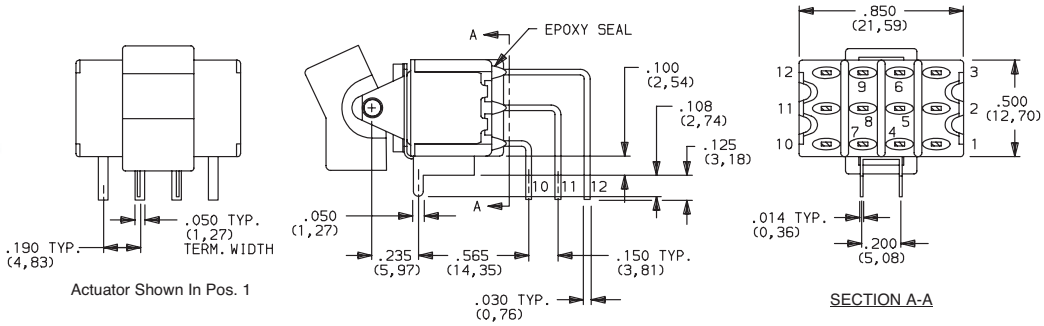

AV3 VERTICAL RIGHT ANGLE, SNAP-IN, PC THRU-HOLE, .150" PITCH

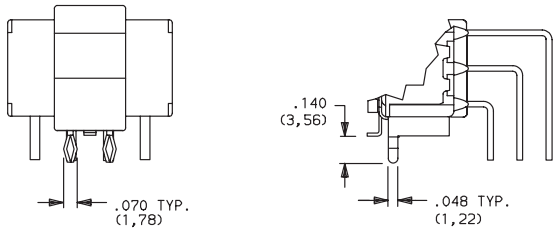

PC MOUNTING

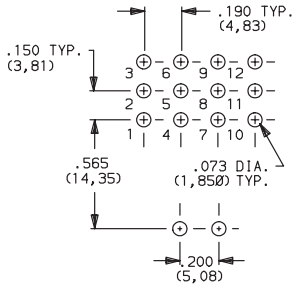

Not available with I seal option. Available actuators, see pages G-6 and G-12.
Terminal bend radii and lead-in manufacturing option.

V5 VERTICAL RIGHT ANGLE, PC THRU-HOLE, .150" PITCH

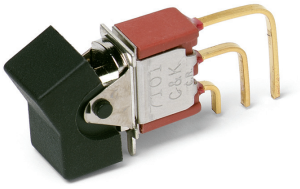

7101J1V5BE2
Vertical Actuation
SPDT

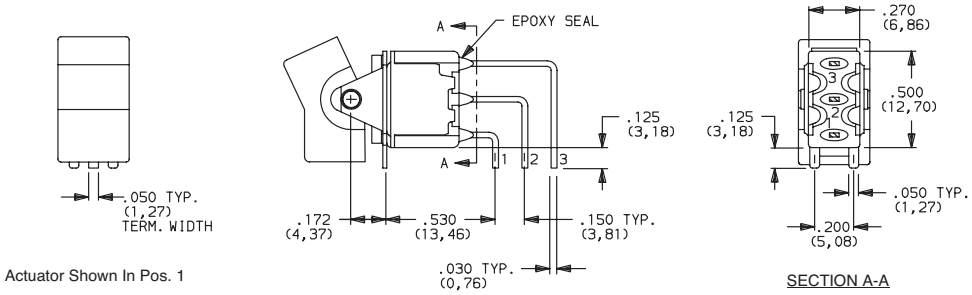

V51 VERTICAL RIGHT ANGLE, SNAP-IN, PC THRU-HOLE, .150" PITCH

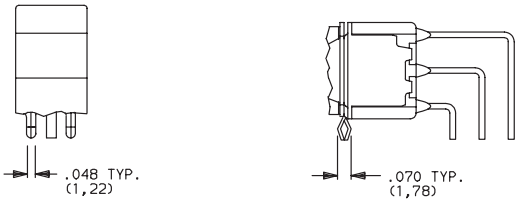

PC MOUNTING

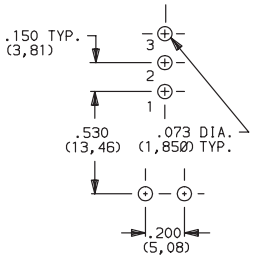

Not available with I seal option. Available actuators, see pages G-6 and G-12.
Terminal bend radii and lead-in manufacturing option.

Third Angle Projection

Dimensions are shown: Inches (mm)
Specifications and dimensions subject to change

TERMINATIONS

V5 VERTICAL RIGHT ANGLE, PC THRU-HOLE, .150" PITCH

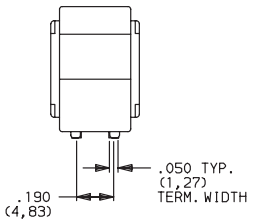

Actuator Shown In Pos. 1

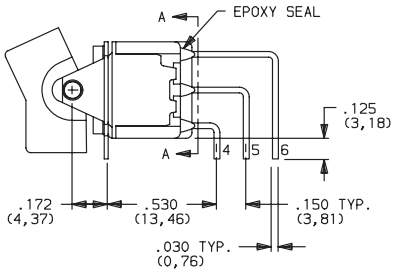

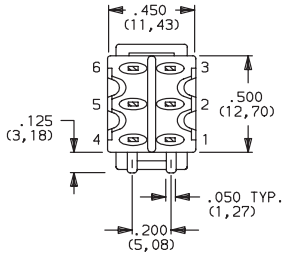

SECTION A-A

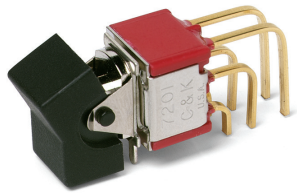

7201J1V5BE2
Vertical Actuation
DPDT

V51 VERTICAL RIGHT ANGLE, SNAP-IN, PC THRU-HOLE, .150" PITCH

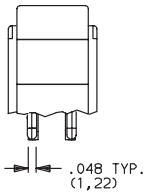

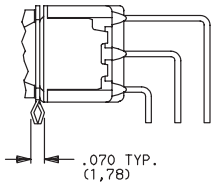

PC MOUNTING

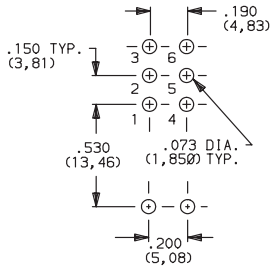

Not available with I seal option. Available actuators, see pages G-6 and G-12.
Terminal bend radii and lead-in manufacturing option.

V2, V6, V7, V8 VERTICAL MOUNT, V-BRACKET

V61 VERTICAL MOUNT, V-BRACKET, SNAP-IN

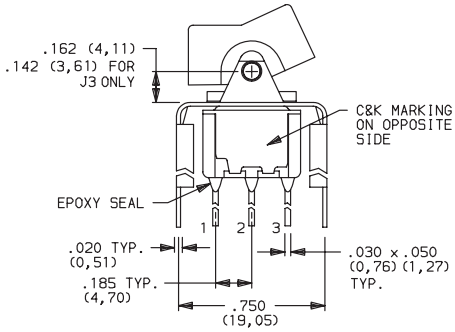

Actuator Shown In Pos. 1

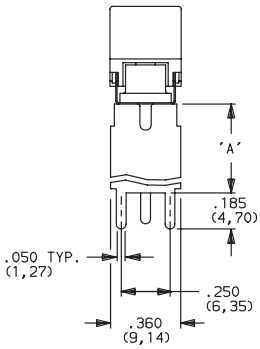

PC MOUNTING

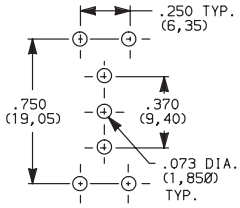

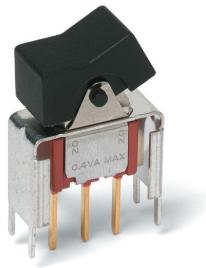

7101J1__BE2
SPDT

OPTION CODE	DIM 'A'
V2, V21	.555 (14,10)
V6, V61	.460 (11,68)
V7	.630 (16,00)
V8	.953 (24,21)

Not available with I seal option.
Available actuators, see pages G-6 and G-12.

Third Angle Projection

Dimensions are shown: Inches (mm)
Specifications and dimensions subject to change

TERMINATIONS

V2, V6, V7, V8 VERTICAL MOUNT, V-BRACKET
V21, V61 VERTICAL MOUNT, V-BRACKET, SNAP-IN

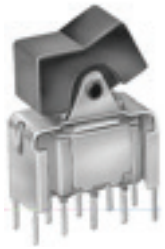

7201J1__BE2
DPDT

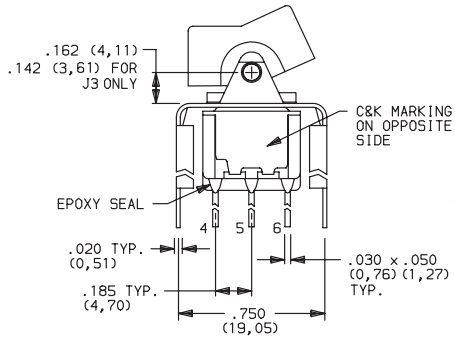

Actuator Shown In Pos. 1

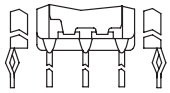

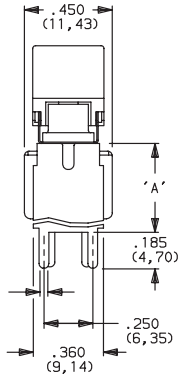

PC MOUNTING

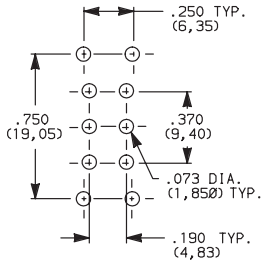

OPTION CODE	DIM 'A'
V2, V21	.555 (14,10)
V6, V61	.460 (11,68)
V7	.630 (16,00)
V8	.953 (24,21)

Not available with I seal option.
Available actuators, see pages G-6 and G-12.

V2, V7, V8 VERTICAL MOUNT, V-BRACKET
V21 VERTICAL MOUNT, V-BRACKET, SNAP-IN

7301J1__BE2
3PDT

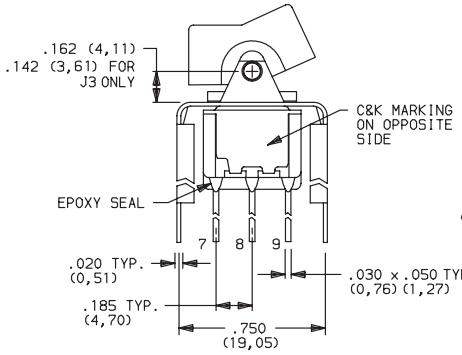

Actuator Shown In Pos. 1

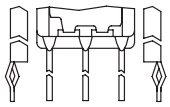

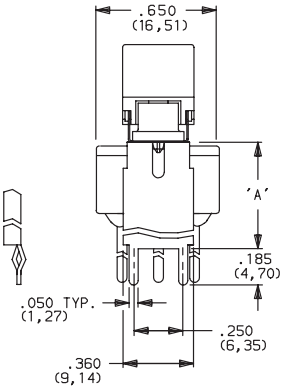

PC MOUNTING

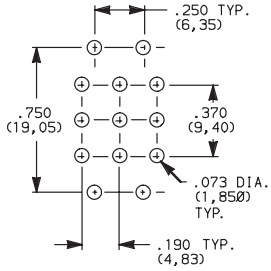

OPTION CODE	DIM 'A'
V2, V21	.555 (14,10)
V7	.630 (16,00)
V8	.953 (24,21)

Not available with I seal option.
Available actuators, see pages G-6 and G-12.

V2, V7, V8 VERTICAL MOUNT, V-BRACKET
V21 VERTICAL MOUNT, V-BRACKET, SNAP-IN

7401J1__BE2
4PDT

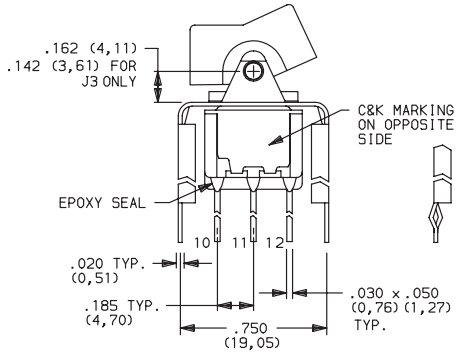

Actuator Shown In Pos. 1

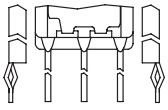

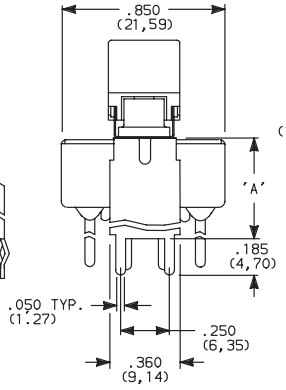

PC MOUNTING

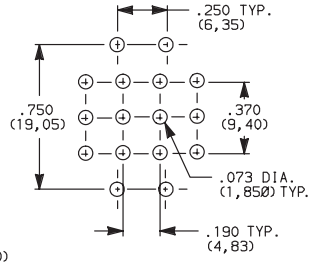

OPTION CODE	DIM 'A'
V2, V21	.555 (14,10)
V7	.630 (16,00)
V8	.953 (24,21)

Not available with I seal option.
Available actuators, see pages G-6 and G-12.

Third Angle Projection

Dimensions are shown: Inches (mm)
Specifications and dimensions subject to change

TERMINATIONS

V3, V4, V9 VERTICAL MOUNT, V-BRACKET

V31 VERTICAL MOUNT, V-BRACKET, SNAP-IN

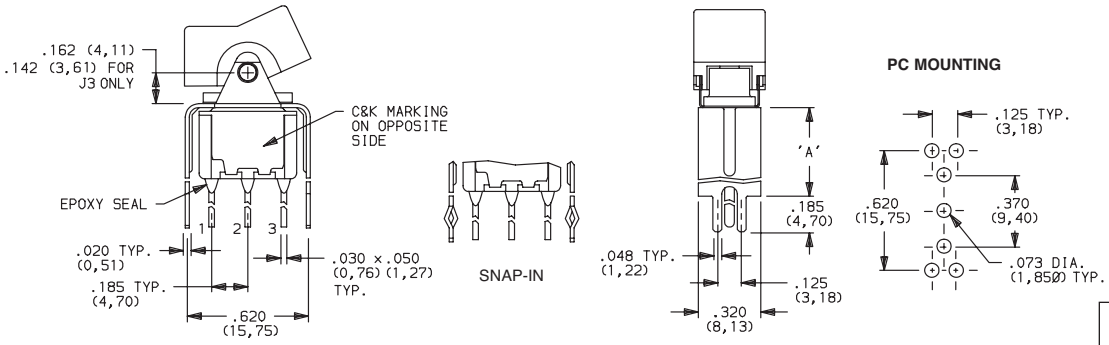

Actuator Shown In Pos. 1

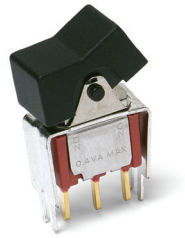

7101J1__BE2
SPDT

OPTION CODE	DIM 'A'
V3, V31	.460 (11,68)
V4	.630 (16,00)
V9	1.150 (29,21)

Not available with I seal option.
Available actuators, see pages G-6 and G-12.

V3, V4, V9 VERTICAL MOUNT, V-BRACKET

V31 VERTICAL MOUNT, V-BRACKET, SNAP-IN

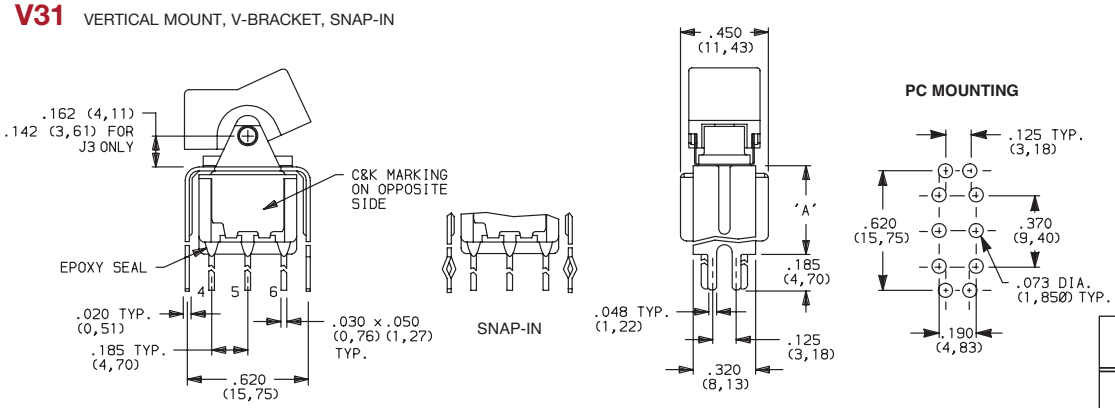

Actuator Shown In Pos. 1

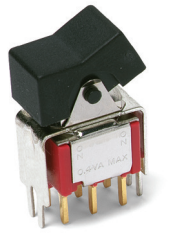

7201J1__BE2
DPDT

OPTION CODE	DIM 'A'
V3, V31	.460 (11,68)
V4	.630 (16,00)
V9	1.150 (29,21)

Not available with I seal option.
Available actuators, see pages G-6 and G-12.

V4, V9 VERTICAL MOUNT, V-BRACKET

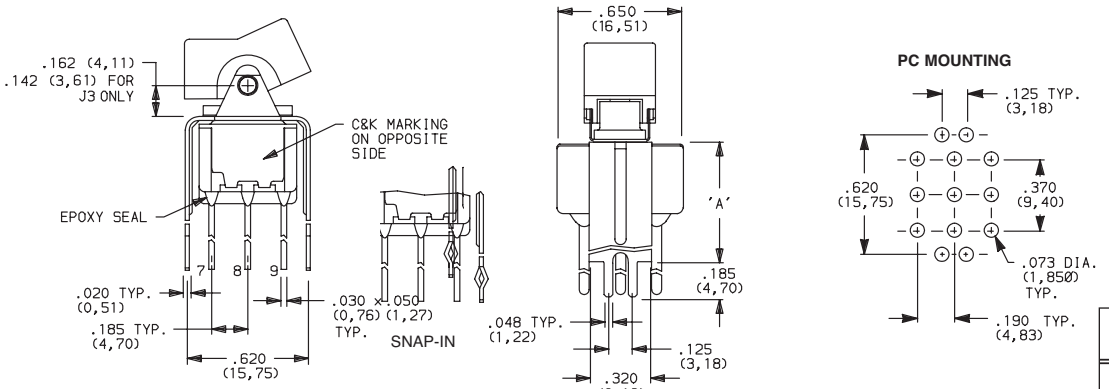

Actuator Shown In Pos. 1

7301J1__BE2
3PDT

OPTION CODE	DIM 'A'
V4	.630 (16,00)
V9	1.150 (29,21)

Not available with I seal option.
Available actuators, see pages G-6 and G-12.

Third Angle Projection

Dimensions are shown: Inches (mm)
Specifications and dimensions subject to change

TERMINATIONS

V4, V9 VERTICAL MOUNT, V-BRACKET

7401J1__BE2
4PDT

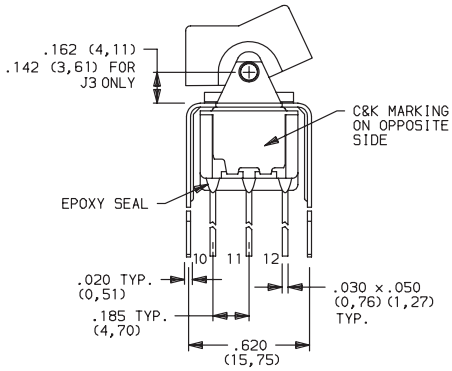

Actuator Shown In Pos. 1

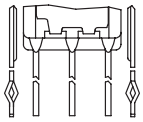

SNAP-IN

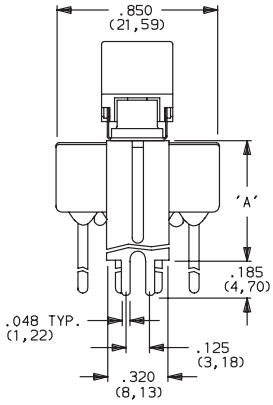

PC MOUNTING

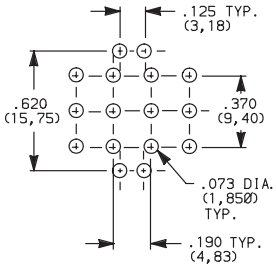

OPTION CODE	DIM 'A'
V4	.630 (16,00)
V9	1.150 (29,21)

Not available with I seal option.
Available actuators, see pages G-6 and G-12.

CONTACT MATERIAL

OPTION CODE	CONTACT MATERIAL	TERMINAL PLATING	RATINGS	
B	GOLD [1]	GOLD [1]	LOW LEVEL/ DRY CIRCUIT	0.4 VA MAX. @ 20 V AC OR DC MAX.
P		MATTE-TIN [6]		
Q	SILVER [4,5]	SILVER [5]	POWER	5 AMPS @ 120 V AC OR 28 V DC; 2 AMPS @ 250 V AC.
S		MATTE-TIN [6]		
G	GOLD OVER SILVER [2,3]	GOLD [3]	LOW LEVEL/DRY CIRCUIT OR POWER	0 4 VA MAX @ 20 V AC OR DC MAX OR 5 AMPS @ 120 V AC OR 28 V DC; 2 AMPS @ 250 V AC.
R		MATTE-TIN [6]		

* Note: See Technical Data section of this catalog for RoHS compliant and compatible definitions and specifications.

[1] CONTACTS & TERMINALS: Copper alloy, with gold plate over nickel plate.
[2] END CONTACTS: Coin silver, with gold plate over nickel plate.
[3] CENTER CONTACTS & ALL TERMINALS: Copper alloy, with gold plate over nickel plate.
[4] END CONTACTS: Coin silver, silver plated.
[5] CENTER CONTACT & ALL TERMINALS: Copper alloy, silver plated.
[6] TERMINALS: Copper alloy, with matte-tin over nickel plate.

U11-U415 model numbers c UL us with all options when ordered with G, Q, S & R contact material.

B contact material standard with all terminations except C, Z & Z3.

Q contact material standard with C, Z & Z3 terminations.

P, S & R, contact materials not available with Z & Z3 terminations.

NOTE: Any models supplied with Q, B, G S, P & R contact material are RoHS compliant.

SEAL

E EPOXY SEAL

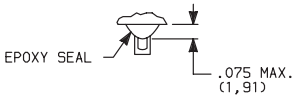

I EPOXY POTTED BASE

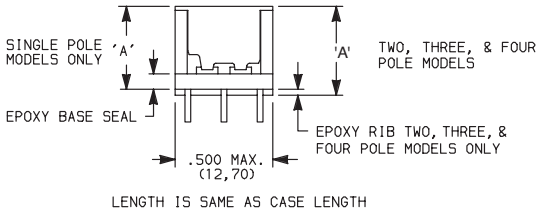

NO. POLES	DIM 'A'
SP	.410 (10,41)
DP	.440 (11,18)
3P	.505 (12,83)
4P	.505 (12,83)

Available with C, W through W5, Z & Z3 terminations.

Third Angle Projection

Dimensions are shown: Inches (mm)
Specifications and dimensions subject to change

AVAILABLE HARDWARE

Panel mounting hardware for rocker and lever handle switches is available separately. Mounting hardware consists of two screws, two nuts, two standoffs and two lockwashers per switch, and is available for panel thicknesses of 1/16, 3/32 and 1/8 inch. See part numbers below.

Qty	Part Number	Description
2	761103000	Standoffs
2	764100000	Mounting screws
2	764200000	Lock washers
2	764300000	Hex nuts

TYPICAL ASSEMBLY

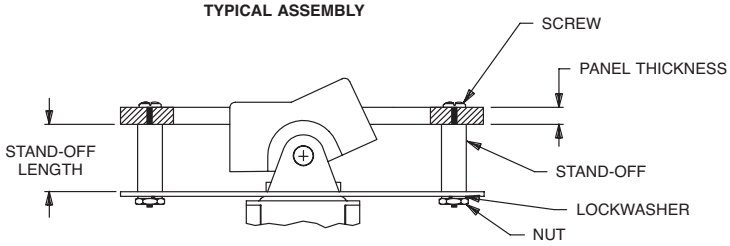

J1 & J2 actuators

PART NO.	PANEL THK.	STANDOFF LENGTH
761103000	1/8 IN. (3,18)	.233 (5,92)

J3 actuators

PART NO.	PANEL THK.	STANDOFF LENGTH
770603000	1/8 IN. (3,18)	.233 (5,92)

J10 actuators

PART NO.	PANEL THK.	STANDOFF LENGTH
770703000	1/8 IN. (3,18)	.233 (5,92)

MATERIAL

Screws, nuts, lockwashers: Stainless steel. Standoffs: Nylon, standard.

J1, J11, J15 & J16 Actuators

PART NO.

776A01000 WHITE
776A02263 BLACK
776A03000 RED

Material: Nylon
Finish: Matte

J2, J21, J25 & J26 Actuators

PART NO.

426D01000 WHITE
426D02263 BLACK
426D03000 RED

Material: Nylon
Finish: Matte

J3 & J37 Actuators

PART NO.

431D01000 WHITE
431D02263 BLACK
431D03000 RED

Material: Nylon
Finish: Matte

J50, J51 & J52 Actuators

PART NO.

775A01000 WHITE
775A02263 BLACK
775A03000 RED

Material: Nylon
Finish: Matte

J60, J61 & J62 Actuators

PART NO.

598101000 WHITE
613802263 BLACK
598103000 RED

Material: Nylon
Finish: Matte

AVAILABLE HARDWARE

J90 & J91 Actuators

PART NO.

598001000 WHITE
598002263 BLACK
598003000 RED

Material: Nylon
Finish: Matte

J10 & J19 Actuators

PART NO.

769501000 WHITE
769502263 BLACK
769503000 RED

Material: Nylon
Finish: Matte

Fits Z3 Termination female connector

PART NO.

530100000

Available in loose pieces.

Frame for J11 & J21 Actuators

PART NO.

764500746 BLACK ENAMEL
764500747 WHITE ENAMEL

764601106 RETAINING SPRING

Material: Spring Steel

Frame for J16 & J26 Actuators

PART NO.

459101000 WHITE
459102000 BLACK
459103000 RED

Material: Nylon
Finish: Matte

Frame for J51, J61 & J91 Actuators

PART NO.

615601000 WHITE
615602263 BLACK
615603000 RED

Material: Nylon
Finish: Matte

Frame for J19 Actuator

PART NO.

781000746 BLACK ENAMEL
781000747 WHITE ENAMEL

Material: Spring Steel

Frame for J37 Actuator

PART NO.

445400746 BLACK ENAMEL

Material: Spring Steel

Frame for J52 & J62 Actuators

PART NO.

613301000 WHITE
613302263 BLACK
613303000 RED

Material: Nylon
Finish: Matte

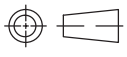

Third Angle Projection

Dimensions are shown: Inches (mm)
Specifications and dimensions subject to change

AVAILABLE HARDWARE

Frames snap into panel opening and are independent from switch mounting. Accurate positioning of the PC mounted switch relative to the panel opening is necessary to provide proper clearance between actuator and frame. Available in two basic styles and four panel thicknesses .047-.125 in. Material: Nylon. Finish: Matte.

TYPICAL APPLICATION

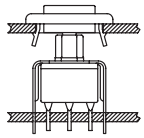

J1 & J2 Actuators

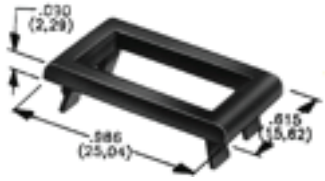

.047" (1,19) PANEL THK.	.062" (1,57) PANEL THK.	.090" (2,29) PANEL THK.	.125" (3,18) PANEL THK.
PART NO.	PART NO.	PART NO.	PART NO.
452902263	452702263	452802263	452602263 BLACK

J50, J60 & J90 Actuators

.047" (1,19) PANEL THK.	.062" (1,57) PANEL THK.	.090" (2,29) PANEL THK.	.125" (3,18) PANEL THK.
PART NO.	PART NO.	PART NO.	PART NO.
432502263	432602263	432702263	432802263 BLACK

PANEL MOUNTING

For part numbers
4529xxxxx, 4527xxxxx,
4528xxxxx, 4526xxxxx

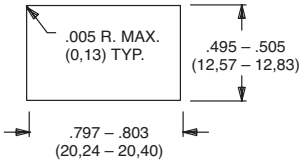

For part numbers
4325xxxxx, 4326xxxxx

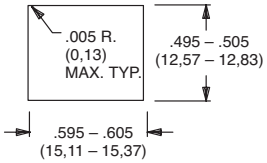

For part numbers
4327xxxxx, 4328xxxxx

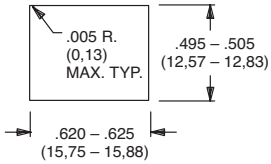

Third Angle Projection

Dimensions are shown: Inches (mm)
Specifications and dimensions subject to change

AVAILABLE HARDWARE

Panel Inserts

Will fit Separate Snap-in frames for J50, J60 & J90 actuators

Above frames (part nos. 432XXXXXX) are also available with insert which accepts LED for indicator light assembly. Order insert separately from frame. Blank insert panel (without hole for LED) also available. **LED not included.**

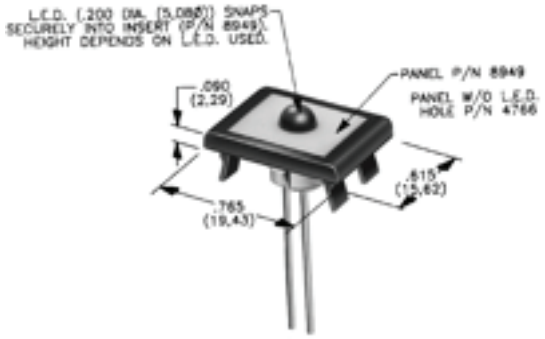

PANEL INSERT WITH HOLE FOR LED	BLANK PANEL INSERT WITHOUT HOLE FOR LED	
PART NO.	PART NO.	
894902000	476602000	BLACK

NOTE: Special colors, custom markings available, consult Customer Service Center.

LED INFORMATION

Process Information: Soldering to LED leads must be completed within 5 seconds at 500° F (260°C) maximum.

LEDs are not supplied with J52, J62 options. LED snaps into switch frame surrounding actuator and is wired externally.

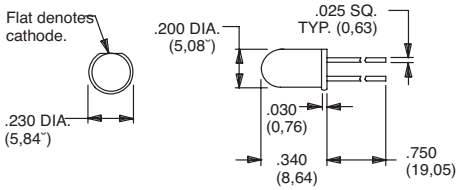

Suggested LED for J52 & J62 options.
Dimensions for reference only.

Third Angle Projection

Dimensions are shown: Inches (mm)
Specifications and dimensions subject to change