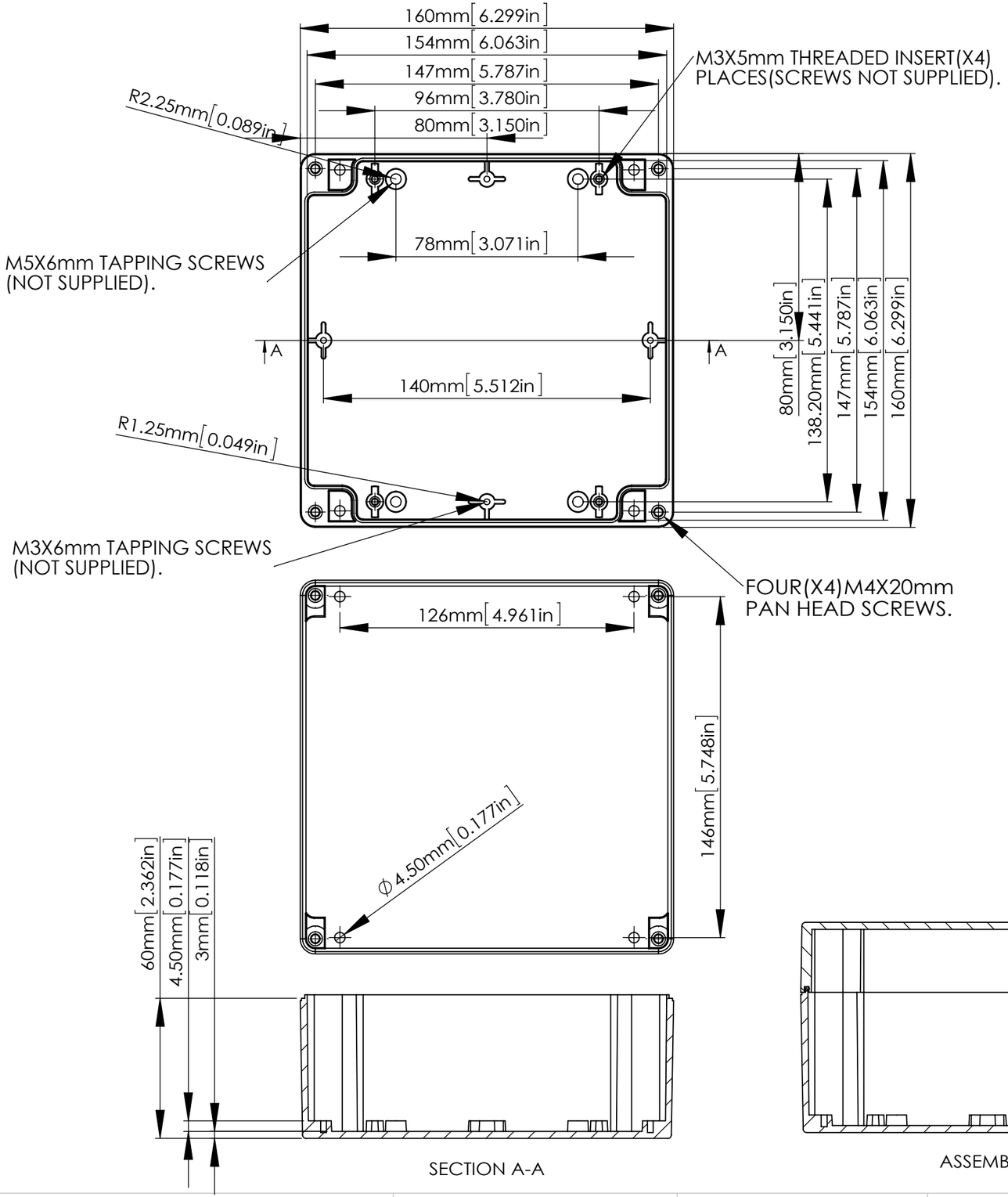

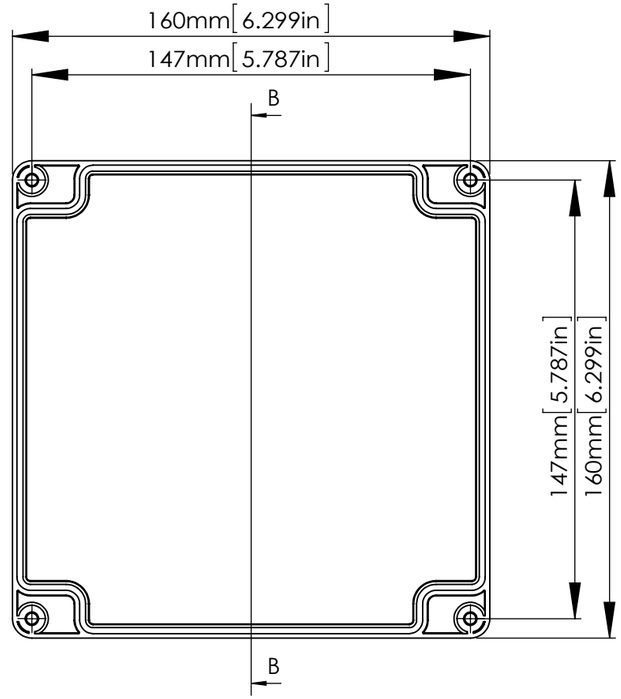

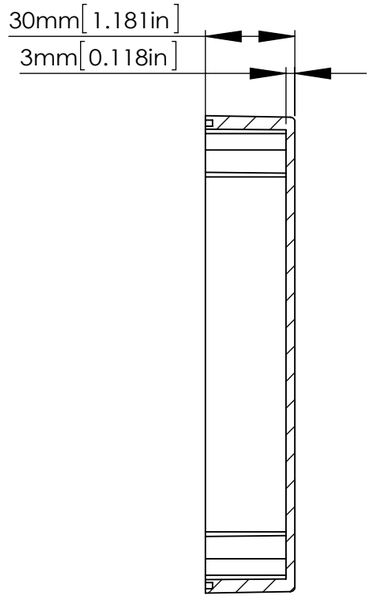

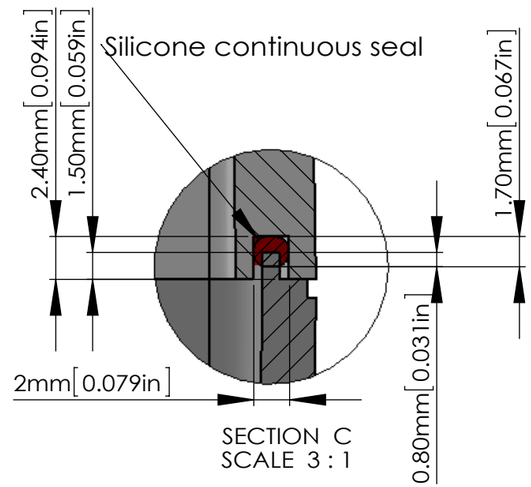

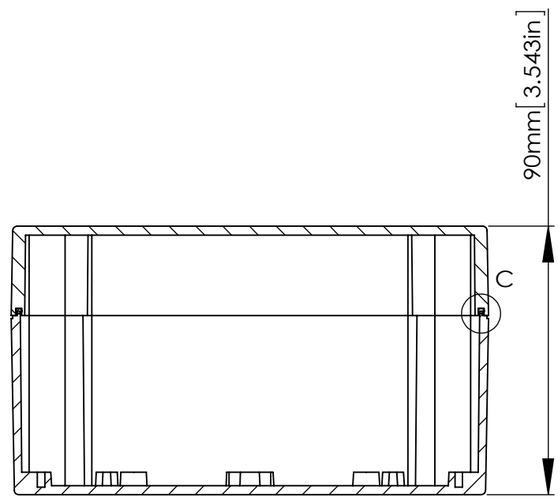

According to ISO 2768-m	
Measuring DIM=L	Tolerances
0.5<L<=3.0mm	±0.1mm
3.0<L<=6.0 mm	±0.1mm
6.0<L<=30.0 mm	±0.2mm
30.0<L<=120.0 mm	±0.3mm
120.0<L<=400.0 mm	±0.5mm
400.0<L<=1000.0 mm	±0.8mm

宣又實業有限公司 GAINTA INDUSTRIES LTD.	繪圖 DRA'D BY	日期 DATE	材質 MATE.	圖名TITLE:	圖號DWG NO:	版次REVISED:
	JACKY	2020/02/20	PC/ABS	P288-IP68/A399-IP68		A

sales@prom-elec.com / ООО ПРОМЭЛЕКТРОНИКА

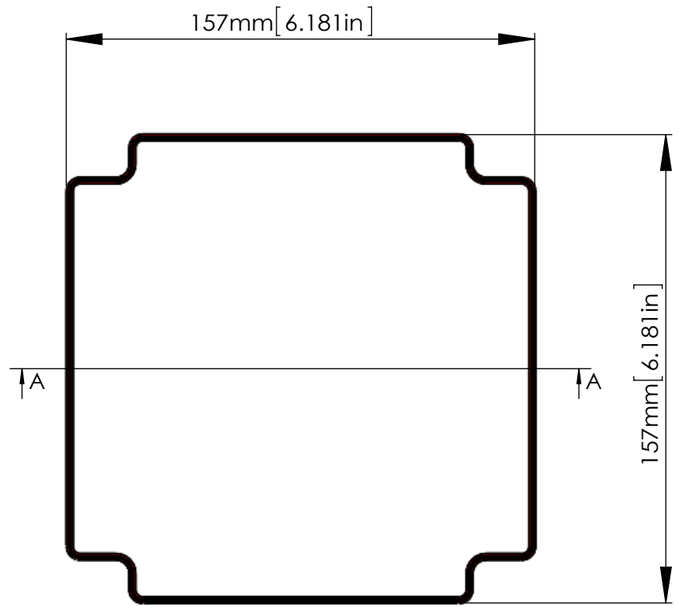

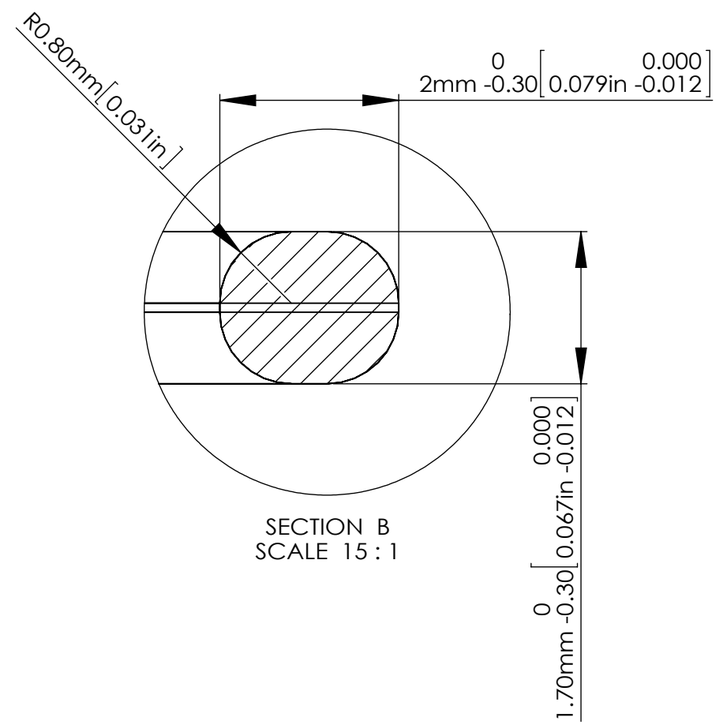

SECTION B
SCALE 15 : 1

SECTION A-A

According to ISO 2768-m	
Measuring DIM=L	Tolerances
0.5<L<=3.0mm	±0.1mm
3.0<L<=6.0 mm	±0.1mm
6.0<L<=30.0 mm	±0.2mm
30.0<L<=120.0 mm	±0.3mm
120.0<L<=400.0 mm	±0.5mm
400.0<L<=1000.0 mm	±0.8mm

宣又實業有限公司 GAINTA INDUSTRIES LTD.	繪圖 DRA'D BY	日期 DATE	材質 MATE.	圖名TITLE:	圖號DWG NO:	版次REVISED:
	JACKY	2020/02/20	SILICONE	P287SEAL/A396SEAL; P288SEAL/A399SEAL		A