Contents

6 - TeSys protection components: relays and controllers

Selection guide . . . . . **page 6/2**

- Motor and machine protection . . . . . *page 6/4*

TeSys K, thermal overload relays

- Adjustable from 0.11 to 16 A. . . . . *page 6/10*

TeSys D, 3-pole thermal overload relays

- Description, characteristics . . . . . *page 6/14*
- References . . . . . *page 6/20*
- Accessories . . . . . *page 6/25*
- Dimensions, mounting and schemes. . . . . *page 6/26*

TeSys LR9 D, 3-pole electronic thermal overload relays

- Description, characteristics . . . . . *page 6/18*
- References . . . . . *page 6/23*
- Accessories . . . . . *page 6/25*
- Dimensions . . . . . *page 6/27*
- Schemes . . . . . *page 6/29*

TeSys LR9 F, 3-pole electronic thermal overload relays

- Presentation. . . . . *page 6/30*
- Characteristics . . . . . *page 6/31*
- References . . . . . *page 6/34*
- Accessories . . . . . *page 6/36*
- Dimensions, schemes and setting-up . . . . . *page 6/38*

TeSys RM1 XA, single pole magnetic current relays

- Presentation, characteristics . . . . . *page 6/40*
- References . . . . . *page 6/41*
- Dimensions and schemes . . . . . *page 6/43*

LT3, thermistor protection units for use with PTC thermistor probes

Selection guide . . . . . **page 6/44**

- General, characteristics . . . . . *page 6/46*
- References . . . . . *page 6/50*
- Dimensions, schemes and setting-up . . . . . *page 6/52*
- Operation . . . . . *page 6/53*

6

sales@prom-elec.com / ООО ПРОМЭЛЕКТРОНИКА

TeSys LR97 D and LT47, electronic over current relays

- Presentation,description . . . . . page 6/54
- Curves, characteristics. . . . . page 6/55
- References . . . . . page 6/58
- Dimensions, mounting and schemes . . . . . page 6/59

TeSys U controllers

- Presentation. . . . . page 6/60
- Application example. . . . . page 6/60
- Characteristics . . . . . page 6/62
- References . . . . . page 6/64
- Combinations. . . . . page 6/65
- Dimensions and mounting . . . . . page 6/66
- Schemes . . . . . page 6/67

TeSys T
Motor Management System

Selection guide . . . . . ***page 6/68***

- Presentation, description . . . . . page 6/70
- Functions . . . . . page 6/75
- Programming . . . . . page 6/79
- Characteristics . . . . . page 6/81
- References . . . . . page 6/86
- Dimensions, mounting . . . . . page 6/90
- Schemes . . . . . page 6/92

TeSys protection components
Protection relays and controllers

Applications	**Motor protection**		
	Thermal motor protection		
Protection	- Motor overload - Stalling - Phase failure		
Tripping class	Class 10 A	Classes 10 A and 20	Classes 10 and 20
Communication	–		
Used with contactor type	LC1 K, LP1 K	LC1 D	LC1 F
Motor current (In)	0.11…16 A	0.1…150 A	30…630 A
Relay or controller type	**LR2 K**	**LRD, LR2 D and LR9 D**	**LR9 F**
Pages	6/12	6/20 to 6/23	6/34 and 6/35

		Machine protection		Motor and machine protection	
Protection of slip ring motors and of circuits without current peaks	**Protection of resistors, bearings, capacitors**	**Specific motor protection**		**Protection and control**	
- Strong overcurrent - Stalling	- Frequent starting - Harsh environments	- Overtorque - Mechanical shocks - Locked rotor - Phase failure	- Overtorque - Mechanical shocks	- Thermal overload - Phase imbalance and phase failure - Motor stalling - Long starting times - Earth fault	- Thermal overload - Phase imbalance and phase failure - Locked rotor - Long starting times - Phase reversal - Earth fault
–				Classes 5 to 30	Classes 5 to 30
–				AS-Interface, Modbus, CANopen, Advantys STB	Modbus, CANopen, DeviceNet, Profibus DP, Ethernet TCP/IP
All contactors					
0.7…630 A	Unlimited	0.3…38 A	0.3…60 A	0.35…800 A	0.4…810 A
RM1 XA	**LT3 S**	**LR97D**	**LT47**	**LUTM ●0BL**	**LTM R**
6/41 and 6/42	6/50	6/58		6/64	6/86

6

TeSys protection components
Motor and machine protection

Introduction

Exceeding the operating limits of an electric motor will lead, eventually, not only to destruction of the motor itself but also of the mechanisms it drives.

This type of load can be the cause of electrical or mechanical faults.
■ Electrical faults:
□ overvoltage, voltage drop, imbalance and phase failure which cause variations in the current drawn,
□ short-circuits which can cause the current to reach levels capable of destroying the load.

■ Mechanical faults:
□ locked rotor,
□ brief or prolonged overload which leads to an increase in the current drawn by the motor, and therefore overheating.

The cost of these faults must take into account loss of production, loss of raw materials, repair of the production tool, poor quality of production and delays in delivery.

These faults can also have dramatic consequences on the safety of persons in direct or indirect contact with the motor.

To prevent these faults, protection measures are necessary. They make it possible to isolate the equipment to be protected from the mains supply by measuring variations in electrical values (voltage, current, etc…).

Each motor starter must therefore have:

■ **short-circuit protection**, to detect and break, as quickly as possible, abnormal currents generally greater than 10 times the rated current (In).

■ **overload protection**, to detect increases in current up to about 10 In and switch off the starter before overheating of the motor and conductors damages the insulation.

This protection is provided by specific devices such as fuses, circuit-breakers and thermal overload relays, or by more integrated devices offering several types of protection.

Causes, effects and consequences of various faults

There are two types of fault:
■ Internal faults within the motor.
■ External faults: these are located outside the electric motor but their consequences can lead to damage inside the motor.

Faults	Causes	Effects	Consequences on the motor and on the machine
Short-circuit	Contact between several phases, or between one phase and neutral or between several turns of the same phase.	■ Current peak ■ Electrodynamic forces on the conductors	Destruction of windings
Overvoltage	■ Lightning ■ Electrostatic discharge ■ Operation	Dielectric breakdown in the windings	Destruction of the windings due to loss of insulation
Phase imbalance and phase failure	■ Opening of a phase ■ Single-phase load upstream of the motor ■ Short-circuit between the turns of the same winding	■ Reduction of usable torque, efficiency and speed ■ Increase in losses ■ Starting impossible if phase failure	Overheating *(1)*
High starting frequency	■ Failure of the automation system ■ Too many manual control operations ■ Numerous fault trips	High stator and rotor temperature rise due to the frequent start current	Overheating *(1)* Consequences on the process
Voltage variations	■ Instability of the mains voltage ■ Connection of heavy loads	■ Reduction of usable torque ■ Increase in losses	Overheating *(1)*
Harmonics	■ Pollution of the mains supply by variable speed drives, inverters, etc...	■ Reduction of usable torque ■ Increase in losses	Overheating *(1)*
Long starting time	■ Resistive torque too high (load too heavy) ■ Voltage drop	Increase in starting time	Overheating *1)*
Jamming	■ Mechanical problem (crusher) ■ Seizures	Overcurrent	Overheating *(1)* Consequences on the process
No-load running	■ Pump running empty ■ Mechanical break in drive to the load	Drop in current drawn	Consequences on the process
Frequency fluctuations	■ Overload of a supply powered by limited independent sources ■ Faulty alternator speed regulator	■ Increase in losses ■ Interferes with synchronous devices (clock, recorder, ...)	–
Overload	■ Increase in resistive torque ■ Voltage drop ■ Drop in power factor	Increase in current consumption	Overheating *(1)*
Loss of machine excitation	■ Significant drop in excitation current ■ Break in rotor winding	■ Increase in active power ■ Drop in power factor	Significant overheating of rotor and cage
Phase-Earth fault	■ Accidental Phase-Earth contacts ■ Accidental Phase-machine casing contacts (casing connected to earth)	■ Overvoltage developed in the mains supply ■ Rise in earth potential (safety of persons)	Consequences on safety of persons

(1) Then, in the longer or shorter term, depending on the seriousness of the fault and/or its frequency, short-circuit and destruction of the windings.

TeSys protection components
Motor and machine protection

Protection functions
Short-circuit protection
General

A short-circuit results in a very rapid rise in current which can reach several hundred times the value of the operational current. The consequences of a short-circuit are dangerous to both equipment and persons. It is therefore imperative to use protection devices to detect the fault and very quickly break the circuit.

Two types of protection are commonly used:
■ fuses (cutout) which break the circuit by melting, which then requires their replacement,
■ magnetic trip circuit-breakers, often more simply called "magnetic circuit-breakers", which only require re-setting to put them back into service.
Short-circuit protection can also be built-into multifunction devices such as motor circuit-breakers and contactor-breakers.

The main characteristics of short-circuit protection devices are:
■ their breaking capacity: this is the highest prospective short-circuit current value that a protection device can break at a given voltage.
■ their making capacity: this is the highest current value that the protection device can make at its rated voltage in specified conditions.
The making capacity is equal to k times the breaking capacity.

526177

LS1 D32
fuse carrier

526178

GS2 N3
switch disconnectors

Fuses (cutouts)

Fuses provide individual phase protection (single-pole), with a high breaking capacity in a compact size:
■ mounted either in fuse carriers,
■ or in isolators, replacing the original links or shunt bars.

For motor protection, aM type fuses are used. Their design characteristics allow them to conduct the high magnetising currents that occur when motors are switched on. They are therefore unsuitable for overload protection (unlike gG type fuses). This is why an overload relay must be included in the motor power supply circuit.

6

526179

GV2 L
magnetic circuit-breraker

526180

TeSys U LUB 12 starter with
LUCA●● control unit

Magnetic circuit-breakers

These circuit-breakers protect installations against short-circuits, within the limit of their breaking capacity.
Magnetic circuit-breakers provide omnipole breaking as standard.
For relatively low short-circuit currents, the operation of a circuit-breaker is faster than that of fuses.
This protection conforms to standard IEC 60947-2.
The thermal and electrodymanic effects are also limited, therefore ensuring better protection of cables and equipment.

526181

LRD 02
thermal overload relay

526182

LRD 365
thermal overload relay

526183

RM4 JA current measurement relay

526184

TeSys U starter with "thermal overload alarm" function module

Protection functions (continued)

Overload protection

General

An overload condition is the most frequently encountered fault. The symptoms are a rise in the current drawn by the motor and thermal effects. A rapid return to normal operating conditions is important.
The actual operating conditions (ambient temperature, operating altitude and type of standard duty) are essential to determine the operating values of the motor (power, current) and to be able to select effective overload protection. These operational values are given by the motor manufacturer.

According to the level required, protection can be provided by:
- overload relays and thermal overload relays (bi-metallic or electronic type) which protect motors in the event of:
  - overload, by monitoring the current drawn by each phase,
  - phase imbalance or failure, by their differential mechanism.
- relays with PTC thermistor probes (Positive Temperature Coefficient).
- overtorque relays,
- multifunction relays.

Overload relays

These relays protect motors against overload. They must allow the temporary overload that occurs on starting and must only trip if the starting time is abnormally long.
The overload relay will be selected according to the length of the starting time (tripping class) and the motor rating.
These relays have a thermal memory (except for certain electronic overload relays, indicated by their manufacturers) and can be connected:
- either in series with the load,
- or to current transformers placed in series with the load.

Bi-metallic thermal overload relays
Combined with a contactor, these relays protect the line and the equipment against small and prolonged overloads. They must be protected against strong overcurrent by a circuit-breaker or fuses.
These relays may be used on an a.c. or d.c. system and are generally:
- 3-pole,
- compensated, i.e. insensitive to ambient temperature variations,
- with manual or automatic reset,
- graduated with a "motor FLC" scale: allowing direct setting to the full load current as shown on the motor rating plate.

They can also be sensitive to phase failure: this is known as 'differential'. This function conforms to standards IEC 60947-4-1 and 60947-6-2
This type of relay is extremely reliable and is a relatively low cost device.

Electronic thermal overload relays
Electronic thermal overload relays have the advantage of electronics which allow a more complex thermal image of the motor to be created.
They can be combined with products having complementary functions, such as:
- temperature sensing via PTC probes,
- protection against jamming and overtorque,
- protection against phase reversal,
- earth fault protection,
- protection against no-load running,
- alarm function.

6

526185

LT3 S relays for use with thermistor probes

526186

LR97 D07 instantaneous electronic overcurrent relays

526187

TeSys U LUB 32 starter with multifunction control unit LUC M

526188

TeSys U controller LUTM 20BL

526189

TeSys T controller LTM R08MBD

Protection functions (continued)

Overload protection (continued)

Relays for use with PTC thermistor probes

With direct sensing of the stator windings, these relays can be used to protect motors against:
- overload,
- a rise in ambient temperature,
- a ventilation circuit fault,
- a high starting frequency,
- mechanical shocks, etc...

Overload (or overtorque) relays

These relays protect the drive line in the event of a locked rotor, seizure or mechanical shocks. This is an additional protection.
Unlike thermal overload relays, these relays do not have a thermal memory. They have definite time characteristics (adjustable current threshold and time delay).
The overtorque relay can be used as overload protection for motors with long starting times or very frequent starting (for example, lifting hoists).

Multifunction relays

- Overcurrent relays are limited when it is necessary to take into account problems associated with voltage, temperature or special applications. New production or maintenance management needs have prompted manufacturers to offer products which provide not only adaptable protection, but also complete management of the motor and its load.

They incorporate:
- current and voltage sensors (TeSys T controllers),
- hybrid analog and digital electronic technology,
- the use of communication buses for data exchange and control,
- powerful motor modelling algorithms,
- integrated application programs whose parameters can be set.

These products make it possible to reduce installation and operating costs by reducing maintenance and downtime.

TeSys U starters:
The multifunction relay is incorporated in the motor starter.
This solution is very compact with reduced wiring. It is limited to 32 A.

TeSys U controllers:
The multifunction relay is separate from the power line and reuses the function blocks from the TeSys U solution. It can be used in conjunction with a contactor up to 810 A.

TeSys T controllers:
The multifunction relay is separate from the power line and incorporates inputs and outputs. It can be used in conjunction with a contactor up to 810 A.

TeSys protection components

Motor and machine protection

Protection relay selection table

	Motor protection		Machine protection	Motor and machine protection	
Relay type	**Thermal overload relay** **LR2 K, LRD, LRD 3, LR9 F, LR9 D** *(1)*	**Relays for use with PTC probes** **LT3 S**	**Overtorque relays** **LR97 D, LT47**	**TeSys U controller** **LUT M**	**TeSys T controller** **LTM R**
Causes of overheating	*(2)*		*(2)*	*(2)*	*(3)*
Slight overload					
Locked rotor					
No-load running					
Supply phase failure			LR9 7D		
Ventilation fault					With probes
Abnormal temperature rise					With probes
Shaft bearing seizure					With probes
Insulation fault					
Protracted starting time					
Severe duty					With probes
Voltage variation					
Frequency fluctuations					
Loss of machine excitation					

Ideally suited

Possible solution

Not suitable (no protection)

(1) for motor circuit-breaker type GV2ME.
(2) Protection based on current.
(3) Protection based on current and voltage.

TeSys protection components

TeSys K thermal overload relays, adjustable from 0.11 to 16 A

Environment

Conforming to standards			IEC 60947, NF C 63-650, VDE 0660, BS 4941
Product certifications			UL, CSA
Protective treatment	Conforming to IEC 60068 (DIN 50016)		"TC" (Klimafest, Climateproof)
Degree of protection	Conforming to VDE 0106		Protection against direct finger contact
Ambient air temperature around the device	Storage	**°C**	- 40...+ 70
	For normal operation (IEC 60947)	**°C**	- 20...+ 55 (without derating)
	Operating limit	**°C**	- 30...+ 60 (with derating) *(1)*
Maximum operating altitude	Without derating	**m**	2000
Operating positions			**Vertical axis** 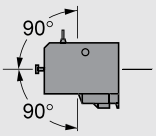 Without derating; **Horizontal axis** 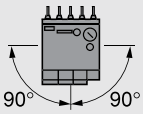 With derating *(1)*
Flame resistance	Conforming to UL 94		Self-extinguishing material V1
	Conforming to NF F 16-101 and 16-102		Conforming to requirement 2
Shock resistance, hot state (1/2 sine wave, 11 ms)	Conforming to IEC 60068, N/C contact		10 gn
	Conforming to IEC 60068, N/O contact		10 gn
Vibration resistance, hot state 5 to 300 Hz	Conforming to IEC 60068, N/C contact		2 gn
	Conforming to IEC 60068, N/O contact		2 gn
Safe separation of circuits	Conforming to VDE 0106 and IEC 60536		VLSV *(2)*, up to 400 V

Cabling Screw clamp terminals			**Minimum**	**Maximum**	**Maximum to IEC 60947**
	Solid cable	**mm²**	1 x 1.5	2 x 4	1 x 4 + 1 x 2.5
	Flexible cable without cable end	**mm²**	1 x 0.75	2 x 4	2 x 2.5
	Flexible cable with cable end	**mm²**	1 x 0.34	1 x 1.5 + 1 x 2.5	1 x 1.5 + 1 x 2.5

Tightening torque	Philips head n° 2 - Ø 6	**N.m**	0.8
Mounting			Directly under the contactor or reversing contactor
Connections			Made automatically when mounted under the contactor, as follows : ■ contactor terminal A2 connected to overload relay terminal 96 on all products, ■ contactor terminal 14 connected to overload relay terminal 95 on products with 3 P + N/O. When using 3 P + N/C, or 4 P contactors, or the N/O auxiliary contact marked 13-14, at a voltage other than the coil voltage, break off the link marked 14.

Auxiliary contact characteristics

Number of contacts			1 N/C + 1 N/O						
Conventional thermal current		**A**	6						
Short-circuit protection	Conforming to IEC 60947, VDE 0660. gG fuse or circuit-breaker **GB2 CB●●**	**A**	6 max.						
Maximum power of the controlled contactor coils (sealed) (Occasional operating cycles of contact 95-96)	a.c.	**V**	24	48	110	220/230	400	415/440	600/690
		VA	100	200	400	600	600	600	600
	d.c.	**V**	24	48	110	220	250	–	–
		W	100	100	50	45	35	–	–
Maximum operational voltage	a.c., category AC-15	**V**	690						
	d.c., category DC-13	**V**	250						

(1) Please consult your Regional Sales Office.
(2) Very low safety voltage.

References : page 6/12
Dimensions : page 6/13
Schemes : page 6/13

TeSys protection components

TeSys K thermal overload relays, adjustable from 0.11 to 16 A

Electrical characteristics of the power circuit			
Rated operational voltage (Ue)	Up to	**V**	690
Rated insulation voltage (Ui)	Conforming to BS 4941	**V**	690
	Conforming to IEC 60947	**V**	690
	Conforming to VDE 0110 group C	**V**	750
	Conforming to CSA C 22-2 n° 14	**V**	600
Rated impulse withstand voltage (Uimp)		**kV**	6
Frequency limits of the operational current		**Hz**	Up to 400
Power dissipated per pole		**W**	2

Operating characteristics			
Sensitivity to phase failure	Conforming to IEC 60947		Yes
Reset	Manual or automatic		Selected by means of a lockable and sealable switch on the front of the relay
Signalling	On front of relay		Trip indicator
Reset-Stop function			Pressing the Reset-Stop button : - actuates the N/C contact - has no effect on the N/O contact
Test function	By pushbutton		Pressing the Test button enables : - checking of the control circuit wiring - simulation of overload tripping (actuation of both N/C and N/O contacts, and of the trip indicator)
Short-circuit protection and coordination			See pages 1/18 and 1/28

Tripping curves

Average operating time related to multiples of the current setting (Class 10 A)

Balanced 3-phase operation, from cold state

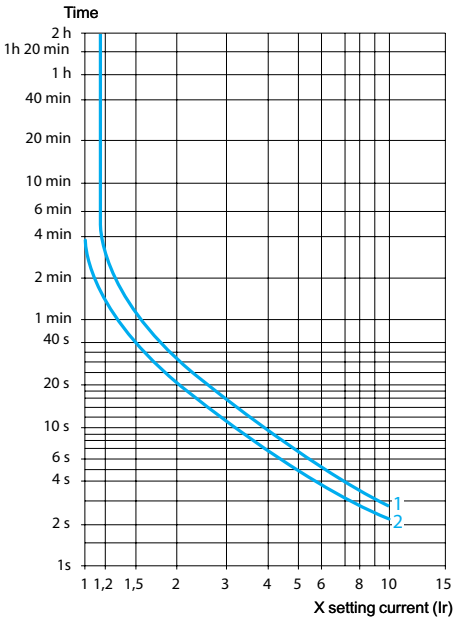

Balanced operation with 2 phases only, from cold state

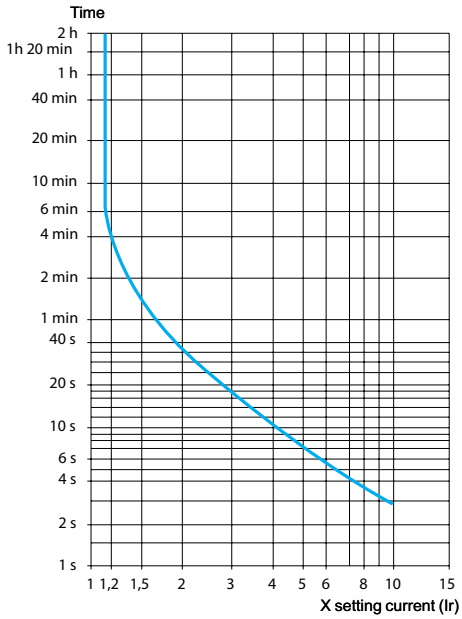

1 Setting : at lower end of scale

2 Setting : at upper end of scale

6

References : page 6/12
Dimensions : page 6/13
Schemes : page 6/13

TeSys protection components

TeSys K thermal overload relays, adjustable from 0.11 to 16 A

3-pole relays with screw clamp terminals

These overload relays are designed for the protection of motors. They are compensated and phase failure sensitive. Resetting can either be manual or automatic.
Direct mounting: under the contactor for versions with screw clamp terminals only; pre-wired terminals, see pages 6/10 and 6/13.
Separate mounting: using terminal block LA7 K0064 (see below).
On the front face of the overload relay:
- selection of reset mode: Manual (marked H) or Automatic (marked A),
- red pushbutton: Trip Test function,
- blue pushbutton: Stop and manual Reset,
- yellow trip flag indicator: overload relay tripped.

Protection by magnetic circuit-breaker GV2 LE, see pages 1/18 and 1/28.

106167_1

LR2 K0307

Class 10 A (the standard specifies a tripping time of between 2 and 10 seconds at 7.2 In)

Relay setting range	Fuses to be used with selected relay Maximum rating Type			Reference	Weight
	aM	gG	BS88		
A	A	A	A		kg
0.11…0.16	0.25	0.5	–	**LR2 K0301**	0.145
0.16…0.23	0.25	0.5	–	**LR2 K0302**	0.145
0.23…0.36	0.5	1	–	**LR2 K0303**	0.145
0.36…0.54	1	1.6	–	**LR2 K0304**	0.145
0.54…0.8	1	2	–	**LR2 K0305**	0.145
0.8…1.2	2	4	6	**LR2 K0306**	0.145
1.2…1.8	2	6	6	**LR2 K0307**	0.145
1.8…2.6	4	8	10	**LR2 K0308**	0.145
2.6…3.7	4	10	16	**LR2 K0310**	0.145
3.7…5.5	6	16	16	**LR2 K0312**	0.145
5.5…8	8	20	20	**LR2 K0314**	0.145
8…11.5	10	25	20	**LR2 K0316**	0.145
10…14	16	32	25	**LR2 K0321**	0.145
12…16	20	40	32	**LR2 K0322**	0.145

Overload relays for unbalanced loads

Class 10 A: To order, replace the prefix **LR2** by **LR7** in the references selected from above (only applicable to overload relays **LR2 K0305** to **LR2 K0322**).
Example: **LR7 K0308**.

812559

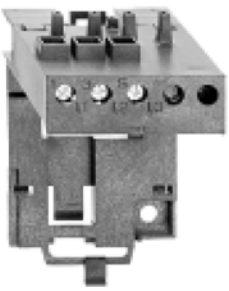

LA7 K0064

Accessory

Description	Type of connection	Reference	Weight kg
Terminal block for separate clip-on mounting of the overload relay on 35 mm ⎍ rail	Screw clamp	**LA7 K0064**	0.100

Characteristics: pages 6/10 and 6/11
Dimensions: page 6/13
Schemes: page 6/13

Schneider Electric

Dimensions, mounting

LR2 K

Direct mounting beneath the contactor

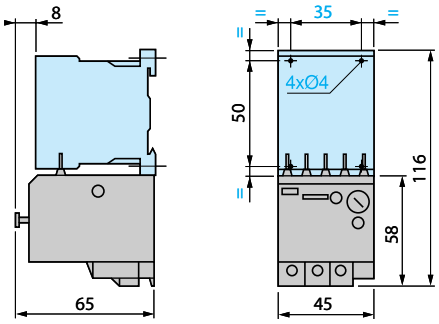

Separate mounting with terminal block LA7 K0064 on 35 mm ⎍ rail
(AM1 DP200 or AM1 DE200)

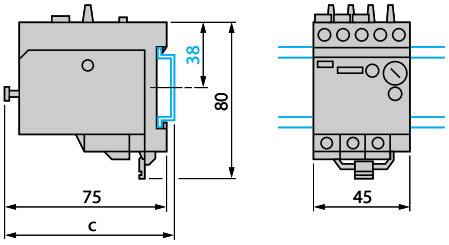

AM1	c
DP200	78.5
DE200	86

Schemes

LR2 K

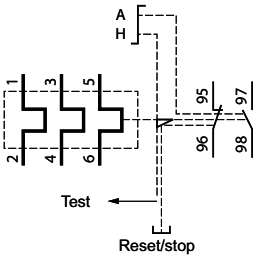

LR2 K + LC● K

Pre-wiring scheme

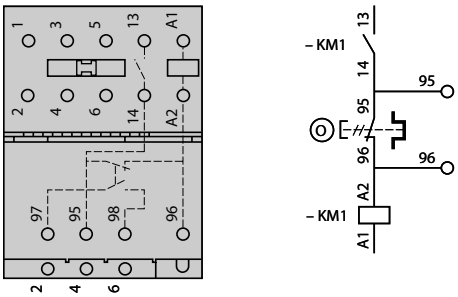

LR7 K

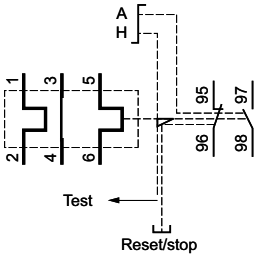

Note : *If pre-wiring is not required, break off the 2 links located on the thermal overload relay.*

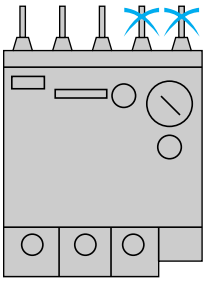

Characteristics:
pages 6/10 and 6/11

References:
page 6/12

TeSys protection components

3-pole thermal overload relays

TeSys D

Presentation

526212

LRD 08

526213

LRD 365

EverLink®

526215

LRD 33●●

TeSys D thermal overload relays are designed to protect a.c. circuits and motors against:
- overloads,
- phase failure,
- excessively long starting times,
- prolonged stalled rotor condition.

Power connection

LRD 01 to LRD 35

LRD 01 to 35 relays are designed for connection by screw clamp terminals.
They can be supplied for connection by spring terminals or by lugs *(1)*.

LRD 313 to LRD 365

LRD 313 to 365 relays are for connection by BTR screw connectors (hexagon socket head).
The screws are tightened by means of a size 4, insulated Allen key.
This type of connection uses the **Ever**Link® system with creep compensation *(2)* (Schneider Electric patent).
This technique makes it possible to achieve accurate and durable tightening torque.

These relays are also available for connection by lugs *(1)*.

LRD 3361 to 4369, LR2 D3561 to D3563

LRD 3361 to 4369 and LR2 D3561 to D3563 relays are designed for connection by screw clamp terminals. They can be supplied for connection by lugs *(1)*.

6

Description

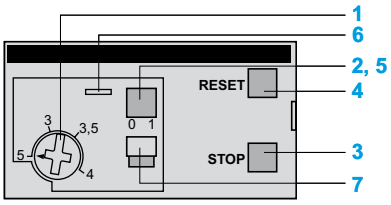

LRD 01…35 and LRD 313…LRD 365

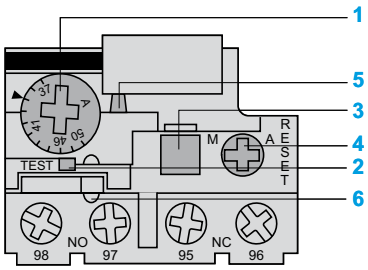

LRD 3361…4369, LR2 D3561…3563

TeSys D 3-pole thermal overload relays are designed to protect a.c. circuits and motors against overloads, phase failure, long starting times and prolonged stalling of the motor.

1 Adjustment dial Ir.
2 Test button.
Operation of the Test button allows:
- checking of control circuit wiring,
- simulation of relay tripping (actuates both the N/O and N/C contacts).
3 Stop button. Actuates the N/C contact; does not affect the N/O contact.
4 Reset button.
5 Trip indicator.
6 Setting locked by sealing the cover.
7 Selector for manual or automatic reset.

LRD 01 to 35 and LRD 313 to LRD 365 relays are supplied with the selector in the manual position, protected by a cover. Deliberate action is required to move it to the automatic position.

(1) Connection by lugs meets the requirements of certain Asian markets and is suitable for applications subject to strong vibration, such as railway transport.
(2) Creep: normal crushing phenomenon of copper conductors, that is accentuated over time.

References:
pages 6/20 to 6/22
Dimensions, mounting :
pages 6/26 to 6/28
Schemes:
page 6/29

Schneider Electric

TeSys protection components

3-pole thermal overload relays

TeSys D

Environment

Conforming to standards			IEC/EN 60947-4-1, IEC/EN 60947-5-1, UL 508, CSA C22.2 n° 14. ATEX directive 94/9/EC *(1)*
Product certifications			UL, CSA. CCC, GOST ATEX INERIS *(1)*. GL, DNV, RINA, BV, LROS *(2)*.
Degree of protection	Conforming to VDE 0106		Protection against direct finger contact IP 2X
Protective treatment	Conforming to IEC 60068		"TH"
Ambient air temperature around the device	Storage	**°C**	- 60…+ 70
	Normal operation, without derating (IEC 60947-4-1)	**°C**	- 20…+ 60
	Minimum /maximum operating temperatures (with derating)	**°C**	- 40…+ 70
Operating positions without derating	In relation to normal vertical mounting plane		Any position. When mounting on a vertical rail, use a stop.
Flame resistance	Conforming to UL 94		V1
	Conforming to IEC 60695-2-1	**°C**	850
Shock resistance	Permissible acceleration conforming to IEC 60068-2-7		15 gn - 11 ms
Vibration resistance *(3)*	Permissible acceleration conforming to IEC 60068-2-6		6 gn
Dielectric strength at 50 Hz	Conforming to IEC 60255-5	**kV**	6
Surge withstand	Conforming to IEC 60801-5	**kV**	6

Electrical characteristics of power circuit

Relay type			**LRD 01 …16, LR3 D01 …16**	**LRD 1508 …1532**	**LRD 21 …35, LR3 D21 …35**	**LRD 313 …365 LR3 D313 …365**	**LRD 313L …365L**	**LRD 3322 …33696 LR3 D3322 … 33696**	**LR2 D3522 … 3563**	**LRD 4365 …4369**
Tripping class	Conforming to UL 508, IEC 60947-4-1		10 A	20	10 A	10 A	20	10 A	20	10 A
Rated insulation voltage (Ui)	Conforming to IEC 60947-4-1	**V**	690					1000		
	Conforming to UL, CSA	**V**	600							600 except **LRD 4369**
Rated impulse withstand voltage (Uimp)		**kV**	6							
Frequency limits	Of the operating current	**Hz**	0…400							
Setting range	Depending on model	**A**	0.1…13	2.5…32	12…38	9…65	9…65	17…140	17…80	80…140

Auxiliary contact characteristics

Conventional thermal current		**A**	5					
Max. sealed consumption of the operating coils of controlled contactors (Occasional operating cycles of contact 95-96)	a.c. supply, AC-15	**V**	120	240	380	480	500	600
		A	3	1.5	0.95	0.75	0.72	0.12
	d.c. supply, DC-13	**V**	125	250	440			
		A	0.22	0.1	0.06			
Protection against short-circuits	By gG, BS fuses. Maximum rating or by **GB2**	**A**	5					

(1) For relays LRD01 to LRD365.
(2) Pending for relays LRD313 to LRD365.
(3) For relays LRD 313 to LRD 365: 6 gn only with independent plate mounting and 4 gn when mounted beneath the contactor.

References:
pages 6/20 to 6/22

Dimensions, mounting :
pages 6/26 to 6/28

Schemes:
page 6/29

Power circuit connection characteristics

Relay type			LRD 01 …16, LR3 D01 …16	LRD 1508 …1532	LRD 21 …35, LR3 D21 …35	LRD 313 …365 LR3 D313 …365	LRD 313L …365L	LRD 3322 …33696 LR3 D3322 … 33696	LR2 D3522 …3563	LRD 4365 …4369
Connection to screw clamp terminals										
Flexible cable without cable end	1 conductor	mm²	1.5…10		1.5…10	1…35	1…35	4…35		4…50
Flexible cable with cable end	1 conductor	mm²	1…4		1…6 except **LRD 21:** 1…4	1…35	1…35	4…35		4…35
Solid cable without cable end	1 conductor	mm²	1…6		1.5/10 except **LRD 21:** 1/6	1…35	1…35	4…35		4…50
Tightening torque		N.m	1.7	1.85	2.5	1…25 : 5 35 : 8	1…25 : 5 35 : 8	9	9	9
Connection to spring terminals (Min/max c.s.a.)										
Flexible cable without cable end	1 conductor	mm²	1.5…4	–	1.5…4	–	–	–	–	–
Flexible cable with cable end	1 conductor	mm²	1.5…4	–	1.5…4	–	–	–	–	–

Connection by bars or lugs

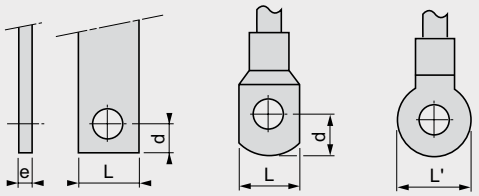

Relay type			LRD 016 … 166	LRD 216 … 356	LRD 3136 … 3656	LRD 313L6 … 365L6	LRD 3322A66 … 3365A66
Pitch	Without spreaders	mm	14.5	17.5	17.5	17.5	21.5
Bars or cables with lugs	**e**	N.m	≤ 6	≤ 6	≤ 6	≤ 6	≤ 6
	L	mm	≤ 8	≤ 8	≤ 13.5	≤ 13.5	≤ 16
	L'	mm	≤ 9.5	≤ 10	≤ 16.5	≤ 16.5	≤ 16
	d		≤ 7	≤ 7	≤ 10	≤ 10	≤ 12
Screws			M4	M4	M6	M6	M10
	Tightening torque	N.m	2.3	2.3	6	6	11.3

Control circuit connection characteristics

Connection to screw clamp terminals or spring terminals

Bare cables

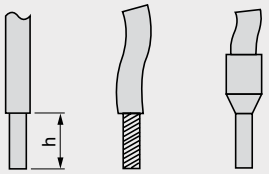

Relay type			LRD 01 …16, LR3 D01 …16	LRD 1508 … 1532	LRD 21 …35, LR3 D21 …35	LRD 313 …365 LR3 D313 …365	LRD 313L …365L	LRD 3322 …33696 LR3 D3322 … 33696	LR2 D3522 … 3563	LRD 4365 …4369
Connection to screw clamp terminals *(1)*	Solid cable without cable end	mm²	2 x 1…2.5							
	Flexible cable without cable end	mm²	2 x 1…2.5							
	Flexible cable with cable end	mm²	2 x 1…2.5							
Tightening torque		N.m	1.7							
Connection to spring terminals (Min/max c.s.a.)	Solid cable	mm²	1…2.5	–	1…2.5			–		
	Flexible cable without cable end	mm²	1…2.5	–	1…2.5			–		

*(1) For relays LRD 313 to 365: BTR hexagon socket head screws, **Ever**Link® system.*
*In accordance with local electrical wiring regulations, a size 4 insulated Allen key must be used (reference **LAD ALLEN4**, see page 5/85).*

References: pages 6/20 to 6/22
Dimensions, mounting : pages 6/26 to 6/28
Schemes: page 6/29

Operating characteristics

Relay type			LRD 01 …16, LR3 D01 …16	LRD 1508 … 1532	LRD 21 …35, LR3 D21 …35	LRD 313 …365 LR3 D313 …365	LRD 313L …365L	LRD 3322 …33696 LR3 D3322 … 33696	LR2 D3522 … 3563	LRD 4365 …4369
Temperature compensation		**°C**	- 20…+ 60							
Tripping threshold	Conforming to IEC 60947-4-1	**A**	1.14 ± 0.06 Ir							
Sensitivity to phase failure	Conforming to IEC 60947-4-1		Tripping current I 30 % of Ir on one phase, the others at Ir.							

Tripping curves
Average operating time related to multiples of the setting current

LRD 01 to LRD 35, LR2 D and LRD 3322 to LRD 4369

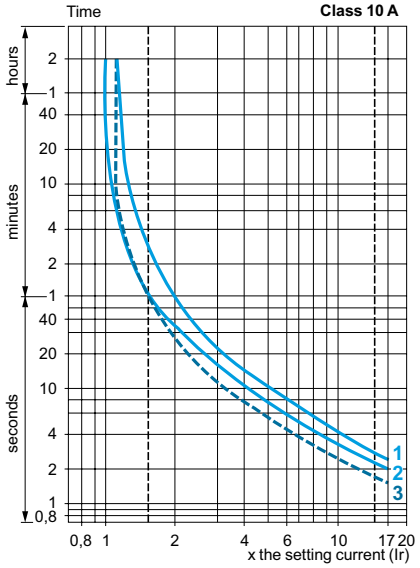

LRD 1508 to LRD 32 and LR2 D3522 to LR2 D3563

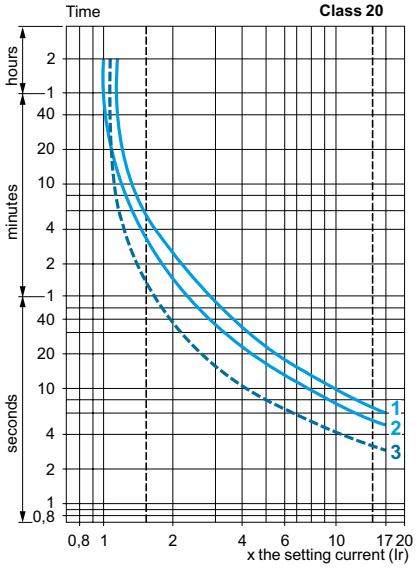

LRD 313 to LRD 365

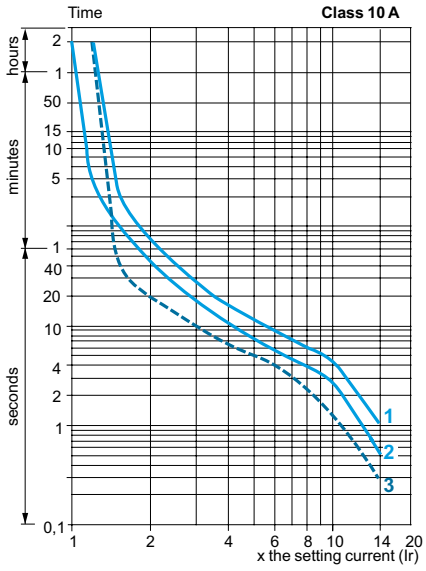

LRD 313L to LRD 365L

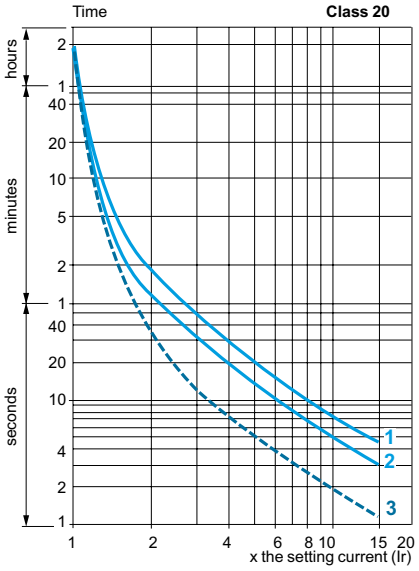

1 Balanced operation, 3-phase, without prior current flow (cold state).
2 2-phase operation, without prior current flow (cold state).
3 Balanced operation, 3-phase, after a long period at the set current (hot state).

References:
pages 6/20 to 6/22

Dimensions, mounting :
pages 6/26 to 6/28

Schemes:
page 6/29

TeSys protection components

3-pole electronic thermal overload relays, TeSys LR9 D

Description

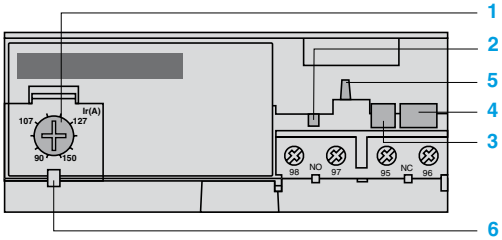

LR9 D5367…D5569

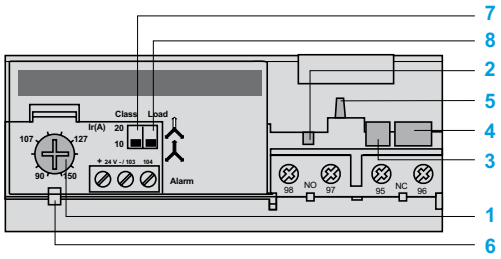

LR9 D67 and D69

LR9 D electronic thermal overload relays are designed for use with contactors LC1 D115 and D150.

In addition to the protection provided by TeSys D thermal overload relays (see page 6/14), they offer the following special features:
- protection against phase imbalance,
- choice of starting class,
- protection of unbalanced circuits,
- protection of single-phase circuits,
- alarm function to avoid tripping by load shedding.

1 Adjustment dial Ir.
2 Test button.
3 Stop button.
4 Reset button.
5 Trip indicator.
6 Setting locked by sealing the cover.
7 Class 10/class 20 selector switch.
8 Selector for balanced load /unbalanced load

Environment

Conforming to standards			IEC 60947-4-1, 255-8, 255-17, VDE 0660 and EN 60947-4-1
Product certifications			UL 508 , CSA 22-2
Degree of protection	Conforming to IEC 60529 and VDE 0106		IP 20 on front panel with protective covers **LA9 D11570●** or **D11560●**
Protective treatment	Standard version		"TH"
Ambient air temperature around the device (Conforming to IEC 60255-8)	Storage	**°C**	- 40…+ 85
	Normal operation	**°C**	- 20…+ 55 *(1)*
Maximum operating altitude	Without derating	**m**	2000
Operating positions without derating	In relation to normal vertical mounting plane		Any position
Shock resistance	Permissible acceleration conforming to IEC 60068-2-7		13 gn - 11 ms
Vibration resistance	Permissible acceleration conforming to IEC 60068-2-6		2 gn - 5…300 Hz
Dielectric strength at 50 Hz	Conforming to IEC 60255-5	**kV**	6
Surge withstand	Conforming to IEC 61000-4-5	**kV**	6
Resistance to electrostatic discharge	Conforming to IEC 61000-4-2	**kV**	8
Immunity to radiated radio-frequency disturbances	Conforming to IEC 61000-4-3 and NF C 46-022	**V/m**	10
Immunity to fast transient currents	Conforming to IEC 61000-4-4	**kV**	2
Electromagnetic compatibility	Draft EN 50081-1 and 2, EN 50082-2		Meets requirements

Electrical characteristics of auxiliary contacts

Conventional thermal current		**A**	5					
Max. sealed consumption of the operating coils of controlled contactors (Occasional operating cycles of contact 95-96)	a.c. supply	**V**	24	48	110	220	380	600
		VA	100	200	400	600	600	600
	d.c. supply	**V**	24	48	110	220	440	–
		W	100	100	50	45	25	–
Protection against short-circuits	By gG or BS fuses or by circuit-breaker **GB2**	**A**	5					
Cabling Flexible cable without cable end	1 or 2 conductors	**mm²**	Minimum c.s.a.: 1 Maximum c.s.a.: 2.5					
	Tightening torque	**Nm**	1.2					

(1) For operating temperatures up to 70 °C, please consult your Regional Sales Office.

References: pages 6/20 to 6/21
Dimensions, mounting : pages 6/26 to 6/28
Schemes: page 6/29

TeSys protection components

3-pole electronic thermal overload relays, TeSys LR9 D

Relay type			LR9 D
Electrical characteristics of power circuit			
Tripping class	Conforming to UL 508, IEC 60947-4-1	**A**	10 or 20
Rated insulation voltage (Ui)	Conforming to IEC 60947-4-1	**V**	1000
	Conforming to UL, CSA	**V**	600
Rated impulse withstand voltage (Uimp)		**Hz**	8
Frequency limits	Of the operating current	**Hz**	50…60 *(1)*
Setting range	Depending on model	**A**	60…150
Power circuit connections	Width of terminal lug	**mm**	20
	Clamping screw		M8
	Tightening torque	**N.m**	18
Operating characteristics			
Temperature compensation		**°C**	- 20…+ 70
Tripping thresholds	Conforming to IEC 60947-4-1		
	Alarm	**A**	1.05 ± 0.06 In
	Trip	**A**	1.12 ± 0.06 In
Sensitivity to phase failure	Conforming to IEC 60947-4-1		Tripping in 4 s ± 20 % in the event of phase failure
Alarm circuit characteristics			
Rated supply voltage	d.c. supply	**V**	24
Supply voltage limits		**V**	17…32
Current consumption	No-load	**mA**	≤ 5
Switching capacity		**mA**	0…150
Protection	Short-circuit and overload		Self protected
Voltage drop	Closed state	**V**	≤ 2.5
Cabling	Flexible cable without cable end	**mm²**	0.5…1.5
Tightening torque		**N.m**	0.45

(1) For other frequencies and for applications involving the use of these overload relays with soft starters or variable speed drives, please consult your Regional Sales Office.

LR9 D tripping curves

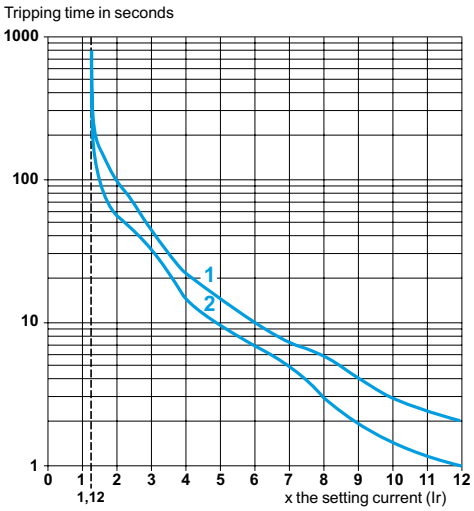

Average operating time related to multiples of the setting current

1 Cold state curve
2 Hot state curve

References: pages 6/20 to 6/22
Dimensions, mounting : pages 6/26 to 6/28
Schemes: page 6/29

526200

LRD ●●

526201

LRD 3●●

526202

LRD 33●●

526203

LRD 3●●6

Differential thermal overload relays
for use with fuses or magnetic circuit-breakers GV2 L and GV3 L

- Compensated relays with manual or automatic reset,
- with relay trip indicator,
- for a.c. or d.c.

Relay setting range (A)	Fuses to be used with selected relay aM (A)	gG (A)	BS88 (A)	For use with contactor LC1	Reference	Weight kg
Class 10 A *(1)* **for connection by screw clamp terminals or connectors**						
0.10…0.16	0.25	2	–	D09…D38	**LRD 01**	0.124
0.16…0.25	0.5	2	–	D09…D38	**LRD 02**	0.124
0.25…0.40	1	2	–	D09…D38	**LRD 03**	0.124
0.40…0.63	1	2	–	D09…D38	**LRD 04**	0.124
0.63…1	2	4	–	D09…D38	**LRD 05**	0.124
1…1.6	2	4	6	D09…D38	**LRD 06**	0.124
1.6…2.5	4	6	10	D09…D38	**LRD 07**	0.124
2.5…4	6	10	16	D09…D38	**LRD 08**	0.124
4…6	8	16	16	D09…D38	**LRD 10**	0.124
5.5…8	12	20	20	D09…D38	**LRD 12**	0.124
7…10	12	20	20	D09…D38	**LRD 14**	0.124
9…13	16	25	25	D12…D38	**LRD 16**	0.124
12…18	20	35	32	D18…D38	**LRD 21**	0.124
16…24	25	50	50	D25…D38	**LRD 22**	0.124
23…32	40	63	63	D25…D38	**LRD 32**	0.124
30…38	40	80	80	D32 and D38	**LRD 35**	0.124
Class 10 A *(1)* **for connection by EverLink® BTR screw connectors** *(3)*						
9…13	16	25	25	D40A…D65A	**LRD 313**	0.375
12…18	20	32	35	D40A…D65A	**LRD 318**	0.375
17…25	25	50	50	D40A…D65A	**LRD 325**	0.375
23…32	40	63	63	D40A…D65A	**LRD 332**	0.375
30…40	40	80	80	D40A…D65A	**LRD 340**	0.375
37…50	63	100	100	D40A…D65A	**LRD 350**	0.375
48…65	63	100	100	D50A and D65A	**LRD 365**	0.375
Class 10 A *(1)* **for connection by screw clamp terminals or connectors**						
17…25	25	50	50	D80 and D95	**LRD 3322**	0.510
23…32	40	63	63	D80 and D95	**LRD 3353**	0.510
30…40	40	100	80	D80 and D95	**LRD 3355**	0.510
37…					**LRD 3357**	0.510
48…					**LRD 3359**	0.510
55…					**LRD 3361**	0.510
63…					**LRD 3363**	0.510
80…					**LRD 3365**	0.510
80…104	125	200	160	D115 and D150	**LRD 4365**	0.900
95…120	125	200	200	D115 and D150	**LRD 4367**	0.900
110…140	160	250	200	D150	**LRD 4369**	0.900
80…104	100	160	160	*(2)*	**LRD 33656**	1.000
95…120	125	200	200	*(2)*	**LRD 33676**	1.000
110…140	160	250	200	*(2)*	**LRD 33696**	1.000
Class 10 A *(1)* **for connection by lugs**						

Not LRoS certified

Select the appropriate overload relay with screw clamp terminals or connectors from the table above and add one of the following suffixes:

- figure **6** for relays LRD 01 to LRD 35 and relays LRD 313 to LRD 365.
- **A66** for relays LRD 3322 to LRD 3365.

Relays LRD 43●● are suitable, as standard, for use with lug-clamps.

Thermal overload relays for use with unbalanced loads
Class 10 A *(1)* **for connection by screw clamp terminals or lugs**

In the references selected above, change the prefix **LRD** (except **LRD 4●●●**) to **LR3 D**.
Example: **LRD 01** becomes **LR3 D01**.
Example with **Ever**Link®connectors: **LRD 340** becomes **LR3 D340**.
Example with lugs: **LRD 3406** becomes **LR3 D3406**.

(1) Standard IEC 60947-4-1 specifies a tripping time for 7.2 times the setting current I_R :
class 10 A: between 2 and 10 seconds
(2) Independent mounting of the contactor.
*(3) BTR screws: hexagon socket head. In accordance with local electrical wiring regulations, a size 4 insulated Allen key must be used (reference **LAD ALLEN4**, see page 5/85).*

Characteristics: pages 6/14 to 6/17
Dimensions: pages 6/26 to 6/28
Schemes: page 6/29

526204

LRD ●●3

Differential thermal overload relays

for use with fuses or magnetic circuit-breakers GV2 L and GV3 L

- Compensated relays with manual or automatic reset,
- with relay trip indicator,
- for a.c. or d.c.

Relay setting range (A)	Fuses to be used with selected relay aM (A)	gG (A)	BS88 (A)	For use with contactor LC1	Reference	Weight kg
Classes 10 A *(1)* **for connection by spring terminals (only for direct mounting beneath the contactor)**						
0.10…0.16	0.25	2	–	D09…D38	**LRD 013**	0.140
0.16…0.25	0.5	2	–	D09…D38	**LRD 023**	0.140
0.25…0.40	1	2	–	D09…D38	**LRD 033**	0.140
0.40…0.63	1	2	–	D09…D38	**LRD 043**	0.140
0.63…1	2	4	–	D09…D38	**LRD 053**	0.140
1…1.6	2	4	6	D09…D38	**LRD 063**	0.140
1.6…2.5	4	6	10	D09…D38	**LRD 073**	0.140
2.5…4	6	10	16	D09…D38	**LRD 083**	0.140
4…6	8	16	16	D09…D38	**LRD 103**	0.140
5.5…8	12	20	20	D09…D38	**LRD 123**	0.140
7…10	12	20	20	D09…D38	**LRD 143**	0.140
9…13	16	25	25	D12…D38	**LRD 163**	0.140
12…18	20	35	32	D18…D38	**LRD 213**	0.140
16…24	25	50	50	D25…D38	**LRD 223**	0.140
Class 10 A with connection by EverLink® BTR screw connectors *(2)* **and control by spring terminals**						
9…13	16	25	25	D40A…D65A	**LRD 3133**	0.375
12…18	20	32	35	D40A…D65A	**LRD 3183**	0.375
17…25	25	50	50	D40A…D65A	**LRD 3253**	0.375
23…32	40	63	63	D40A…D65A	**LRD 3323**	0.375
30…40	40	80	80	D40A…D65A	**LRD 3403**	0.375
37…50	63	100	100	D40A…D65A	**LRD 3503**	0.375
48…65	63	100	100	D50A and D65A	**LRD 3653**	0.375

Thermal overload relays for use with unbalanced loads

Classes 10 A *(1)* **for connection by BTR screw connectors** *(2)* **and control by spring terminals**

In the references selected above, replace **LRD 3** with **LR3 D3**.
Example: **LRD 3653** becomes **LR3 D3653**.

Thermal overload relays for use on 1000 V supplies

Classes 10 A *(1)* **for connection by screw clamp terminals**

For relays LRD 06 to LRD 35 only, for an operating voltage of 1000 V, and only for independent mounting, the reference becomes **LRD 33●●A66**.
Example: **LRD 12** becomes **LRD 3312A66**.
Order an **LA7 D3064** terminal block separately, see page 6/25.

(1) Standard IEC 60947-4-1 specifies a tripping time for 7.2 times the setting current I_R:
class 10 A: between 2 and 10 seconds
*(2) BTR screws: hexagon socket head. In accordance with local electrical wiring regulations, a size 4 insulated Allen key must be used (reference **LAD ALLEN4**, see page 5/85).*

526205

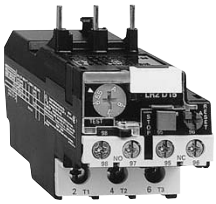

LRD 15●●

526201

LRD 3●●L

526206

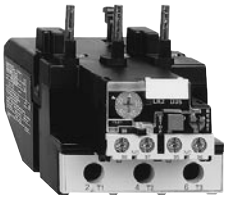

LR2 D35●●

Differential thermal overload relays

for use with fuses or magnetic circuit-breakers GV2 L and GV3 L

- Compensated relays with manual or automatic reset,
- with relay trip indicator,
- for a.c. or d.c.

Relay setting range (A)	Fuses to be used with selected relay			For use with contactor LC1	Reference	Weight kg
	aM (A)	gG (A)	BS88 (A)			
Classes 20 *(1)* **for connection by screw clamp terminals**						
2.5…4	6	10	16	D09…D32	**LRD 1508**	0.190
4…6	8	16	16	D09…D32	**LRD 1510**	0.190
5.5…8	12	20	20	D09…D32	**LRD 1512**	0.190
7…10	16	20	25	D09…D32	**LRD 1514**	0.190
9…13	16	25	25	D12…D32	**LRD 1516**	0.190
12…18	25	35	40	D18…D32	**LRD 1521**	0.190
17…25	32	50	50	D25 and D32	**LRD 1522**	0.190
23…28	40	63	63	D25 and D32	**LRD 1530**	0.190
25…32	40	63	63	D25 and D32	**LRD 1532**	0.190
Class 20 *(1)* **for connection by EverLink® BTR screw connectors** *(2)*						
9…13	20	32	35	D40A…D65A	**LRD 313L**	0.375
12…18	25	40	40	D40A…D65A	**LRD 318L**	0.375
17…25	32	50	50	D40A…D65A	**LRD 325L**	0.375
23…32	40	63	63	D40A…D65A	**LRD 332L**	0.375
30…40	50	80	80	D40A…D65A	**LRD 340L**	0.375
37…50	63	100	100	D40A…D65A	**LRD 350L**	0.375
48…65	80	125	125	D50A and D65A	**LRD 365L**	0.375
Classes 20 *(1)* **for connection by screw clamp terminals**						
17…25	32	50	50	D80 and D95	**LR2 D3522**	0.535
23…32	40	63	63	D80 and D95	**LR2 D3553**	0.535
30…40	40	100	80	D80 and D95	**LR2 D3555**	0.535
37…50	63	100	100	D80 and D95	**LR2 D3557**	0.535
48…65	80	125	100	D80 and D95	**LR2 D3559**	0.535
55…70	100	125	125	D80 and D95	**LR2 D3561**	0.535
63…80	100	160	125	D80 and D95	**LR2 D3563**	0.535

(1) Standard IEC 60947-4-1 specifies a tripping time for 7.2 times the setting current I_R:
class 20: between 6 and 20 seconds
*(2) BTR screws: hexagon socket head. In accordance with local electrical wiring regulations, a size 4 insulated Allen key must be used (reference **LAD ALLEN4**, see page 5/85).*

Differential thermal overload relays

for use with fuses or magnetic circuit-breakers NSX

- Compensated relays, with relay trip indicator,
- for a.c.,
- for direct mounting on contactor or independent mounting*(1)*.

Relay setting range (A)	Fuses to be used with selected relay		For mounting beneath contactor LC1	Reference	Weight kg
	aM (A)	gG (A)			
Classes 10 or 10A *(2)* **for connection using bars or connectors**					
60…100	100	160	D115 and D150	**LR9 D5367**	0.885
90…150	160	250	D115 and D150	**LR9 D5369**	0.885
Classes 20 *(2)* **for connection using bars or connectors**					
60…100	125	160	D115 and D150	**LR9 D5567**	0.885
90…150	200	250	D115 and D150	**LR9 D5569**	0.885

Electronic thermal overload relays for use with balanced or unbalanced loads

- Compensated relays,
- with separate outputs for alarm and tripping.

Relay setting range (A)	Fuses to be used with selected relay		For mounting beneath contactor LC1	Reference	Weight kg
	aM (A)	gG (A)			
Classes 10 or 20 *(2)* **selectable, for connection using bars or connectors**					
60…100	100	160	D115 and D150	**LR9 D67**	0.900
90…150	160	250	D115 and D150	**LR9 D69**	0.900

(1) Power terminals can be protected against direct finger contact by the addition of shrouds and/or insulated terminal blocks, to be ordered separately (see page 5/84).
(2) Standard IEC 60947-4-1 specifies a tripping time for 7.2 times the setting current I_R:
class 10: between 4 and 10 seconds,
class 10 A: between 2 and 10 seconds,
class 20 A: between 6 and 20 seconds

Other versions

Thermal overload relays for resistive circuits in category AC-1.
Please consult your Regional Sales Office.

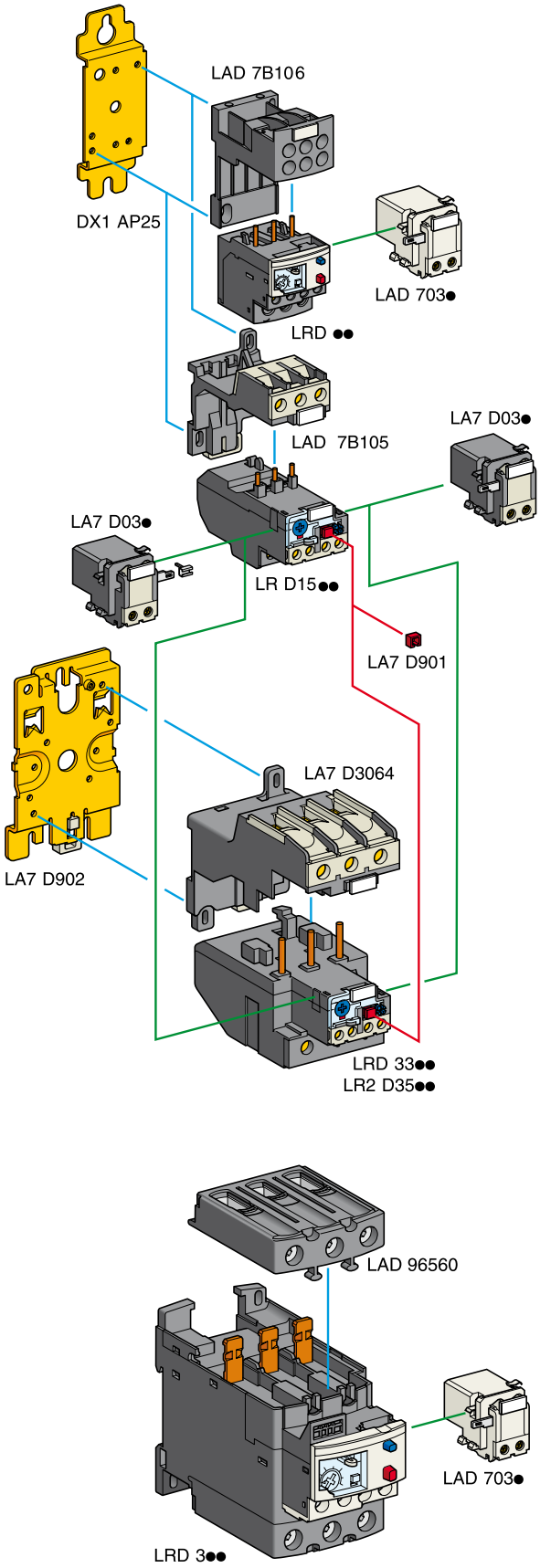
LAD 7B106
DX1 AP25
LAD 703●
LRD ●●
LAD 7B105
LA7 D03●
LA7 D03●
LR D15●●
LA7 D901
LA7 D3064
LA7 D902
LRD 33●●
LR2 D35●●
LAD 96560
LAD 703●
LRD 3●●

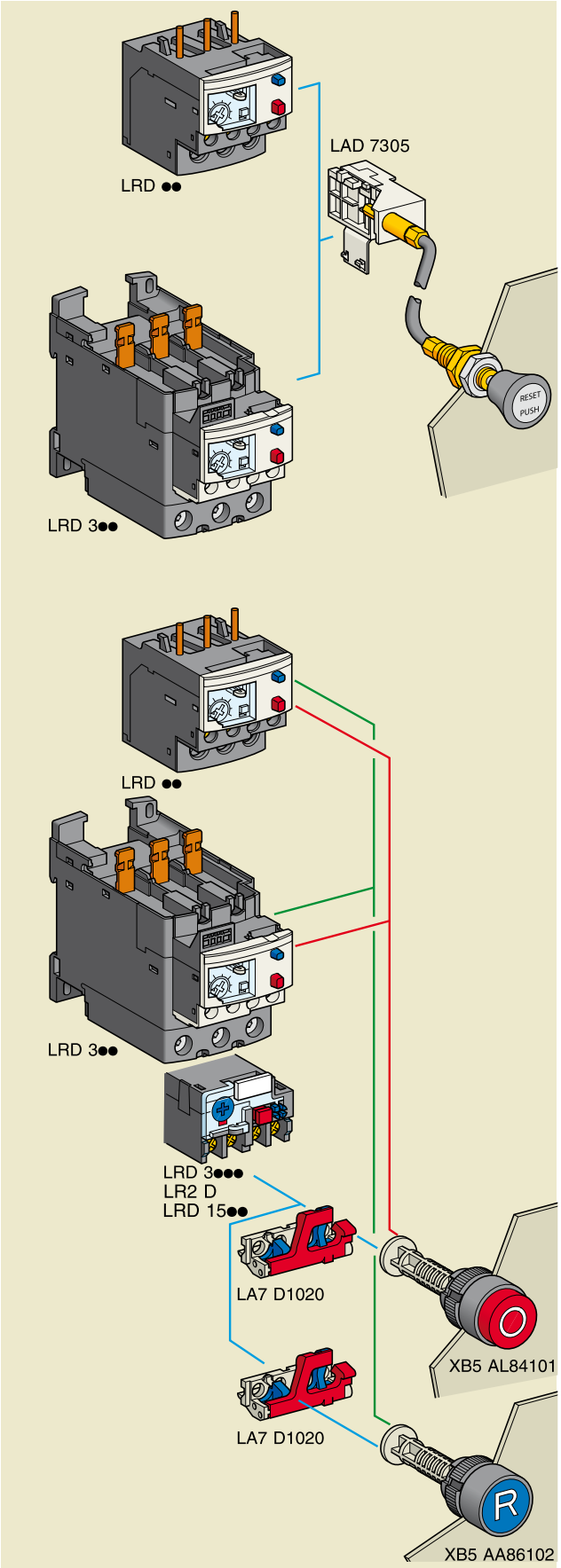
LRD ●●
LAD 7305
LRD 3●●
RESET
PUSH
LRD ●●
LRD 3●●
LRD 3●●●
LR2 D
LRD 15●●
LA7 D1020
XB5 AL84101
LA7 D1020
R
XB5 AA86102

6

TeSys protection components

TeSys D, 3-pole thermal overload relays

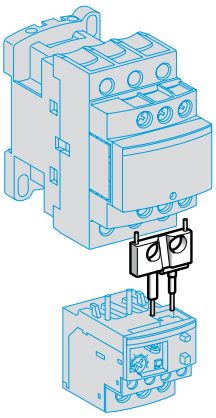

LAD 7C●

Separate components for relays

Description	For use with	Sold in lots of	Unit reference	Weight kg
Pre-wiring kit allowing direct connection of the N/C contact of relay LRD 01…35 or LR3 D01…D35 to the contactor	LC1 D09…D18	10	**LAD 7C1** *(1)*	0.002
	LC1 D25…D38	10	**LAD 7C2** *(1)*	0.003
Terminal block *(2)* for clip-on mounting on 35 mm rail (AM1 DP200) or screw fixing; for fixing centres, see pages 6/26 to 6/28	LRD 01…35 and LR3 D01…D35	1	**LAD 7B106**	0.100
	LRD 1508…32	1	**LAD 7B105**	0.100
	LRD 33●●●, LR3 D33●●●, LR2 D35●●	1	**LA7 D3064** *(3)*	0.370
EverLink® terminal block for independent mounting	LRD 3●●, LRD 3●●L and LR3 D3●●	1	**LAD 96560**	0.087
Size 4 Allen key, insulated , 1000 V	LRD 3●●, LRD 3●●L and LR3 D3●●	5	**LAD ALLEN4**	0.026
Terminal block adapter for mounting a relay beneath an LC1 D115 or D150 contactor	LRD 3●●, LR3 D3●●●, LRD 35●●	1	**LA7 D3058** *(3)*	0.080
Mounting plates *(4)* for screw fixing on 110 mm centres	LRD 01…35, LR3 D01…D35, LRD 1508…32	10	**DX1 AP25**	0.065
	LRD 3●●●, LR3 D3●●●, LR2 D35●●	1	**LA7 D902**	0.130
Marker holders, snap-in 8 x 18 mm	LRD 3●●	100	**LAD 90**	0.001
	All relays except LRD 01…35, LR3 D01…D35, LRD 3●●, LRD 3●●L and LR3 D3●●	100	**LA7 D903**	0.001
Bag of 400 blank legends (self-adhesive, 7 x 16 mm)	All relays	1	**LA9 D91**	0.001
Stop button locking device	All relays except LRD 01…35, LR3 D01…D35, LR9 D and LRD 313…LRD 365	10	**LA7 D901**	0.005
Remote Stop or electrical reset device *(5)*	LRD 01…35, LR3 D01…D35 and LRD 313…LRD 365	1	**LAD 703●** *(6) (7)*	0.090
Remote tripping or electrical reset device *(5)*	All relays except LRD 01…35, LR3 D01…D35, LRD 3●●, LRD 3●●L and LR3 D3●●	1	**LA7 D03●** *(6)*	0.090
Block of insulated terminals	LR9 D	2	**LA9 F103**	0.560
IP 20 cover for lug type terminals for independent mounting	LRD 3136…3656	1	**LAD 96570**	0.021
IP 20 cover for lug type terminals for mounting with contactor LC1 D40A6…D65A6	LRD 3136…3656	1	**LAD 96575**	0.010
Terminal block for lug type terminals for independent mounting	LRD 3136…3656	1	**LAD 96566**	0.010

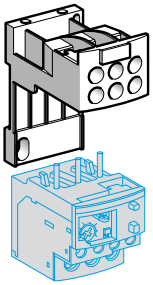

LAD 7B106

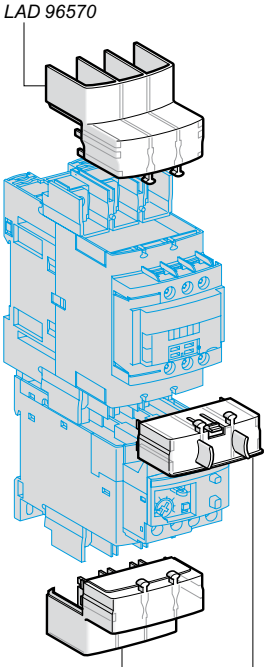

LAD 96570

LAD 96570 LAD 96575

Remote control

"Reset" function

Description	For use with	Sold in lots of	Unit reference	Weight kg
By flexible cable (length = 0.5 m)	LRD 01…35, LR3 D01…D35 and LRD 313…LRD 365	1	**LAD 7305** *(7)*	0.075
	All relays except LRD 01…35, LR3 D01…D35, LRD 3●●, LRD 3●●L and LR3 D3●●	1	**LA7 D305**	0.075

"Stop" and/or "Reset" functions

The terminal protection shroud must be removed and the following 3 products must be ordered separately:

Adapter for door mounting	LRD 33●●, LR2 D and LRD 15●●.		1	**LA7 D1020**	0.005
Operating heads for spring return pushbutton	Stop	All relays	1	**XB5 AL84101**	0.027
	Reset	All relays	1	**XB5 AA86102**	0.027

(1) These pre-wiring kits cannot be used with reversing contactors.
(2) Terminal blocks are supplied with terminals protected against direct finger contact and screws in the open, "ready-to-tighten" position.
*(3) To order a terminal block for connection by lugs, the reference becomes **LA7 D30646**.*
(4) Remember to order the terminal block corresponding to the type of relay.
*(5) The time for which the coil of remote tripping or electrical resetting device **LA7 D03** or **LAD 703** can remain energised depends on its rest time: 1 s pulse duration with 9 s rest time; 5 s pulse duration with 30 s rest time; 10 s pulse duration with 90 s rest time; maximum pulse duration 20 s with a rest time of 300 s. Minimum pulse time: 200 ms.*
(6) Reference to be completed by adding the code indicating the control circuit voltage.
Standard control circuit voltages (for other voltages, please consult your Regional Sales Office) :

Volts	12	24	48	96	110	220/230	380/400	415/440
50/60 Hz	–	B	E	–	F	M	Q	N
Consumption, inrush and sealed: < 100 VA								
---	J	B	E	DD	F	M	–	–
Consumption, inrush and sealed: < 100 W.								

(7) Not compatible with 3-pole relays fitted with spring terminals.

6

LRD 01…35

Direct mounting beneath contactors with screw clamp connections

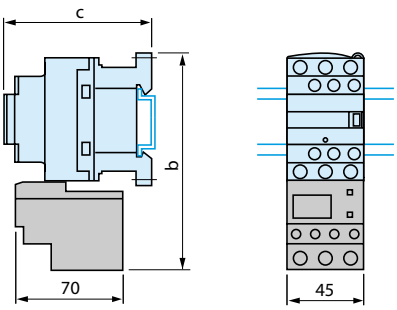

LC1	D09…D18	D25…D38
b	123	137
c	See pages 5/92 and 5/93	

LRD 1508…32

Direct mounting beneath contactors with screw clamp connections

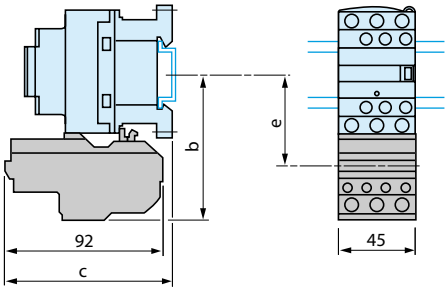

LC1	∼ D09… D18	∼ D25… D38	⎓ D09… D18	⎓ D25… D38
b	90	97	90	97
c	97	96	107	106
e	53	60	53	60

LRD 013…223

Direct mounting beneath contactors with spring terminal connections

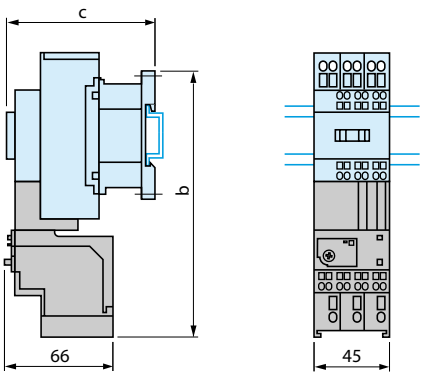

LC1	D093…D253
b	168
c	See pages 5/92 and 5/93

LRD 313 …365

Direct mounting beneath contactors LC1 D40A…D65A with screw clamp connections or EverLink® connectors

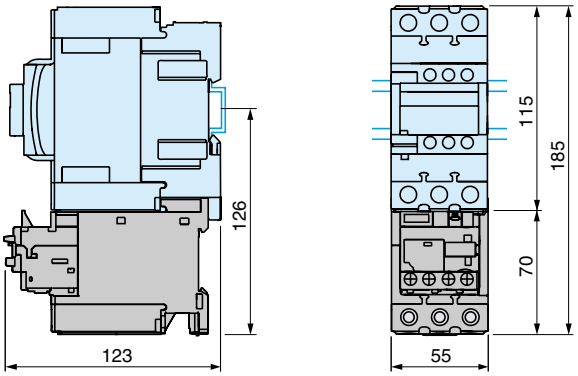

LRD 3136 …3656

Direct mounting beneath contactors LC1 D40A6…D65A6 with lugs

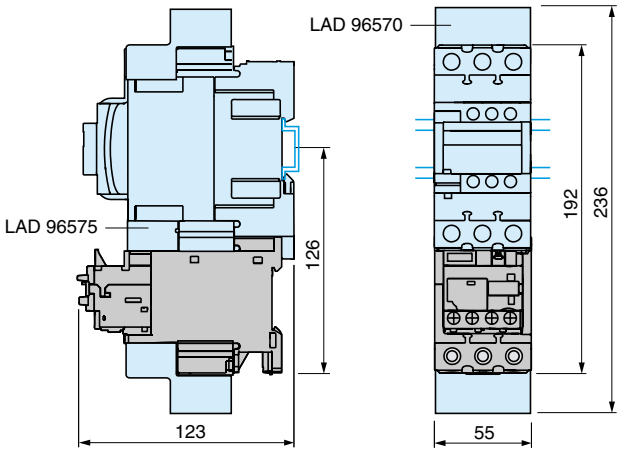

6

LRD 4●●●

Direct mounting beneath contactors LC 1D115 and D150

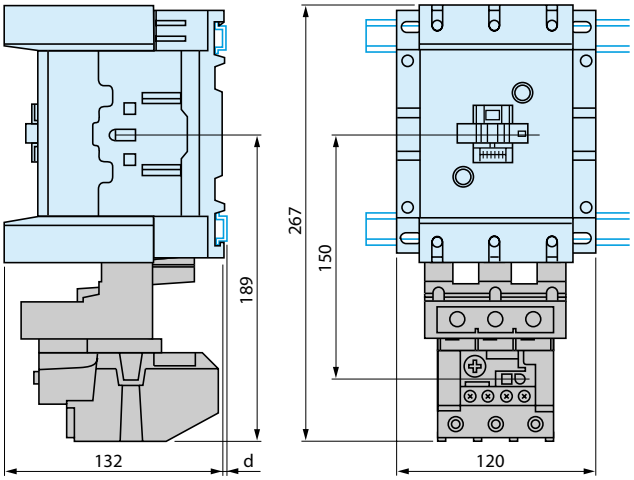

AM1	DL200 and DR200	DE200 and ED●●●
d	2.5	10.5

LR9 D

Direct mounting beneath contactors LC 1D115 and D150

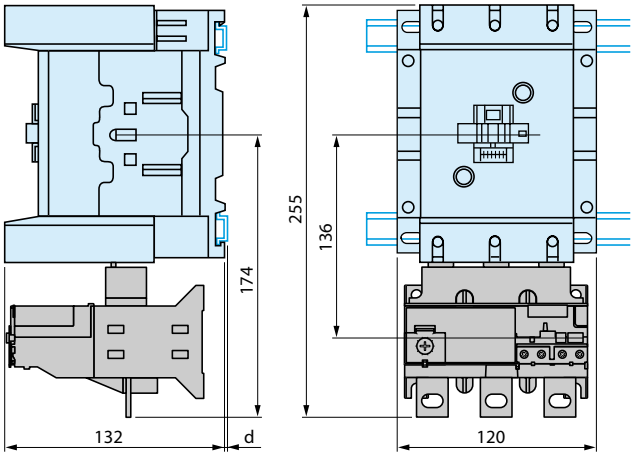

AM1	DP200 and DR200	DE200 and ED●●●
d	2.5	10.5

LRD 01…35

Independent mounting on 50 mm centres or on rail AM1 DP200 or DE200

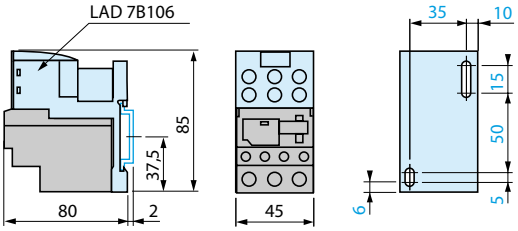

Independent mounting on 110 mm centres

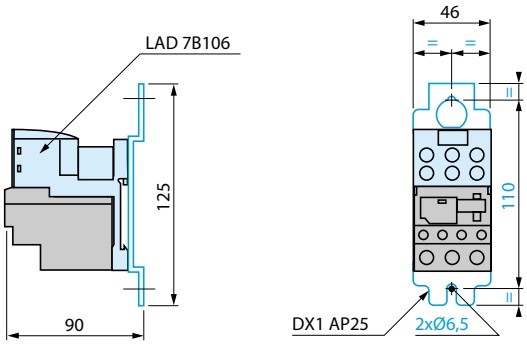

LRD 313 …365

Mounting on rail AM1 D●200 or ED200

With terminal block LAD 96560

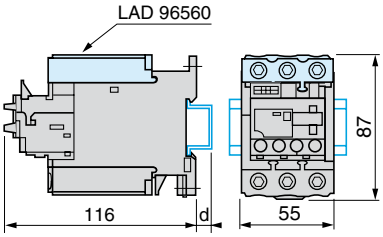

AM1	DP200	DE200	ED200
d	2	9.5	9.5

Panel mounting

Outgoing terminal block not shown

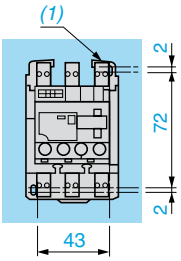

(1) 2 elongated holes Ø 4.2 x 6.

Mounted on plate AM1 P

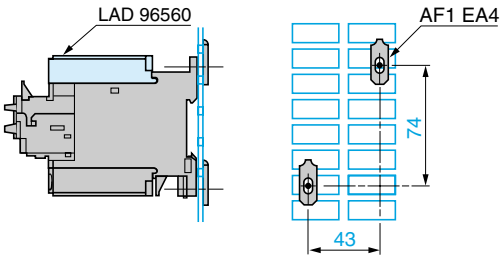

LRD 01…35 and LRD 313…365

Remote tripping or electrical reset

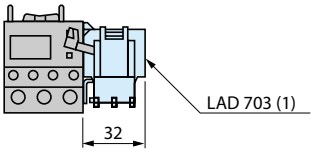

(1) Can only be mounted on RH side of relay LRD01…35 and LRD313…365

Characteristics : pages 6/14 to 6/17
References : pages 6/20 to 6/22
Schemes : page 6/29

LRD 15●●

Independent mounting on 50 mm centres or on rail AM1 DP200 or DE200

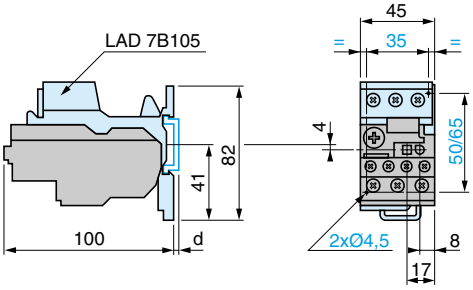

AM1	DP200	DE200
d	2	9.5

Remote tripping or electrical reset

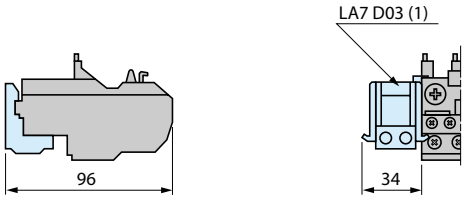

(1) Can be mounted on RH or LH side of relay LR2 D15.

LRD 3●●● and LR2 D35●●

Independent mounting on 50 mm centres or on rail AM1 DP200 or DE200

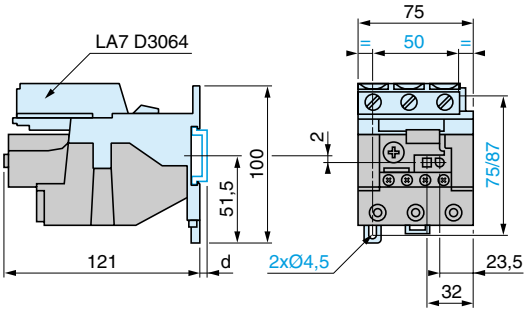

AM1	DP200	DE200
d	2	9.5

LRD 3●●●, LR2 D35●● and LR9 D

Remote tripping or electrical reset

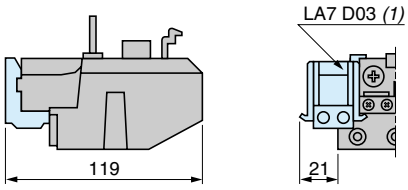

(1) Can be mounted on RH or LH side of relay LRD 3●●●, LR2 D35●● or LR9 D.

6

LRD 15 and LRD 3●●●

Adapter for door mounted operator

LA7 D1020

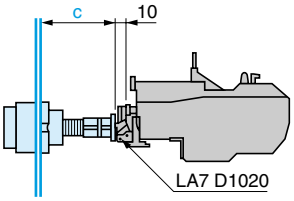

c : adjustable from 17 to 120 mm

Stop

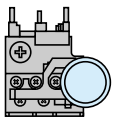

Reset

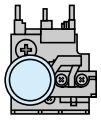

LRD, LRD 313…365, LRD 15 and LR9 D

"Reset" by flexible cable

LA7 D305 and LAD 7305
Mounting with cable straight

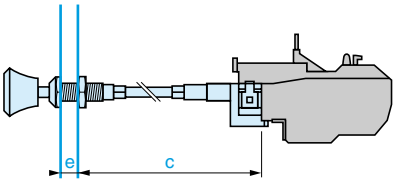

e : up to 20 mm
c : up to 550 mm

Mounting with cable bent

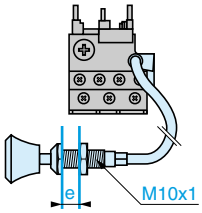

e : up to 20 mm

Characteristics : pages 6/14 to 6/17
References : pages6/20 to 6/22
Schemes : page 6/29

LRD ●●, LRD 3●● and LR2 D●●

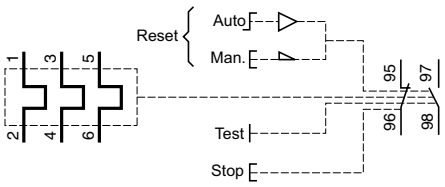

Pre-wiring kit LAD 7C1, LAD 7C2

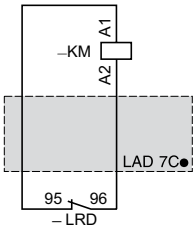

LR9 D5●●●

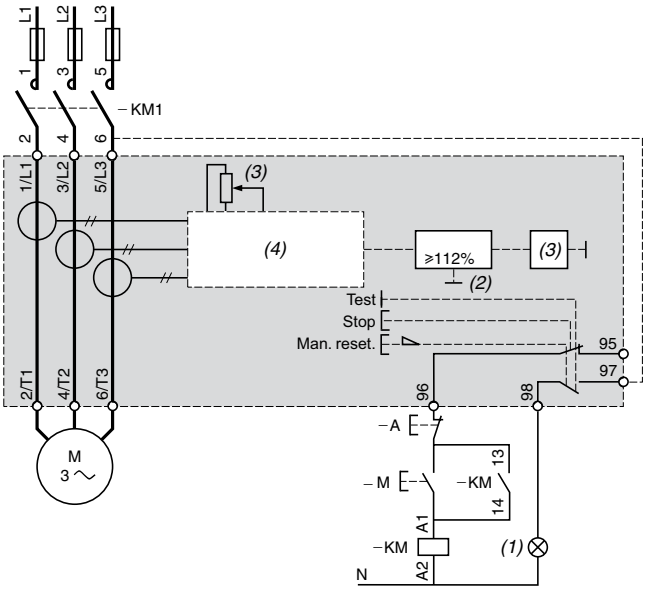

(1) Tripped.
(2) Overload.
(3) Setting current.
(4) Specialised circuit.

LR9 D67 and LR9 D69

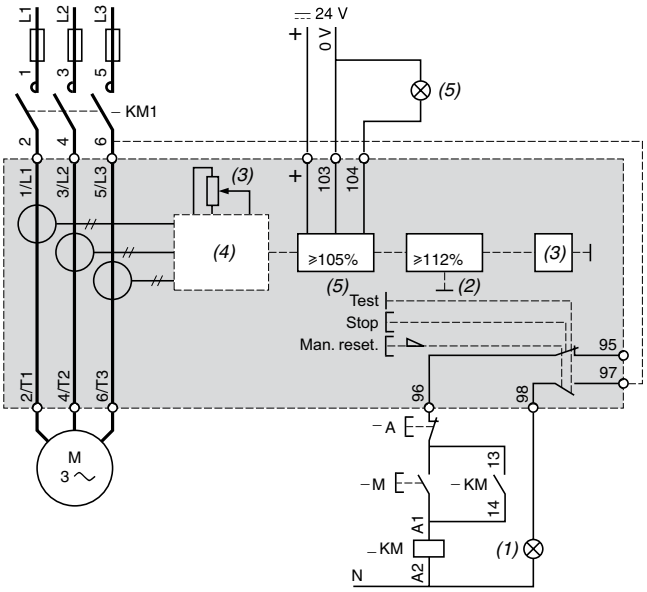

(1) Tripped.
(2) Overload.
(3) Setting current.
(4) Specialised circuit.
(5) Alarm.

Characteristics : pages 6/14 to 6/17
References : pages 6/20 to 6/22
Dimensions : pages 6/26 to 6/28

TeSys protection components

3-pole electronic thermal overload relays, TeSys LR9 F

Presentation

TeSys LR9 F electronic protection relays are especially suited to the operating conditions of motors.
They provide protection against:
- thermal overload of 3-phase or single-phase balanced or unbalanced circuits;
- phase failure and large phase unbalance,
- protracted starting times,
- prolonged stalled rotor condition.

LR9 F electronic protection relays are mounted directly below an LC1 F type contactor. They cover a range from 30 to 630 A, in eight ratings.
The settings can be locked by sealing the transparent protective cover.
A reset button is mounted on the front of the relay.
Two versions are available:
- simplified version: class 10: LR9 F●3●●, class 20: LR9 F●5●●,
- complete version: class 10, 10 A or class 20, selectable, conforming to EN 60947-4-1: LR9 F●●.

This latter version includes an alarm function which makes it possible to forestall tripping by load shedding.

Simplified version: class 10 or 20

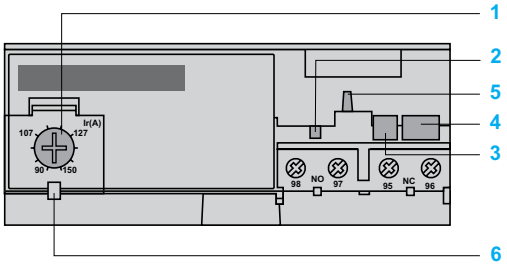

Complete version: class 10, 10 A or class 20, selectable, and alarm circuit

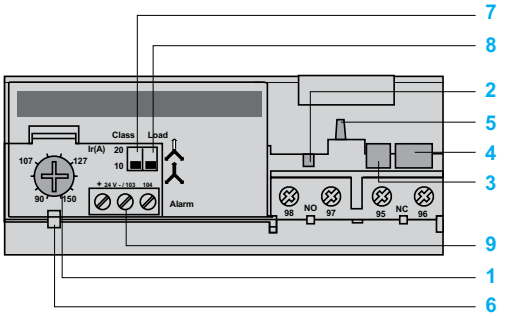

1 Ir adjustment dial
2 Test button
3 Stop button
4 Reset button
5 Trip indicator
6 Setting locked by sealing the cover
7 Class 10/class 20 selector switch
8 Selector switch for balanced load /unbalanced load
9 Alarm circuit

Characteristics : pages 6/31 to 6/33
References : pages 6/34 to 6/37
Dimensions, schemes : pages 6/38 and 6/39

Environment

Conforming to standards			IEC 60947-4-1, IEC 60255-8, IEC 60255-17, EN 60947-4-1 and VDE 0660
Product certifications			UL 508, CSA 22-2
Degree of protection	Conforming to VDE 0106		IP 20
	Conforming to IEC 60529		IP 20 on front of relay with accessories **LA9 F103** or **LA7 F70●**, see page 6/37
Protective treatment	Standard version		"TH"
Ambient air temperature around the device (conforming to IEC 60255-8)	Storage	**°C**	- 40…+ 85
	Normal operation	**°C**	- 20…+ 55 *(1)*
Maximum operating altitude	Without derating	**m**	2000
Operating positions without derating	In relation to normal vertical mounting plane		Any position
Shock resistance	Permissible acceleration conforming to IEC 60068-2-7		13 gn - 11 ms
Vibration resistance	Permissible acceleration conforming to IEC 60068-2-6		2 gn - 5 to 300 Hz
Dielectric strength at 50 Hz	Conforming to IEC 255-5	**kV**	6
Surge withstand	Conforming to IEC 61000-4-5	**kV**	4
Resistance to electrostatic discharge	Conforming to IEC 61000-4-2	**kV**	8 (in air) 6 (in indirect mode)
Resistance to radiated radio-frequency disturbance	Conforming to IEC 61000-4-3	**V/m**	10
Resistance to fast transient currents	Conforming to IEC 61000-4-4	**kV**	2
Electromagnetic compatibility	EN 50081-1 and 2, EN 50082-2		Conforming

(1) For operating temperatures up to 70 °C, please consult your Regional Sales Office.

TeSys protection components

3-pole electronic thermal overload relays, TeSys LR9 F

Electrical characteristics of power circuit

Relay type		LR9	F5●57, F57	F5●63, F63 F5●67, F67 F5●69, F69	F5●71, F71	F7●75, F75 F7●79, F79	F7●81, F81
Rated insulation voltage (Ui)	Conforming to IEC 60947-4	**V**	1000				
Rated operational voltage (Ue)	Conforming to VDE 0110 gr C	**V**	1000				
Rated impulse withstand voltage (Uimp)	Conforming to IEC 60947-1	**kV**	8				
Rated operational current (Ie)		**A**	30 to 630				
Short-circuit protection and coordination			See pages: 1/18, 1/19, 1/30 and 1/31				
Frequency limits	Of the operating current	**Hz**	50…60. For other frequencies, please consult your Regional Sales Office *(1)*				
Power circuit connections	Width of terminal lug	**mm**	20	25	25	30 **LR9 F7●75** and **LR9 F75** 40 **LR9 F7●79** and **LR9 F79**	40
	Clamping screw		M6	M8	M10	M10	M12
	Tightening torque	**N.m**	10	18	35	35	58

Auxiliary contact electrical characteristics

Conventional thermal current			**A**	5				
Short-circuit protection	By gG or BS fuses or by circuit-breaker **GB2 CD10**		**A**	5				
Control circuit connections	Flexible cable with cable end			**Min.**			**Max.**	
		1 conductor	**mm²**	1 x 0.75			1 x 2.5	
		2 conductors	**mm²**	2 x 1			2 x 1.5	
	Flexible cable without cable end	1 conductor	**mm²**	1 x 0.75			1 x 4	
		2 conductors	**mm²**	2 x 1			2 x 2.5	
	Solid cable	1 conductor	**mm²**	1 x 0.75			1 x 2.5	
		2 conductors	**mm²**	2 x 1			–	
	Tightening torque		**N.m**	1.2				
Maximum sealed current consumption of the coils of associated contactors (occasional operating cycles of contact 95-96)	a.c. supply		**V**	24	48	110	220	380	600
			VA	100	200	400	600	600	600
	d.c. supply		**V**	24	48	110	220	440	–
			W	100	100	50	45	25	–

(1) For applications involving the use of these overload relays with soft starters or variable speed drives, please consult your Regional Sales Office.

TeSys protection components

3-pole electronic thermal overload relays, TeSys LR9 F

Operating characteristics				
Tripping class	Conforming to IEC 60947-4-1			10, 10 A and 20
Temperature compensation			**°C**	- 20…+ 70
Reset				Manual on front of relay
Fault indication				On front of relay
Test function				On front of relay
Stop function				Actuation of N/C contact, without affecting N/O contact
Tripping thresholds	Conforming to IEC 60947-4-1	Alarm	**A**	1.05 ± 0.06 In
		Tripping	**A**	1.12 ± 0.06 In
Sensitivity to phase failure	Conforming to IEC 60947-4-1			Tripping in 4 s ± 20 % in the event of phase failure
Adjustment (nominal motor current)				Setting dial on front of relay
Security sealing				Yes

Alarm circuit characteristics			
Rated supply voltage	d.c. supply	**V**	24
Supply voltage limits		**V**	17…32
Current consumption	No-load	**mA**	≤ 5
Switching current		**mA**	0…150
Protection	Short-circuit and overload		Auto-protected
Voltage drop	Closed state	**V**	≤ 2.5
Connection	Flexible cable without cable end	**mm²**	0.5…1.5
Tightening torque		**N.m**	0.45

LR9 F tripping curve

Average operating times depending on multiples of the setting current

Class 10

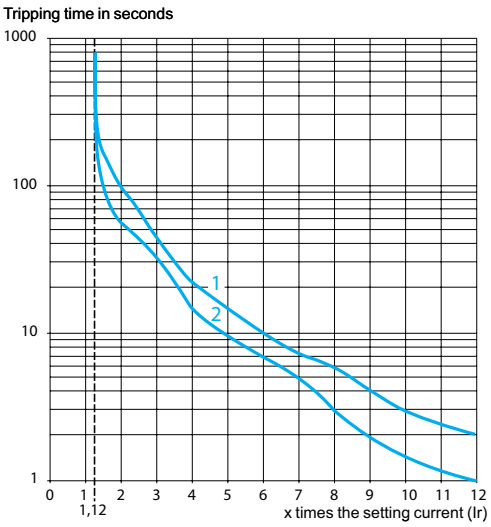

Class 20

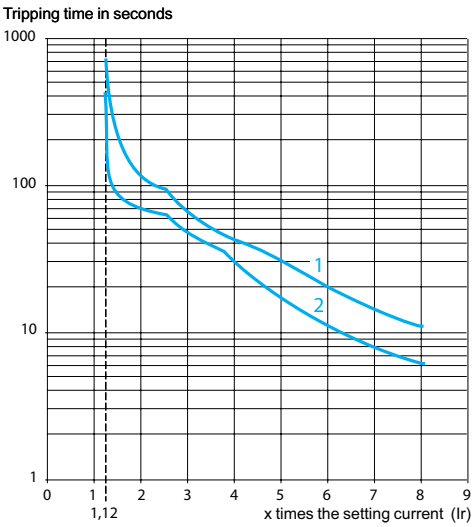

1 Cold state curve
2 Hot state curve

Presentation : page 6/30
References : pages 6/34 to 6/37
Dimensions, schemes : pages 6/38 and 6/39

TeSys protection components

3-pole electronic thermal overload relays, TeSys LR9 F for motor protection

819555

LR9 F53●●

819556

LR9 F73●●

Compensated and differential overload relays

Thermal overload relays:
- compensated and differential,
- with relay trip indicator,
- for a.c.,
- for direct mounting on contactor or independent mounting *(1)*.

Relay setting range	Fuses to be used with selected relay		For direct mounting beneath contactor LC1	Reference	Weight
	aM	gG			
A	A	A			kg
Class 10 *(2)*					
30…50	50	80	F115…F185	**LR9 F5357**	0.885
48…80	80	125	F115…F185	**LR9 F5363**	0.900
60…100	100	200	F115…F185	**LR9 F5367**	0.900
90…150	160	250	F115…F185	**LR9 F5369**	0.885
132…220	250	315	F185…F400	**LR9 F5371**	0.950
200…330	400	500	F225…F500	**LR9 F7375**	2.320
300…500	500	800	F225…F500	**LR9 F7379**	2.320
380…630	630	800	F400…F630 and F800	**LR9 F7381**	4.160
Class 20 *(2)*					
30…50	50	80	F115…F185	**LR9 F5557**	0.885
48…80	80	125	F115…F185	**LR9 F5563**	0.900
60…100	100	200	F115…F185	**LR9 F5567**	0.900
90…150	160	250	F115…F185	**LR9 F5569**	0.885
132…220	250	315	F185…F400	**LR9 F5571**	0.950
200…330	400	500	F225…F500	**LR9 F7575**	2.320
300…500	500	800	F225…F500	**LR9 F7579**	2.320
380…630	630	800	F400…F630 and F800	**LR9 F7581**	4.160

*(1) When mounting overload relays up to size **LR9 F5371** directly beneath the contactor, they may be additionally supported by a mounting plate (see page 6/37). Above this size it is always necessary to use the mounting plate.*
Power terminals can be protected against direct finger contact by the addition of shrouds and/or insulated terminal blocks, to be ordered separately (see page 6/37).
(2) Standard IEC 60947-4 specifies a tripping time for 7.2 times the setting current In:
- class 10: between 4 and 10 seconds,
- class 20: between 6 and 20 seconds.

Presentation : page 6/30
Characteristics : pages 6/31 to 6/33
Dimensions, schemes : pages 6/38 and 6/39

Schneider Electric

TeSys protection components

3-pole electronic thermal overload relays, TeSys LR9 F for motor protection

819557

LR9 F57

Compensated overload relays, class 10 or 20 with alarm

Thermal overload relays:
- compensated,
- with relay trip indicator,
- for a.c.,
- for direct mounting on contactor or independent mounting *(1)*,
- class 10 or 20 by selector switch,
- protection of 3-phase or single-phase circuits by selector switch,
- with alarm function that enables tripping to be forestalled.

Relay setting range	Fuses to be used with selected relay		For direct mounting beneath contactor LC1	Reference	Weight
	aM	gG			
A	A	A			kg
30…50	50	80	F115…F185	**LR9 F57**	0.885
48…80	80	125	F115…F185	**LR9 F63**	0.900
60…100	100	200	F115…F185	**LR9 F67**	0.900
90…150	160	250	F115…F185	**LR9 F69**	0.885
132…220	250	315	F185…F400	**LR9 F71**	0.950
200…330	400	500	F225…F500	**LR9 F75**	2.320
300…500	500	800	F225…F500	**LR9 F79**	2.320
380…630	630	800	F400…F630 and F800	**LR9 F81**	4.160

*(1) When mounting overload relays up to size **LR9 F71** directly beneath the contactor, they may be additionally supported by a mounting plate (see page 6/37). Above this size it is always necessary to use the mounting plate.*
Power terminals can be protected against direct finger contact by the addition of shrouds and/or insulated terminal blocks, to be ordered separately (see page 6/37).

Presentation : page 6/30
Characteristics : pages 6/31 to 6/33
Dimensions, schemes : pages 6/38 and 6/39

TeSys protection components

3-pole electronic thermal overload relays, TeSys LR9 F

Accessories (to be ordered separately)

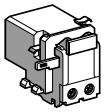

LA7 D03●

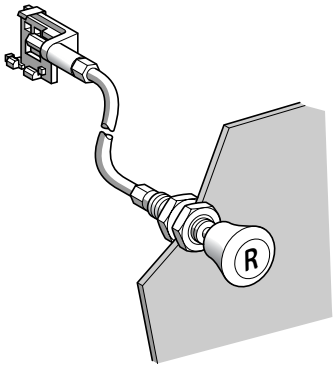

LA7 D305

Control accessories

Description		Sold in lots of	Unit reference	Weight kg
Remote electrical reset device *(1)*		1	**LA7 D03●** *(2)*	0.090
Remote Reset function control by flexible cable (length = 0.5 m)		1	**LA7 D305**	0.075
Remote Stop and/or Reset function control	Adapter for door mounted operator	1	**LA7 D1020**	0.005
	Rod (snap-off end to obtain required length, between 17 and 120 mm)	10	**ZA2 BZ13**	0.100
	Operating head for spring return pushbutton	1	**ZA2 B●●●●** *(3)*	0.012

Connection accessories

For mounting an LR9 F5●71 thermal overload relay together with an LC1 F185 contactor

Description	Reference	Weight kg
Set of 3 busbars	**LA7 F407**	0.160

For mounting a thermal overload relay beneath a reversing contactor or star-delta contactors

Application		Width of terminal lug	Set of 3 busbars Reference	Weight
For relay	For contactor			
		mm		kg
LR9 F5●57, F5●63, F5●67, F5●69, F69, F71	LC1 F115	15	**LA7 F401**	0.110
LR9 F5●57, F5●63	LC1 F150, F185	20	**LA7 F402**	0.110
LR9 F5●71, LR9 F71	LC1 F185	25	**LA7 F407**	0.160
LR9 F5●71, LR9 F71	LC1 F225, F265	25	**LA7 F403**	0.160
LR9 F7●75, F7●79, LR9 F75, F79	LC1 F225...F400	25	**LA7 F404**	0.160
LR9 F7●81, LR9 F81	LC1 F400	25	**LA7 F404**	0.160
LR9 F7●75, F7●79, F7●81, LR9 F75, F79, F81	LC1 F500	30	**LA7 F405**	0.270
LR9 F7●81, LR9 F81	LC1 F630, F800	40	**LA7 F406**	0.600

*(1) The time for which the coil of remote electrical reset device **LA7 D03** can remain energised depends on its rest time: 1 s pulse duration with 9 s rest time; 5 s pulse duration with 30 s rest time; 10 s pulse duration with 90 s rest time. Maximum pulse duration of 20 s with rest time of 300 s. Minimum pulse time: 200 ms.*

(2) Reference to be completed by adding the coil voltage code.
Standard control circuit voltages,
(for other voltages, please consult your Regional Sales Office):

Volts	12	24	48	96	110	220/230	380/400	415/440
∼ 50/60 Hz	–	B	E	–	F	M	Q	N
Consumption, inrush and sealed: < 100 VA								
⎓	J	B	E	DD	F	M	–	–
Consumption, inrush and sealed: < 100 W.								

*(3) Stop: **ZA2 BL432** and Reset: **ZA2 BL639**.*

Presentation : page 6/30
Characteristics : pages 6/31 to 6/33
Dimensions, schemes : pages 6/38 and 6/39

TeSys protection components

3-pole electronic thermal overload relays, TeSys LR9 F

Accessories (to be ordered separately)

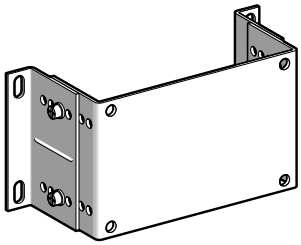

LA7 F90●

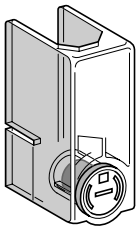

LA9 F70●

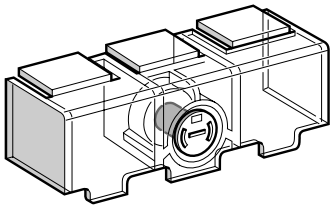

LA7 F70●

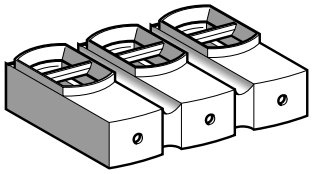

LA9 F103

Mounting plates for overload relay

For use with relays	Reference	Weight kg
LR9 F5●57, F5●63, F5●67, F5●69, F5●71, LR9 F57, F63, F67, F69, F71	**LA7 F901**	0.100
LR9 F7●75, F7●79, F7●81, LR9 F75, F79, F81	**LA7 F902**	0.100

Sets of power terminal protection shrouds, single-pole

For use with relays	Number of shrouds per set	Set reference	Weight kg
LR9 F5●57, LR9 F57	6	**LA9 F701**	0.015
LR9 F5●63, F5●67, F5●69, LR9 F63, F67, F69	6	**LA9 F702**	0.015
LR9 F5●71, LR9 F71	6	**LA9 F705**	0.015
LR9 F7●75, F7●79, F7●81, LR9 F75, F79, F81	6	**LA9 F703**	0.015

Power terminal protection shrouds, 3-pole

For use with relays	Reference	Weight kg
LR9 F5●57, F5●63, F5●67, F5●69, LR9 F57, F63, F67, F69	**LA7 F701**	0.030
LR9 F5●71, LR9 F71	**LA7 F702**	0.030
LR9 F7●75, F7●79, F7●81, LR9 F75, F79, F81	**LA7 F703**	0.030

Insulated terminal blocks

For use with relays	Set of 2 blocks Reference	Weight kg
LR9 F5●57, F5●63, F5●67, F5●69, LR9 F57, F63, F67, F69	**LA9 F103**	0.560

Marking accessories

Description	Sold in lots of	Unit reference	Weight kg
Clip-in marker holder	100	**LA7 D903**	0.001
Bag of 400 blank self-adhesive legends 7 x 16 mm	1	**LA9 D91**	0.001

6

TeSys protection components

3-pole electronic thermal overload relays, TeSys LR9 F

Common side view

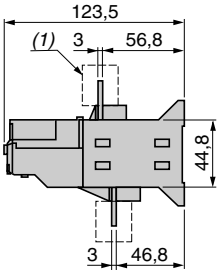

LR9 F5●71, F71

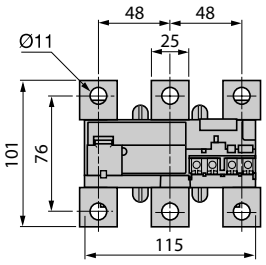

LR9 F5●57, F5●63, F5●67, LR9 F5●69, F57, F63, F67, F69

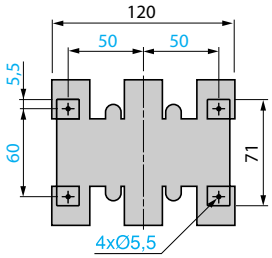

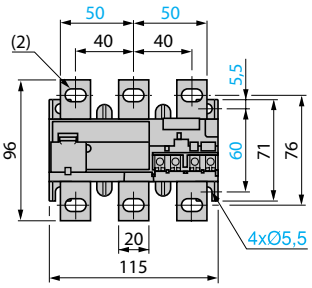

*(1) Terminal shroud **LA9 F70●***

*(2) 6.5 x 13.5 for **LR9 F5●57** and **F57**. 8.5 x 13.5 for **LR9 F5●63, F5●67, F5●69, F63, F67, F69***

Common side view

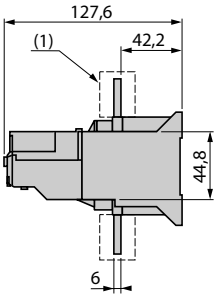

*(1) Terminal shroud **LA9 F70●***

LR9 F7●75, F7●79, F7●81, LR9 F75, F79, F81

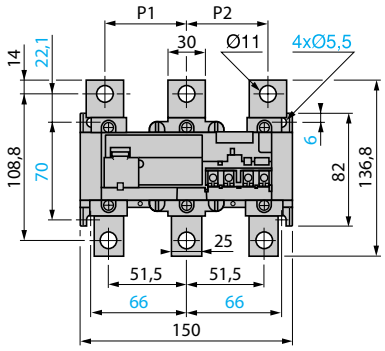

	P1	P2
LR9 F7●75, F75	48	48
LR9 F7●79, F7●81, F79, F81	55	55

LR9 F7●81 (for mounting beneath LC1 F630 and F800), LR9 F81

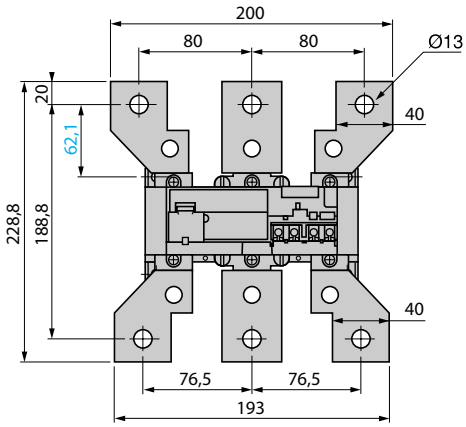

Direct mounting beneath contactor LC1 F

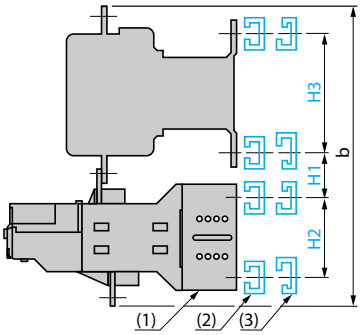

Contactors LC1	With LR9 relays	b	H1	H2	H3
F115	F5●57, F5●63, F5●67, F5●69, F57, F63, F67, F69	240	30	50	120
F150	F5●57, F5●63, F5●67, F5●69 F57, F63, F67, F69	246	30	50	120
F185	F5●57, F5●63, F5●67, F5●69 F57, F63, F67, F69	250	30	50	120
F225	F5●71, F71	273	40	50	120
	F7●75, F7●79, F75, F79	308	50	58	120
F265	F5●71, F71	279	40	50	120
	F7●75, F7●79, F75, F79	314	60	58	120
F330	F7●75, F7●79, F75, F79	317	60	58	120
F400	F7●75, F7●79, F7●81, F75, F79, F81	317	60	58	180
F500	F7●75, F7●79, F7●81, F75, F79, F81	346	70	58	180
F630, F800	F7●81, F81	510	110	58	180

*(1) Relay mounting plate **LA7 F90●**, see page 6/37*
*(2) **AM1 EC** or **AM1 DF** for **LC1 F115** to **F630** and **LC1 F800***

Mounting beneath contactors: reversing LC2 F or star-delta LC3 F

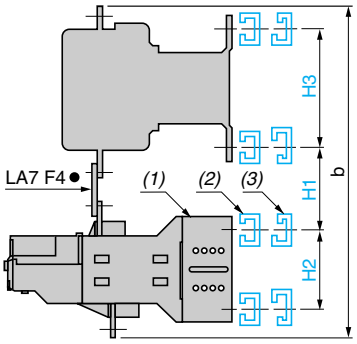

Contactors LC1	With LR9 relays	b	H1	H2	H3
F115	F5●57, F5●63, F5●67, F5●69, F57, F63, F67, F69	279	60	50	120
F150	F5●57, F5●63, F5●67, F5●69 F57, F63, F67, F69	283	60	50	120
F185	F5●57, F5●63, F5●67, F5●69 F57, F63, F67, F69	285	60	50	120
F225	F5●71, F71				
	F7●75, F7●79, F75, F79	360	100	58	120
F265	F5●71, F71	332	90	50	120
	F7●75, F7●79, F75, F79	363	100	58	120
F330	F7●75, F7●79, F75, F79	364	100	58	120
F400	F7●75, F7●79, F7●81, F75, F79, F81	364	100	58	180
F500	F7●75, F7●79, F7●81, F75, F79, F81	390	110	58	180
F630, F800	F7●81, F81	509	120	58	180

*(3) **DZ5 MB** for **LC1 F115** to **F400***

Mounting plate for LR9 F

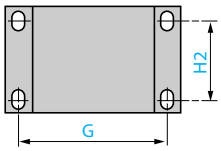

LA7	G
F901	145
F902	190

Schemes

LR9 F5●57…F7●81

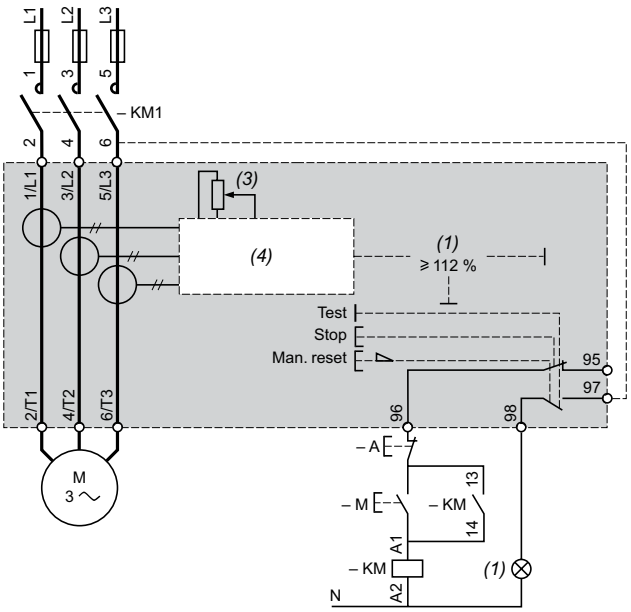

LR9 F57…F81 (with alarm)

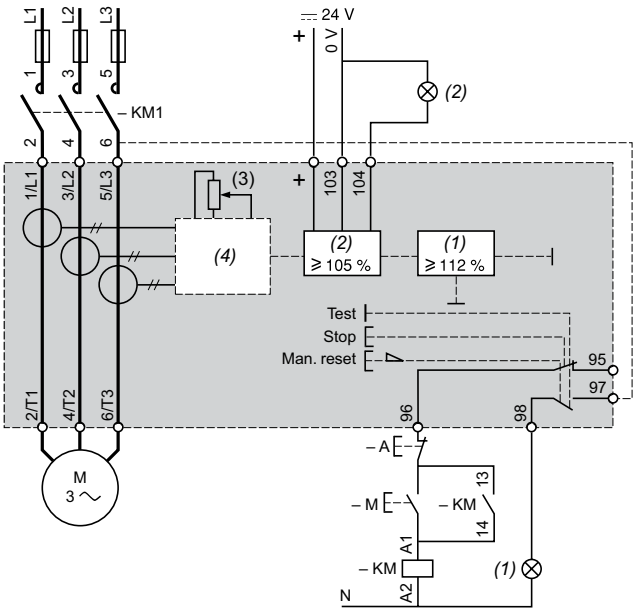

(1) Tripped on thermal overload
(2) Overheating alarm
(3) Setting current
(4) Specialised circuit

Setting-up the special functions of TeSys LR9 F thermal overload relays

Setting the relay

- Lift the transparent cover 7 to gain access to the various settings.
- Adjustment is achieved by turning dial 1 which is graduated directly in Amperes.
- The setting can be locked by sealing the cover 7.

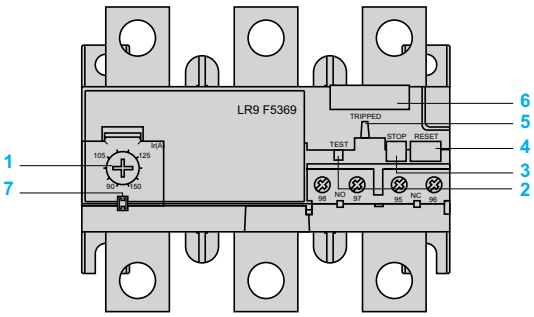

"Stop" function 3

Stop

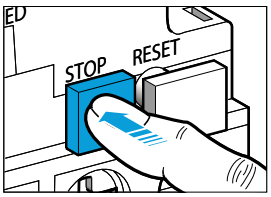

- The "Stop" function is obtained by pressing the red "STOP" button 3.
- Pressing the Test button:
  - ◻ actuates the N/C contact,
  - ◻ has no effect on the N/O contact.
- The "STOP" button can be locked by fitting a "U" clip (reference: **LA7 D901**).

"Test" function 2

Test

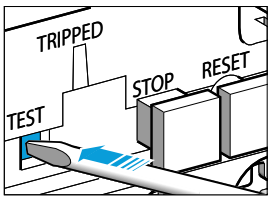

Trip indicator

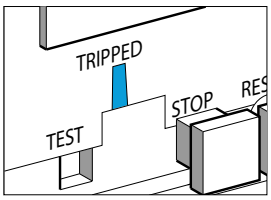

- The "Test" function is obtained by pressing the red "TEST" button 2 with a screwdriver.
- Operation of the "TEST" button simulates tripping of the relay and:
  - ◻ actuates both the N/O and N/C contacts,
  - ◻ actuates the trip indicator 5.

TeSys protection components
Single-pole magnetic over current relays

Presentation

The RM1 XA electromagnetic relay detects over current peaks in excess of the maximum permissible current value. It is designed for the protection of circuits which are not subject to current peaks (starters, resistors) or for controlling starting peaks on slip ring motors.

It trips instantaneously and is not suitable for frequent operation (12 operating cycles per hour). It can withstand a continuous current equivalent to 1.25 times the minimum setting current.

Environment characteristics

Conforming to standards		Standard version NF C 63-650, VDE 0660
Approvals		CSA
Protective treatment		Standard version “TC”, special version “TH”
Ambient air temperature around the device	**°C**	Storage: - 60…+ 70 Operation: - 40…+ 60
Maximum operating altitude	**m**	3000
Operating position		± 15° in relation to normal vertical mounting position

Electrical characteristics of power circuit

Maximum rated operational voltage	**V**	∿ or ⎓ 600
Frequency limits of the rated operational current	**Hz**	0…60

Electrical characteristics of auxiliary contacts

Conventional thermal current			**A**	10				
Occasional making and breaking capacities	a.c. supply	Voltage	**V**	48	110	220	380	600
		Power *(1)*	**VA**	4000	12 000	17 000	22 000	–
	d.c. supply	Voltage	**V**	48	110	220	440	600
		Power *(2)*	**W**	240	200	190	180	180

(1) Circuit such as the electromagnet of a contactor - cos φ inrush: 0.7 and cos φ sealed: 0.4.
(2) Circuit such as an electromagnet without economy resistor ; time constant varying from 20 ms for 5 W to 200 ms for 100 W or more.

Operating times

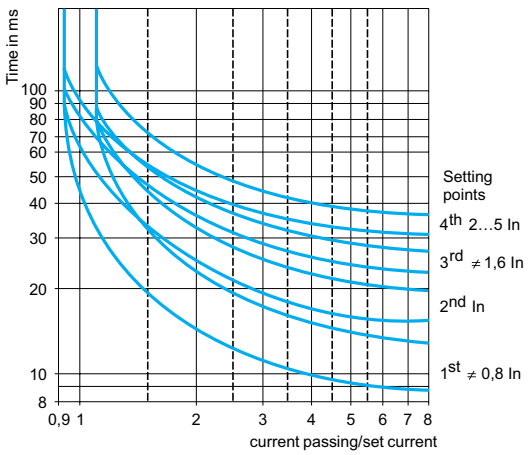

Operating times: because of the numerous applications for RM1 XA over current relays, it is not possible to give precise operating times. The curves shown are therefore purely indicative.

References: pages 6/41 and 6/42
Dimensions: page 6/43
Schemes: page 6/43

TeSys protection components
Single-pole magnetic over current relays

533558

RM1 XA001

Non-latching

With 1 C/O contact block, non-latching

	Recommanded operating range (motor In)	Setting range (trip current)	Maximum continuous current ∼ or ⎓	Reference	Weight
	A	A	A		kg
∼ or ⎓	0.7…1.15	1.25…4	1.6	**RM1 XA001**	0.990
	1.16…1.8	2…6.3	2.5	**RM1 XA002**	0.990
	1.9…2.9	3.2…10	4	**RM1 XA004**	0.990
	3…4.6	5…16	6.3	**RM1 XA006**	0.990
	4.7…7.2	8…25	10	**RM1 XA010**	0.990
	7.3…11.5	12.5…40	16	**RM1 XA016**	0.990
	11.6…18	20…63	25	**RM1 XA025**	0.990
	18.1…29	32…100	40	**RM1 XA040**	0.990
	29.1…46	50…160	63	**RM1 XA063**	0.990
	46.1…72	80…250	100	**RM1 XA100**	0.990
	73…115	125…400	160	**RM1 XA160**	0.990
	116…145	160…500	200	**RM1 XA200**	0.990
	146…230	250…800	315	**RM1 XA315**	0.990
	231…360	400 …1250	500	**RM1 XA500**	0.990
∼	361…630	630…2200	1000	**RM1 XA101**	0.990
⎓	361…570	630…2000	1000	**RM1 XA101**	0.990

Accessory (to be ordered separately)

Description	Reference	Weight kg
1 C/O contact block, non-latching	**RM1 ZG21**	0.060

6

Characteristics: page 6/40
Dimensions: page 6/43
Schemes: page 6/43

TeSys protection components
Single-pole magnetic over current relays

533559

RM1 XA0011

533560

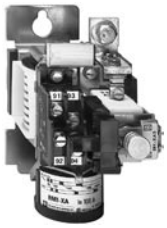

RM1 XA1001
+
ER1 XA2●

533561

RM1 XA0011
+
RM1 ZH21

Latching with manual reset

With 1 C/O contact block, latching with manual reset

	Recommanded operating range (motor In)	Setting range (trip current)	Maximum continuous current ∼ or ⎓	Reference	Weight
	A	A	A		kg
∼ or ⎓	0.7…1.15	1.25…4	1.6	**RM1 XA0011**	0.990
	1.16…1.8	2…6.3	2.5	**RM1 XA0021**	0.990
	1.9…2.9	3.2…10	4	**RM1 XA0041**	0.990
	3…4.6	5…16	6.3	**RM1 XA0061**	0.990
	4.7…7.2	8…25	10	**RM1 XA0101**	0.990
	7.3…11.5	12.5…40	16	**RM1 XA0161**	0.990
	11.6…18	20…63	25	**RM1 XA0251**	0.990
	18.1…29	32…100	40	**RM1 XA0401**	0.990
	29.1…46	50…160	63	**RM1 XA0631**	0.990
	46.1…72	80…250	100	**RM1 XA1001**	0.990
	73…115	125…400	160	**RM1 XA1601**	0.990
	116…145	160…500	200	**RM1 XA2001**	0.990
	146…230	250…800	315	**RM1 XA3151**	0.990
	231…360	400…1250	500	**RM1 XA5001**	0.990
∼	361…630	630…2200	1000	**RM1 XA1011**	0.990
⎓	361…570	630…2000	1000	**RM1 XA1011**	0.990

Accessories (to be ordered separately)

Description	Reference	Weight kg
1 C/O contact block, latching	**RM1 ZH21**	0.070
Electrical reset *(1)* (consumption: inrush, sealed: 500 VA) (fitted to the relay together with a latching contact block) Basic reference. Complete with code indicating control circuit voltage *(2)*	**ER1 XA2●**	0.240

(1) The impulse duration must not exceed 2 seconds within 10 minute intervals.
(2) Standard coil voltages for electrical reset:

Volts	24	48	110	220	380
50 Hz	B	E	F	M	Q

Characteristics: page 6/40
Dimensions: page 6/43
Schemes: page 6/43

Dimensions

RM1 XA●●●, RM1 XA●●●1	RM1 XA001…XA040 RM1 XA0011…XA0401	RM1 XA063, XA100 and XA315 RM1 XA0631, XA1001 and XA3151	RM1 XA160, XA200, and XA500 RM1 XA1601, XA2001, and XA5001	RM1 XA101, RM1 XA1011

Common side view

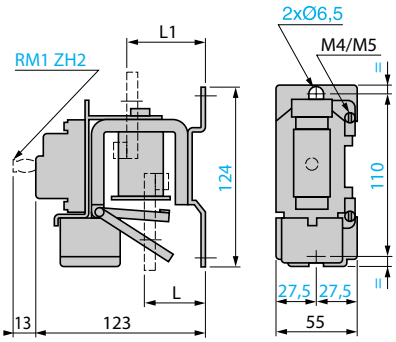

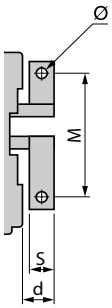

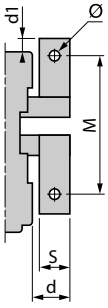

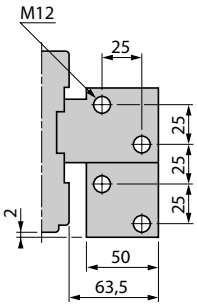

RM1 XA●●●1 with electrical reset ER1 XA2●

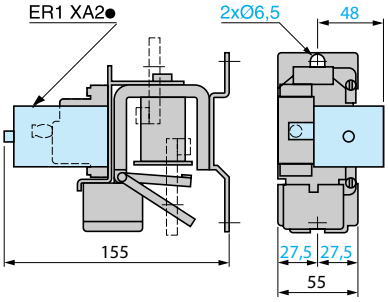

RM1	d	d1	M	L	L1	S	Ø
XA 063	20.5	–	83	25	40	15	M6
XA 100	20.5	–	87	25	40	20	M8
XA 160	27.5	5.5	94	25	40	25	M8
XA 200	27.5	5.5	94	25	40	25	M8
XA 315	35.5	–	74	44	55	30	M10
XA 500	40.5	7	84	44	55	40	M10
XA 101	–	–	–	37	64	–	–

Schemes

RM1 XA●●●1	RM1 XA●●●	RM1 XA		
Latching	Non-latching	3-wire control (without mechanical latching)	2-wire control (with mechanical latching)	3-wire control (with "trip" signal)

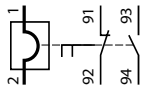

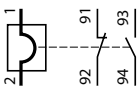

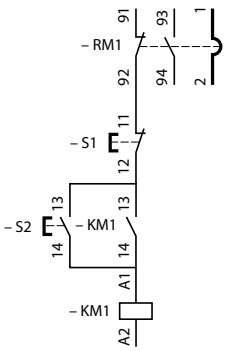

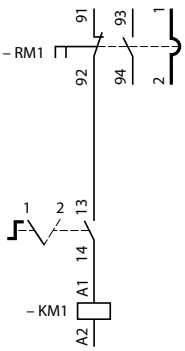

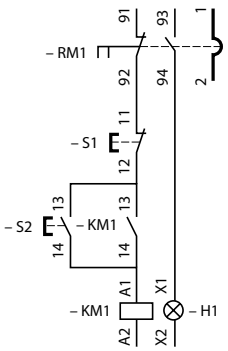

Characteristics: page 6/40

References : pages 6/41 and 6/42

TeSys protection components

Thermistor protection units for use with PTC thermistor probes *(1)*

Applications	**General protection and protection of motors fitted with PTC thermistor probes** *(1)*

Standards and approvals	IEC 60034-11, UL, CSA
Reset method	Automatic
Fault signalling	–
Fault memory in the event of a supply failure	–
Fault test	–
Rated control circuit voltages ∼ 50/60 Hz	Single voltage 115 V or 230 V
Rated control circuit voltages ⎓	Single voltage 24 V
Contact type	1 N/C
Protection unit type	**LT3 SE**
Pages	6/50

(1) PTC: Positive Temperature Coefficient

IEC 60034-11, PTB, UL, CSA LROS	
Automatic	Manual or automatic
On front panel of unit and remote	
–	Yes
–	By pushbutton on front panel of unit
Dual voltage 115/230 V Multivoltage 24…230 V	Single voltage 400 V Dual voltage 24/48 V, 115/230 V Multivoltage 24…230 V
Dual voltage 24/48 V	Dual voltage 24/48 V Multivoltage 24…230 V
Dual voltage 1 N/C + 1 N/O Multivoltage 2 C/O	Single voltage or dual voltage 1 N/C + 1 N/O Multivoltage 2 C/O
LT3 SA	**LT3 SM**
6/50	

TeSys protection components

Thermistor protection units for use with PTC thermistor probes *(1)*

Application

LT3 S● thermistor protection units continuously monitor the temperature of the machines to be protected (motors, generators, etc.) by means of PTC thermistor probes embedded in the machine windings.

If the nominal operating temperature of the probes is reached, they convert the rapid increase in resistance into a switching function which can be used to switch off the machine or signal a fault (see paragraph relating to thermistor probes below).

Accidental breaks in the supply circuits of the thermistors are also detected.

Electromagnetic compatibility

Conforming to "Electromagnetic compatibility" directive.
Conforming to standard EN 61000-6-2.

Resistance to electrostatic discharge (conforming to IEC 61000-4-2)	**Level 3**
Resistance to fast transients (conforming to IEC 61000-4-4)	**Level 3**
Susceptibility to electromagnetic fields (conforming to IEC 61000-4-3)	**Level 3**
Surge resistance 1.2/50 - 8/20 (conforming to IEC 61000-4.5)	**Level 4**
Immunity to microbreaks and voltage drops (IEC 61000-4-11)	
Suitable for use with variable speed controllers	

Thermistor probes

Range of most commonly used PTC thermistor probes:
from 90 to 160 °C, in steps of 10 °C.
Curve R = f (θ), characteristic of a PTC thermistor probe, is defined by standard IEC 60947-8.

The choice of PTC thermistor probe to be incorporated in the motor winding depends on the insulation class, the type of motor and the most suitable location for the probe. This choice is usually made by the motor manufacturer or the motor rewinder, who have all the necessary information.

Application example

Insulation class of rotating machines conforming to IEC 60034-11 (S1 duty)	NOT Nominal operating temperature	Temperature at which rapid increase in resistance occurs Probes used for Alarm	Fault
	°C	**°C**	**°C**
A	100	100	100
B	110	110	120
E	120	120	130
F	140	140	150
H	160	160	170

(1) PTC: Positive Temperature Coefficient

TeSys protection components

Thermistor protection units for use with PTC thermistor probes (1)

Protection unit type				LT3 SE	LT3 SA	LT3 SM
Reset method				Automatic	Automatic	Manual/Automatic
Fault indication				–	On front panel of unit and remote	On front panel of unit and remote
Fault test				–	–	By pushbutton on front panel of unit
Probe interchangeability				Label "Mark A" to IEC 60034-11	Label "Mark A" to IEC 60034-11	Label "Mark A" to IEC 60034-11
Environment						
Conforming to standards				IEC 60034-11 VDE 0660	IEC 60034-11 VDE 0660	IEC 60034-11 VDE 0660
Product certifications				–	LROS	
Degree of protection				IP 20 conforming to IEC 60529, VDE 0106		
CE marking				LT3 S● protection units have been designed to comply with the basic recommendations of European directives relating to low voltage and EMC. Therefore LT3 S● products bear the European Community CE mark.		
Ambient air temperature around the device	Storage Conforming to IEC 60068-2-1 and 2-2		°C	- 40…+ 85		
	Operation		°C	- 25…+ 60		
Maximum operating altitude	Without derating			1500 m		
	With derating			Up to 3000 m, the maximum permissible ambient air temperature for operation (60 °C) must be reduced by 5 °C per additional 500 m above 1500 m		
Vibration resistance	Conforming to IEC 60068-2-6			2.5 gn (2…25 Hz) 1 gn (25…150 Hz)		
Shock resistance	Conforming to IEC 60068-2-27			5 gn (11 ms)		
Operating positions without derating	In relation to normal vertical mounting plane			Any position		
Power supply circuit characteristics						
Rated control circuit voltage (Uc)	∼ 50/60 Hz	Single voltage	V	115 or 230	–	400
	0.85…1.1 Uc	Dual voltage	V	–	115/230	115/230. 24/48
	∼ 50/60 Hz 0.85…1.1 Uc	Multivoltage	V	–	24…230	24…230
	⎓	Single voltage	V	24	–	–
	0.8…1.25 Uc	Dual voltage	V	–	24/48	24/48
	0.85…1.1 Uc	Multivoltage	V	–	24…230	24…230
Average consumption	Sealed	∼	VA	< 2.5	< 2.5	< 2.5 except (400 V : 2.7)
		⎓	W	< 1	< 1	< 1

(1) PTC: Positive Temperature Coefficient

6

References : pages 6/50 and 6/51
Dimensions : page 6/52
Schemes : pages 6/52 and 6/53

TeSys protection components

Thermistor protection units for use with PTC thermistor probes *(1)*

Control circuit characteristics

Protection unit type			LT3 SE	LT3 SA	LT3 SM
Resistance	Tripping	Ω	2700…3100	2700…3100	2700…3100
	Reset	Ω	1500…1650	1500…1650	1500…1650
Maximum number of probes fitted in series *(2)*	Probes ⩽ 250 Ω at 25°		6	6	6
Voltage at terminals in the thermistor circuit	Normal operation (R = 1500 Ω)	**V**	< 2.5	< 2.5	< 2.5
	Conforming to IEC 60034-11 (R = 4000 Ω)	**V**	< 7.5	< 7.5	< 7.5
Thermistor probe short-circuit detection	Operating threshold	Ω	–	< 20	< 20

Connection of probes to the LT3	Distance	**m**	300	400	500	1000 *(3)*
	Minimum c.s.a. of conductors	**mm²**	0.75	1	1.5	2.5

Electrical characteristics of the output relay contacts

Contact type	Single voltage or dual voltage		1 N/C	1 N/C + 1 N/O	1 N/C + 1 N/O
	Multivoltage		–	2 C/O	2 C/O
Rated insulation voltage		**V**	∼ 500		
Maximum operational voltage		**V**	∼ 250 (∼ 400 V for **LT3 SM00V**)		
Rated impulse withstand voltage	Uimp	**kV**	2.5		
Conventional thermal current		**A**	5		
Operational power	At 220 V	**VA**	100 for 0.5 million operating cycles		
Breaking capacity	In cat. AC-16 120 V	**A**	6		
	250 V	**A**	3		
	In DC-13 24 V	**A**	2		
Cabling (cage type connector) for flexible or solid cable	Without cable end	**mm²**	2 x 1…1 x 2.5		
	With cable end	**mm²**	1 x 0.75…2 x 2.5		
Tightening torque		**N.m**	0.8		

Thermistor probe characteristics

Probe type			DA1 TT●●●	DA1 TS●●●
Conforming to standards			IEC 60034-11. Mark A	
Resistance	At 25 °C	Ω	3 x 250 in series	250
Rated operational voltage (Ue)	Per probe	**V**	⎓ 2.5 V max	⎓ 2.5 V max
Rated insulation voltage (Ui)		**kV**	2.5	1
Insulation			Reinforced	Reinforced
Length of connecting cables	Between probes	**mm**	250	–
	Between probe and motor terminal plate	**m**	1	1

(1) PTC: Positive Temperature Coefficient
(2) Provided that the total resistance of the probe circuit is less than 1500 Ω at 20 °C.
(3) For distances greater than 500 m take cabling precautions (twisted shielded pairs).

References : pages 6/50 and 6/51
Dimensions : page 6/52
Schemes : pages 6/52 and 6/53

Schneider Electric

TeSys protection components

Thermistor protection units for use with PTC thermistor probes *(1)*

LT3 S protection unit/thermistor probe combination

Guaranteed operating zones: examples with 3 probes type DA1 TT●●● (250 Ω at 25 °C) in series, conforming to standard IEC 60034-11, Mark A.

LT3 SE, LT3 SA, LT3 SM protection units

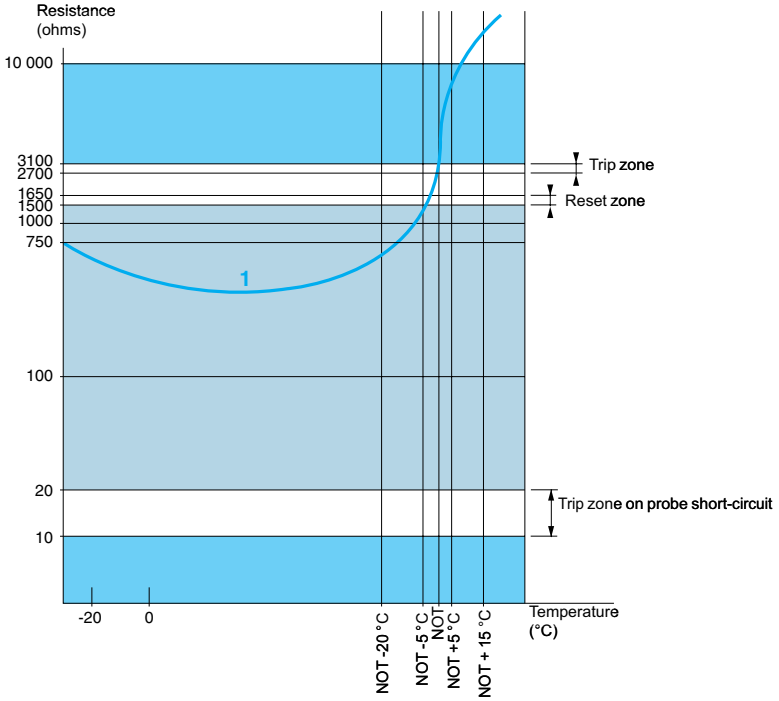

1 3 probes type DA1 TT●●● (250 Ω at 25 °C) in series.

NOT: Nominal Operating Temperature

Protection unit tripped.

Protection unit reset.

(1) PTC: Positive Temperature Coefficient

6

TeSys protection components

Thermistor protection units for use with PTC thermistor probes *(1)*

108694-24-M

LT3 SE00M

108698-24-M

LT3 SA00M

108696-24-M

LT3 SM00M

Protection units (without fault memory)

Units with automatic reset with thermistor short-circuit detection

Connection	Voltage		Output contact	Reference	Weight kg
Cage connectors	∼ 50/60 Hz	115 V	N/C	**LT3 SE00F**	0.220
		230 V	N/C	**LT3 SE00M**	0.220
	⎓	24 V	N/C	**LT3 SE00BD**	0.220

Units with automatic reset with thermistor short-circuit detection

On front panel: fault and voltage signalling indicator.

Connection	Voltage		Output contact	Reference	Weight kg
Cage connectors	∼ 50/60 Hz	115/230 V	N/C + N/O	**LT3 SA00M**	0.220
	⎓	24/48 V	N/C + N/O	**LT3 SA00ED**	0.220
	∼ 50/60 Hz or ⎓	24…230 V	2 C/O	**LT3 SA00MW**	0.220

Protection units (with fault memory)

Units with manual reset with thermistor short-circuit detection

On front panel:
- fault and voltage signalling indicator,
- Test and Reset button.

Connection	Voltage		Output contact	Reference	Weight kg
Cage connectors	∼ 50/60 Hz	400 V	N/C + N/O	**LT3 SM00V**	0.220
		24/48 V	N/C + N/O	**LT3 SM00E**	0.220
		115/230 V	N/C + N/O	**LT3 SM00M**	0.220
	⎓	24/48 V	N/C + N/O	**LT3 SM00ED**	0.220
	∼ 50/60 Hz or ⎓	24…230 V	2 C/O	**LT3 SM00MW**	0.220

(1) PTC: Positive Temperature Coefficient

Characteristics : pages 6/47 to 6/49
Dimensions : page 6/52
Schemes : pages 6/52 and 6/53

Schneider Electric

TeSys protection components

Thermistor protection units for use with PTC thermistor probes *(1)*

813383

DA1 TT●●●

813384

DA1 TS●●●

PTC thermistor probes *(1)*

Description	Nominal Operating Temperature (NOT)	Colour	Sold in lots of	Unit reference	Weight
	° C				kg
Integrated triple probes	90	Green/green	10	**DA1 TT090**	0.010
	110	Brown/brown	10	**DA1 TT110**	0.010
	120	Grey/grey	10	**DA1 TT120**	0.010
	130	Blue/blue	10	**DA1 TT130**	0.010
	140	White/blue	10	**DA1 TT140**	0.010
	150	Black/black	10	**DA1 TT150**	0.010
	160	Blue/red	10	**DA1 TT160**	0.010
	170	White/green	10	**DA1 TT170**	0.010
Surface probes	60	White/grey	10	**DA1 TS060**	0.005
	70	White/brown	10	**DA1 TS070**	0.005
	80	White/white	10	**DA1 TS080**	0.005
	90	Green/green	10	**DA1 TS090**	0.005
	100	Red/red	10	**DA1 TS100**	0.005

Accessories (to be ordered separately)

Mounting accessories

Description	Application	Sold in lots of	Unit reference	Weight
				kg
Adapter	For fixing on ⊔ rail DZ5 MB	10	**RHZ 66**	0.005

Marking accessories

Clip-in markers (maximum of 5 per unit)	Strips of 10 identical numbers (0 to 9)	25	**AB1 R●** *(2)*	0.002
	Strips of 10 identical capital letters (A to Z)	25	**AB1 G●** *(2)*	0.002

(1) PTC: Positive Temperature Coefficient
(2) When ordering, replace the ● in the reference with the number or letter required.

6

Characteristics : pages 6/47 to 6/49
Dimensions : page 6/52
Schemes : pages 6/52 and 6/53

TeSys protection components

Thermistor protection units for use with PTC thermistor probes *(1)*

Dimensions

LT3 SE, SA, SM

Mounting on ⊥ rail AM1 DP200

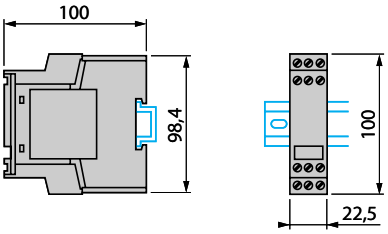

Mounting on 1 ⊥ rail
(with adapter RHZ 66)

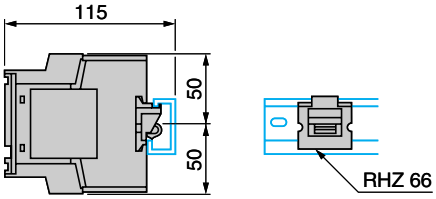

Schemes for "no fault" operation

LT3 SE

Without fault memory

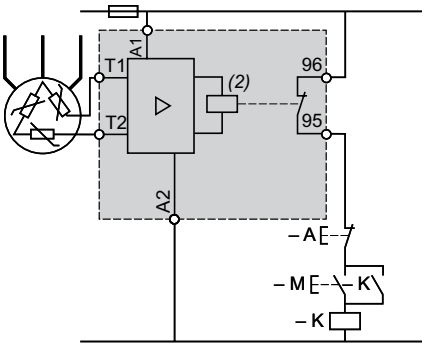

LT3 SA dual voltage

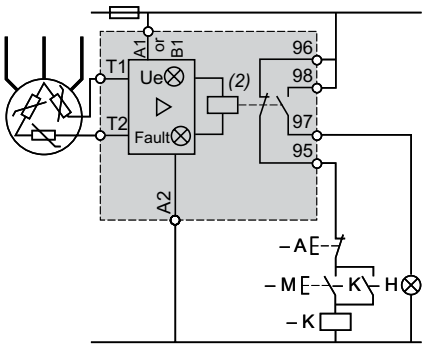

LT3 SA multivoltage

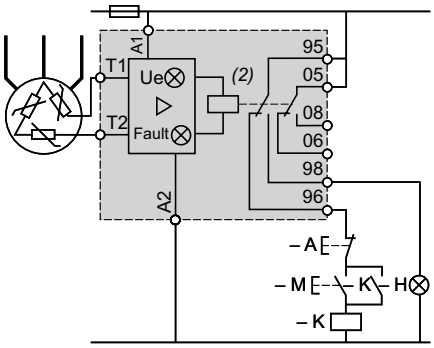

LT3 SM dual voltage and 400 V (without B1)

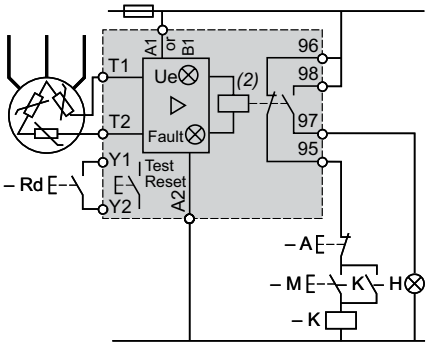

LT3 SM multivoltage

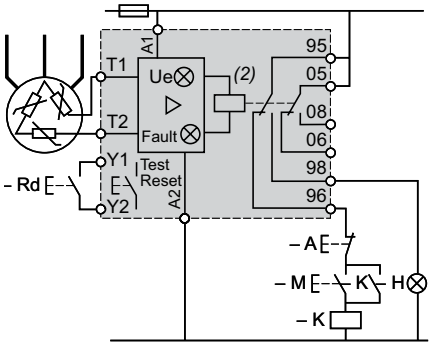

LT3 S● dual voltage

Terminal	A1	B1
Voltage	48 V	24 V
	230 V	115 V

Setting-up

Cabling

It is inadvisable to use the same multi-core cable for the thermistor probe circuit and the power circuit. This is especially important for long cable runs.
If it is impossible to comply with the above recommendation, a pair of twisted conductors must be used for the thermistor probe circuit.

Testing the insulation of the line connecting the thermistors to the LT3 S unit

Before carrying out this test, short-circuit all the terminals of the LT3 S protection unit.
Measure the insulation value between these terminals and earth using a megger or a flash tester, progressively increasing the voltage to the value defined by the standards.

Checking the PTC thermistor probes for correct operation

With the machine stopped, in the cold state and after having taken all the necessary safety precautions:
- disconnect the line linking the thermistors to the LT3 S protection unit, at the terminals of the machine being protected: motor, etc.,
- using an ohmmeter with a voltage rating less than or equal to 2.5 V, measure the resistance of the probe circuit at the machine terminals,
- depending on the number and type of thermistors connected in series, check that their resistance value at 25 °C is correct.

Example: motor fitted with 3 PTC thermistor probes with a resistance ⩽ 250 Ω at 25 °C.
Any value higher than 250 x 3 = 750 Ω indicates a problem.

(1) PTC: Positive Temperature Coefficient
(2) Relay energised: the contacts are shown in the "operating" position.

Characteristics : pages 6/47 to 6/49
References : pages 6/50 and 6/51

TeSys protection components

Thermistor protection units for use with PTC thermistor probes *(1)*

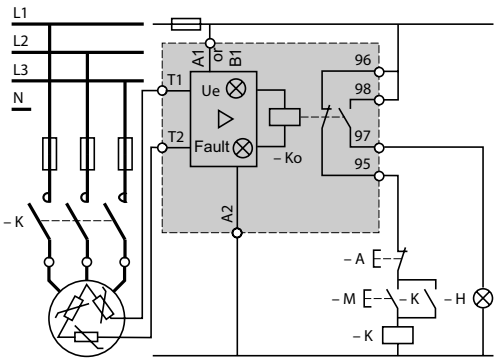

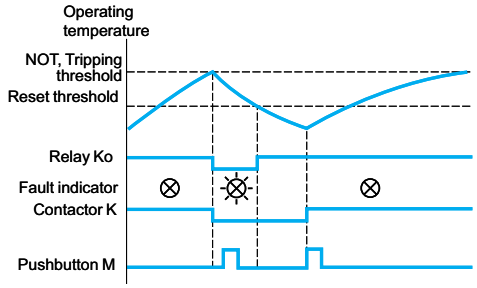

LT3 SA protection units

Starting

The LT3 SA is normally energised and its internal relay is in the pre-energised position.
The motor is started by operating pushbutton M automatically held in by K (3-wire control circuit).

Thermal fault

The strong increase in resistance of the PTC probes at the moment their temperature reaches the nominal operating temperature (NOT) is detected by the LT3 SA unit and causes the relay to drop out; indicator H comes on, as does the built-in indicator on unit LT3 SA.
Contactor K drops out and pressing button M has no effect.

Reset

As the motor cools, it reaches the reset threshold, 2 to 3°C below the nominal operating temperature.
The relay resets and the motor can be started by pressing button M.

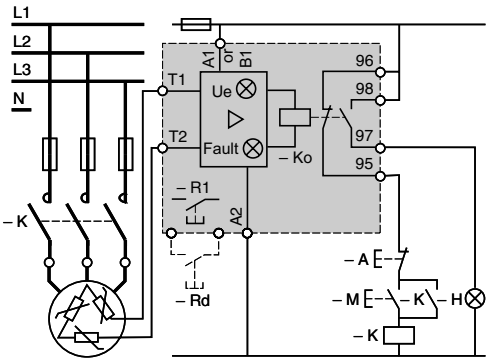

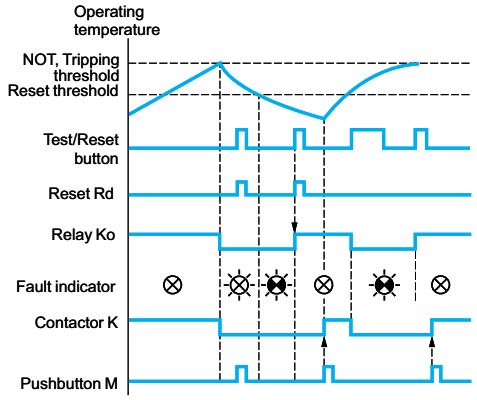

LT3 SM protection units

Operation is very similar to that described above, except for the following:

Reset

After tripping on thermal fault and cooling to the reset threshold, the Test/RESET button on the unit (R1) or a remote reset button (Rd) must be pressed to energise the relay.

The fault is therefore memorised, even though the temperature of the probes has dropped to well below the reset threshold.

Signalling circuit

As the relay is fitted with 2 separate contacts, the signalling voltage may be different from the contactor control voltage.

Test

Pressing the Test/RESET button simulates a fault and causes the relay to drop out: the FAULT indicator comes on, as does the remote signalling indicator. The unit is reset by pressing the Test/RESET button again.

(1) PTC: Positive Temperature Coefficient

Characteristics : pages 6/47 to 6/49
References : pages 6/50 and 6/51

TeSys protection components
Electronic over current relays

Presentation

LR97 D

LT47

LR97 D and LT47 electronic over current relays have been developed to satisfy machine protection requirements.
These relays have definite time characteristics: current threshold and time based function.
They are particularly recommended for providing mechanical protection on machines with high resistive torque, high inertia and with strong probability of jamming under steady state conditions.
They can be used for motor protection in the case of long starting times or frequent starting.
The LR97 D relay also incorporates two fixed time protection functions, one of 0.5 seconds against locked rotor and one of 3 seconds against phase failure.
LR97 D and LT47 can be used to provide mechanical shock protection. In this case, setting the O-Time knob to minimum will ensure tripping in 0.3 seconds.

Applications

LR97 D and LT47 relays are particularly suitable for the following machines:
- ■ Monitoring function for excessively long starting time on machines with a risk of difficult starting:
  - □ Machines with high resistive torque, high inertia machines.
- ■ Monitoring of machines during steady state operation: overtorque detection function
  - □ Machines with strong risk of jamming, machines with torque build-up over time,
  - □ Mechanical failure monitoring,
  - □ Faster detection of malfunctioning on machines where the motor is oversized in relation to its thermal protection I²t.
- ■ Motor protection for specific applications:
  - □ Machines with long starting times,
  - □ Machines with high on-load factor: more than 30 to 50 starts/hour,
  - □ Machine with fluctuating load from a steady state, where the thermal image of a thermal overload relay (thermal memory) is unsuitable in relation to actual overheating of the motor.

Examples of machines:
- □ Conveyors, crushers and mixers,
- □ Fans, pumps and compressors,
- □ Centrifuges and spin-dryers,
- □ Presses, shearing machines, saws, broaching machines, sanders and lifting hoists.

Operation

Because of their two separate time settings, LR97 D and LT47 relays can be combined with the motor-starter function:
D-Time: starting time, O-Time: trip time during steady state.
The D-Time function is only available during the motor starting phase. During this phase the overload detection function is inhibited in order to allow starting. Under steady state conditions, when the motor current is greater than the setting current due to an overload or single-phasing, the red LED lights up and the internal relay switches its contact after a time preset by the O-Time knob.
The red LED stays on, indicating that the relay has tripped.

The relays are simple to set, in 5 easy steps:
- Adjust the 3 knobs to maximum (Load, D-Time and O-Time),
- Adjust the D-Time knob to the value corresponding to the motor starting time.
- When the motor reaches steady state, adjust the Load knob (turn the knob counter-clockwise until the red LED starts to flicker).
- Slowly turn the Load knob clockwise until the LED goes out.
- Set the required tripping time, using the O-Time knob.

Description

Description

LR97 D●●●●●

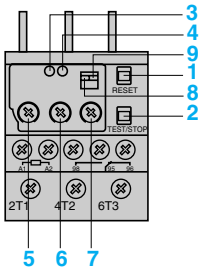

1 RESET knob
2 TEST/STOP knob
3 Ready/Run Indicator
4 Relay tripped indicator
5 Current setting
6 Adjustment of starting time

LT47 ●●●●●

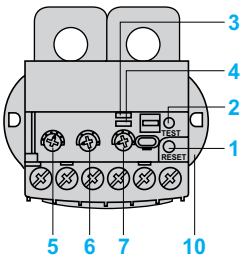

7 Adjustment of tripping time
8 Manual/Auto adjustment
9 Single-phase/3-phase adjustment
10 Retractable fixing lugs

Status signalling

LR97 D●●●●●

To assist fast diagnostics, two LEDs (one green and one red) allow signalling of the operating status:

Status			LED signal	
			Green LED	Red LED
Voltage			On	Off
Starting				
Steady state			On	Off
Overload			On	
Trip	Over-current		Off	On
	Rotor locked		Off	
	Phase failure	L1	Off	
		L2	Off	
		L3	Off	

LT47 ●●●●●

Condition	LED signal	
	Green LED	Red LED
Voltage	On	Off
Starting		
Steady state	On	Off
Overload	On	
Trip	Off	On

Curves : pages 6/55 and 6/56
Characteristics : pages 6/56 and 6/57
References : page 6/58
Dimensions, mounting : page 6/59
Schemes : page 6/59

Curves

LR97 D

Overload protection
Protection against locked rotor and mechanical jamming under steady state conditions

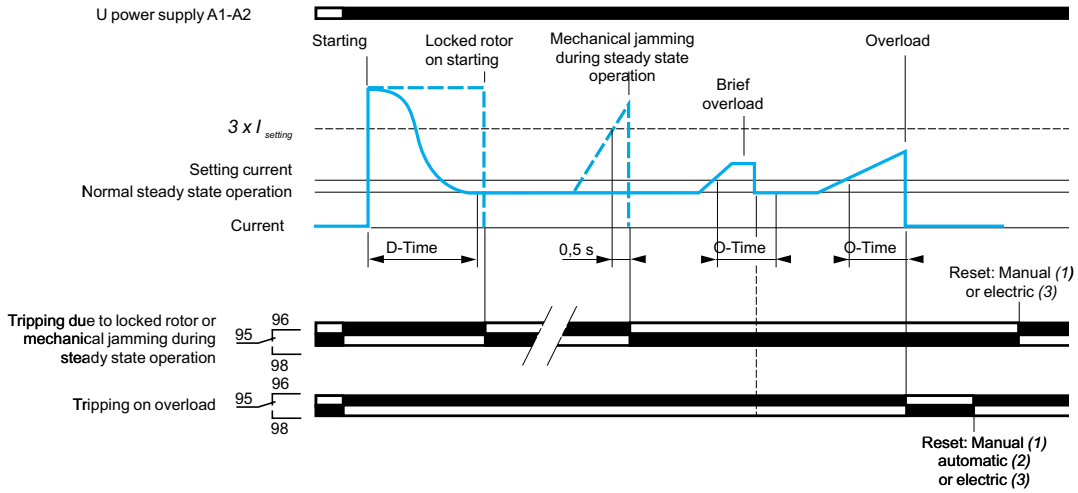

Overload protection
Protection against phase failure during starting and during steady state operation

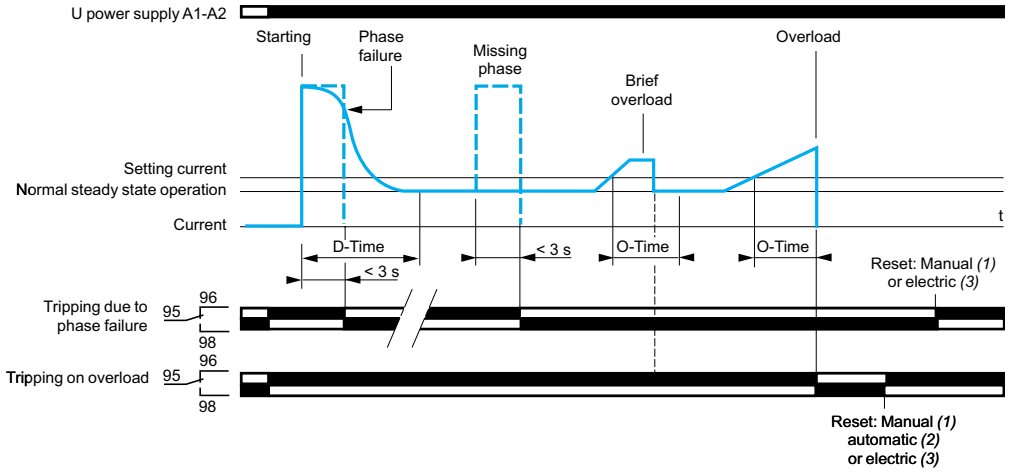

Mechanical shock protection

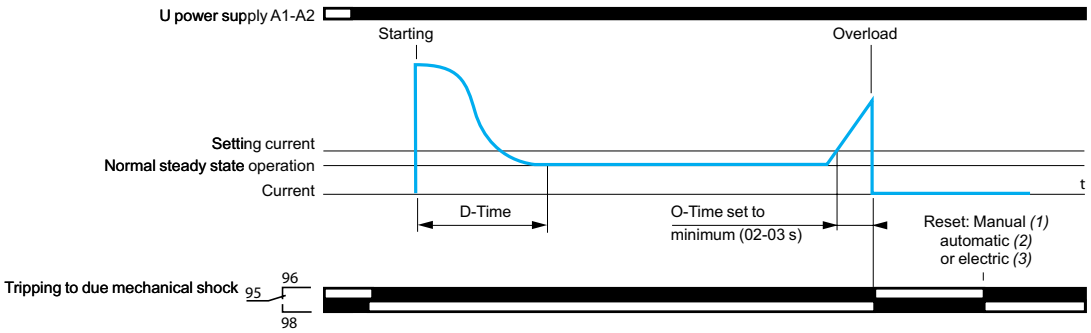

(1) By Reset button.
(2) Fixed time of 120 s. Selectable by dip switch. Function not available in the event of tripping due to locked rotor/mechanical jamming (I> 3 x $I_{setting}$) or phase failure.
(3) By brief interruption of power supply, minimum 0.1 s.

Curves (continued)

LT47

Overload protection

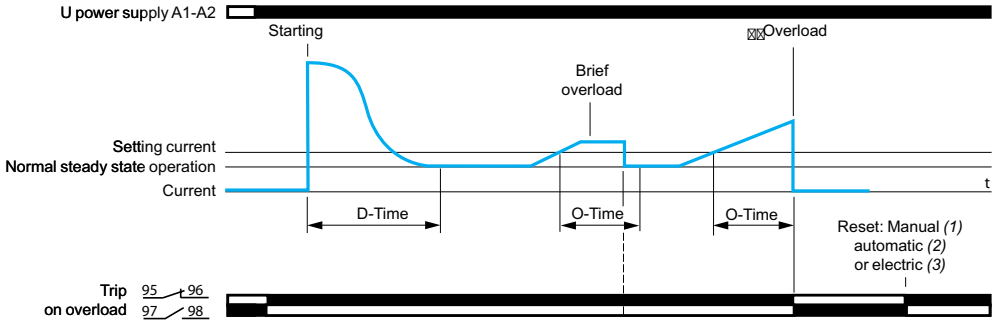

Mechanical shock protection

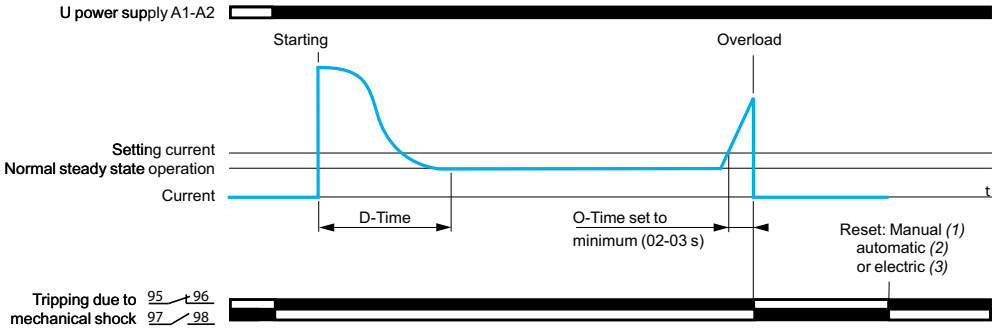

(1) By Reset button.
(2) Only available on version with automatic reset (LT47 ●●●●A). Time adjustable from 1 to 120 s with the R-Time knob.
(3) By brief interruption of power supply, minimum 0.1 s.

6

Characteristics

Environment

Relay type			LR97 D●●●●●	LT47 ●●●●●
Conforming to standards			IEC 60255-6, IEC 60947	IEC 60255-6, IEC 60947
Product certifications			UL, CSA	UL, CSA
Degree of protection	Conforming to IEC 60529 and VDE 0106		IP 20 (front face)	IP 20 (front face)
Protective treatment	Conforming to IEC 60068		"TH"	"TH"
Ambient air temperature around the device	Storage	°C	- 30…+ 80	- 30…+ 80
	Normal operation without derating (IEC 60947-4-1)	°C	- 25…+ 60	- 25…+ 60
Maximum operating altitude		m	2000	2000
Operating positions without derating	In relation to normal vertical mounting plane		Any position	Any position
Shock resistance	Permissible acceleration conforming to IEC 60068-2-7		15 gn - 11 ms	15 gn - 11 ms
Vibration resistance	Permissible acceleration conforming to IEC 60068-2-6		4 gn	4 gn
Dielectric strength at 50 Hz	Conforming to IEC 60255-5	kV	2	2
Surge withstand	Conforming to IEC 61000-4-5	kV	6	6
Resistance to electrostatic discharge	In open air	kV	8 (level 3)	8 (level 3)
	In direct mode	kV	6 (level 3)	6 (level 3)
Immunity to radiated radio-frequency disturbance		V/m	10 (level 3)	10 (level 3)
Immunity to fast transient currents		kV	2	2
Conducted emissions	Conforming to EN 55011		Class A	Class A
Conducted HF disturbance	Conforming to EN 61000-4-6	V	10	10

Characteristics

Auxiliary contact characteristics

Relay type				LR97 D●●●●●				LT47 ●●●●●			
Contact type				1 NO/NC				1 N/O + 1N/C			
Conventional thermal current			**A**	3				3			
Maximum hold consumption of controlled contactor coils (occasional operating cycles of contact 95-96)	Conforming to IEC 60947		**V**	∼ 24	∼ 48	∼ 110	∼ 220	∼ 24	∼ 48	∼ 110	∼ 220
			VA	70	140	360	360	70	140	360	360
			V	⎓ 24	⎓ 48	⎓ 110	⎓ 220	⎓ 24	⎓ 48	⎓ 110	⎓ 220
			W	55	55	28	28	55	55	28	28
Short-circuit protection	By gG, BS fuses. Maximum rating or **GB2** circuit-breaker		**A**	3				3			
Connection by cable or lug-clamps											
Flexible cable without cable end	1 or 2 conductors	Min.	**mm²**	1 x 0.75				1 x 1			
		Max.	**mm²**	2 x 2.5				2 x 2.5			
Flexible cable with cable end	1 or 2 conductors	Min.	**mm²**	1 x 0.34				1 x 1			
		Max.	**mm²**	1 x 1.5 + 1 x 2.5				2 x 2.5			
External Ø of lugs			**mm**	7				7			
Ø of screw			**mm**	M3				M3.5			
Tightening torque			**N.m**	0.6…1.2				0.8...1.7			

Electrical characteristics of power circuit

Relay type				LR97 D015●● to LR97 D25●●	LR97 D38●●	LT47 ●●●●●
Setting range	Depending on model		**A**	0.3…38		0.5…60
Tripping class				Adjustable		Adjustable
Rated insulation voltage (Ui)	Conforming to IEC 60947-4-1		**V**	690		690
	Conforming to UL, CSA		**V**	600		600
Rated impulse withstand voltage (Uimp)			**kV**	6		6
Frequency limits	Of the operating current		**Hz**	50…60		50…60
Connection by cable or lug-clamps						
Flexible cable without cable end	1 conductor	Min.	**mm²**	1.5	2.5	–
		Max.		10	10	–
Flexible cable with cable end	1 conductor	Min.	**mm²**	1	1	–
		Max.		4	6	–
External Ø of lugs			**mm**	10	12	–
Ø of screw			**mm**	M4	M4	–
Tightening torque			**N.m**	2	2	–

Operating characteristics

Relay type				LR97 D●●●●●		LT47 ●●●●S		LT47 ●●●●A
Adjustment	Current		**A**	"Load" knob		"Load" knob		"Load" knob
	Time	D-time knob	**s**	0.5…30		0.5…30		–
		O-time knob	**s**	0.2/0.3…10		0.2/0.3…10		0.2/0.3…30
		R-time knob	**s**	–		–		1…120
Reset	Manual			Reset button		Reset button		Reset button
	Automatic			120 s fixed		–		R-time knob: 1-120 s
	Electrical			By interruption of power supply (minimum 0.1 s)		By interruption of power supply (minimum 0.1 s)		By interruption of power supply (minimum 0.1 s)
Protection functions				**On starting**	**Steady state**	**On starting**	**Steady state**	–
Overload $I_{max} > I_{setting}$	Tripping			Inhibited during D-time	After O-time	Inhibited during D-time	After O-time	After O-time
Locked rotor, mechanical jamming I > 3 x $I_{setting}$	Tripping			After D-time	< 0.5 s	Inhibited during D-time	After O-time	After O-time
Sensitivity to phase failure	Tripping			< 3 s	< 3 s	Inhibited during D-time	After O-time	After O-time
Status and fault signalling (see table page 6/54)				2 LEDs		2 LEDs		2 LEDs
TEST/STOP function	Test			No load		No load		No load
	Stop			Under load		Under load		Under load
Sealing				Yes		Yes		Yes

TeSys protection components
Electronic over current relays

510429

LR97 D07●●

LR97 D electronic over current relays

Relay setting range	Usable range (1)	For use with contactor (2)	Relay supply voltage	Reference (3)	Weight
A	A				kg
0.3…1.5	0.3…1.3	LC1 D09…D38	∼ 200…240 V	**LR97 D015M7**	0.172
			∼ 100…120 V	**LR97 D015F7**	0.172
			⎓/∼ 24 V	**LR97 D015B**	0.172
			⎓/∼ 48 V	**LR97 D015E**	0.172
1.2…7	1.2…6	LC1 D09…D38	∼ 200…240 V	**LR97 D07M7**	0.172
			∼ 100…120 V	**LR97 D07F7**	0.172
			⎓/∼ 24 V	**LR97 D07B**	0.172
			⎓/∼ 48 V	**LR97 D07E**	0.172
5…25	5…21	LC1 D09…D38	∼ 200…240 V	**LR97 D25M7**	0.172
			∼ 100…120 V	**LR97 D25F7**	0.172
			⎓/∼ 24 V	**LR97 D25B**	0.172
			⎓/∼ 48 V	**LR97 D25E**	0.172
20…38	20…34	LC1 D25…D38	∼ 200…240 V	**LR97 D38M7**	0.172
			∼ 100…120 V	**LR97 D38F7**	0.172
			⎓/∼ 24 V	**LR97 D38B**	0.172
			⎓/∼ 48 V	**LR97 D38E**	0.172

510430

LT47 30●●●

LT47 electronic over current relays

Relay setting range	Usable range (1)	Relay supply voltage	Reference	Weight
A	A			kg
LT47 relay with manual/electric reset				
0.5…6	0.5…5	∼ 200…240 V	**LT47 06M7S**	0.192
		∼ 100…120 V	**LT47 06F7S**	0.192
		⎓/∼ 24 V	**LT47 06BS**	0.192
		⎓/∼ 48 V	**LT47 06ES**	0.192
3…30	3…25	∼ 200…240 V	**LT47 30M7S**	0.192
		∼ 100…120 V	**LT47 30F7S**	0.192
		⎓/∼ 24 V	**LT47 30BS**	0.192
		⎓/∼ 48 V	**LT47 30ES**	0.192
5…60	5…50	∼ 200…240 V	**LT47 60M7S**	0.192
		∼ 100…120 V	**LT47 60F7S**	0.192
		⎓/∼ 24 V	**LT47 60BS**	0.192
		⎓/∼ 48 V	**LT47 60ES**	0.192
LT47 relay with automatic reset				
0.5…6	0.5…5	∼ 200…240 V	**LT47 06M7A**	0,192
		∼ 100…120 V	**LT47 06F7A**	0.192
		⎓/∼ 24 V	**LT47 06BA**	0.192
		⎓/∼ 48 V	**LT47 06EA**	0.192
3…30	3…25	∼ 200…240 V	**LT47 30M7A**	0.192
		∼ 100…120 V	**LT47 30F7A**	0.192
		⎓/∼ 24 V	**LT47 30BA**	0.192
		⎓/∼ 48 V	**LT47 30EA**	0.192
5…60	5…50	∼ 200…240 V	**LT47 60M7A**	0.192
		∼ 100…120 V	**LT47 60F7A**	0.192
		⎓/∼ 24 V	**LT47 60BA**	0.192
		⎓/∼ 48 V	**LT47 60EA**	0.192

Accessories (to be ordered separately)

Description	For use with	Sold in lots of	Unit reference	Weight
				kg
Pre-wiring kits allowing connection of the LR97 D relay N/C contact directly to the contactor	LC1 D09…D18	10	**LAD 7C1**	0.002
	LC1 D25…D38	10	**LAD 7C2**	0.003
Terminal block for clip-on mounting on 35 mm rail (AM1 DP200)	LR97 D	1	**LAD 7B106**	0.100

(1) To allow adjustment of the tripping sensitivity, see adjustment method (page 6/54).
(2) Please see pages 5/46 and 5/47.
(3) If a pre-wiring kit is used, it is no longer possible to electrically wire signalling of tripped status.

Presentation, description : page 6/54
Curves : pages 6/55 and 6/56
Characteristics : pages 6/56 and 6/57
Dimensions, mounting : page 6/59
Schemes : page 6/59

Dimensions

LR97 D●●●●

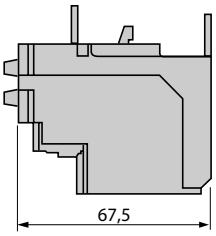

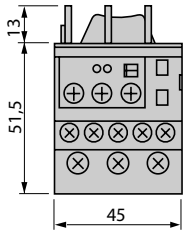

LT47 ●●●●

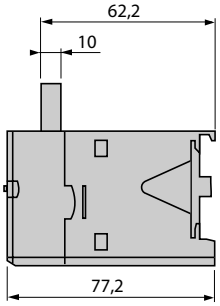

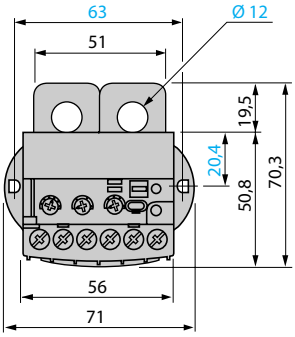

Mounting

LR97 D●●●●

Direct mounting beneath the contactor

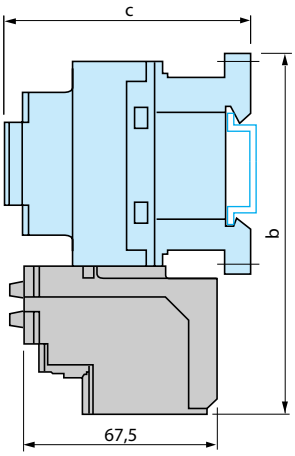

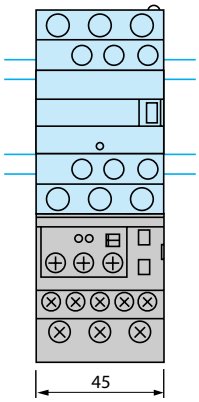

LC1	D09…D18	D25…D38
b	123	137
c	See pages 5/92 and 5/93	

LT47 ●●●●

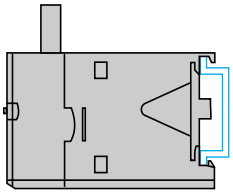

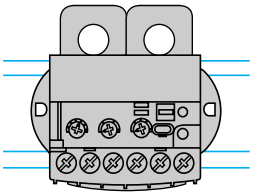

Note: *Can be mounted on ⊔ rail.*

Schemes

LR97 D●●●●

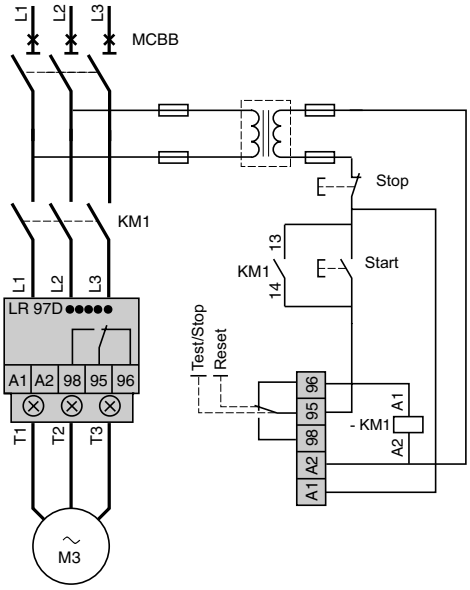

LT47 ●●●●

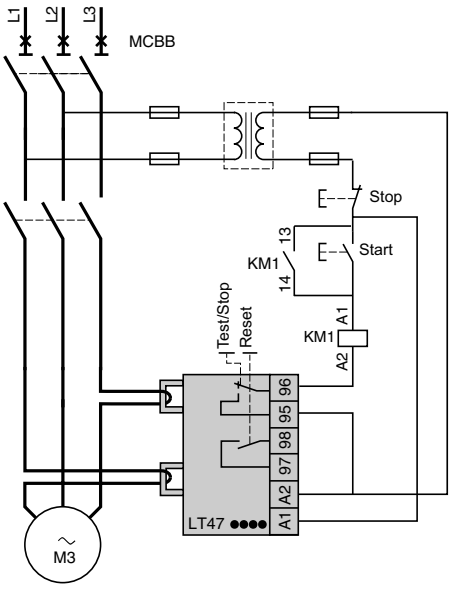

Presentation, description : page 6/54
Curves : pages 6/55 and 6/56
Characteristics : pages 6/56 and 6/57
References : page 6/58

107226

Presentation

Above 32 A, the TeSys U controller provides a motor starter management solution identical to that provided by TeSys U starter-controllers.

Used in conjunction with a short-circuit protection device and a contactor, it provides a motor starter whose functions are the same as those of a TeSys U starter-controller and, in particular, provides the following functions: overload protection, motor starter control and application monitoring.

It consists of a control unit whose adjustment range is compatible with the secondary of current transformers, plus a control base which also allows fitment of a function module or a communication module.

It requires a ⎓ 24 V external power supply.

The secondaries of current transformers, the ⎓ 24 V power supply, the 10 inputs and the 5 outputs are connected by screw terminal block.

520973

Application example

Detecting blockage of a rock crusher by monitoring the motor current.

Operating conditions

- Power: 90 kW at 400 V.
- In: 185 A.
- Duty class S1.
- Control circuit voltage: ∼ 230 V
- Control-command by PLC and serial link using the Modbus protocol.

Products used

Description	Item	Quantity	Reference	Page
Controller	1	1	**LUT M20BL**	6/64
Multifunction control unit	2	1	**LUCM T1BL**	6/64
Modbus communication module	3	1	**LUL C033**	1/93
Current transformer	4	3	**LUT C4001**	6/64
Contactor	5	1	**LC1 F185P7**	–
Circuit-breaker	6	1	**NS 250HMA**	–

523762

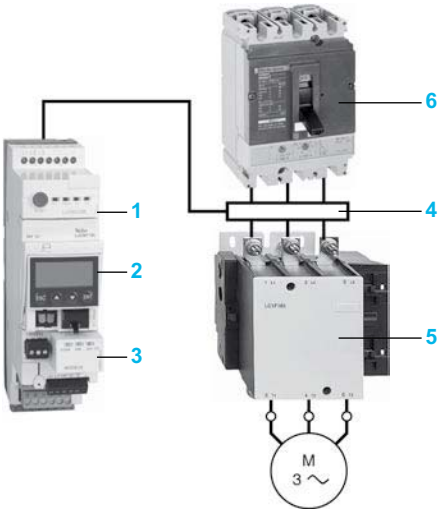

Functions performed

- Short-circuit protection with level of protection of 70 kA at 400V.
- Electronic protection against thermal overloads with an adjustment range of 4.
- Detection of crusher blockage by monitoring the induced overcurrent. To use the "overtorque or jam" function, the following parameters must be entered:
  - □ trip: the answer yes/no enables or disables the function,
  - □ time before tripping: the time period during which the value of the current must be above the tripping threshold in order to cause tripping (adjustable from 1 to 30 s).
  - □ tripping threshold: value as a % of the load current ratio in relation to the setting current. If the ratio remains above this threshold for the time specified in the previous parameter, the product trips (adjustable from 100 to 800 %).

It is possible to set the parameter for an alarm at a preset threshold under the same conditions as above.

Application example (continued)

Scheme

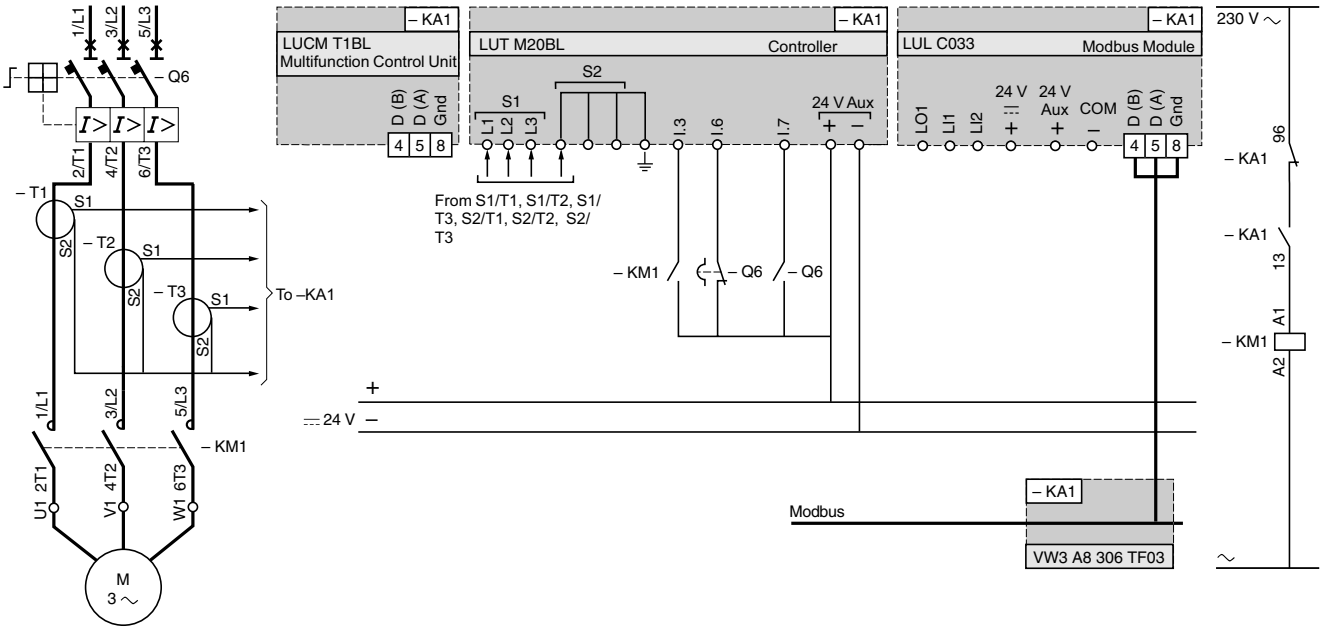

Other functions

The multifunction control unit incorporates other control and protection functions, such as: monitoring and control of phase current, alarm, …
Communication module LUL C033 also provides a programmable output and two programmable inputs.

6

Environment

Control base and control unit type			LUT M + LUCB T1BL or LUCD T1BL without LUL C	LUT M + LUCM T1BL or LUL C
Product certifications			UL, CSA, ASEFA	
Conforming to standards			IEC/EN 60947-4-1, UL 508, CSA C22-2 N°14	
Rated insulation voltage of the outputs (Ui)	Conforming to IEC/EN 60947-1, overvoltage category III, degree of pollution: 3	**V**	250	
	Conforming to UL508, CSA C22-2 n°14	**V**	250	
Rated impulse withstand voltage of the outputs (Uimp)	Conforming to IEC/EN 60947-4-1	**kV**	4	
Degree of protection Conforming to IEC/EN 60947-1 (protection against direct finger contact)	Front panel (outside connection zone)		IP 40	
	Front panel and wired terminals		IP 20	
	Other faces		IP 20	
Protective treatment	Conforming to IEC/EN 60068		"TH"	
	Conforming to IEC/EN 60068-2-30	**Cycles**	12	
	Conforming to IEC/EN 60068-2-11	**h**	48	
Ambient air temperature around the device	Storage	**°C**	- 40…+ 85	
	Operation	**°C**	- 25…+ 70	- 25…+ 60
Maximum operating altitude		**m**	2000	
Operating positions Without derating	In relation to normal vertical mounting plane		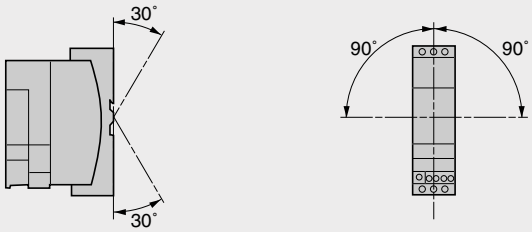	
Flame resistance	Conforming to UL 94		V2	
	Conforming to IEC/EN 60695-2-12	**°C**	960 (parts supporting live components)	
		°C	650	
Shock resistance 1/2 sine wave = 11 ms	Conforming to IEC/EN60068-2-27 *(1)*		15 gn	
Vibration resistance 5…300 Hz	Conforming to IEC/EN 60068-2-6 *(1)*		4 gn	
Resistance to electrostatic discharge	Conforming to IEC/EN 61000-4-2	**kV**	In open air: 8 - Level 3	
		kV	On contact: 6 - Level 3	
Resistance to radiated fields	Conforming to IEC/EN 61000-4-3	**V/m**	10 - Level 3	
Immunity to fast transient currents	Conforming to IEC/EN 61000-4-4	**kV**	CT outputs and inputs: 4 - Level 4	
		kV	Inputs and supply: 2 - Level 3	
Immunity to radioelectric fields	Conforming to IEC/EN 61000-4-6	**V**	10	

Control base and control unit relays

			Common mode	Serial mode
Immunity to dissipated shock waves	Conforming to IEC/EN 60947-4-1			
	Output relays / power line	**kV**	4	2
	Inputs	**kV**	2	1
	Serial communication	**kV**	2	–

(1) Without modifying the contact states, in the most unfavourable direction.

Control circuit supply characteristics

Operational voltage		**V**	⎓ 20.4…28.8
Power consumption		**W**	2 max
Associated protection		**A**	gG fuse. 0.5
Cabling			
Connectors	Pitch	**mm**	5
Flexible cable without cable end	1 conductor	**mm²**	0.2…2.5
	2 identical conductors	**mm²**	0.2…1.5
Flexible cable with cable end			
Without insulated ferrule	1 conductor	**mm²**	0.25…2.5
	2 identical conductors	**mm²**	0.25…1
With insulated ferrule	1 conductor	**mm²**	0.25…2.5
	2 identical conductors *(1)*	**mm²**	0.5…1.5
Solid cable without cable end	1 conductor	**mm²**	0.2…2.5
	2 identical conductors	**mm²**	0.2…1
Conductor size	1 conductor		AWG 24 to AWG 12
Tightening torque		**N.m**	0.5…0.6
Flat screwdriver		**mm**	3

Input characteristics

Operational voltage	**V**	⎓ 24
Logic inputs		Logic state 1: I ⩾ 6 mA - 16 V Logic state 0: I ⩽ 1.5 mA - 5 V

Discrete output characteristics

Base controller type			**LUT M10BL**	**LUT M20BL**
Type			Single break volt-free contacts	
Load	a.c. supply		C 300	B 300
	d.c. supply		24 V/5 A	24 V/5 A
Permissible power in cat. AC-15	For 500 000 operating cycles	**VA**	180	500
Permissible power in cat. DC-13	For 500 000 operating cycles	**W**	30	30
Associated protection		**A**	gG fuse, 4	gG fuse, 4
Used with contactor type *(2)*			Control voltage ⎓ 24 V: LP1K, LC1 D09…D95. Control voltage ∼ 24…240 V: LC1K, LC1D.	Control voltage ∼ 100…240 V: LC1K, LC1D, LC1 F185…F500

Characteristics of external current transformers LUT C●●●1

Precision		Class 5P					
Precision limit factor		10					
Maximum operating temperature	**°C**	70					
Transformer ratio		30/1	50/1	100/1	200/1	400/1	800/1
Diameter of conductor passage hole	**mm**	28	22	35	32	–	–
Maximum wire c.s.a.	**mm²**	30 x 10	30 x 10	40 x 10	65 x 32	38 x 127	53 x 127

(1) Use a double cable end.
(2) For other combinations, use an intermediate relay between the output of controller LUTM and the contactor coil.

TeSys protection components
TeSys U controllers

532083

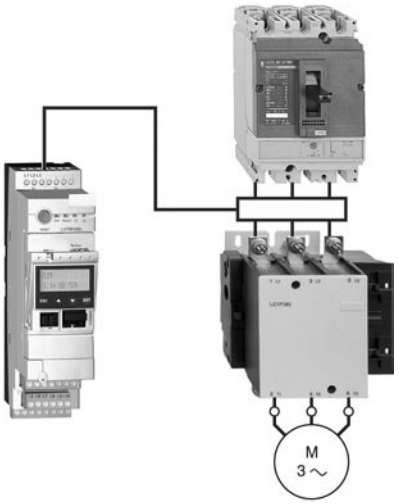

LUT M + LUCM T1BL + LUTC ●●

References

Control bases (auxiliary supply voltage ⎓ 24 V)

Connection		For use with contactor	Reference	Weight
Current transformers	Control			kg
Screws	Screws	LC1 D●●	**LUT M10BL**	0.800
		LC1 F●●●	**LUT M20BL**	0.800

Control units

Description	Class	For motor type	Setting range	Reference	Weight kg
Advanced	10	3-phase	0.35…1.05	**LUCB T1BL**	0.140
	20	3-phase	0.35…1.05	**LUCD T1BL**	0.140
Multifunction	5 to 30	3-phase	0.35…1.05	**LUCM T1BL**	0.175

Current transformers

Operating current		Reference	Weight
Primary	Secondary		kg
30	**1**	**LUT C0301**	0.550
50	**1**	**LUT C0501**	0.330
100	**1**	**LUT C1001**	0.450
200	**1**	**LUT C2001**	0.590
400	**1**	**LUT C4001**	0.870
800	**1**	**LUT C8001**	1.210

Function modules and communication modules

The TeSys U controller is compatible with the modules listed below:
- ■ Thermal overload alarm module LUF W10,
- ■ Motor load indication module LUF V2,
- ■ Communication modules:
- □ Modbus (LUL C033),
- □ CANopen (LULC08),
- □ DeviceNet (LULC09),
- □ Advantys STB (LUL C15).

Note : *Communication modules* ***LUL C07*** *(Profibus DP),* ***ASILUF C5*** *and* ***ASILUF C51*** *(AS-Interface) are not compatible with the TeSys U controller.*
Module ***LUF W10*** *is only compatible with control units* ***LUCB T1BL*** *and* ***LUCD T1BL****.*

6

Combinations providing type 2 coordination

With circuit-breaker

Standard power ratings of 3-phase motors 50-60 Hz in category AC-3 400/415 V		Circuit-breaker			Contactor	TeSys U controller	Current transformers
PkW	IeA	Reference	Rating A	Irm *(1)* A	Reference *(2)*	Reference	Reference
18.5	35	**GV3 L40**	40	560	**LC1 D50A**	**LUTM + LUC●**	**3 x LUT C0501**
22	41	**GV3 L50**	50	700	**LC1 D50A**	**LUTM + LUC●**	**3 x LUT C1001**
30	55	**GV3 L65**	65	910	**LC1 D65A**	**LUTM + LUC●**	**3 x LUT C1001**
37	66	**NS80HMA**	80	1040	**LC1 D80**	**LUTM + LUC●**	**3 x LUT C1001**
45	80	**NS100HMA**	100	1300	**LC1 D95**	**LUTM + LUC●**	**3 x LUT C1001**
55	97	**NS160HMA**	150	1350	**LC1 D115**	**LUTM + LUC●**	**3 x LUT C2001**
75	132	**NS160HMA**	150	1800	**LC1 D150**	**LUTM + LUC●**	**3 x LUT C2001**
90	160	**NS250HMA**	220	2200	**LC1 F185**	**LUTM + LUC●**	**3 x LUT C2001**
110	195	**NS250HMA**	220	2640	**LC1 F225**	**LUTM + LUC●**	**3 x LUT C4001**
132	230	**NS400HMA**	320	3200	**LC1 F265**	**LUTM + LUC●**	**3 x LUT C4001**
160	280	**NS400HMA**	320	4160	**LC1 F330**	**LUTM + LUC●**	**3 x LUT C4001**
200	350	**NS630HMA**	500	5000	**LC1 F400**	**LUTM + LUC●**	**3 x LUT C4001**
220	385	**NS630HMA**	500	5500	**LC1 F400**	**LUTM + LUC●**	**3 x LUT C4001**
250	430	**NS630HMA**	500	6000	**LC1 F500**	**LUTM + LUC●**	**3 x LUT C8001**

With fuses

Standard power ratings of 3-phase motors 50-60 Hz in category AC-3 400/415 V		Circuit-breaker	aM fuses		Contactor	TeSys U controller	Current transformers
PkW	IeA	Reference	Size	Rating A	Reference *(2)*	Reference	Reference
18.5	35	**GS● F**	14 x 51	40	**LC1 D40A**	**LUTM + LUC●**	**3 x LUT C0501**
22	41	**GS● J**	22 x 58	50	**LC1 D50A**	**LUTM + LUC●**	**3 x LUT C1001**
30	55	**GS● J**	22 x 58	80	**LC1 D80**	**LUTM + LUC●**	**3 x LUT C1001**
37	66	**GS● J**	22 x 58	100	**LC1 D80**	**LUTM + LUC●**	**3 x LUT C1001**
45	80	**GS● J**	22 x 58	100	**LC1 D95**	**LUTM + LUC●**	**3 x LUT C1001**
55	97	**GS● L**	T0	125	**LC1 D115**	**LUTM + LUC●**	**3 x LUT C2001**
75	132	**GS● L**	T0	160	**LC1 D150**	**LUTM + LUC●**	**3 x LUT C2001**
90	160	**GS● N**	T1	200	**LC1 F185**	**LUTM + LUC●**	**3 x LUT C2001**
110	195	**GS● N**	T1	250	**LC1 F225**	**LUTM + LUC●**	**3 x LUT C4001**
132	230	**GS● QQ**	T2	315	**LC1 F265**	**LUTM + LUC●**	**3 x LUT C4001**
160	280	**GS● QQ**	T2	400	**LC1 F330**	**LUTM + LUC●**	**3 x LUT C4001**
200	350	**GS2 S**	T3	500	**LC1 F400**	**LUTM + LUC●**	**3 x LUT C4001**
220	385	**GS2 S**	T3	500	**LC1 F400**	**LUTM + LUC●**	**3 x LUT C4001**
250	430	**GS2 S**	T3	500	**LC1 F500**	**LUTM + LUC●**	**3 x LUT C8001**
315	540	**GS2 S**	T3	630	**LC1 F630**	**LUTM + LUC●**	**3 x LUT C8001**

(1) Irm: setting current of the magnetic trip.
(2) For reversing operation, replace the prefix LC1 with LC2.

Dimensions, mounting

Controllers

LUTM ●0BL

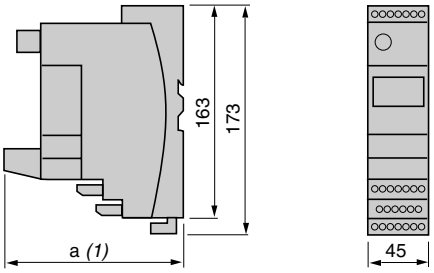

	a
With Modbus module	135
With Advantys STB, CANopen or DeviceNet modules	147

(1) Depth with communication module

Rail mounting

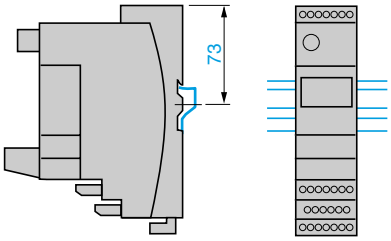

Rail mounting

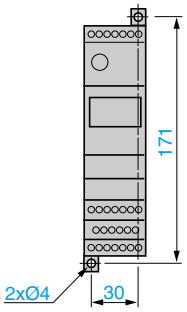

Current transformers

LUTC 0301…1001

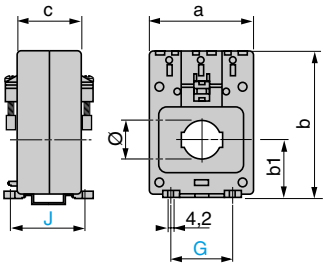

LUTC	a	b	b1	c	Ø	G	J
0301	78	108	42	46	28	45	54
0501	57	86	31	42	23	45	50
1001	78	108	42	46	35	45	54

LUTC 2001…8001

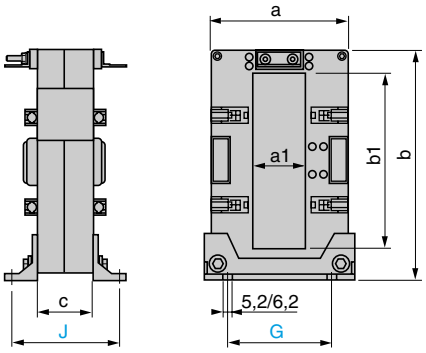

LUTC	a	a1	b	b1	c	G	J
2001	94	32	99	55	40	68	52
4001	99	38	170	127	40	75	64
8001	125	54	170	127	40	95	67

Presentation : page 6/60
Characteristics : pages 6/62 and 6/63
References : page 6/64
Schemes : page 6/67

Schneider Electric

Schemes

Reversing controller LUT M

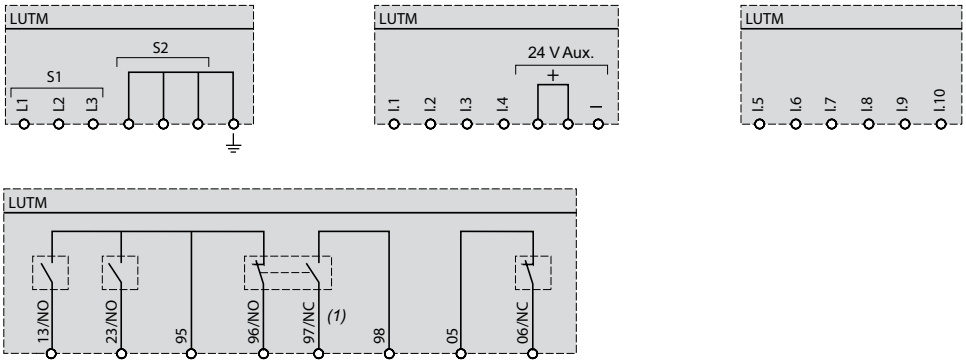

3-wire control, pulsed start with maintaining contact

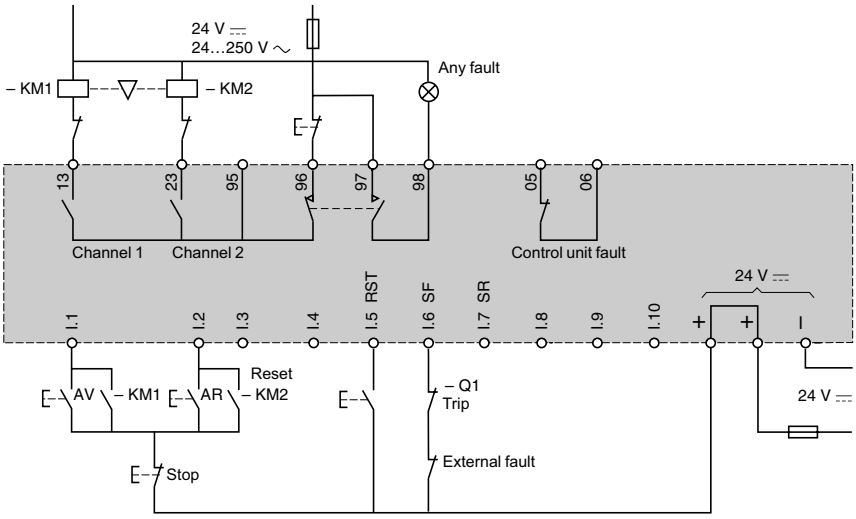

Control for Modbus communication module LUL C033

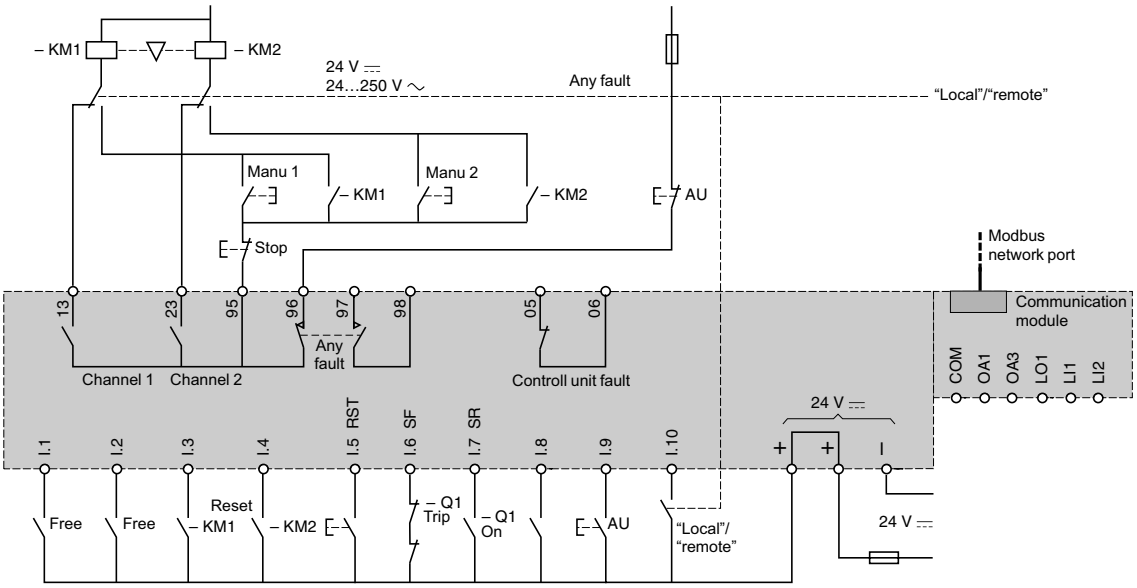

(1) The contacts are represented with controller powered up and not in a fault condition.

Presentation :
page 6/60

Characteristics :
pages 6/62 and 6/63

References :
page 6/64

Dimensions, mounting :
page 6/66

Applications	**Multifunction motor and machine protection**

Device type	**Controllers**				
For network/bus	Modbus	CANopen	DeviceNet	Profibus DP	Ethernet TCP/IP
Current range	0.4…100 A (with internal current transformer) 100…810 A (with external current transformer)				
Control voltage	⎓ 24 V ∼ 100…240 V				
Number of I/O	6 inputs 4 outputs				
Measurements	- Current between phases - Earth fault. - Motor temperature.				
Functions	**Protection and monitoring functions:** - thermal overload, - motor temperature monitoring, - phase imbalance and phase failure, - locked rotor, - long starting times, - phase reversal, - earth fault.				
Device type	**LTM R••M••**	**LTM R••C••**	**LTM R••D••**	**LTM R••P••**	**LTM R••E••**
Pages	6/86				

6

Input extension modules, for all LTM R controllers		**Operator control unit**
–		–
–		–
⎓ 24 V *(1)*	∼ 100…240 V *(1)*	Powered via the LTM R controller or via the LTM E extension module.
4 independent inputs		–
Voltage between phases		–
Monitoring functions: - voltage, - power, - Cos φ (power factor)		**Display functions:** - measurements, - faults and alarms, - statistics, etc...
LTM EV40BD	**LTM EV40FM**	**LTM CU**
6/87		6/87

(1) Input control voltage. The electronics are powered via the controller.

6

TeSys protection components
TeSys T Motor Management System

526378

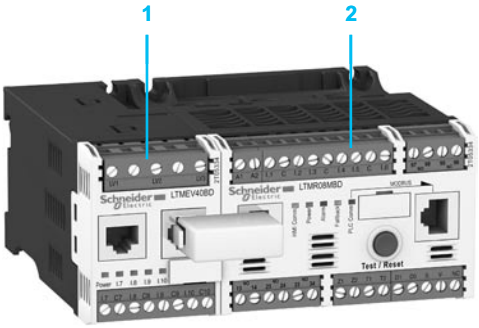

1 LTM EV40BD extension module
2 LTM R08MBD controller

Presentation

TeSys T is a motor management system that provides protection, metering and monitoring functions for single-phase and 3-phase, constant speed, a.c. motors up to 810 A.

Suitable for the harshest applications, this product range offers:
- high-performance multifunction protection, independent of the automation system,
- a local HMI control unit for reading, displaying and modifying the parameters monitored, diagnostics, etc.....
- configuration of the application using PowerSuite software,
- connection to the automation system via a communication network (selection according to various protocols).

Application

The TeSys T motor management system is used for motor control and protection in harsh industrial applications, in which downtime must be avoided because it is very costly: Oil & Gas, chemical industry, water treatment, metal, minerals and mining, pharmaceutical industry, microelectronics, tunnels, airports etc.

With TeSys T, untimely stoppages of a process or manufacturing, associated with a motor, are anticipated via predictive analysis of fault situations. Fault tripping is therefore reduced to a minimum.

Its use in motor control panels makes it possible to:
- increase the operational availability of installations,
- improve flexibility from project design through to implementation,
- increase productivity by making available all information needed to run the system.

The TeSys motor management system integrates perfectly with Schneider Electric low voltage equipment, such as Okken, Blokset and Prisma.

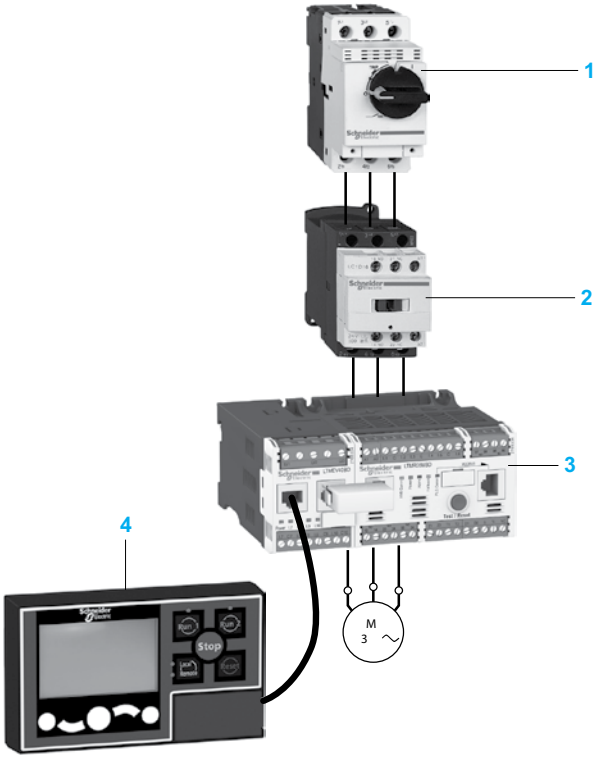

1 Magnetic circuit-breaker
2 Contactor
3 Controller with extension module
4 Operator control unit

526379

LTM R08MBD

526380

LTM EV40BD

568605

LTM CU

Presentation (continued)

Composition of the motor management system

The system comprises:
- ■ an LTM R motor management controller
  - □ with integral current transformer up to 100 A,
  - □ above 100 A, by external current transformer up to 810 A,
- ■ an LTM E extension module,
- ■ an LTM CU operator control unit,
- ■ configuration software incorporated in the PowerSuite software application,
- ■ accessories for system set-up.

Communication
The LTM R controller is equipped with a communication interface to allow remote monitoring and control of the motor. All motor information is then available at automation system level.

The following networks are available:
- ■ Modbus, CANopen, DeviceNet, ProfiBus DP and Ethernet TCP/IP

.

TeSys T system functions

Protection functions:
- ■ against thermal overload,
- ■ against phase imbalance and phase failure,
- ■ thermal motor protection via PTC probes,
- ■ against phase reversal,
- ■ against earth faults,
- ■ against long starting times and motor stalling,
- ■ against automatic load shedding and restarting,
- ■ against load fluctuations (I, U, P),
- ■ against variations of Cos φ (power factor).

Metering functions
- ■ Measurements (rms values):
  - □ current on the 3 phases,
  - □ voltage on the 3 phases (shedding),
  - □ motor temperature,
  - □ earth fault,
- ■ Values calculated:
  - □ average current,
  - □ frequency,
  - □ Cos φ (power factor), power, power consumption...

Motor control functions
A motor managed by TeSys T can be controlled:
- ■ locally, using the logic inputs present on the product, or via the HMI terminal
- ■ remotely, via the network (connection by terminal block or connector except for DeviceNet: terminal block only).,

Motor control modes
5 predefined motor control modes are incorporated in the controller:
- ■ overload mode: monitoring of motors whose control is not managed by the controller,
- ■ independent mode: starting of non-reversing motors,
- ■ reverser mode: starting of reversing motors,
- ■ 2-step mode: 2-step starting of motors (star-delta, by autotransformer and by resistor),
- ■ 2-speed mode: 2-speed starting of motors (Dahlander, pole changer).

A 6th "Custom" mode is available to allow the user to create a specific motor control mode that is not predefined in the controller.

Statistical and diagnostic functions
- ■ fault statistics: counters per type of protection and history of the last 5 faults,
- ■ motor statistics: saving of motor statistics values,
- ■ diagnosis of faults affecting correct operation of the product.

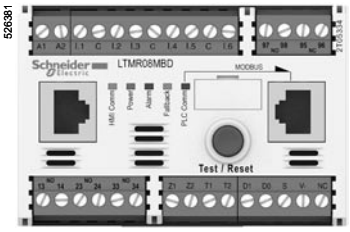

LTM R●●

Description

The LTM R controller

The controller is the central component in the motor management system.
It manages the basic functions such as:
- measurement of 3-phase current via integral current transformers from 0.4 to 100 A (up to 810 A by external current transformers),
- measurement of earth current by external earth fault toroid.
- measurement of motor temperature by PTC probe,
- inputs and outputs for the various motor control modes, fault management and associated functions.

Characteristics

As standard, the controller manages the following predefined control mode functions:
- overload mode,
- independent mode,
- reverser mode,
- 2-speed mode,
- 2-step mode,
- "Custom" mode.

Supply
2 types of controller power supply are available:
- ⎓ 24 V,
- ∼ 100…240 V.

Current ranges
3 current ranges allow measurement of motor current from 0.4 to 100 A:
- 0.4…8 A,
- 1.35…27 A,
- 5…100 A.

For use with external current transformers, choose the 0.4…8 A range (1 or 5 A current transformer secondary).

Inputs
- 6 discrete logic inputs.

Outputs
- 3 relay logic outputs (1N/O)
- 1 relay output for fault signalling (1N/O + 1N/C))

Measurements
- connections for a temperature probe,
- connections for an earth fault toroid.

LTM E extension module

The extension module adds the following functionalities to the TeSys T controller:
- voltage measurement on the 3 phases. This enables it to calculate numerous engine monitoring parameters (power, frequency, Cos φ …),
- 4 additional inputs.

Characteristics

Inputs
- 4 discrete logic inputs (independent).

Power supplies
- 2 types of power supply for the inputs: ⎓ 24 V and ∼ 100…240 V.

A ⎓ 24 V controller can be assembled with an ∼ 100…240 V extension module and vice versa.

Voltage measurement between phases up to 690 V nominal.

568605

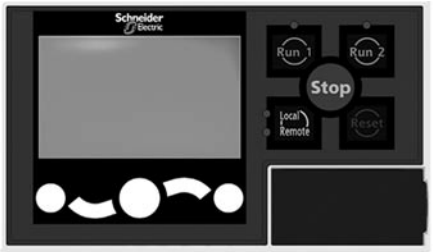

LTM CU

Description (continued)

Human/Machine Interfaces (HMI)

Depending on the application, 2 types of HMI can be used with the LTM R controller.

■ The LTM CU operator control unit:
□ Entirely dedicated to the TeSys T range,
□ Only for control/monitoring of an LTM R controller.

■ A Magelis XBT N410 terminal
□ For control/monitoring of 1 to 8 LTM R controllers.

LTM CU operator control unit

Dedicated exclusively to TeSys T controllers, control unit LTM CU makes it possible to:

■ Configure the parameters of the LTM R controller
■ Display information on controller configuration and operation.
■ Monitor the alarms and faults generated by the controller.
■ Local control of the motor via the local control interface (keys can be customised).

Three different languages can be loaded into the LTM CU controller at the same time.
By default, these 3 languages are: English, French and Spanish.
***Note**: English is the only compulsory language.*

A language download utility (LangTool), together with all the other languages, are available on the website “www.schneider-electric.com”.
This tool allows the languages present in the LTM CU control unit to be adapted.

The LTM CU HMI control unit has an RJ45 port, protected by a flexible cover to provide a good level of protection (IP54).
This port on the front panel allows connection to a PC, via a connecting cable, in order to use PowerSuite software.
In this case, the control unit acts as a transmitter and all information can then be viewed in PowerSuite.

The Magelis XBT N410 HMI terminal

Two applications have been predefined for TeSys T. Depending on the application loaded, the HMI terminal makes it possible to:

■ configure and monitor a motor starter (LTM_1T1_V1.dop).
■ monitor and modify certain parameters on up to 8 motor starters (LTM_1T8_X_V1.dop) *(1)*.

XBT L1000 programming software is needed for loading applications into the HMI terminal.
These applications are available on the website “www.schneider-electric.com”.

(1) Replace the X with an E for the English version, or an F for the French version.

LTM R controllers

Modbus

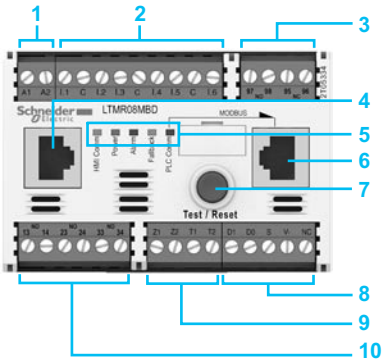

DeviceNet

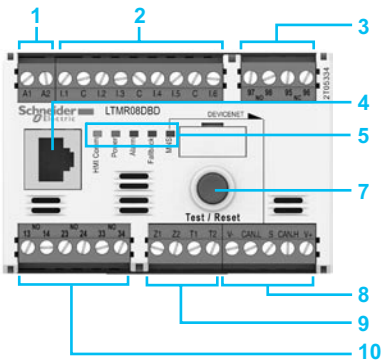

Profibus DP

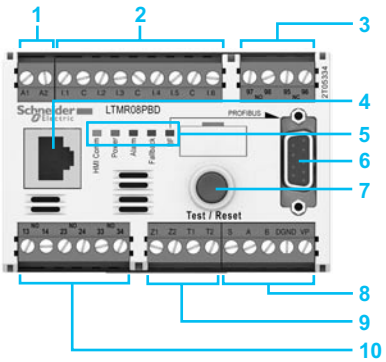

CANopen

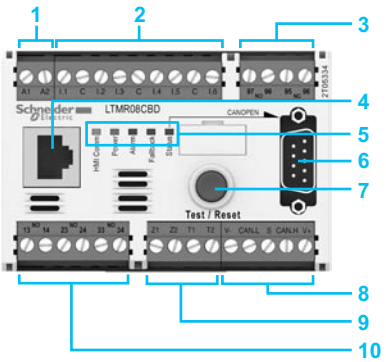

Ethernet TCP/IP

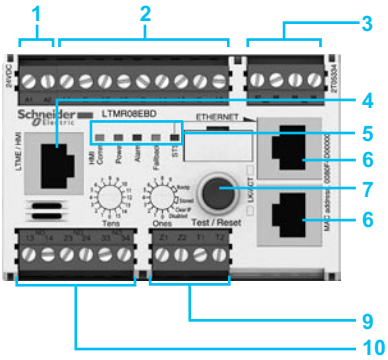

Controllers feature the following on their front panel:

1 Controller power supply.
2 Input connections.
3 Fault outputs (N/O+N/C).
4 Port for connection to the HMI terminal, a PC or an extension module (RJ45).
5 Controller status LEDs.
6 Network port for connection to the network by connector (except DeviceNet) *(1)*.
7 Test/Reset button.
8 Connection to the network by terminal block (except Ethernet TCP/IP).
9 Connection for an earth fault toroid and temperature probes.
10 Outputs for motor control mode function.

(1) Connection using power extension (daisy-chaining) is possible for Ethernet TCP/IP.

LTM EV40●● extension modules

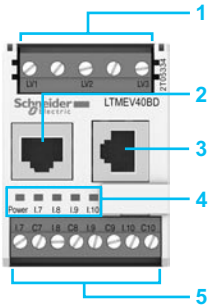

Extension modules have the following on their front face:
1 Inputs for voltage measurement.
2 Port for connection to the HMI terminal or to the PC.
3 Port for connection to the controller.
4 Extension module status LEDs.
5 Connection of additional inputs.

LTM CU operator control unit

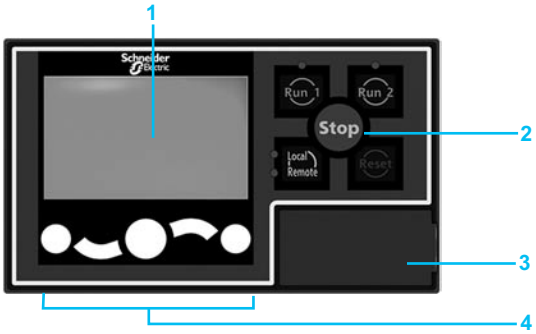

The control unit has the following on its front face:
1 Screen. LCD display
2 Local control interface including control keys and LEDs.
3 RJ45 port on front panel for connection to a PC (protected by a cover).
4 Contextual navigation keys.

Thermal and current protection functions

Functions Description	Setting range	Controller LTM R	Controller and extension module (LTM R + LTM E)	Alarm threshold	Fault threshold
Thermal overload: thermal protection of motor by monitoring current consumption	Class: 5, 10, 15, 20, 25, 30. Inverse ther/definite time	■	■	■	■
Motor temperature: thermal monitoring of the motor using temperature probes (winding, paper...). Up to 3 sensors in series.	PTC binary PTC/NTC analogue: 20 …6500 Ohm	■	■	■	■
Phase imbalance: monitors the symmetry of currents. To be used for imbalance < 80% of the average current *(1)*.	10…70% I average 0.2…20 s	■	■	■	■
Phase failure: monitors the symmetry of currents. To be used for imbalance < 80% of the average current *(1)*.	0.1…30 s	■	■	■	■
Phase reversal: signals when the phase sequence is different from the defined sequence (motor running).	A-B-C A-C-B	■	■	■	■
Long starting time: monitors the motor starting time	100…800 % of FLC *(2)* 1…200 s	■	■	■	■
Locked rotor: locking detected by a sudden increase in current after the start phase	100…800 % of FLC *(2)* 1…30 s	■	■	■	■
Min/max current load limit variations: monitors motor load through variations of current around preset thresholds.	**min.:** 30…100 % of FLC *(2)* 1…200 s **max.:** 20…800 % of FLC *(2)* 1…250 s	■	■	■	■
Earth fault: signals internal insulation faults, by vectorial summing of external currents, via earth fault toroid.	**internal:** 20…500 % min FLC *(2)* 0.05…25 s **external:** 0.02…10 A 0.05…25 s	■	■	■	■
Frequent starting: Protects the motor against overheating due to frequent starting.	0…999.9 s	■	■		

Voltage and power protection functions

Phase imbalance: monitors the symmetry of voltage between phases. To be used for imbalance < 40 % of the average voltage *(3)*.	3…15 % 0.2…20 s		■	■	■
Phase failure: monitors the symmetry of voltage between phases. To be used for imbalance > 40 % of the average voltage *(3)*.	0.1…30 s		■	■	■
Phase reversal: signals when the phase sequence is different from the defined sequence (motor stopped).	A-B-C A-C-B		■		■
Voltage variations. **Min/max voltage limits:** monitors voltage variations around preset thresholds.	**min.:** 70…99 % 0.2…25 s **max.:** 101…115 % 0.2…25 s		■	■	■
Load shedding: opens outputs O.1 and O.2 if voltage drops below a preset threshold.	68…115 % 1…9999 s		■		
Power variations. **Min/max power limits:** monitors power variations around preset thresholds.	20…800 % 0…100 s		■	■	■
Variations of Cos φ. **Min/max limits of Cos φ :** monitors variations of Cos φ around preset thresholds.	0…10…25 s		■	■	■

■ Function performed.

(1) Average current value measured on the 3 phases.
(2) FLC: Full Load Current (setting current).
(3) Average voltage value measured on the 3 phases.

Motor control functions

Functions	Description	With controller LTM R	With controller LTM R and extension module LTM E
Control modes	Local, via terminal block	X	X
	Local, via HMI terminal *(1)*	X	X
	Remote, via network	X	X
Operating modes	Overload	X	X
	Independent	X	X
	Reverser	X	X
	2-step	X	X
	2-speed	X	X
	"Custom" mode	X	X
Fault management	Manual reset	X	X
	Automatic reset	X	X
	Remote reset	X	X

Metering functions and statistics

Functions	Description	Measurement range	With controller LTM R	With controller LTM R and extension module LTM E
Measurements *(2)*	Current/Phase	0.08…1000 A	X	X
	Earth current	0.1633 x CT ratio	X	X
	Average current	0.08…1000 A	X	X
	Current imbalance between phases	0…200 %	X	X
	Thermal capacity level	0…200 %	X	X
	Motor temperature rise	0…6500 Ohm	X	X
	Frequency	0… 100 Hz		X
	Voltage between phases	∼0…830 V		X
	Voltage imbalance between phases	0…200 %		X
	Active power	0…6553.5 kW		X
	Reactive power	0…6553.5 kWr		X
	Cos φ (power factor)	0…100		X
	Active power consumption	0…400 kWh		X
	Reactive power consumption	0…400 kWrh		X
Fault statistics	Protection fault counters		X	X
	Protection alarm counters		X	X
	Diagnostic fault counters		X	X
	Motor control function counters		X	X
	Fault history		X	X
Fault diagnostics	Internal watchdog fault		X	X
	Controller internal temperature		X	X
	Temperature sensor connection		X	X
	Current connection		X	X
	Voltage connection			X
	Motor control commands (start, stop, run check back and stop check back)		X	X
	Control configuration checksum		X	X
	Loss of communication		X	X
Motor statistics	Number of motor control commands (O.1/O.2 starts)		X	X
	Operating time		X	X
	Number of starts/hour		X	X
	Last start I max.		X	X
	Duration of last start		X	X
Thermal overload statistics	Time to trip		X	X
	Time to restart		X	X
System operating statistics	Run, ON, Start, alarm, fault.		X	X

(1) HMI: Human Machine Interface.
See measurement details page 6/82.

Service classes offered by the Ethernet TCI/IP version

Class		A 20 ETH10/100 + FTP server
Basic Web server		None
Basic communications services Ethernet TCP/IP		Modbus messaging (read/write of data words)
Ethernet TCP/IP communication advanced management services	I/O Scanning	Yes
	Global Data	No
	Client FDR *(1)*	Automatic monitoring and updating of product parameter configuration. Automatic assignment of IP address and network parameters.
	SNMP network administrator *(2)*	Yes

Ethernet: different network topologies

Star topology

In a star topology, all the peripherals are linked via an intermediate peripheral (hub or switch)..

In industrial Ethernet applications, the use of full duplex switches (instead of hubs) as central peripherals is strongly recommended.

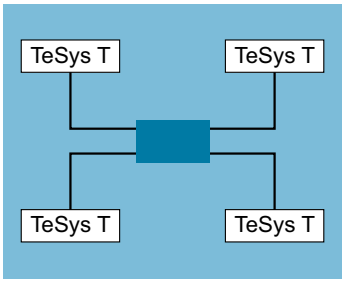

Star topology

Power extension *(Daisy chain)* topology

Power extension (or *Daisy chaining*), at bus level, is another connection topology commonly used in traditional, industrial automation system networks. The cable segments link several peripherals to each other, constituting the peripheral "section" of the network cable.

Ethernet Power extension *(Daisy chain)*
Power extension is not yet a very commonly used Ethernet connection topology, but will quickly become so when a large number of peripherals are made available in the market.
In an Ethernet power extension topology, the peripherals have:
- **2 Ethernet ports**
- and an **integrated switch**.

Schneider Electric is progressively introducing, into the industrial market, Ethernet peripherals that can be used in daisy chain type architectures.

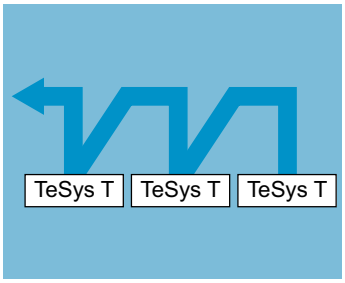

Daisy chain topology

Implementation of a power extension topology
No hub or switch is required for using a power extension topology. Each peripheral must have an integrated switch (two ports).
A port on the peripheral is connected to a port on the neighbouring upstream and downstream peripherals. These consecutive connections constitute the power extension (daisy chain).

Ethernet switches may be included in a power extension (daisy chain) topology when several scan chains are used by the monitoring peripheral.
The Ethernet switch must be installed close to the monitoring peripheral, with the various scan chains coming from the switch.

(1) FDR : Faulty Device Replacement.
(2) SNMP: Simple Network Management Protocol.

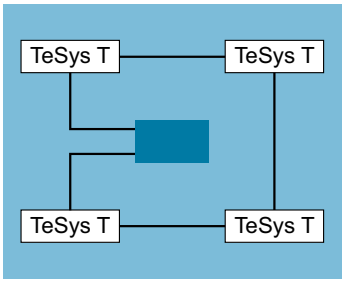

Ring topology

Ethernet: different network topologies *(continued)*

Ring topology

In a ring topology, all the peripherals or components of the network infrastructure are connected within a loop.
This type of topology makes it possible to achieve different levels of redundancy of the network.

Ethernet ring
Ethernet rings are generally the main networks in applications where a high level of reliability is required. If a ring topology is required, the switches handling this function must be used.

Redundancy
Redundancy of the network infrastructure is the key to development of applications with high operational reliability.
Implementing a single or double ring architecture makes it possible to provide protection against breaks in network segments.

Single ring
The first level of redundancy can be achieved by installing a single ring.
ConneXium switches can be used to establish main network ring configurations.
The ring is created using HIPER-Ring ports.
If a section of the line fails, the ring structure (including a maximum of 50 switches) converts into a line type configuration in less than 0.5 seconds.

Possible configurations and applications

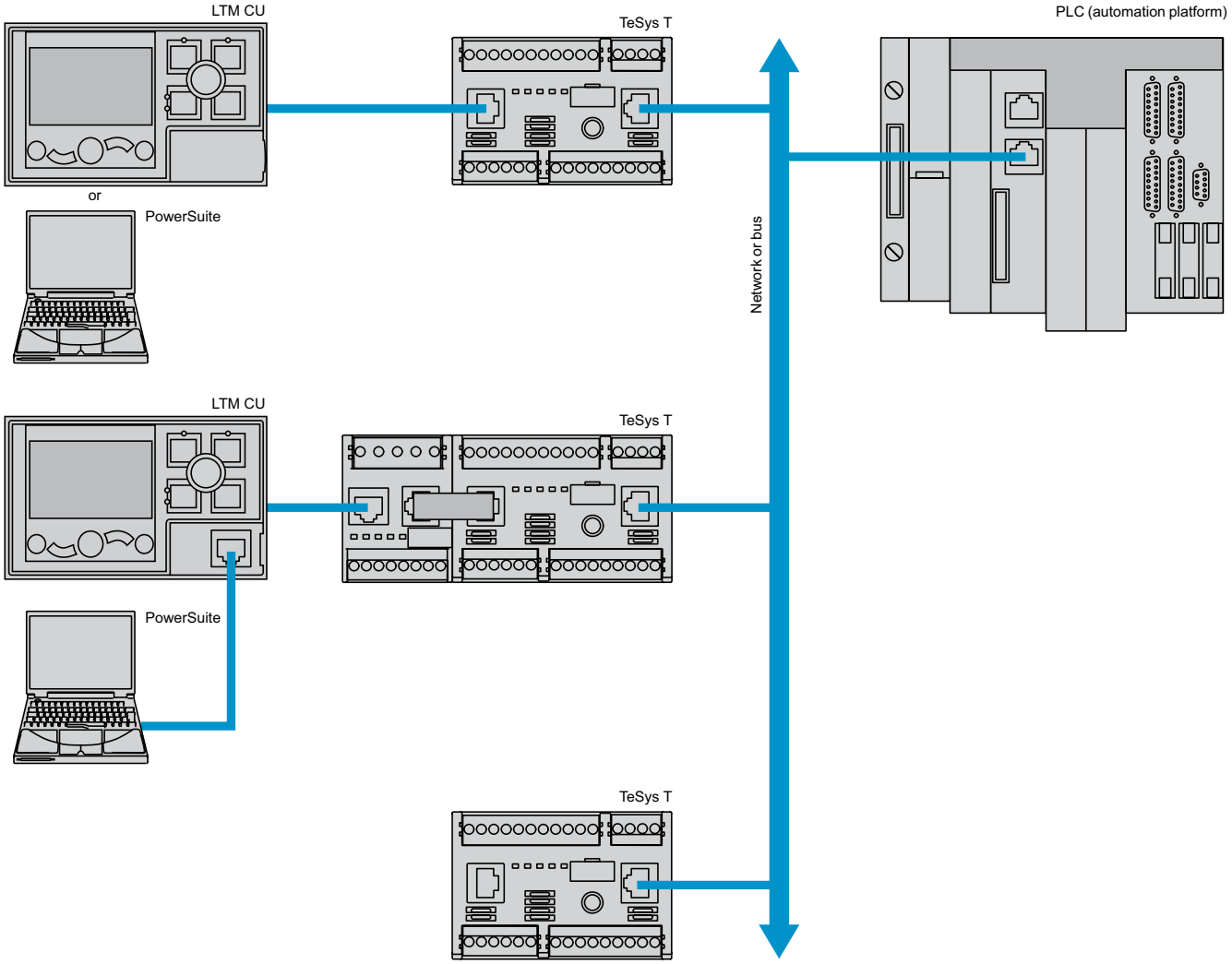

568609

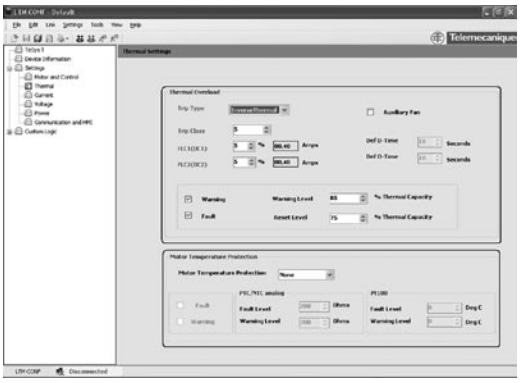

Example of TeSys T configurator setup screen

536196

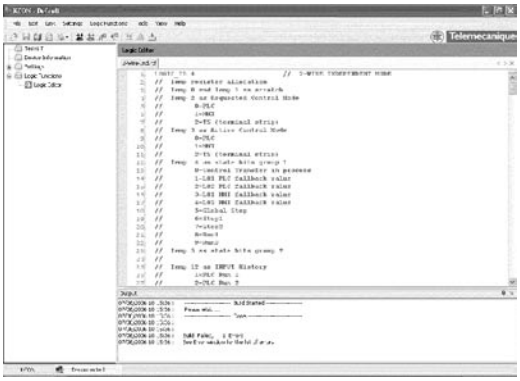

Example of logic editor screen.

Configuration with PowerSuite

The TeSys T configurator is incorporated in the PowerSuite software application, as from version 2.5. *(1)*
It allows configuration, commissioning and maintenance of motor starters protected by TeSys T.

A library containing predefined motor control mode functions is available in order to:
- allow standardisation,
- avoid errors,
- reduce motor starter setup times.

5 predefined motor control modes are incorporated in the controller:
- overload mode: monitoring of motors whose control is not managed by the controller,
- independent mode: starting of non-reversing motors,
- reverser mode: starting of reversing motors,
- 2-step mode: 2-step starting of motors (star-delta, by autotransformer and by resistor),
- 2-speed mode: 2-speed starting of motors (Dahlander, pole changer).

By using logic functions, a "Custom" mode makes it possible to:
- easily adapt these predefined motor control mode functions to the specific needs of your applications,
- create a link with the motor starter environment or
- create new functions.

The functions thus defined can be saved and used to build your function library for future applications.
To create special functions, a logic editor is incorporated in the configurator and allows a choice of 2 programming languages:
- function block,
- structured text.

(1) An update file is available, free of charge, on the website "www.schneider-electric.com". It will enable you to take advantage of the latest functions in the TeSys T motor management system.

Environment

Product type			LTM R controllers	LTM EV40●● extension modules
Conforming to standards			IEC/EN 60947-4-1, UL 508, CSA 22-2 n°14, IACS E10	
Product certifications			UL, CSA,BV, LROS, DNV, GL, RINA, ABS, RMRos, NOM, CCC, C-TIC'K, ATEX, GOST, KERI *(1)*	
Rated insulation voltage of the outputs (Ui)	Conforming to IEC/EN 60947-1, overvoltage category III, degree of pollution 3	**V**	690	
	Conforming to UL 508, CSA C222 n° 14	**V**	690	
Rated impulse withstand voltage (Uimp)	Conforming to IEC/EN 60947-4-1			
	∼ 100…240 V supply, inputs and outputs	**kV**	4	4
	⎓ 24 V supply, inputs and outputs	**kV**	0.8	0.8
	Communication circuits	**kV**	0.8	–
	Current or voltage measurement circuit	**kV**	6	6
Short-circuit withstand	Conforming to IEC/EN 60947-4-1	**kA**	100	
Protective treatment	Conforming to IEC/EN 60068		"TH"	
	Conforming to IEC/EN 60068-2-30		12 x 24 hour cycles	
	Conforming to IEC/EN 60070-2-11	**h**	48	
Ambient air temperature around the device	Storage	**°C**	- 40…+80	
	Operation	**°C**	- 20…+60	
Operating position without dating	In relation to normal vertical mounting plane		± 30° in relation to mounting plate, ± 90° 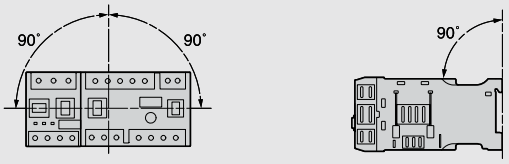	
Flame resistance	Conforming to UL 94	**°C**	960 (for parts supporting live components)	
	Conforming to IEC/EN 60695-2-12	**°C**	650 (for other parts)	
Shock resistance (1/2 sine wave, 11 ms)	Conforming to IEC/EN 60068-2-27 *(2)*		15 gn	
Vibration resistance	Conforming to IEC/EN 60068-2-6 *(2)* 5…300 Hz		4 gn (plate mounted) 1 gn (mounted on ⊥ rail)	
Resistance to electrostatic discharge	Conforming to IEC/EN 61000-4-2	**kV**	In open air: 8 - Level 3 On contact: 6 - Level 3	
Immunity to radiated electromagnetic interference	Conforming to IEC 61000-4-3	**V/m**	10 - Level 3	
Immunity to fast transient bursts	Conforming to IEC 61000-4-4	**kV**	On supply and relay outputs: 4 - Level 4 Other circuits: 2 - Level 3	
Immunity to radioelectric fields	Conforming to IEC/EN 61000-4-6	**V**	10 - Level 3	

Immunity to dissipated shock waves	Conforming to IEC/EN 61000-4-5		**Common mode**	**Serial mode**	**Common mode**	**Serial mode**
	Relay outputs and supply	**kV**	4	2	–	–
	⎓ 24 V inputs	**kV**	1	1	1	1
	∼ 100…240 V inputs	**kV**	2	1	2	1
	Voltage inputs	**kV**	–	–	4	2
	Communication	**kV**	2	–	2	–
	Temperature sensor (IT1/IT2)	**kV**	1	0.5	–	–

Altitude derating			**2000 m**	**3000 m**	**3500 m**	**4000 m**	**4500 m**
	Rated operational voltage (Ui)		1	0.93	0.87	0.8	0.7
	Max. operating temperature		1	0.93	0.92	0.9	0.88

Controller and extension module characteristics

Product type			Controllers		Extension modules	
			LTM R•••BD	LTM R•••FM	LTM EV40BD	LTM EV40FM
Control supply						
Operational voltage (U)	Conforming to IEC/EN 60947-1	V	⎓ 24	∿ 100…240	–	
Resistance to voltage dips	Conforming to IEC/EN 61000-4-11	V	0 for 3 ms 70% of U for 500 ms		–	
Associated protection		A	gG fuse, 0.5		–	
Operational voltage		V	⎓ 20.4…26.24	∿ 93.5…264	–	
Current consumption	50/60 Hz	mA	⎓ 56…127	∿ 8…62.8	–	
Cabling						
Connectors	Pitch	mm	5.08		5.08	
Flexible cable without cable end	1 conductor	mm²	0.2…2.5		0.2…2.5	
	2 identical conductors	mm²	0.2…1.5		0.2…1.5	
Flexible cable with cable end						
Without insulated ferrule	1 conductor	mm²	0.25…2.5		0.25…2.5	
	2 identical conductors	mm²	0.5…1.5		0.5…1.5	
With insulated ferrule	1 conductor	mm²	0.25…2.5		0.25…2.5	
	2 identical conductors	mm²	0.2…1		0.2…1	
Solid cable without cable end	1 conductor	mm²	0.2…2.5		0.2…2.5	
	2 identical conductors	mm²	0.2…1		0.2…1	
Conductor size			AWG 24 to AWG 14		AWG 24 to AWG 14	
Tightening torque		N.m	0.5…0.6		0.5…0.6	
Flat screwdriver		mm	3		3	
Input characteristics						
Nominal values	Conforming to IEC/EN 61131-1		Type 1 positive logic (⎓: resistive, ∿: capacitive)			
	Voltage	V	⎓ 24	∿ 100…240	⎓ 24	∿ 100…240
	Current	mA	⎓ 7	∿ 3.1 for 100 V ∿ 7.5 for 240 V	⎓ 7	∿ 3.1 for 100 V ∿ 7.5 for 240 V
Logic inputs	Logic state 1 – Voltage	V	15 max	79 < U < 264	15 max	79 < U < 264
	Logic state 1 – Current	mA	2 min…15 max	2 min at 110 V… 3 min at 220 V	2 min…15 max	2 min at 110 V… 3 min at 220 V
	Logic state 0 – Voltage	V	5 max	0 < U < 40	5 max	0 < U < 40
	Logic state 0 – Current	mA	15 max	15 max	15 max	15 max
Response time	Change to state 1	ms	15	25	15	25
	Change to state 0	ms	5	25	5	25
Output characteristics						
Type			Volt free, single break			
Load	∿		250 V / 5 A B300			
	⎓		30 V / 5 A			
Permissible power in cat. AC-15	For 500 000 operating cycles	VA	480 / Ie max: 2 A			
Permissible power in cat. DC-13	For 500 000 operating cycles	W	30 / Ie max: 1.25 A			
Associated protection		A	gG fuse, 4			
Max. frequency		Hz	2			
Max. operating level		op. cycles/h	1800			
Response time	Change to state 1	ms	10 max			
	Change to state 0	ms	10 max			
Measurement details						
Current			1 % for the 0.4…8 A and 1.35…27 A ranges 2 % for the 5…100 A range			
Voltage			1% from 100 to 830 V			
Earth fault current	Internal measurement without earth fault toroid		5…15 % for current > 0.1 A in the 0.4…8 A range current > 0.2 A in the 1.35…27 A range current > 0.3 A in the 5…100 A range			
	External measurement with earth fault toroid		< 5 % or 0.01 A			
Temperature measurement			2 %			
Power factor			3 % for a Cos φ > 0.6			
Active and reactive power			5 % (typical value)			
Internal clock			± 30 min / year			

Bus and network characteristics

Type of bus/network	Modbus	CANopen	DeviceNet	Profibus DP	Ethernet
Physical interface	2-wire RS 485	ISO 11898	ISO 11898	polarised 2-wire RS 485	IEEE 802.3
Addressing	1 to 247	1 to 127	1 to 64	1 to 125	0 to 159
Transmission speeds	1.2 to 19.2 K bits/s	10, 20, 50, 125, 250, 500, 800 and 1000 K bits/s + Auto baud	125 to 500 K bits/s	9.6 K to 12 M bits/s	10/100 Mbit/s, with automatic recognition
Connections	RJ45/terminal block	9-way SUB-D/ terminal block	Terminal block	9-way SUB-D/ terminal block	RJ45
Cables	2 shielded twisted pairs	4 twisted, shielded wires	4 twisted, shielded wires	2 shielded twisted pairs, type A	2 shielded twisted pairs

LTM CU operator control unit

Environment

Conforming to standards			IEC/EN 61131-2, UL 508, CSA 22-2 n°14
Product certifications			UL, CSA, CE, C-TIC'K, NOM, GOST
Ambient air temperature around the device	Storage	**°C**	-40…+80
	Operation	**°C**	-20…+60
Relative humidity			15…95 % without condensation
Protective treatment	Conforming to IEC/EN 60068-2-30		12 x 24 hour cycles
Degree of protection	Conforming to IEC 60947-1		IP 54
Shock resistance	Conforming to IEC/EN 60068-2-27		15 gn / 11ms
Vibration resistance	Conforming to IEC/EN 60068-2-6 5…30 Hz		4 gn
Flame resistance	Conforming to IEC 60947-1	**°C**	650
	Conforming to UL 94		V2

Electrical characteristics

Supply to the product			Powered via the controller
Maximum current		**mA**	140
Maximum power dissipated		**W**	1
Resistance to electromagnetic discharge	Conforming to IEC/EN 61000-4-2	**kV**	In open air: 8. Level 3 On contact: 4. Level 3
Immunity to radiated electromagnetic interference	Conforming to IEC/EN 61000-4-3	**V/m**	10 - Level 3
Immunity to fast transient bursts	Conforming to IEC/EN 61000-4-4	**kV**	2, shielded access. Level 3
Immunity to radioelectric fields	Conforming to IEC/EN 61000-4-6	**V**	10. Level 3
Immunity to shock waves	Conforming to IEC/EN 61000-4-5	**kV**	2, shielded access. Level 3

Physical characteristics

Mounting			Flush mounted
Display			Backlit LCD
Signalling			By 4 LEDs
Cabling			RJ45

LT6 CT●●●● external current transformer characteristics

Conforming to standards		IEC 60185, BS 7626			
Precision		Class 5P			
Precision limit factor		15			
Rated insulation voltage (Ui)		690			
Maximum operating temperature	**°C**	50			
Transformer ratio	**A**	100/1	200/1	400/1	800/1
Diameter of conductor passage hole	**mm**	35	35	35	35
Maximum cabling c.s.a.	**mm²**	30 x 10	30 x 10	30 x 10	incorporated *(1)*

Earth fault toroid characteristics

Toroid type		**50437**	**50438**	**50439**	**50440**	**50441**	**50442**	**50485**	**50486**
Rated insulation voltage Ui	**V**	1000							
Operating temperature	**°C**	- 35…+ 70							
Protection index		IP30 (connections IP20)							
Transformer ratio		1/1000							
Rated operational current Ie	**A**	65	85	160	250	400	630	85	250
Max. conductor c.s.a. per phase	**mm²**	25	50	95	240	2 x 185	2 x 240	50	240

DA1 TT●● probe characteristics

Conforming to standards			IEC 60034-11 mark A
Economy resistor	At 25 °C	Ω	3 x 250 in series
Rated operational voltage (Ue)	Per probe	**V**	⎓ 2.5 max
Rated insulation voltage (Ui)		**kV**	2.5
Insulation			Reinforced
Length of connecting cables	Between probes	**mm**	250
	Between probe and motor terminal plate	**m**	1

Guaranteed operating zones: example with 3 probes type DA1 TT●●● (250 Ω at 25 °C) in series, conforming to standard EC 60034-11, mark A.

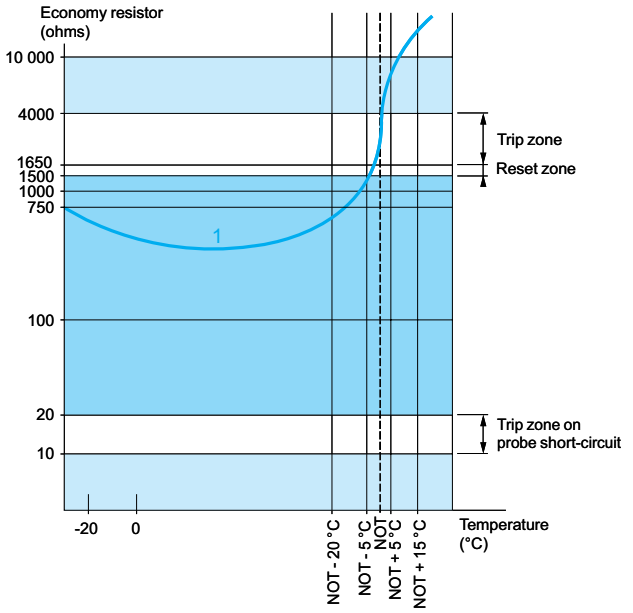

1 3 probes type DA1●●● (250 Ω at 25 °C) in series.

NOT: Nominal Operating Temperature.

Protection unit tripped.

Protection unit reset.

(1) Electrical connection to be made using M10 bolt.

Cold state curves

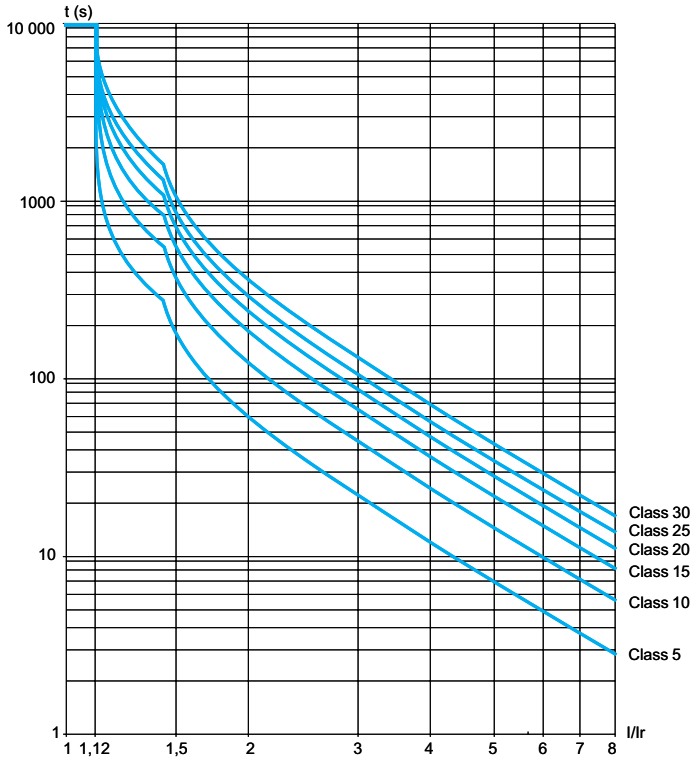

Hot state curves

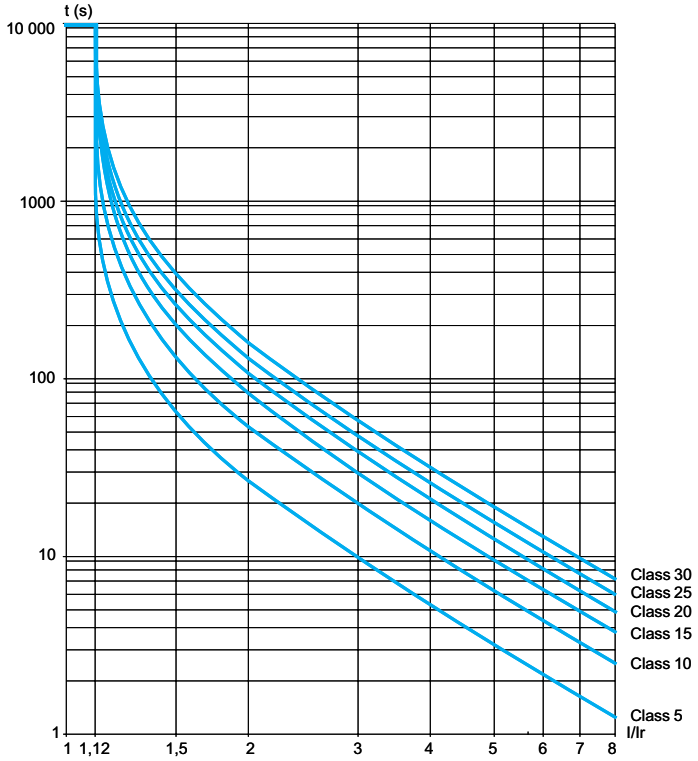

TeSys protection components

TeSys T Motor Management System

526387

LTM R08MBD

526388

LTM R08CBD

526389

LTM R08DBD

526390

LTM R08PBD

526391

LTM R08EBD

Controllers

Setting range	Control voltage	Current range	Reference	Weight
A	V	A		kg
For Modbus				
8	⎓ 24	0.4…8	**LTM R08MBD**	0.530
	∼ 100…240 V	0.4…8	**LTM R08MFM**	0.530
27	⎓ 24	1.35…27	**LTM R27MBD**	0.530
	∼ 100…240 V	1.35…27	**LTM R27MFM**	0.530
100	⎓ 24	5…100	**LTM R100MBD**	0.530
	∼ 100…240 V	5…100	**LTM R100MFM**	0.530
For CANopen				
8	⎓ 24	0.4…8	**LTM R08CBD**	0.530
	∼ 100…240 V	0.4…8	**LTM R08CFM**	0.530
27	⎓ 24	1.35…27	**LTM R27CBD**	0.530
	∼ 100…240 V	1.35…27	**LTM R27CFM**	0.530
100	⎓ 24	5…100	**LTM R100CBD**	0.530
	∼ 100…240 V	5…100	**LTM R100CFM**	0.530
For DeviceNet				
8	⎓ 24	0.4…8	**LTM R08DBD**	0.530
	∼ 100…240 V	0.4…8	**LTM R08DFM**	0.530
27	⎓ 24	1.35…27	**LTM R27DBD**	0.530
	∼ 100…240 V	1.35…27	**LTM R27DFM**	0.530
100	⎓ 24	5…100	**LTM R100DBD**	0.530
	∼ 100…240 V	5…100	**LTM R100DFM**	0.530
For Profibus DP				
8	⎓ 24	0.4…8	**LTM R08PBD**	0.530
	∼ 100…240 V	0.4…8	**LTM R08PFM**	0.530
27	⎓ 24	1.35…27	**LTM R27PBD**	0.530
	∼ 100…240 V	1.35…27	**LTM R27PFM**	0.530
100	⎓ 24	5…100	**LTM R100PBD**	0.530
	∼ 100…240 V	5…100	**LTM R100PFM**	0.530
For Ethernet TCP/IP				
8	⎓ 24	0.4…8	**LTM R08EBD**	0.530
	∼ 100…240 V	0.4…8	**LTM R08EFM**	0.530
27	⎓ 24	1.35…27	**LTM R27EBD**	0.530
	∼ 100…240 V	1.35…27	**LTM R27EFM**	0.530
100	⎓ 24	5…100	**LTM R100EBD**	0.530
	∼ 100…240 V	5…100	**LTM R100EFM**	0.530

526380

LTM EV40BD

568605

LTM CU

Extension modules. with voltage measurement on the 3 phases

Input control voltage	Number of inputs	Supply to the electronics	Reference	Weight
V				kg
⎓ 24	4	Via the controller	**LTM EV40BD**	0.210
∼ 100…240	4	Via the controller	**LTM EV40FM**	0.210

HMI terminals

Description	Supply Voltage	Reference	Weight kg
Operator control unit	Supply via the controller	**LTM CU**	0.400
Magelis compact display.	⎓ 24 V external	**XBT N410**	0.380

Description	Number and type of connectors	Length m	Reference	Weight kg
Connecting cables for the LTM CU control unit	2 x RJ45	1	**VW3 A1 104R10**	0.065
		3	**VW3 A1 104R30**	0.140
		5	**VW3 A1 104R50**	0.210
Connecting cables for the XBT N410	SUB-D 25-way female RJ45	2.5	**XBT Z938**	0.200

Cables

Description	Number and type of connectors	Length m	Reference	Weight kg
Connecting cables For connecting the controller to the extension module	2 x RJ45	0.04	**LTM CC004** *(1)*	0.120
		0.3	**LU9 R03**	0.045
		1	**LU9 R10**	0.065

Replacement connectors

Description	Number and type of connectors	Reference	Weight kg
Complete set of connectors for controllers and extension modules	10 screw terminals (all network versions included)	**LTM 9TCS**	0.200

(1) Sold in lots of 6.

TeSys protection components
TeSys T Motor Management System

Configuration tools

Description	Composition	Reference	Weight kg
Connection kit for PC serial port for Modbus multidrop connection	■ 1 x 3 m length cable with two RJ45 connectors, ■ 1 RS 232/RS 485 converter with one 9-way female SUB-D connector and one RJ45 connector.	**VW3 A8 106**	–
Interface for USB port (for use with cable VW3 A8 106) Length: 1.8 m	■ 1 USB cable, SUB-D 9-way ■ Drivers supplied on CD-Rom	**SR2 CBL06**	0.350

526392

LT6 CT4001

Current transformers *(1)*

Operational current Primary	Secondary	Reference	Weight
A	A		kg
100	**1** *(2)*	**LT6 CT1001**	0.550
200	**1** *(2)*	**LT6 CT2001**	0.550
400	**1** *(2)*	**LT6 CT4001**	0.550
800	**1** *(2)*	**LT6 CT8001**	0.680

Earth fault toroids (marketed under the Schneider Electric brand)

Rated operational current Ie	Internal Ø of toroid	Reference	Weight
A	mm		kg
Closed toroids, type A			
65	30	**50437**	0.120
85	50	**50438**	0.200
160	80	**50439**	0.420
250	120	**50440**	0.530
400	200	**50441**	1.320
630	300	**50442**	2.230
Split toroids, type OA			
85	46	**50485**	1.300
250	110	**50486**	3.200

6

510575

DA1 TT●●●

PTC thermistor probes *(3)*

Description	Nominal Operating Temperature (NOT)	Colour	Unit reference *(4)*	Weight
	°C			kg
Triple probes	90	Green/green	**DA1 TT090**	0.010
	110	Brown/brown	**DA1 TT110**	0.010
	120	Grey/grey	**DA1 TT120**	0.010
	130	Blue/blue	**DA1 TT130**	0.010
	140	White/blue	**DA1 TT140**	0.010
	150	Black/black	**DA1 TT150**	0.010
	160	Blue/red	**DA1 TT160**	0.010
	170	White/green	**DA1 TT170**	0.010

(1) The transformers offered for use with TeSys U controllers are suitable (see page 6/64).
(2) For use with LTM R08●● controllers.
(3) PTC: Positive Temperature Coefficient.
(4) Sold in lots of 10.

Schneider Electric

TeSys protection components

TeSys T Motor Management System

Marking accessories (to be ordered separately)

Description	Composition	Sold in lots of	Unit reference	Weight kg
Clip-in markers (maximum of 5 per unit)	Strips of 10 identical numbers (0 to 9)	25	**AB1 R●** *(1)*	0.002
	Strips of 10 identical capital letters (A to Z)	25	**AB1 G●** *(1)*	0.002

Connection accessories

Description		Length m	Reference	Weight kg
For Modbus connection				
Cables fitted with 2 x RJ45 connectors		0.3	**VW3 A8 306 R03**	0.045
		1	**VW3 A8 306 R10**	0.065
		3	**VW3 A8 306 R30**	0.125
T-junctions		0.3	**VW3 A8 306 TF03**	0.032
		1	**VW3 A8 306 TF10**	0.032
RS 485 line terminator		–	**VW3 A8 306 R**	0.012
For CANopen connection *(2)*				
Cables		50	**TSX CAN CA50**	4.930
		100	**TSX CAN CA100**	8.800
		300	**TSX CAN CA300**	24.560
IP20 connectors SUB-D 9-way female Line end adapter switch	Elbowed (90°)	–	**TSX CAN KCDF 90T**	0.046
	Straight	–	**TSX CAN KCDF 180T**	0.049
	Elbowed (90°) with SUB-D 9-way connector for connection to PC or diagnostic tool	–	**TSX CAN KCDF 90TP**	0.051
For DeviceNet connection				
Cables		50	**TSX CAN CA50**	4.930
		100	**TSX CAN CA100**	8.800
		300	**TSX CAN CA300**	24.560
For Profibus DP connection				
Cables		100	**TSX PBSCA100**	–
		400	**TSX PBSCA400**	–
Connectors	With line terminator	–	**490 NAD 911 03**	–
	Without line terminator	–	**490 NAD 911 04**	–
	With line terminator and terminal port	–	**490 NAD 911 05**	–
For Ethernet TCP/IP connection				
Shielded twisted pair cables to standard EIA/TIA568				
Cables fitted with 2 x RJ45 connectors for connection to terminal equipment	Straight	2	**490 NTW 000 02**	–
		5	**490 NTW 000 05**	–
		12	**490 NTW 000 12**	–
		40	**490 NTW 000 40**	–
		80	**490 NTW 000 80**	–
Shielded twisted pair cables, UL and CSA 22.1 approved				
Cables fitted with 2 x RJ45 connectors for connection to terminal equipment	Straight	2	**490 NTW 000 02U**	–
		5	**490 NTW 000 05U**	–
		12	**490 NTW 000 12U**	–
		40	**490 NTW 000 40U**	–
		80	**490 NTW 000 80U**	–

(1) When ordering, replace the ● in the reference with the number or letter required.
(2) To order other connectors and cables (UL cables for harsh environments, etc.) please consult our catalogue "Machines and installations with CANopen. Performance and flexibility".

LTM R●● controllers

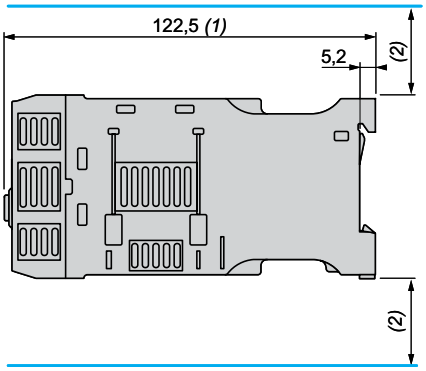

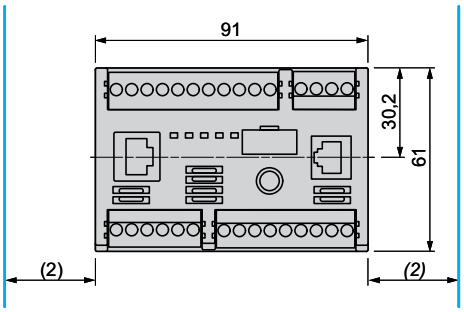

LTM EV40●● extension modules

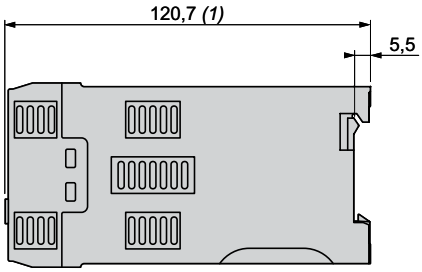

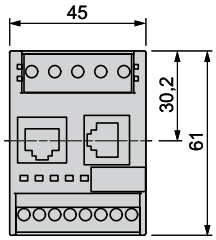

LTM CU operator control unit

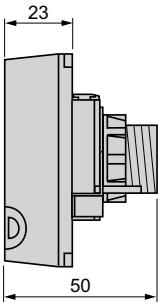

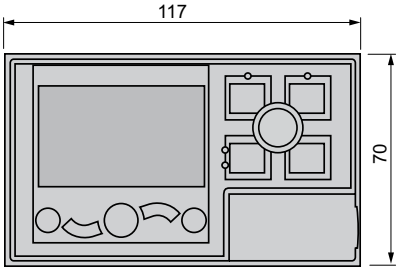

Panel mounting, cut-out

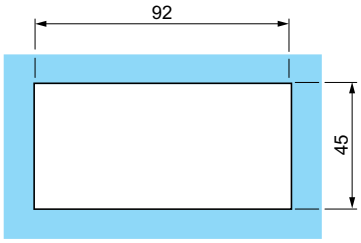

(1) 140 mm with RJ45 connector for connection to extension module and to network,
166 mm with Profibus DP/CANopen connector.
(2) Leave a gap around the device of: 9 mm at 45 °C, 9 to 40 mm from 45 to 50 °C, 40 mm at 60 °C.

Current transformers

LT6 CT

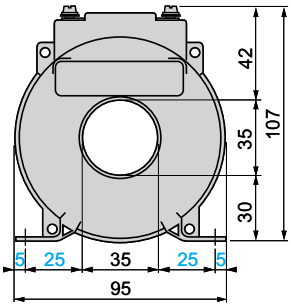

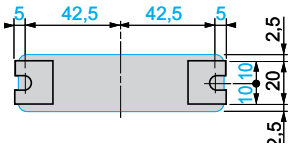

HMI terminal

XBT N410

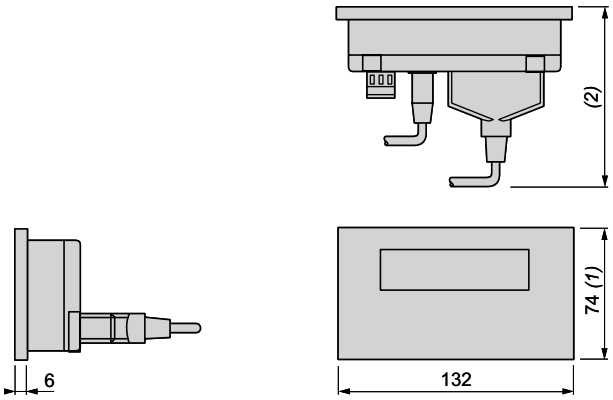

(1) 104 mm with fixing clips (supplied with the product).
*(2) 58 mm with SUB-D 25-way elbowed cable **XBT Z9680** for Twido, TSX Micro and Premium or **XBT Z998** for Advantys STB.*
*104 mm with SUB-D 25-way cable **XBT Z68/Z9681** for Twido, TSX Micro and Premium*

Earth fault toroids

50437 and 50438

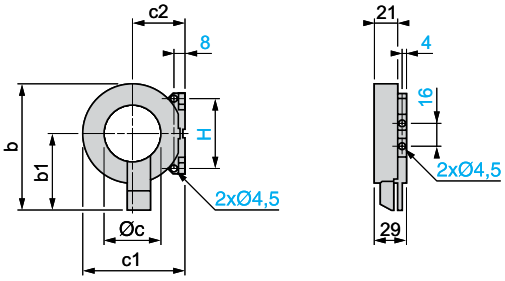

Type	b	b1	Øc	c1	c2	H
50437	83	53	30	60	31	50
50438	109	66	50	87	45	60

50439, 50440 and 50441

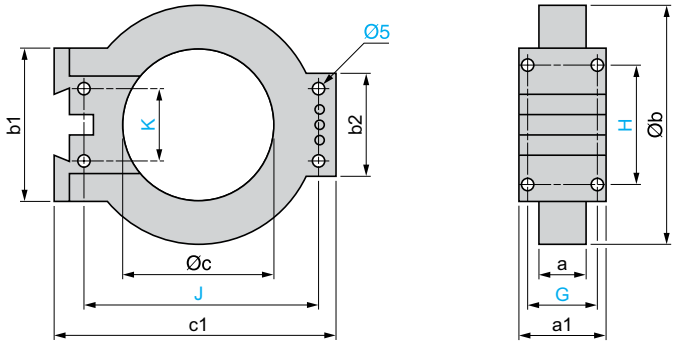

Type	a	a1	Øb	b1	b2	Øc	c1	G	H	J	K
50439	26.5	44	122	80	55	80	150	35	65	126	40
50440	26.5	44	164	80	55	120	190	35	65	166	40
50441	29	46	256	120	90	196	274	37	104	254	60

50442

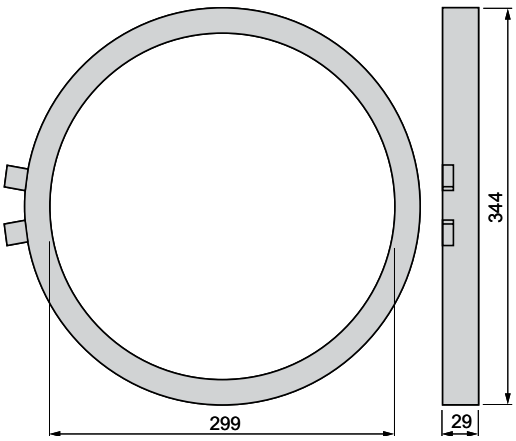

50485 and 50486

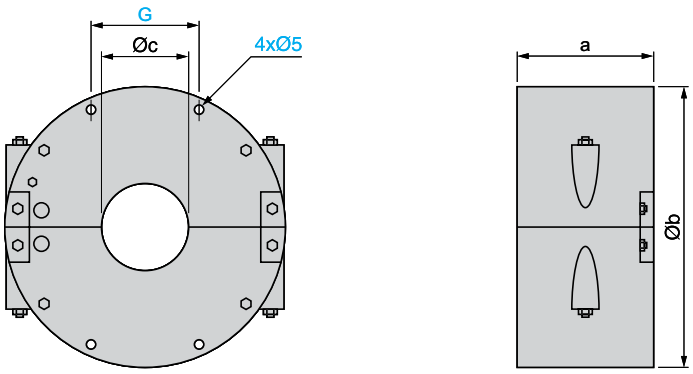

Type	a	Øb	Øc	G
50485	72	148	46	57
50486	78	224	110	76

Schemes

Overload mode

3-wire local-control

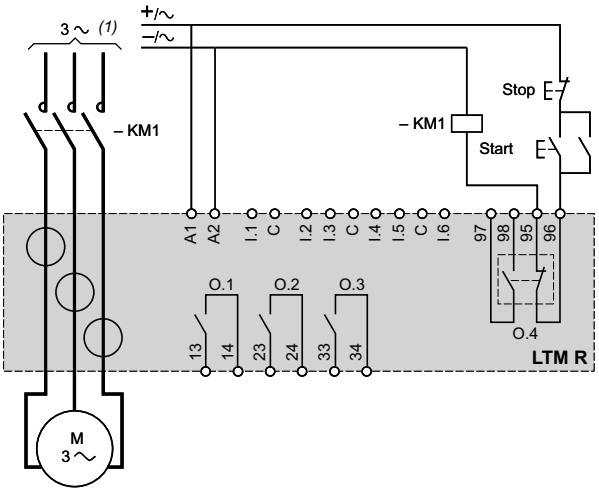

(1) Connection of a single-phase motor is possible. In this case, do not use the central current transformer.

Independent mode

3-wire local-control\

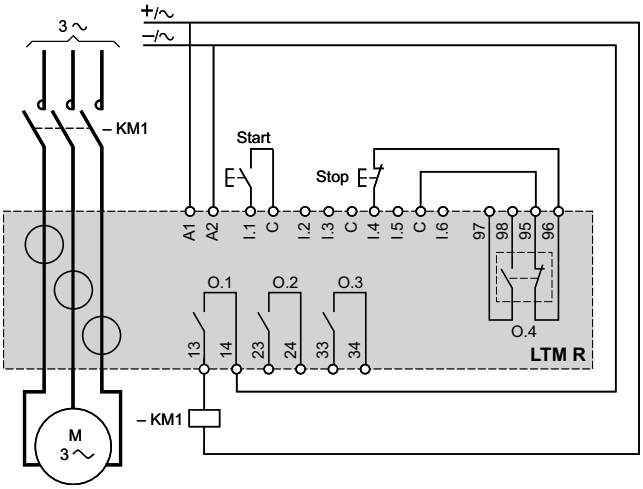

2-wire local-control

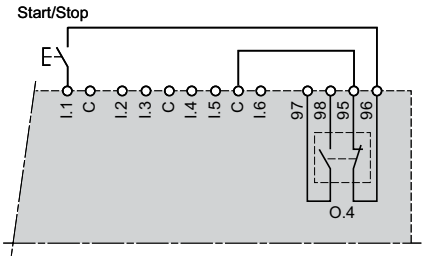

3-wire with switchable local/network control

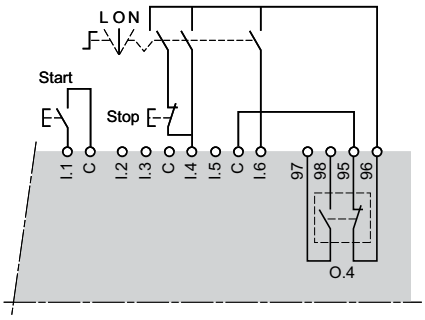

2-wire with switchable local/network control

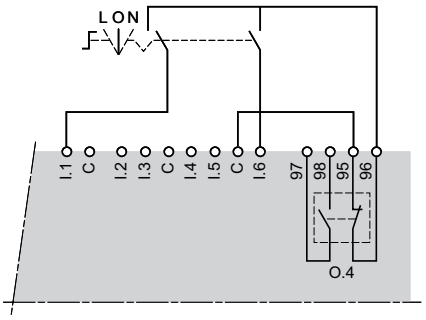

L : Local control
O : Stop
N : Network control

Schemes (continued)

Reverser mode

3-wire local-control

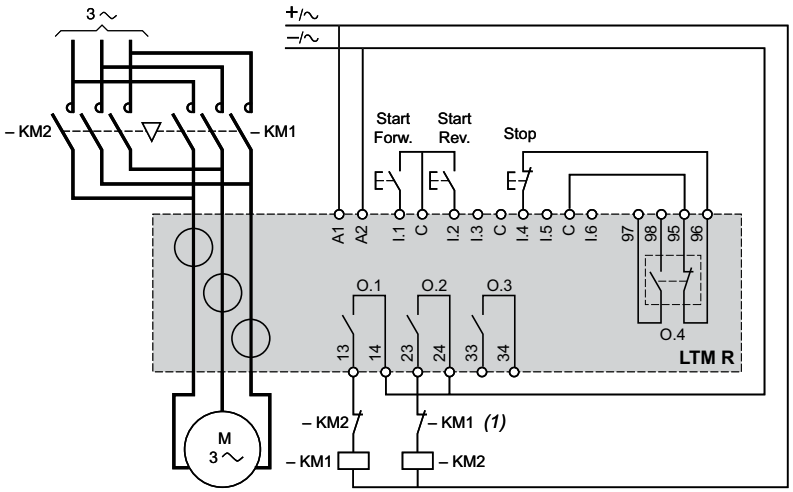

2-step mode, star-delta application

3-wire local-control

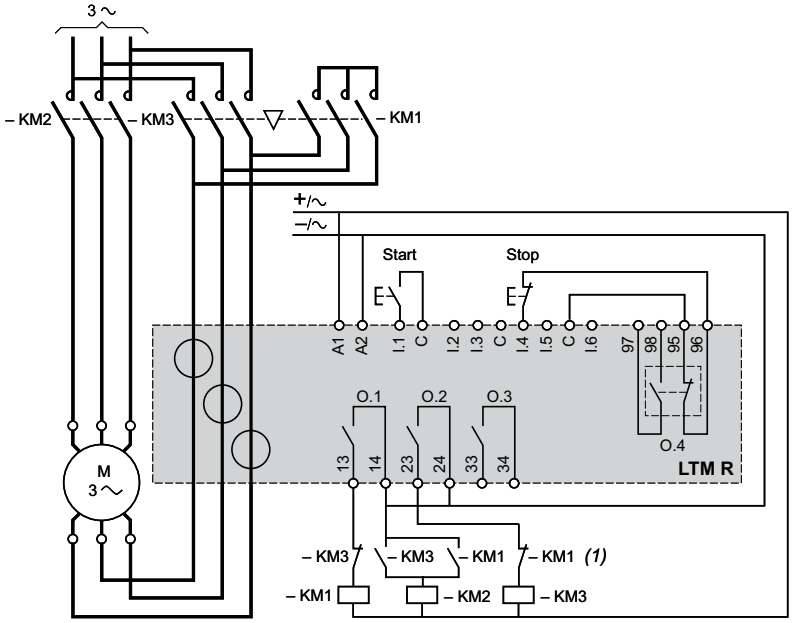

(1) Contacts for interlocking KM1 and KM2 are not obligatory because the controller electronically interlocks outputs O.1 and O.2.

Schemes (continued)

2-step mode, primary resistor application

3-wire local-control

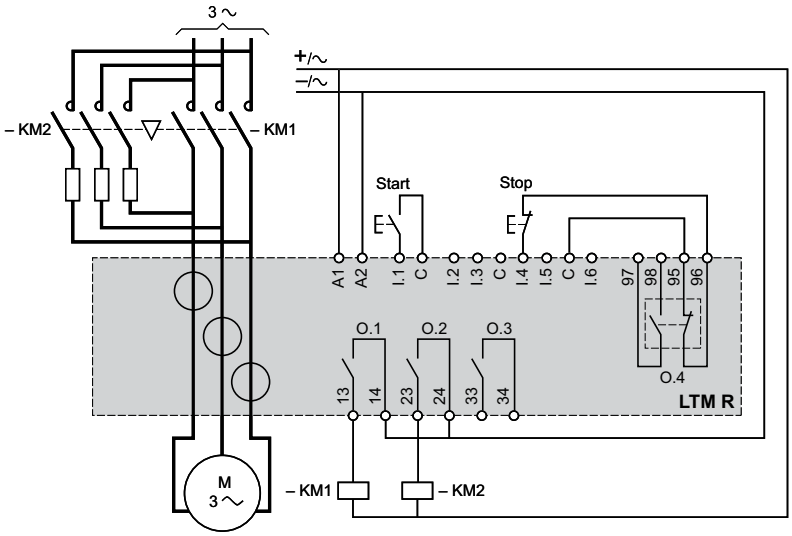

2-speed mode, Dahlander application

3-wire local-control

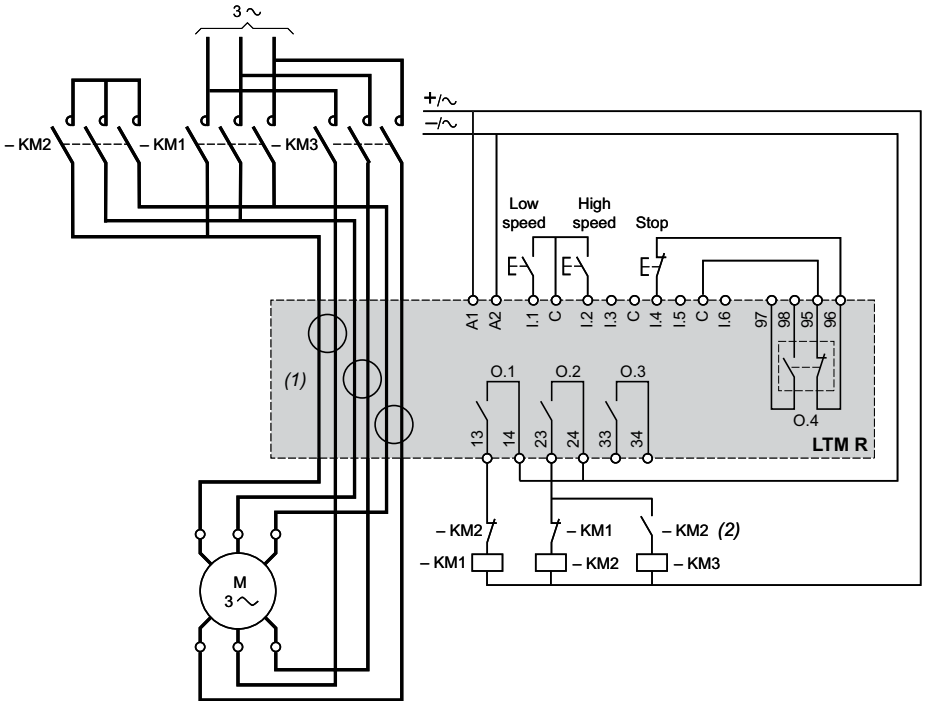

(1) For a Dahlander application, all the power cables must pass through current transformers. The controller can also be placed upstream of the contactor. In this case, and if the Dahlander motor is used in "variable torque" mode, all the cables downstream of the contactors must be of identical size.
(2) Contacts for interlocking KM1 and KM2 are not obligatory because the controller electronically interlocks outputs O.1 and O.2.

Schemes (continued)

Earth fault toroid and motor temperature probe connection

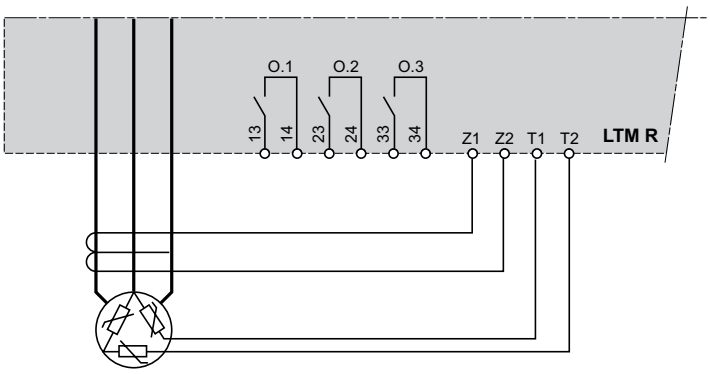

Connection of outputs for motor control mode function

Without intermediate relay

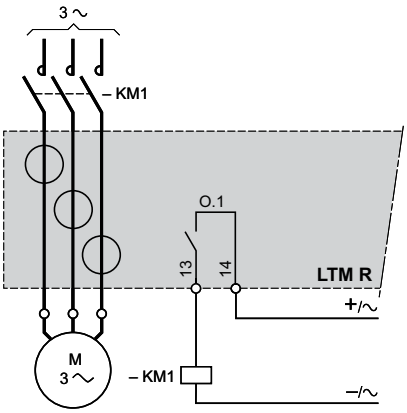

With intermediate relay

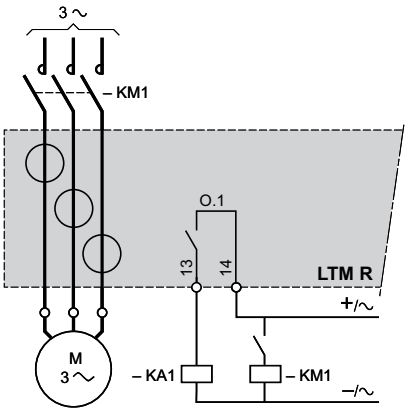

0.37 to 355 kW at 400/415 V: type 2 coordination

With switch-disconnector, contactor and class 10 controller

Standard power ratings of 3-phase motors 50/60 Hz in category AC-3 400/415 V		Switch-disconnector	aM fuses		Contactor	TeSys T controller	External current transformer
P	Ie	Reference *(1)*	Size	Rating	Reference *(2)*	Reference	Reference
kW	A			A			
0.37	1.1	**GS1 DD**	10 x 38	2	**LC1 D09**	**LTM R08●●**	–
0.55	1.5	**GS1 DD**	10 x 38	2	**LC1 D09**	**LTM R08●●**	–
0.75	1.9	**GS1 DD**	10 x 38	4	**LC1 D09**	**LTM R08●●**	–
1.1	2.7	**GS1 DD**	10 x 38	4	**LC1 D09**	**LTM R08●●**	–
1.5	3.6	**GS1 DD**	10 x 38	4	**LC1 D09**	**LTM R08●●**	–
2.2	4.9	**GS1 DD**	10 x 38	6	**LC1 D09**	**LTM R08●●**	–
3	6.5	**GS1 DD**	10 x 38	8	**LC1 D09**	**LTM R27●●**	–
4	8.5	**GS1 DD**	10 x 38	10	**LC1 D09**	**LTM R27●●**	–
5.5	11.5	**GS1 DD**	10 x 38	16	**LC1 D12**	**LTM R27●●**	–
7.5	15.5	**GS1 DD**	10 x 38	16	**LC1 D25**	**LTM R27●●**	–
10	19	**GS● F**	14 x 51	25	**LC1 D25**	**LTM R27●●**	–
11	22	**GS● F**	14 x 51	25	**LC1 D25**	**LTM R27●●**	–
15	29	**GS● F**	14 x 51	32	**LC1 D32**	**LTM R100●●**	–
18.5	35	**GS● F**	14 x 51	40	**LC1 D40A**	**LTM R100●●**	–
22	41	**GS● J**	22 x 58	50	**LC1 D50A**	**LTM R100●●**	–
30	55	**GS● J**	22 x 58	80	**LC1 D65A**	**LTM R100●●**	–
37	66	**GS● J**	22 x 58	100	**LC1 D80**	**LTM R100●●**	–
45	80	**GS● J**	22 x 58	100	**LC1 D95**	**LTM R100●●**	–
55	97	**GS● K**	T00	125	**LC1 D115**	**LTM R08●●**	**LT6 CT2001**
75	132	**GS● L**	T0	160	**LC1 D150**	**LTM R08●●**	**LT6 CT2001**
90	160	**GS● N**	T1	200	**LC1 F185**	**LTM R08●●**	**LT6 CT2001**
110	195	**GS● N**	T1	250	**LC1 F225**	**LTM R08●●**	**LT6 CT4001**
132	230	**GS● QQ**	T2	315	**LC1 F265**	**LTM R08●●**	**LT6 CT4001**
160	280	**GS● QQ**	T2	355	**LC1 F400**	**LTM R08●●**	**LT6 CT4001**
200	350	**GS2 S**	T3	500	**LC1 F400**	**LTM R08●●**	**LT6 CT8001**
250	430	**GS2 S**	T3	500	**LC1 F500**	**LTM R08●●**	**LT6 CT8001**
315	540	**GS2 S**	T3	630	**LC1 F630**	**LTM R08●●**	**LT6 CT8001**
355	610	**GS2 V**	T4	800	**LC1 F630**	**LTM R08●●**	**LT6 CT8001**

(1) GS●: GS1 for direct operator, GS2 for external operator.
(2) For reversing operation, replace the prefix LC1 with LC2.

0.06 to 250 kW at 400/415 V: type 2 coordination

With circuit-breaker, contactor and class 10 controller

Standard power ratings of 3-phase motors 50/60 Hz in category AC-3 400/415 V			Circuit-breaker	Contactor	TeSys T controller	External current transformer
P	Ie	Icc	Reference	Reference	Reference	Reference
kW	A	kA				
0.06	0.2	130	**GV2 L03**	**LC1 D09**	**LTM R08●●**	–
0.09	0.3	130	**GV2 L03**	**LC1 D09**	**LTM R08●●**	–
0.12	0.44	130	**GV2 L04**	**LC1 D09**	**LTM R08●●**	–
0.18	0.6	130	**GV2 L04**	**LC1 D09**	**LTM R08●●**	–
0.25	0.85	130	**GV2 L05**	**LC1 D09**	**LTM R08●●**	–
0.37	1.1	130	**GV2 L05**	**LC1 D09**	**LTM R08●●**	–
0.55	1.5	130	**GV2 L06**	**LC1 D09**	**LTM R08●●**	–
0.75	1.9	130	**GV2 L07**	**LC1 D09**	**LTM R08●●**	–
1.1	2.7	130	**GV2 L07**	**LC1 D18**	**LTM R08●●**	–
1.5	3.6	130	**GV2 L08**	**LC1 D18**	**LTM R08●●**	–
2.2	4.9	130	**GV2 L10**	**LC1 D18**	**LTM R08●●**	–
3	6.5	130	**GV2 L14**	**LC1 D18**	**LTM R08●●**	–
4	8.5	130	**GV2 L14**	**LC1 D18**	**LTM R27●●**	–
5.5	11.5	130	**GV2 L16**	**LC1 D25**	**LTM R27●●**	–
7.5	15.5	50	**GV2 L20**	**LC1 D25**	**LTM R27●●**	–
9	18.1	50	**GV2 L22**	**LC1 D25**	**LTM R27●●**	–
11	22	50	**GV2 L22**	**LC1 D25**	**LTM R27●●**	–
15	29	50	**GV3 L32**	**LC1 D40A**	**LTM R100●●**	–
18.5	35	50	**GV3 L40**	**LC1 D50A**	**LTM R100●●**	–
22	41	50	**GV3 L50**	**LC1 D50A**	**LTM R100●●**	–
30	55	50	**GV3 L65**	**LC1 D65A**	**LTM R100●●**	–
37	66	70	**NS80HMA**	**LC1 D80**	**LTM R100●●**	–
45	80	25	**NS100HMA**	**LC1 D115**	**LTM R100●●**	–
45	80	70	**NS100HMA**	**LC1 D115**	**LTM R100●●**	–

0.06 to 250 kW at 400/415 V: type 2 coordination *(continued)*

With circuit-breaker, contactor and class 10 controller

Standard power ratings of 3-phase motors 50/60 Hz in category AC-3 400/415 V			Circuit-breaker	Contactor	TeSys T controller	External current transformer
P	Ie	Icc	Reference	Reference	Reference	Reference
kW	A	kA				
55	97	36	**NS160NMA**	**LC1 D115**	**LTM R08●●**	**LT6 CT2001**
55	97	70	**NS160HMA**	**LC1 D115**	**LTM R08●●**	**LT6 CT2001**
75	132	36	**NS160NMA**	**LC1 D150**	**LTM R08●●**	**LT6 CT2001**
75	132	70	**NS160HMA**	**LC1 D150**	**LTM R08●●**	**LT6 CT2001**
90	160	36	**NS250NMA**	**LC1 F185**	**LTM R08●●**	**LT6 CT2001**
90	160	70	**NS250HMA**	**LC1 F185**	**LTM R08●●**	**LT6 CT2001**
110	195	36	**NS250NMA**	**LC1 F225**	**LTM R08●●**	**LT6 CT2001**
110	195	70	**NS250HMA**	**LC1 F225**	**LTM R08●●**	**LT6 CT2001**
132	230	70	**NS400HMA**	**LC1 F265**	**LTM R08●●**	**LT6 CT4001**
132	230	130	**NS400LMA**	**LC1 F265**	**LTM R08●●**	**LT6 CT4001**
160	280	70	**NS400HMA**	**LC1 F330**	**LTM R08●●**	**LT6 CT4001**
160	280	130	**NS400LMA**	**LC1 F330**	**LTM R08●●**	**LT6 CT4001**
200	350	70	**NS630HMA**	**LC1 F400**	**LTM R08●●**	**LT6 CT4001**
200	350	130	**NS630LMA**	**LC1 F400**	**LTM R08●●**	**LT6 CT4001**
220	388	70	**NS630HMA**	**LC1 F500**	**LTM R08●●**	**LT6 CT4001**
220	388	130	**NS630LMA**	**LC1 F500**	**LTM R08●●**	**LT6 CT4001**
250	430	70	**NS630HMA**	**LC1 F500**	**LTM R08●●**	**LT6 CT6001**
250	430	130	**NS630LMA**	**LC1 F500**	**LTM R08●●**	**LT6 CT6001**

Substitution table

	Old range LT6 P multifunction protection relay			New range TeSys T controllers		
Motor current	Reference	Reference	External current transformer Reference	Reference	Reference	External current transformer Reference
	∼ 100…240 V	⎓ 24 V		∼ 100…240 V	⎓ 24 V	
I < 5 A	LT6 P0M005FM	LT6 P0M005S144	–	**LTM R08●FM**	**LTM R08●BD**	–
5 A < I < 25 A	LT6 P0M025FM	LT6 P0M025S144	–	**LTM R27●FM**	**LTM R27●BD**	–
25 A < I < 100 A	LT6 P0M005FM	LT6 P0M005S144	LT6 CT1001	**LTM R100●FM**	**LTM R100●BD**	–
100 A < I < 200 A	LT6 P0M005FM	LT6 P0M005S144	LT6 CT2001	**LTM R08●FM**	**LTM R08●BD**	**LT6 CT2001**
200 A < I < 400 A	LT6 P0M005FM	LT6 P0M005S144	LT6 CT4001	**LTM R08●FM**	**LTM R08●BD**	**LT6 CT4001**
400 A < I < 800 A	LT6 P0M005FM	LT6 P0M005S144	LT6 CT8001	**LTM R08●FM**	**LTM R08●BD**	**LT6 CT8001**

0.37 to 400 kW at 690 V: type 2 coordination

With switch-disconnector, contactor and class 10 controller

Standard power ratings of 3-phase motors 50/60 Hz in category AC-3		Switch-disconnector (1)	aM fuses		Contactor	TeSys T controller	External current tranformer
P	Ie	Reference	Size	Rating	Reference	Reference	Reference
kW	A			A			
0.37	0.64	**GS● F**	14 x 51	1	**LC1 D09**	**LTM R08●●**	–
0.55	0.87	**GS● F**	14 x 51	2	**LC1 D09**	**LTM R08●●**	–
0.75	1.1	**GS● F**	14 x 51	2	**LC1 D09**	**LTM R08●●**	–
1.1	1.6	**GS● F**	14 x 51	2	**LC1 D09**	**LTM R08●●**	–
1.5	2.1	**GS● F**	14 x 51	4	**LC1 D09**	**LTM R08●●**	–
2.2	2.8	**GS● F**	14 x 51	4	**LC1 D09**	**LTM R08●●**	–
3	3.8	**GS● F**	14 x 51	6	**LC1 D09**	**LTM R08●●**	–
4	4.9	**GS● F**	14 x 51	6	**LC1 D09**	**LTM R08●●**	–
5.5	6.7	**GS● F**	14 x 51	8	**LC1 D25**	**LTM R08●●**	–
7.5	8.9	**GS● F**	14 x 51	10	**LC1 D25**	**LTM R27●●**	–
11	12.8	**GS● F**	14 x 51	16	**LC1 D25**	**LTM R27●●**	–
15	17	**GS● G**	T000	20	**LC1 D32**	**LTM R27●●**	–
18.5	21	**GS● G**	T000	25	**LC1 D32**	**LTM R27●●**	–
22	24	**GS● G**	T000	32	**LC1 D40A**	**LTM R27●●**	–
30	32	**GS● G**	T000	40	**LC1 D50A**	**LTM R100●●**	–
37	39	**GS● J**	22 x 58	50	**LC1 D65A**	**LTM R100●●**	–
45	47	**GS● J**	22 x 58	63	**LC1 D80**	**LTM R100●●**	–
55	57	**GS● J**	22 x 58	80	**LC1 D115**	**LTM R100●●**	–
75	77	**GS● KK**	T00	100	**LC1 D115**	**LTM R100●●**	–
90	93	**GS● KK**	T00	125	**LC1 F150**	**LTM R08●●**	**LT6 CT2001**
110	113	**GS● KK**	T00	125	**LC1 F185**	**LTM R08●●**	**LT6 CT2001**
132	134	**GS● L**	T0	160	**LC1 F265**	**LTM R08●●**	**LT6 CT2001**
160	162	**GS● N**	T1	200	**LC1 F265**	**LTM R08●●**	**LT6 CT2001**
200	203	**GS● N**	T1	250	**LC1 F330**	**LTM R08●●**	**LT6 CT4001**
220	224	**GS● QQ**	T2	250	**LC1 F400**	**LTM R08●●**	**LT6 CT4001**
250	250	**GS● QQ**	T2	315	**LC1 F400**	**LTM R08●●**	**LT6 CT4001**
290	292	**GS● QQ**	T2	355	**LC1 F500**	**LTM R08●●**	**LT6 CT4001**
315	313	**GS● QQ**	T2	355	**LC1 F500**	**LTM R08●●**	**LT6 CT4001**
355	354	**GS2 S**	T3	400	**LC1 F630**	**LTM R08●●**	**LT6 CT4001**
400	400	**GS2 S**	T3	500	**LC1 F630**	**LTM R08●●**	**LT6 CT8001**

(1) GS●: GS1 for direct operator, GS2 for external operator.