advanced

Sonic Fast Recovery Diode

V_{RRM}	=	600 V
I_{FAV}	=	60 A
t_{rr}	=	35 ns

High Performance Fast Recovery Diode
Low Loss and Soft Recovery
Single Diode

Part number

DHG60I600HA

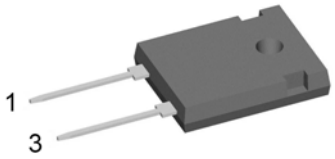

Backside: cathode

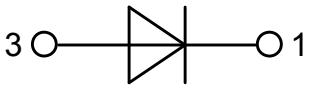

Features / Advantages:

- Planar passivated chips
- Very low leakage current
- Very short recovery time
- Improved thermal behaviour
- Very low Irm-values
- Very soft recovery behaviour
- Avalanche voltage rated for reliable operation
- Soft reverse recovery for low EMI/RFI
- Low Irm reduces:
  - Power dissipation within the diode
  - Turn-on loss in the commutating switch

Applications:

- Antiparallel diode for high frequency switching devices
- Antisaturation diode
- Snubber diode
- Free wheeling diode
- Rectifiers in switch mode power supplies (SMPS)
- Uninterruptible power supplies (UPS)

Package: TO-247

- Industry standard outline
- RoHS compliant
- Epoxy meets UL 94V-0

© 2013 IXYS all rights reserved

sales@prom-elec.com / ООО ПРОМЭЛЕКТРОНИКА

advanced

Fast Diode

Symbol	Definition	Conditions		Ratings min.	typ.	max.	Unit
V_{RSM}	*max. non-repetitive reverse blocking voltage*		T_{VJ} = 25°C			600	V
V_{RRM}	*max. repetitive reverse blocking voltage*		T_{VJ} = 25°C			600	V
I_R	*reverse current, drain current*	V_R = 600 V	T_{VJ} = 25°C			200	µA
		V_R = 600 V	T_{VJ} = 125°C			4	mA
V_F	*forward voltage drop*	I_F = 60 A	T_{VJ} = 25°C			2.39	V
		I_F = 120 A				3.30	V
		I_F = 60 A	T_{VJ} = 125°C			2.41	V
		I_F = 120 A				3.50	V
I_{FAV}	*average forward current*	T_C = 85°C rectangular d = 0.5	T_{VJ} = 150°C			60	A
V_{F0}	*threshold voltage* } *for power loss calculation only*		T_{VJ} = 150°C			1.20	V
r_F	*slope resistance*					19.5	mΩ
R_{thJC}	*thermal resistance junction to case*					0.3	K/W
R_{thCH}	*thermal resistance case to heatsink*				0.25		K/W
P_{tot}	*total power dissipation*		T_C = 25°C			415	W
I_{FSM}	*max. forward surge current*	t = 10 ms; (50 Hz), sine; V_R = 0 V	T_{VJ} = 45°C			430	A
C_J	*junction capacitance*	V_R = 400 V f = 1 MHz	T_{VJ} = 25°C		47		pF
I_{RM}	*max. reverse recovery current*	I_F = 60 A; V_R = 400 V	T_{VJ} = 25°C		24		A
			T_{VJ} = 125°C		tbd		A
t_{rr}	*reverse recovery time*	$-di_F/dt$ = 1200 A/µs	T_{VJ} = 25°C		35		ns
			T_{VJ} = 125°C		tbd		ns

© 2013 IXYS all rights reserved

advanced

Package TO-247			Ratings			
Symbol	Definition	Conditions	min.	typ.	max.	Unit
I_{RMS}	*RMS current*	per terminal			70	A
T_{stg}	*storage temperature*		-55		150	°C
T_{VJ}	*virtual junction temperature*		-55		150	°C
Weight				6		g
M_D	*mounting torque*		0.8		1.2	Nm
F_C	*mounting force with clip*		20		120	N

Product Marking

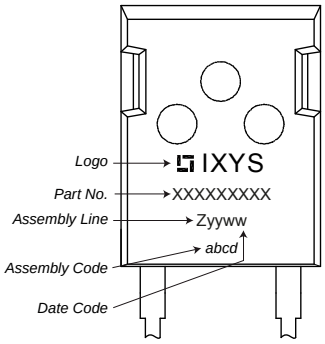

Part number

D = Diode
H = Sonic Fast Recovery Diode
G = extreme fast
60 = Current Rating [A]
I = Single Diode
600 = Reverse Voltage [V]
HA = TO-247AD (2)

Ordering	Part Number	Marking on Product	Delivery Mode	Quantity	Code No.
Standard	DHG60I600HA	DHG60I600HA	Tube	30	510214

Similar Part	Package	Voltage class
DPH30IS600HI	ISOPLUS247 (2)	600
DSEP60-06A	TO-247AD (2)	600
DSEP60-06AT	TO-268AA (D3Pak) (2)	600

Equivalent Circuits for Simulation ** on die level* T_{VJ} = 150 °C

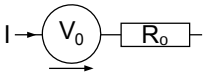

		Fast Diode	
$V_{0\,max}$	*threshold voltage*	1.2	V
$R_{0\,max}$	*slope resistance **	17	mΩ

© 2013 IXYS all rights reserved

Outlines TO-247

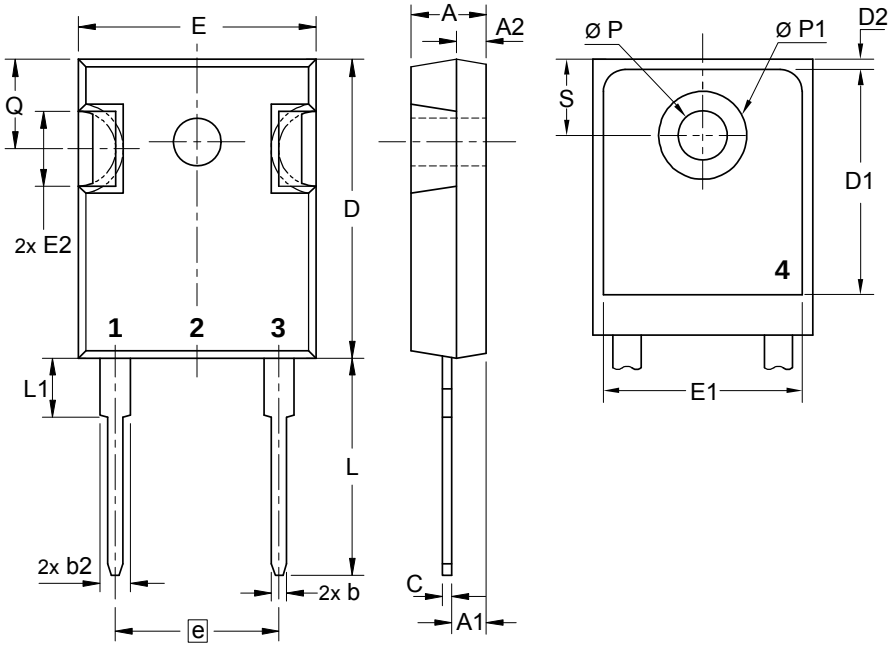

Sym.	Inches		Millimeter	
	min.	max.	min.	max.
A	0.185	0.209	4.70	5.30
A1	0.087	0.102	2.21	2.59
A2	0.059	0.098	1.50	2.49
D	0.819	0.845	20.79	21.45
E	0.610	0.640	15.48	16.24
E2	0.170	0.216	4.31	5.48
e	0.430 BSC		10.92 BSC	
L	0.780	0.800	19.80	20.30
L1	-	0.177	-	4.49
Ø P	0.140	0.144	3.55	3.65
Q	0.212	0.244	5.38	6.19
S	0.242 BSC		6.14 BSC	
b	0.039	0.055	0.99	1.40
b2	0.065	0.094	1.65	2.39
b4	0.102	0.135	2.59	3.43
c	0.015	0.035	0.38	0.89
D1	0.515	-	13.07	-
D2	0.020	0.053	0.51	1.35
E1	0.530	-	13.45	-
Ø P1	-	0.29	-	7.39

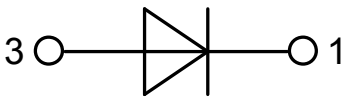

© 2013 IXYS all rights reserved