POS05200A-2555 series

5V / 2A Wall mounted type AC/DC adaptor

■ Features:

- *Universal AC input / Full range*
- *ErP step II / CEC level VI compliance*
- *No load power consumption P < 0.075W*
- *Protections: Overload / Short circuit / Over Voltage*

CONSTANT VOLTAGE

ELECTRICAL SPECIFICATION

MODEL	POS 5200A-2555
OUTPUT	
Rated Voltage	5V
Rated Current	2A
Current Range	0 ÷ 2A
Rated Power	10W
Line Regulation	± 1%
Load Regulation	± 5%
Tolerance [3]	± 8%
Ripple & Noise (max.) [2]	$150mV_{P-P}$
Setup, Rise Time [4]	5000ms, 30ms / 230VAC at full load
Hold up Time (typ.)	4ms / 230VAC at full load
INPUT	
Voltage Range	90 ÷ 264VAC
Frequency Range	47 ÷ 63Hz
Efiiciency (typ.)	79,11%
AC Current (typ.)	0.25A / 230VAC
No load Power Consumption (max.)	0.075W
PROTECTIONS	
Overload	Range: 105-200%
	Auto-recovery.
Short Circuit	Type: hiccup mode, auto-recovery.
Over Voltage	Type: auto-recovery.

sales@prom-elec.com / ООО ПРОМЭЛЕКТРОНИКА

POS05200A-2555 series

5V / 2A Wall mounted type AC/DC adaptor

WORKING ENVIRONMENT

Working Temperature	0°C ÷ 40°C
Working Humidity	10 ÷ 90% RH non-condensing
Storage Temperature and Humidity	-20°C ÷ 85°C, 5 ÷ 90% RH non-condensing

SAFETY and EMC REGULATIONS

Safety Standards	Compliance to EN 60950-1
Withstand Voltage	IN/OUT: 3.6kVAC
Isolation Resistance	IN/OUT: 50MΩ/500VDC/25°C/70%
EMC Emission	Compliance to EN55032
EMC Immunity	Compliance to EN61000-4-2, -3, -4, -5
Harmonic Current	Compliance to EN61000-3-3; EN61000-3-2

OTHERS

DC wire and plug	Wire: 22AWG*2C, length = 1500mm	Plug: 2.5/5.5mm
Net Weight / Dimensions	131.8g / 76.2 x 27.6 x 61,6mm (L x W x H)	

MECHANICAL SPECIFICATION

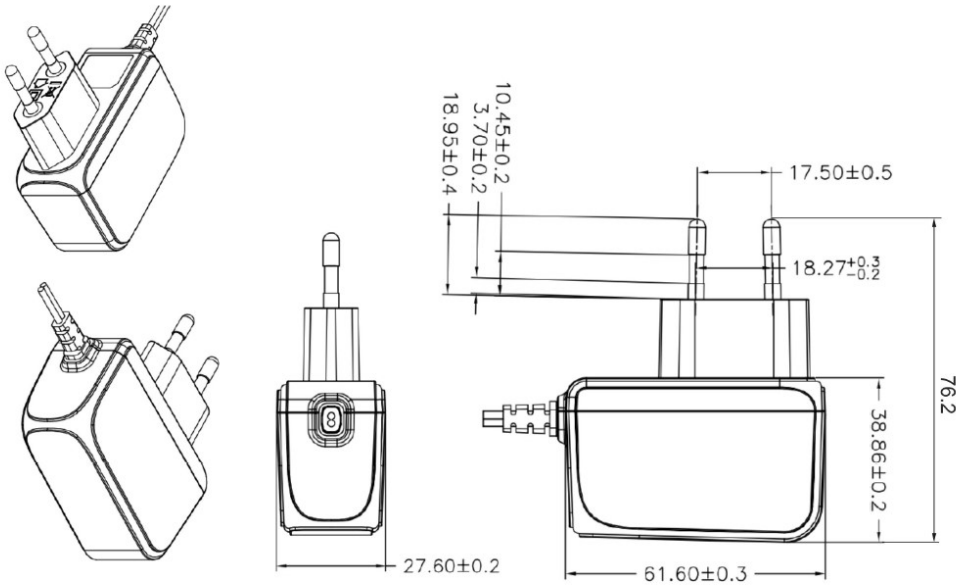

POS05200A-2555 series

5V / 2A Wall mounted type AC/DC adaptor

MECHANICAL SPECIFICATION: DC wire and plug

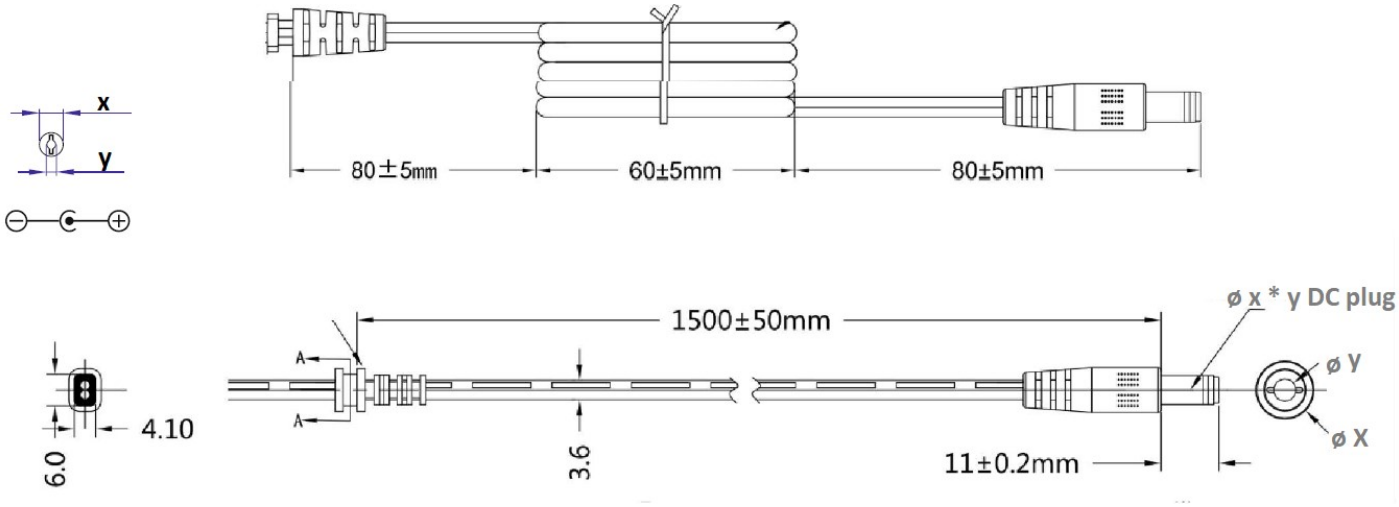

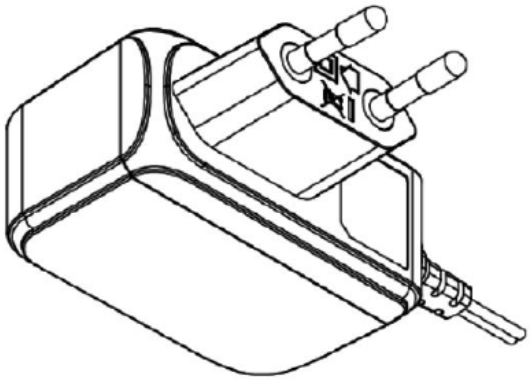

MODEL	DC PLUG	X [mm}	Y [mm]	Polarity
POS05200A-25	5.5x2.5 mm	5.5	2.5	Center positive