Huizhou Wisva Optoelectronics Co.,Ltd
惠州市慧昊光电有限公司

Add:	5F, Bld 6, Zhonghai Science Park, Dayawan West District, Huizhou China 516083		
地址:	惠州市大亚湾西区中海科技(惠州工业园)6号厂房5楼		
Tel/Tel:	0752-5288019	Web:	www.wisvaled.com/www.wisvaled.net

Product Specification

产品规格书

Item No.:
产品型号: HH-SWWW560F010W24-COB

Series: COB Series
产品系列: COB系列

Confirmation/制作	Approval/审核	Audit/确认	Date/日期	Version/版本
Eng. Harry D	何俊远	林延安	Oct 15.	1.1

sales@prom-elec.com / ООО ПРОМЭЛЕКТРОНИКА

Features(特征)

Chip on board design, up to 560 chips on single meter, only 3.57mm between each chips, more uniform and even lighting.
COB设计方案，达到560颗芯片1米，芯片间距只有3.57mm，光更加均匀一致.

Support 0/1-10V, PWM, DALI dimming ways.
支持0/1-10V, PWM, DALI等调光方式

2oz double layer flexible FPC, balancing voltage drop, heat dissipation and flexibility.
2oz双面铜箔柔性FPC，兼顾产品压降、散热及柔性.

Picture(图片)

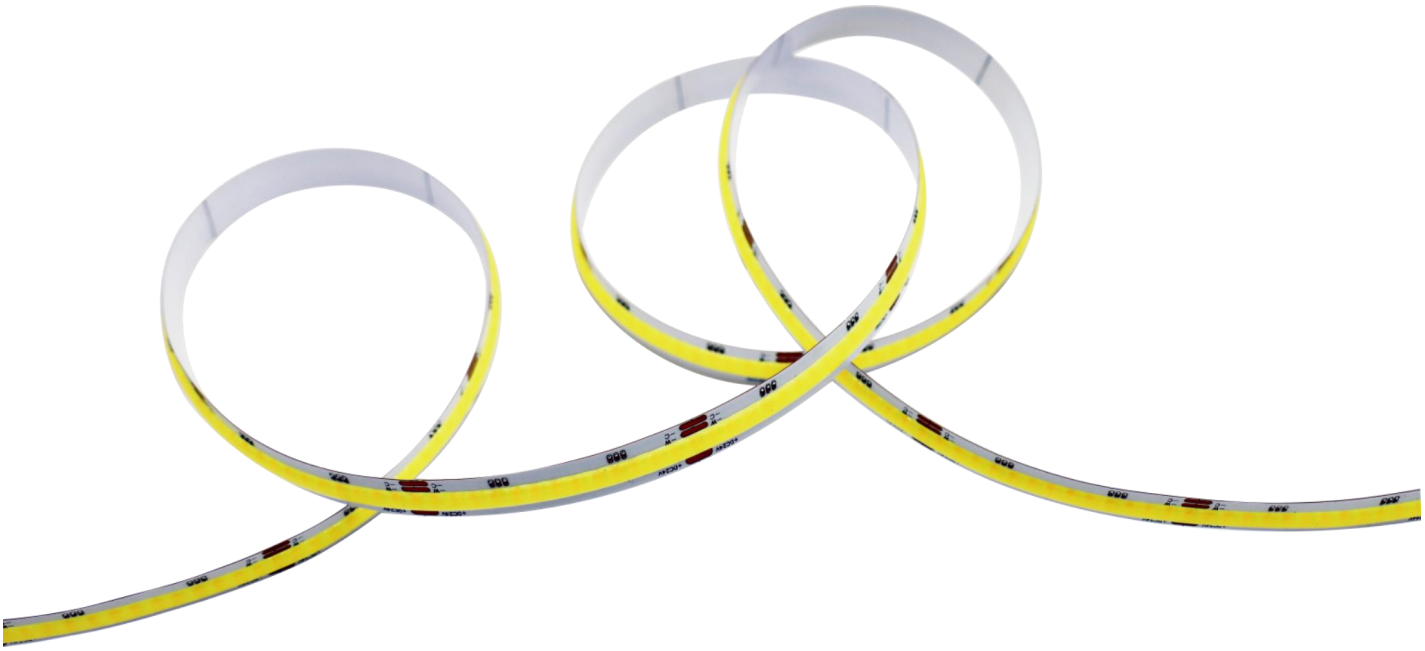

Dimensions(尺寸)

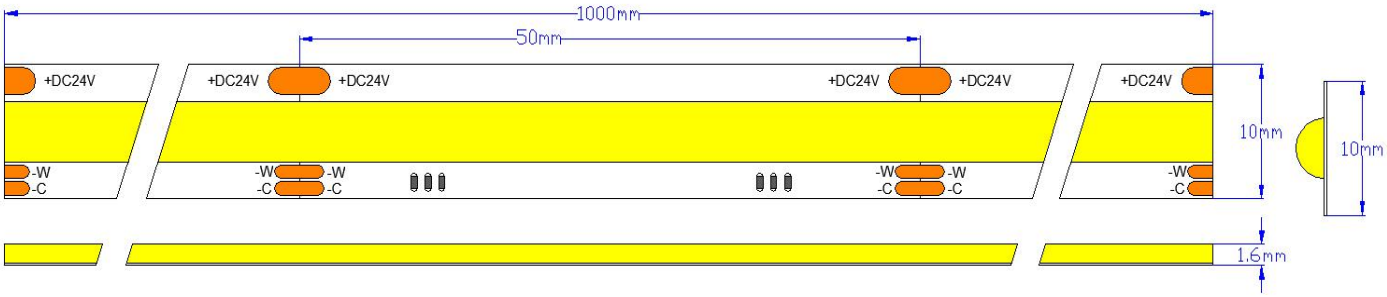

Specifications(参数)

Item NO. 产品型号	HH-SWWW560F010W24-COB
Input Voltage 输入电压	24V
PCB 板子	10mm, white
Ra 显色指数	Ra 80+

CCT 色温	3000K	6500K
LED Chip/Meter LED芯片/数量	280	280
Power 功率	8W/m	8W/m
Brightness 亮度	640Lm/M	840Lm/M
Efficiency 光效	80Lm/W	105Lm/W
Package Length 包装长度	5 meters	
Size 尺寸	Width: 10mm; Height: 1.8mm	
Cutting Length 裁剪长度	50mm	
Lifespan 工作时长	50,000 H	
Working Temperature 工作温度	-20°C - 40°C	
Storage Temperature 储存温度	-20°C - 45°C	
Warranty 质保	3 years	

* The above measurements of watts, brightness and efficiency allowance tolerance ±10%.
* 以上功率和光效允许误差范围是±10%.

* The above measurements are based on IP20.
以上测量均基于IP20.

Temperature Curve(温升曲线)

1) Single channel 8W temperature curve/单通道8W温升曲线

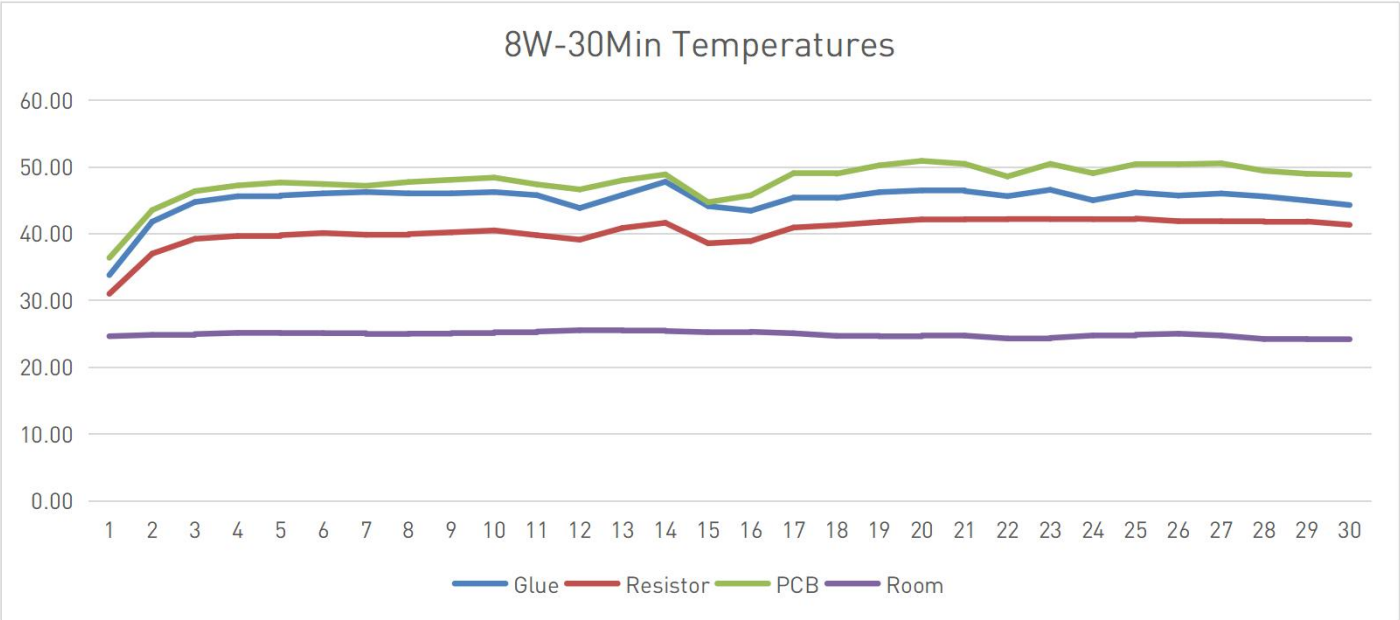

2) Dual white in full output 16W temperatures/双通道全输出16W温升曲线

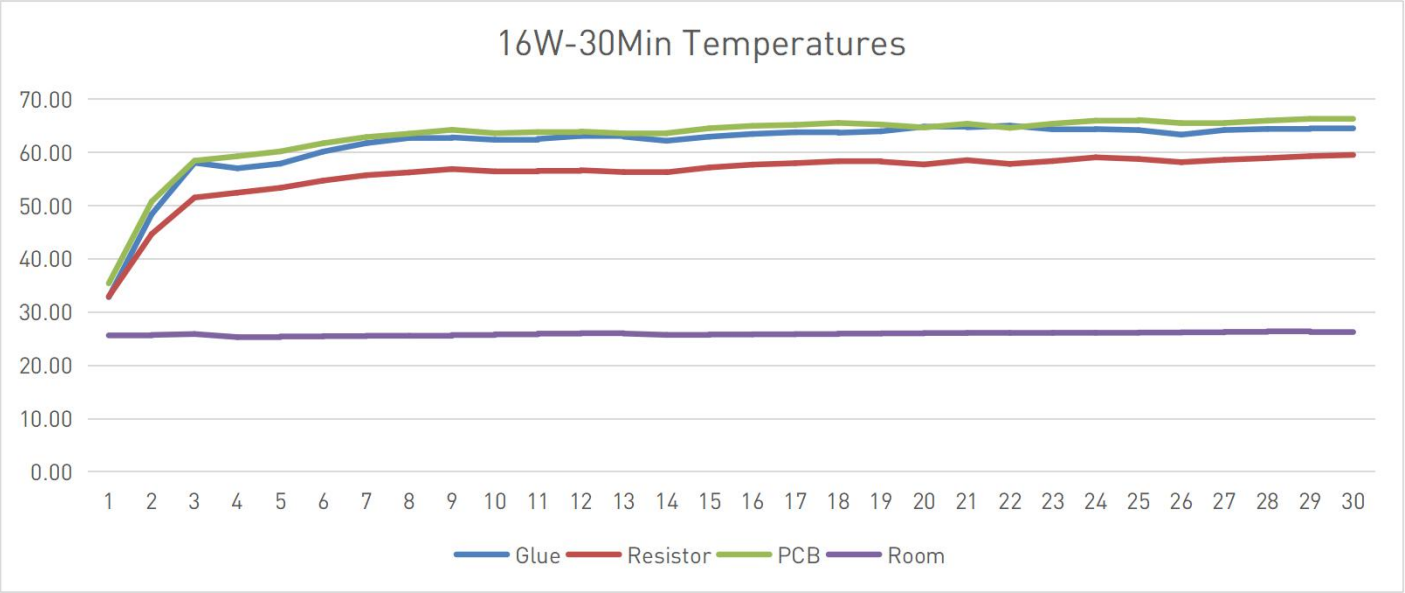

* The above curve based on 30 minutes testing data. The Temp. changes after powering within 30 minutes.
* 以上的曲线基于30分钟的测试数据，显示通电之后30分钟的温度变化.

* The x-axis indicates the minutes from 1st minute to 30th minute.
* X轴表示时间从第1分钟到第30分钟.

* The y-axis indicates the changes of temperatures in Glue, Resistor, PCB and Room.
* Y轴表示胶水，电阻，PCB和环境温度变化.

* Normally, this product work with CCT controllers, the controller will make this product running in 8W/m.
* 通常情况下，该产品配合可调色温控制器使用，控制器会使得灯带的运行功率为 8W/米.

Brightness Consistency(亮度一致性)

Length/长度: the length of strip tested./测试的灯带长度
Voltage/电压: the voltage on each meter./每一米的电压
Lumen/流明: the brightness on each meter./每一米的亮度
Difference/亮度差: the brightness loss compared to the 1st meter./与第一米相比，亮度衰减了多少.

The following chart is based on 5m running./以下数据基于5米长度

Length/长度	1st m	2nd m	3rd m	4th m	5th m
Voltage/电压	23.26	22.71	22.33	22.13	22.07
Lumen/流明	1436.72	1282.60	1176.11	1120.07	1103.26
Difference/亮度差	0.00%	-10.73%	-18.14%	-22.04%	-23.21%

The following chart is based on 4m running./以下数据基于4米长度

Length/长度	1st m	2nd m	3rd m	4th m
Voltage/电压	23.38	22.96	22.71	22.69
Lumen/流明	1470.34	1352.65	1282.60	1276.99
Difference/亮度差	0.00%	-8.00%	-12.77%	-13.15%

* The above measurements are based on powering on one side.
* 以上测试均基于单端供电

* From above charts, when 5m connecting, it's 23% brightness drop on 5th meter compared to 1st meter.
When 4m connecting, it's 13% brightness drop on 4th meter compared to 1st meter.
* 从以上表格得知，5米连接时，第5米的亮度相比第1米降低23%；4米连接时，第4米的亮度相比第1米降低13%

Waterproof Ways(防水方式)

Waterproof Ways	IP Rating	Details
防水方式	防水等级	细节说明
	IP65	Injected with Heat Shrink Tube or Silicone Tube 热缩套管或者硅胶套管防水

Installation Ways(安装方式)

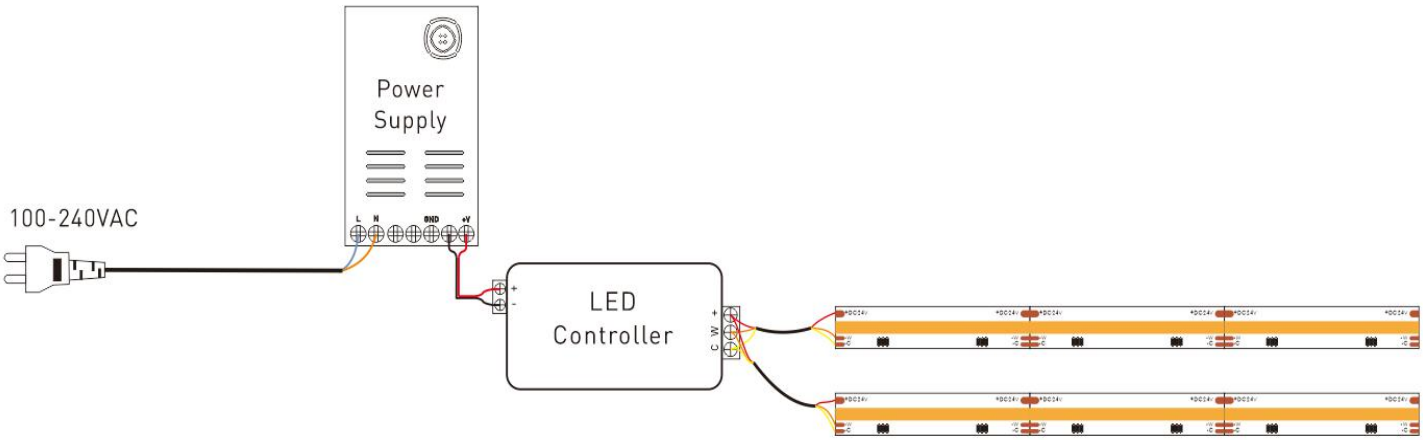

* Powering on one side, the max running length is 5 meters, for over 5 meters please connect in parallel.
单端供电最大连接长度为5米，超过5米时，请并联.

* Make sure of the total watts of COB Strip lights is less than 80% of the power supply's max output.
确保灯带的总的功率小于电源输出功率的 80%.

* Match the polarities according to the mark ('+' and '-') in the PCB while connecting.
连接时，请对准PCB板子上标注的极性.

Applications(应用)

* Residential lighting, decorative lighting.
住宅照明，装饰照明.

Package(包装)

①) 5 meters per roll.
3m一卷.

②) Each roll packed with anti-static bags, and label on it.
每一卷放入静电袋中，静电袋表面贴标签.

③) 25 rolls into a inner box(30cm x 24cm x 26cm).
25卷放入一个内箱中(30cm x 24cm x 26cm).
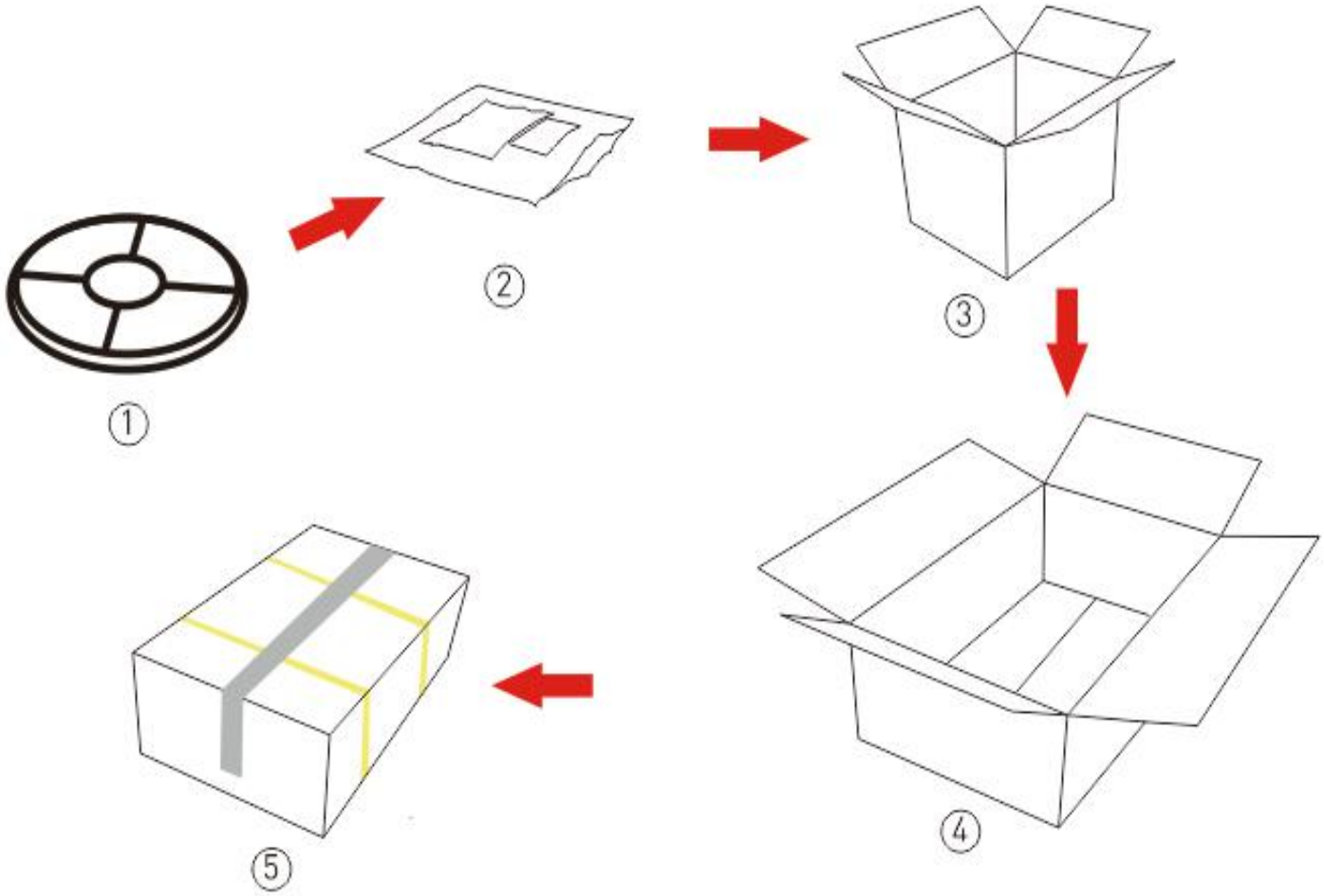
④-⑤) 2 inner boxes into a large carton (50cm*30cm*29cm).
2个小箱放入一个大箱(50cm*30cm*29cm).