PME261 Series Metallized Impregnated Paper, 10.2 – 25.4 mm Lead Spacing, 400 – 1,000 VDC

Electronic Components KEMET CHARGED.

Overview

The PME261 Series is constructed of multilayer metallized paper, encapsulated and impregnated in self-extinguishing material meeting the requirements of UL 94 V–0.

Applications

For general use in DC and low frequency pulse applications.

Benefits

- Voltage range: 400 – 1,000 VDC; 220 – 500 VAC
- Capacitance range: 0.001 – 1 µF
- Lead spacing: 10.2 – 25.4 mm
- Capacitance tolerance: ±10%, ±20%, ±5% on request
- Climatic category: 40/70/56, IEC 60068–1
- Tape and reel packaging in accordance with IEC 60286–2
- RoHS Compliant and lead-free terminations
- Operating temperature range of -40˚C to +70˚C in AC applications
- Operating temperature range of -40˚C to +100˚C in DC applications
- Excellent self-healing properties. Ensures long life even when subjected to frequent over-voltages.
- Good resistance to ionization due to impregnated dielectric

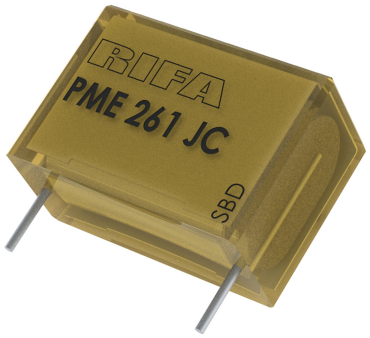

Click image above for interactive 3D content

Open PDF in Adobe Reader for full functionality

Legacy Part Number System

PME261	K	A	5100	K	R30
Series	Rated Voltage (VAC)	Lead Spacing (mm)	Capacitance Code (pF)	Capacitance Tolerance	Packaging
Metallized Paper	K = 220 E = 300 J = 500	A = 10.2 B = 15.2 C = 20.3 E = 25.4	The last three digits represent significant figures. First digit specifies the total number of digits in the capacitiance value.	J = ±5% K = ±10% M = ±20%	See Ordering Options Table

New KEMET Part Number System

P	561	H	E	103	K	220	A
Capacitor Class	Series	Lead Spacing (mm)	Size Code	Capacitance Code (pF)	Capacitance Tolerance	Rated Voltage (VAC)	Packaging
P = Paper	Metallized Paper General Purpose	H = 10.2 Q = 15.2 C = 20.3 E = 25.4	See Dimension Table	First two digits indicate the two most significant digits of the capacitance value in picofarads. The third digit is the number of following zeroes.	J = ±5% K = ±10% M = ±20%	220 = 220 300 = 300 500 = 500	See Ordering Options Table

© KEMET Electronics Corporation • P.O. Box 5928 • Greenville, SC 29606 (864) 963-6300 • www.kemet.com

sales@prom-elec.com / ООО ПРОМЭЛЕКТРОНИКА

Benefits cont'd

- IEC Publication 166 Type 1
- High dV/dt capability
- Approved according to SE–MIL–QPL
- The capacitors meet the most stringent IEC humidity class, 56 days
- The impregnated paper ensures excellent stability giving outstanding reliability properties, especially in applications having continuous operation

Ordering Options Table

Lead Spacing Nominal (mm)	Type of Leads and Packaging	Lead Length (mm)	KEMET Lead and Packaging Code	Legacy Lead and Packaging Code
10.2	**Standard Lead and Packaging Options**			
	Bulk (Bag) – Short Leads	6 +0/-1	C	R06
	Bulk (Bag) – Max Length Leads	17 +0/-1	A	R17
	Tape & Reel (Standard Reel)	H_0= 18.5 +/-0.5	L	R19T0
	Other Lead and Packaging Options			
	Tape & Reel (Large Reel)	H_0= 18.5 +/-0.5	P	R19T1
Native 10.2 formed to 7.5	Ammo Pack	H_0= 16.5 +/-0.5	LAF3	R30XA
15.2	**Standard Lead and Packaging Options**			
	Bulk (Bag) – Short Leads	6 +0/-1	C	R06
	Bulk (Bag) – Max Length Leads	30 +5/-0	A	R30
	Tape & Reel (Standard Reel)	H_0= 18.5 +/-0.5	L	R19T0
	Other Lead and Packaging Options			
	Tape & Reel (Large Reel)	H_0= 18.5 +/-0.5	P	R19T1
20.3	**Standard Lead and Packaging Options**			
	Bulk (Tray) – Short Leads	6 +0/-1	C	R06
	Bulk (Bag) – Max Length Leads	30 +5/-0	A	R30
	Tape & Reel (Standard Reel)	H_0= 18.5 +/-0.5	L	R19T0
	Other Lead and Packaging Options			
	Tape & Reel (Large Reel)	H_0= 18.5 +/-0.5	P	R19T1
25.4	**Standard Lead and Packaging Options**			
	Bulk (Tray) – Short Leads	6 +0/-1	C	R06
	Bulk (Bag) – Max Length Leads	30 +5/-0	A	R30

Dimensions – Millimeters

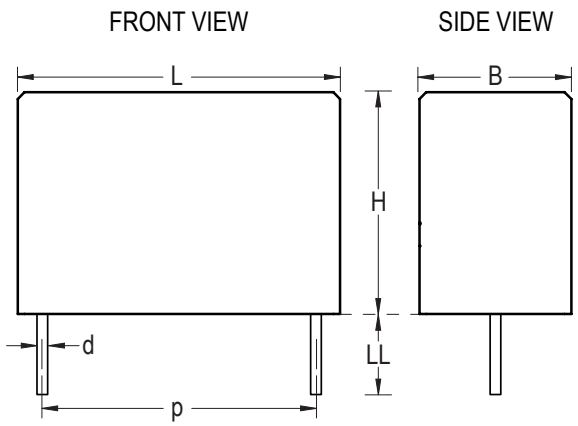

Size Code	p		B		H		L		d	
	Nominal	Tolerance	Nominal	Tolerance	Nominal	Tolerance	Nominal	Tolerance	Nominal	Tolerance
HE	10.2	+/-0.4	3.9	Maximum	7.5	Maximum	13.5	Maximum	0.6	+/-0.05
HL	10.2	+/-0.4	5.1	Maximum	10.5	Maximum	13.5	Maximum	0.6	+/-0.05
QE	15.2	+/-0.4	5.2	Maximum	10.5	Maximum	18.5	Maximum	0.8	+/-0.05
QM	15.2	+/-0.4	7.3	Maximum	13.0	Maximum	18.5	Maximum	0.8	+/-0.05
QP	15.2	+/-0.4	7.8	Maximum	13.5	Maximum	18.5	Maximum	0.8	+/-0.05
CE	20.3	+/-0.4	7.6	Maximum	14.0	Maximum	24.0	Maximum	0.8	+/-0.05
CG	20.3	+/-0.4	8.4	Maximum	14.0	Maximum	24.0	Maximum	0.8	+/-0.05
CJ	20.3	+/-0.4	9.0	Maximum	15.0	Maximum	24.0	Maximum	0.8	+/-0.05
CP	20.3	+/-0.4	11.3	Maximum	16.5	Maximum	24.0	Maximum	0.8	+/-0.05
EH	25.4	+/-0.4	10.6	Maximum	17.3	Maximum	30.5	Maximum	1	+/-0.05
EL	25.4	+/-0.4	15.3	Maximum	22.0	Maximum	30.5	Maximum	1	+/-0.05

Note: See Ordering Options Table for lead length (LL) options.

Performance Characteristics

Rated Voltage V_R (VDC)	400	630	1000
Rated Voltage V_R (VAC)	220	300	500
Capacitance Range (µF)	0.0082 – 1.0	0.001 – 0.15	0.001 – 0.1
Capacitance Tolerance	±10%, ±20%, ±5% on request		
Temperature Range	-40 to +70°C		
	-40 to +100°C		
Climatic Category	40/070/56		
Dissipation Factor tanδ	Maximum Values at +23°C		
	1 kHz		1.3%
Insulation Resistance	Measured at +20°C, According to IEC 60384–2		
	Minimum Values Between Terminals		
	C ≤ 0.33 µF		≥ 12,000 MΩ
	C > 0.33 µF		≥ 4,000 MΩ • µF
	PME261 K measured at 100 VDC after 60 seconds, +23°C		
	PME261 E and J measured at 500 VDC after 60 seconds, +23°C		

Environmental Test Data

Test	IEC Publication	Procedure
Vibration	IEC 60068–2–6 Test Fc	3 directions at 2 hours each 10 – 55 Hz at 0.75 mm or 98 m/s^2
Bump	IEC 60068–2–29 Test Eb	4,000 bumps at 390 m/s^2
Solderability	IEC 60068–2–20 Test Ta	Solder globule method Wetting time for d ≤ 0.8 < 1 second for d > 0.8 < 1.5 seconds
Passive Flammability	IEC 60695–2–2	
Damp Heat Steady State	IEC 60068-2-3 Test Ca	+40°C and 90 – 95% RH, 56 days

Environmental Compliance

All KEMET Metallized Impregnated Paper capacitors are RoHS Compliant.

Table 1 – Ratings & Part Number Reference

Capacitance Value (µF)	Max Dimensions in mm			Lead Spacing (p)	dV/dt (V/µs)	New Kemet Part Number	Legacy Part Number
	B	H	L				
0.0082	3.9	7.5	13.5	10.2	2000	P561HE822(1)220(2)	PME261KA4820(1)(2)
0.010	3.9	7.5	13.5	10.2	2000	P561HE103(1)220(2)	PME261KA5100(1)(2)
0.015	5.1	10.5	13.5	10.2	2000	P561HL153(1)220(2)	PME261KA5150(1)(2)
0.022	5.1	10.5	13.5	10.2	2000	P561HL223(1)220(2)	PME261KA5220(1)(2)
0.033	5.2	10.5	18.5	15.2	1600	P561QE333(1)220(2)	PME261KB5330(1)(2)
0.047	5.2	10.5	18.5	15.2	1300	P561QE473(1)220(2)	PME261KB5470(1)(2)
0.068	7.3	13.0	18.5	15.2	1100	P561QM683(1)220(2)	PME261KB5680(1)(2)
0.1	7.3	13.0	18.5	15.2	850	P561QM104(1)220(2)	PME261KB6100(1)(2)
0.15	7.6	14.0	24.0	20.3	700	P561CE154(1)220(2)	PME261KC6150(1)(2)
0.22	8.4	14.0	24.0	20.3	560	P561CG224(1)220(2)	PME261KC6220(1)(2)
0.33	11.3	16.5	24.0	20.3	430	P561CP334(1)220(2)	PME261KC6330(1)(2)
0.47	10.6	17.3	30.5	25.4	370	P561EH474(1)220(2)	PME261KE6470(1)(2)
0.68	15.3	22.0	30.5	25.4	300	P561EL684(1)220(2)	PME261KE6680(1)(2)
1	15.3	22.0	30.5	25.4	220	P561EL105(1)220(2)	PME261KE7100(1)(2)
0.001	3.9	7.5	13.5	10.2	2000	P561HE102(1)300(2)	PME261EA4100(1)(2)
0.0015	3.9	7.5	13.5	10.2	2000	P561HE152(1)300(2)	PME261EA4150(1)(2)
0.0022	3.9	7.5	13.5	10.2	2000	P561HE222(1)300(2)	PME261EA4220(1)(2)
0.0033	3.9	7.5	13.5	10.2	2000	P561HE332(1)300(2)	PME261EA4330(1)(2)
0.0047	3.9	7.5	13.5	10.2	2000	P561HE472(1)300(2)	PME261EA4470(1)(2)
0.0068	3.9	7.5	13.5	10.2	2000	P561HE682(1)300(2)	PME261EA4680(1)(2)
0.01	5.1	10.5	13.5	10.2	2000	P561HL103(1)300(2)	PME261EA5100(1)(2)
0.015	5.1	10.5	13.5	10.2	2000	P561HL153(1)300(2)	PME261EA5150(1)(2)
0.022	5.2	10.5	18.5	15.2	2000	P561QE223(1)300(2)	PME261EB5220(1)(2)
0.033	5.2	10.5	18.5	15.2	2000	P561QE333(1)300(2)	PME261EB5330(1)(2)
0.047	7.3	13.0	18.5	15.2	1600	P561QM473(1)300(2)	PME261EB5470(1)(2)
0.068	7.3	13.0	18.5	15.2	1200	P561QM683(1)300(2)	PME261EB5680(1)(2)
0.1	7.6	14.0	24.0	20.3	900	P561CE104(1)300(2)	PME261EC6100(1)(2)
0.15	9.0	15.0	24.0	20.3	650	P561CJ154(1)300(2)	PME261EC6150(1)(2)
0.001	3.9	7.5	13.5	10.2	2000	P561HE102(1)500(2)	PME261JA4100(1)(2)
0.0015	3.9	7.5	13.5	10.2	2000	P561HE152(1)500(2)	PME261JA4150(1)(2)
0.0022	3.9	7.5	13.5	10.2	2000	P561HE222(1)500(2)	PME261JA4220(1)(2)
0.0033	3.9	7.5	13.5	10.2	2000	P561HE332(1)500(2)	PME261JA4330(1)(2)
0.0047	5.1	10.5	13.5	10.2	2000	P561HL472(1)500(2)	PME261JA4470(1)(2)
0.0068	5.1	10.5	13.5	10.2	2000	P561HL682(1)500(2)	PME261JA4680(1)(2)
0.01	5.2	10.5	18.5	15.2	2000	P561QE103(1)500(2)	PME261JB5100(1)(2)
0.015	5.2	10.5	18.5	15.2	2000	P561QE153(1)500(2)	PME261JB5150(1)(2)
0.022	7.3	13.0	18.5	15.2	2000	P561QM223(1)500(2)	PME261JB5220(1)(2)
0.033	7.8	13.5	18.5	15.2	2000	P561QP333(1)500(2)	PME261JB5330(1)(2)
0.047	7.6	14.0	24.0	20.3	2000	P561CE473(1)500(2)	PME261JC5470(1)(2)
0.068	9.0	15.0	24.0	20.3	1400	P561CJ683(1)500(2)	PME261JC5680(1)(2)
0.1	11.3	16.5	24.0	20.3	950	P561CP104(1)500(2)	PME261JC6100(1)(2)
Capacitance Value (µF)	**B (mm)**	**H (mm)**	**L (mm)**	**Lead Spacing (p)**	**dV/dt (V/µs)**	**New KEMET Part Number**	**Legacy Part Number**

(1) K = ±10%, M = ±20%, J = ±5% on request.

(2) Insert lead and packaging code. See Ordering Options Table for available options.

Soldering Process

The implementation of the RoHS directive has resulted in the selection of SnAgCu (SAC) alloys or SnCu alloys as primary solder. This has increased the liquidus temperature from that of 183ºC for SnPb eutectic alloy to 217 – 221ºC for the new alloys. As a result, the heat stress to the components, even in wave soldering, has increased considerably due to higher pre-heat and wave temperatures. Polypropylene capacitors are especially sensitive to heat (the melting point of polypropylene is 160 – 170ºC). Wave soldering can be destructive, especially for mechanically small polypropylene capacitors (with lead spacing of 5 mm to 15 mm), and great care has to be taken during soldering. The recommended solder profiles from KEMET should be used. Please consult KEMET with any questions. In general, the wave soldering curve from IEC Publication 61760-1 Edition 2 serves as a solid guideline for successful soldering. Please see Figure 1.

Reflow soldering is not recommended for through-hole film capacitors. Exposing capacitors to a soldering profile in excess of the above the recommended limits may result to degradation or permanent damage to the capacitors.

Do not place the polypropylene capacitor through an adhesive curing oven to cure resin for surface mount components. Insert through-hole parts after the curing of surface mount parts. Consult KEMET to discuss the actual temperature profile in the oven, if through-hole components must pass through the adhesive curing process. A maximum two soldering cycles is recommended. Please allow time for the capacitor surface temperature to return to a normal temperature before the second soldering cycle.

Manual Soldering Recommendations

Following is the recommendation for manual soldering with a soldering iron.

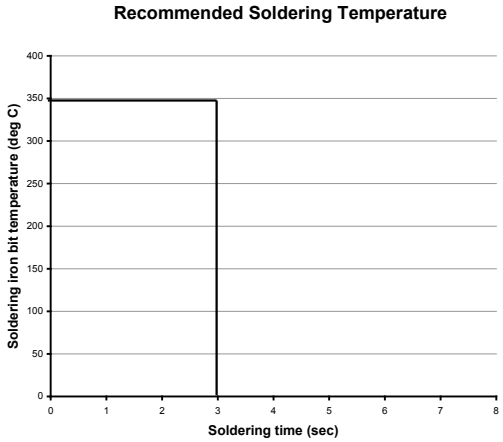

The soldering iron tip temperature should be set at 350°C (+10°C maximum) with the soldering duration not to exceed more than 3 seconds.

Wave Soldering Recommendations

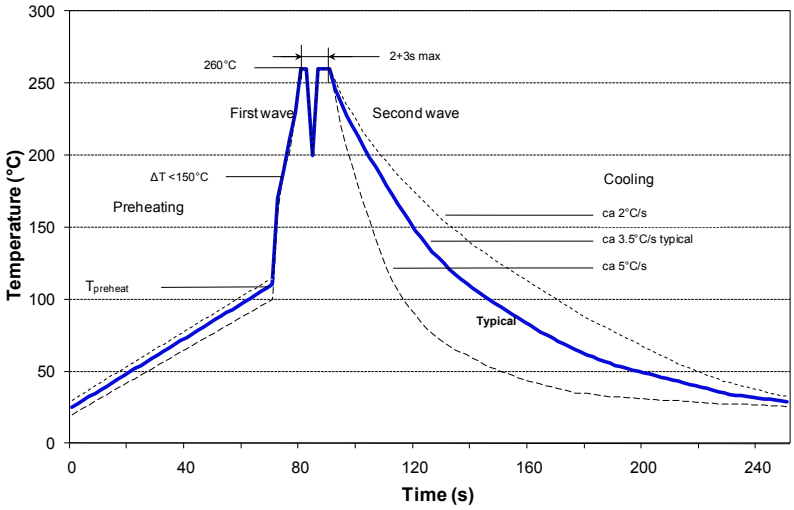

Soldering Process cont'd

Wave Soldering Recommendations cont'd

1. The table indicates the maximum set-up temperature of the soldering process
Figure 1

Dielectric Film Material	Maximum Preheat Temperature			Maximum Peak Soldering Temperature	
	Capacitor Pitch ≤ 10 mm	Capacitor Pitch = 15 mm	Capacitor Pitch > 15 mm	Capacitor Pitch ≤ 15 mm	Capacitor Pitch > 15 mm
Polyester	130°C	130°C	130°C	270°C	270°C
Polypropylene	100°C	110°C	130°C	260°C	270°C
Paper	130°C	130°C	140°C	270°C	270°C
Polyphenylene Sulphide	150°C	150°C	160°C	270°C	270°C

2. The maximum temperature measured inside the capacitor:
   Set the temperature so that inside the element the maximum temperature is below the limit:

Dielectric Film Material	Maximum temperature measured inside the element
Polyester	160°C
Polypropylene	110°C
Paper	160°C
Polyphenylene sulphide	160°C

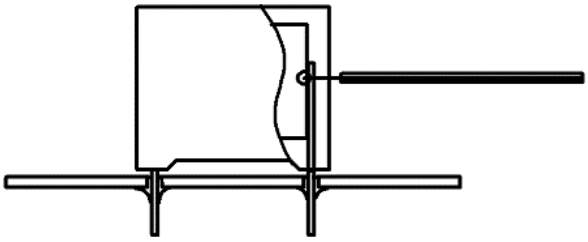

Temperature monitored inside the capacitor.

Selective Soldering Recommendations

Selective dip soldering is a variation of reflow soldering. In this method, the printed circuit board with through-hole components to be soldered is preheated and transported over the solder bath as in normal flow soldering without touching the solder. When the board is over the bath, it is stopped and pre-designed solder pots are lifted from the bath with molten solder only at the places of the selected components, and pressed against the lower surface of the board to solder the components.

The temperature profile for selective soldering is similar to the double wave flow soldering outlined in this document, **however, instead of two baths, there is only one bath with a time from 3 to 10 seconds.** In selective soldering, the risk of overheating is greater than in double wave flow soldering, and great care must be taken so that the parts are not overheated.

Construction

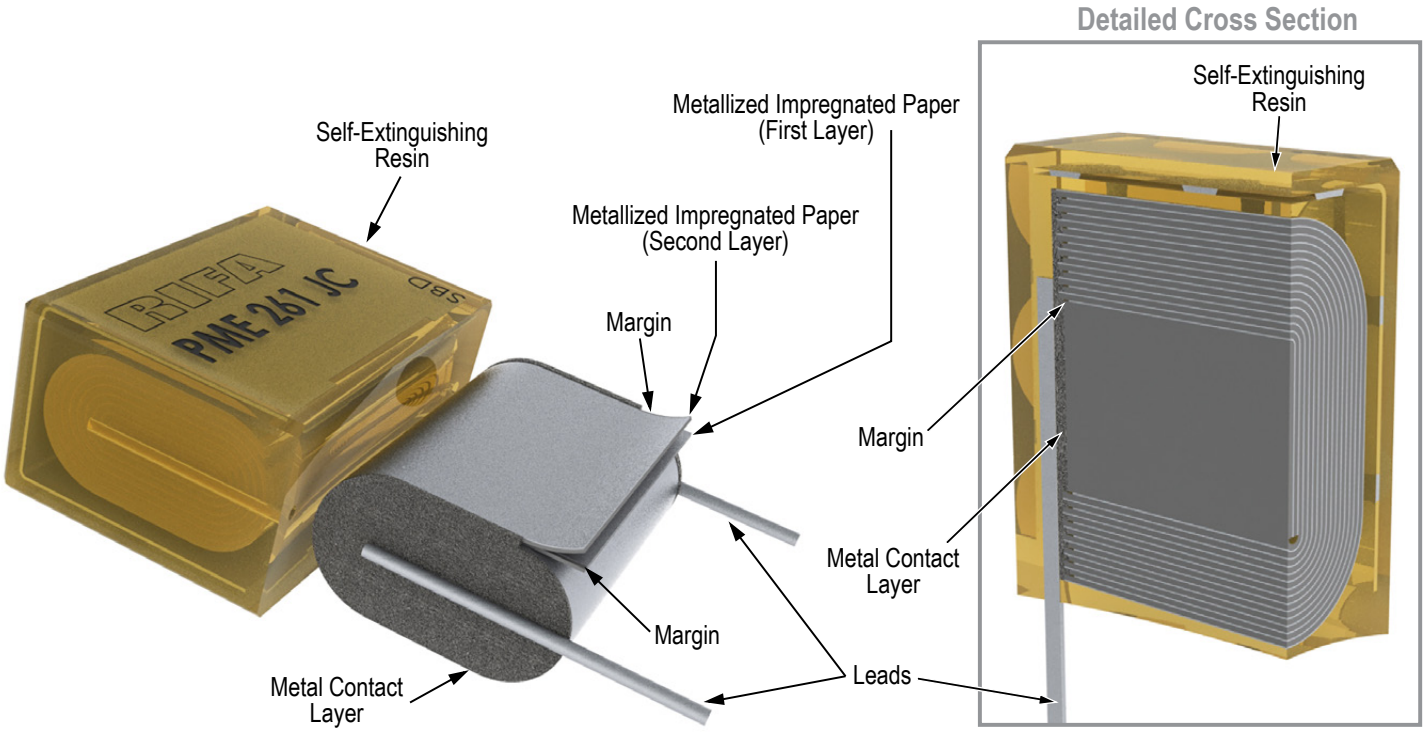

Winding Scheme

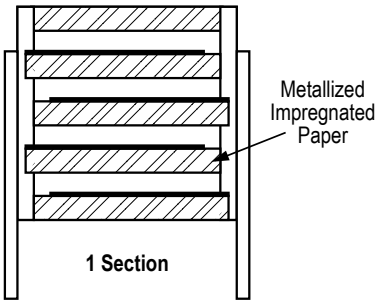

Marking

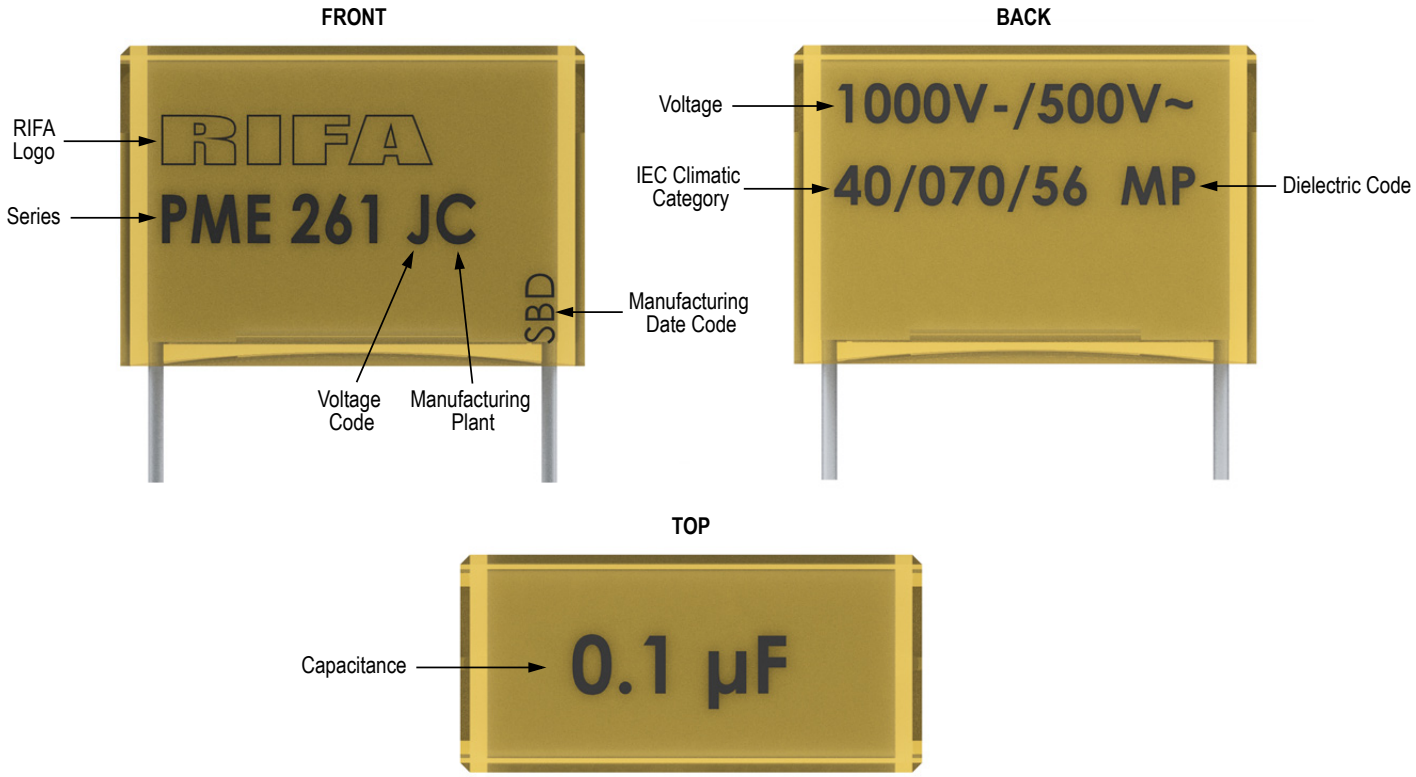
FRONT
RIFA Logo
Series
RIFA
PME 261 JC
SBD
Voltage Code
Manufacturing Plant
Manufacturing Date Code
BACK
Voltage
IEC Climatic Category
1000V-/500V~
40/070/56 MP
Dielectric Code
TOP
Capacitance
0.1 µF

Packaging Quantities

Lead Spacing (mm)	Thickness (mm)	Height (mm)	Length (mm)	Bulk Short Leads	Bulk Long Leads	Standard Reel ø 360 mm	Large Reel ø 500 mm	Ammo Formed
10.2	3.9	7.5	13.5	2000	1000	700	1400	800
	4.1	8.2	13.5	2000	1000	600		780
	5.1	10.5	13.5	1600	800	600	1200	630
15.2	5.5	12.5	18	1000	500	600		
	6.5	12.5	18	600	400	400		
	7.5	14.5	18	600	400	400		
	8.5	16	18	400	250	400		
	5.2	10.5	18.5	1000	500	600		
	5.5	11	18.5	1000	500	500		
	6	12.5	18.5	600	400	400		
	7.3	13	18.5	600	400	400	800	
	7.8	13.5	18.5	600	400	400		
	8.5	14.3	18.5	500	300	350		
20.3	7.6	14	24	1500	250	250	500	
	8.4	14	24	1200	200	250	500	
	9	15	24	1500	200	250		
	11.3	16.5	24	1000	150	180	400	
25.4	10.6	16.1	30.5	1000	150			
	10.5	17.3	30.5	1000	100			
	12.1	19	30.5	800	100			
	15.3	22	30.5	600	75			

Lead Taping & Packaging (IEC 60286–2)

Lead Spacing 10.2 – 15.2 mm

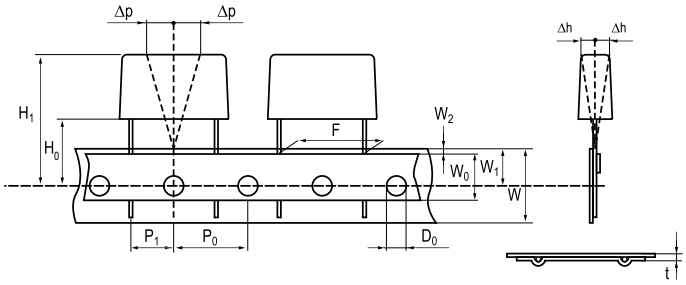

Lead Spacing 20.3 – 22.5 mm

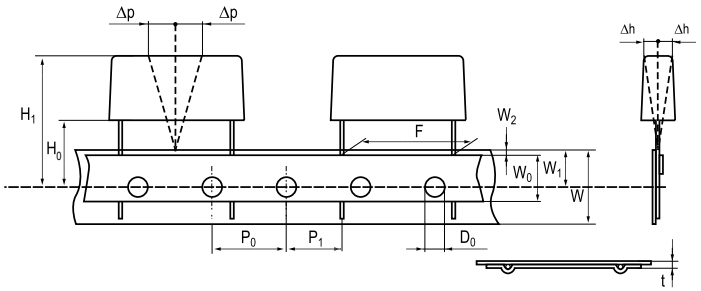

Formed Leads from 10.2 to 7.5 mm

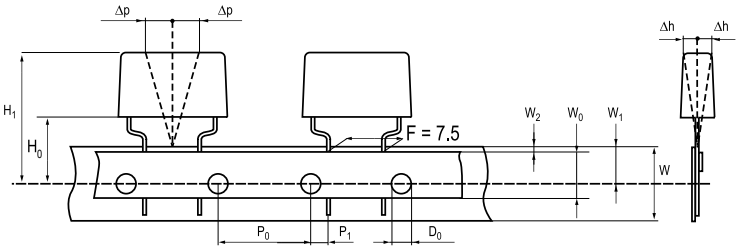

Taping Specification

Dimensions in mm								Standard IEC 60286–2
Lead spacing	+6/-0.1	F	Formed 7.5	10.2	15.2	20.3	22.5	F
Carrier tape width	+/-0.5	W	18	18	18	18	18	$18^{+1/-0.5}$
Hold-down tape width	+/-0.3	W_0	9	12	12	12	12	
Position of sprocket hole	+/-0.5	W_1	9	9	9	9	9	$9^{+0.75/-0.5}$
Distance between tapes	Maximum	W_2	3	3	3	3	3	3
Sprocket hole diameter	+/-0.2	D_0	4	4	4	4	4	4
Feed hole lead spacing	+/-0.3	P_0 (1)	12.7(4)	12.7	12.7	12.7	12.7	12.7
Distance lead – feed hole	+/-0.7	P_1	3.75	7.6	5.1	8.9	5.3	P^1
Deviation tape – plane	Maximum	Δp	1.3	1.3	1.3	1.3	1.3	1.3
Lateral deviation	Maximum	Δh	2	2	2	2	2	2
Total thickness	+/-0.2	t	0.7	0.7	0.7	0.7	0.9^{MAX}	0.9^{MAX}
Sprocket hole/cap body	Nominal	H_0 (2)	$18^{+2/-0}$	$18^{+2/-0}$	$18^{+2/-0}$	$18^{+2/-0}$	$18.5^{+/-0.5}$	$18^{+2/-0}$
Sprocket hole/top of cap body	Maximum	H_1 (3)	35	35	35	35	58	58^{MAX}

(1) Maximum cumulative feed hole error, 1 mm per 20 parts.
(2) 16.5 mm available on request.
(3) Depending on case size.
(4) 15 mm available on request.

Lead Taping & Packaging (IEC 60286–2) cont'd

Ammo Specifications

Series	Dimensions (mm)		
	H	W	T
R4x, R4x+R, R7x, RSB	360	340	59
F5A, F5B, F5D			
F6xx, F8xx			
PHExxx, PMExxx, PMRxxx	330	330	50

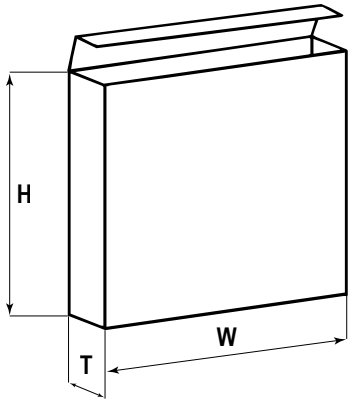

Reel Specifications

Series	Dimensions (mm)		
	D	H	W
R4x, R4x+R, R7x, RSB	355 500	30 25	55 (Max)
F5A, F5B, F5D			
F6xx, F8xx			
PHExxx, PMExxx, PMRxxx	360 500	30	46 (Max)

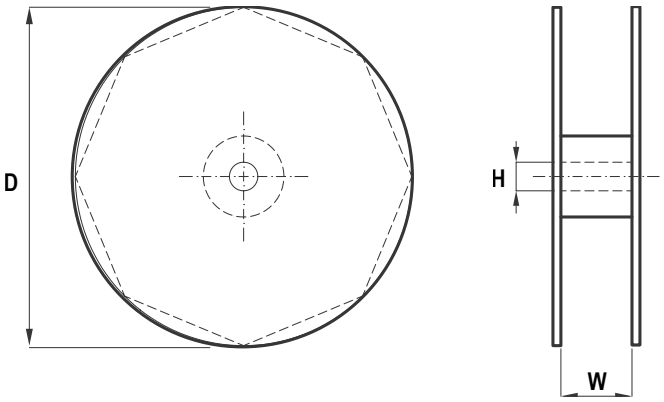

Manufacturing Date Code (IEC–60062)

Y = Year, Z = Month			
Year	Code	Month	Code
2000	M	January	1
2001	N	February	2
2002	P	March	3
2003	R	April	4
2004	S	May	5
2005	T	June	6
2006	U	July	7
2007	V	August	8
2008	W	September	9
2009	X	October	O
2010	A	November	N
2011	B	December	D
2012	C		
2013	D		
2014	E		
2015	F		
2016	H		
2017	J		
2018	K		
2019	L		
2020	M		

KEMET Corporation World Headquarters

2835 KEMET Way
Simpsonville, SC 29681

Mailing Address:
P.O. Box 5928
Greenville, SC 29606

www.kemet.com
Tel: 864-963-6300
Fax: 864-963-6521

Corporate Offices
Fort Lauderdale, FL
Tel: 954-766-2800

North America

Southeast
Lake Mary, FL
Tel: 407-855-8886

Northeast
Wilmington, MA
Tel: 978-658-1663

Central
Novi, MI
Tel: 248-994-1030

West
Milpitas, CA
Tel: 408-433-9950

Mexico
Guadalajara, Jalisco
Tel: 52-33-3123-2141

Europe

Southern Europe
Sasso Marconi, Italy
Tel: 39-051-939111

Skopje, Macedonia
Tel: 389-2-55-14-623

Central Europe
Landsberg, Germany
Tel: 49-8191-3350800

Kamen, Germany
Tel: 49-2307-438110

Northern Europe
Wyboston, United Kingdom
Tel: 44-1480-273082

Espoo, Finland
Tel: 358-9-5406-5000

Asia

Northeast Asia
Hong Kong
Tel: 852-2305-1168

Shenzhen, China
Tel: 86-755-2518-1306

Beijing, China
Tel: 86-10-5877-1075

Shanghai, China
Tel: 86-21-6447-0707

Seoul, South Korea
Tel: 82-2-6294-0550

Taipei, Taiwan
Tel: 886-2-27528585

Southeast Asia
Singapore
Tel: 65-6701-8033

Penang, Malaysia
Tel: 60-4-6430200

Bangalore, India
Tel: 91-806-53-76817

Note: KEMET reserves the right to modify minor details of internal and external construction at any time in the interest of product improvement. KEMET does not assume any responsibility for infringement that might result from the use of KEMET Capacitors in potential circuit designs. KEMET is a registered trademark of KEMET Electronics Corporation.

Disclaimer

All product specifications, statements, information and data (collectively, the "Information") in this datasheet are subject to change. The customer is responsible for checking and verifying the extent to which the Information contained in this publication is applicable to an order at the time the order is placed.

All Information given herein is believed to be accurate and reliable, but it is presented without guarantee, warranty, or responsibility of any kind, expressed or implied.

Statements of suitability for certain applications are based on KEMET Electronics Corporation's ("KEMET") knowledge of typical operating conditions for such applications, but are not intended to constitute – and KEMET specifically disclaims – any warranty concerning suitability for a specific customer application or use. The Information is intended for use only by customers who have the requisite experience and capability to determine the correct products for their application. Any technical advice inferred from this Information or otherwise provided by KEMET with reference to the use of KEMET's products is given gratis, and KEMET assumes no obligation or liability for the advice given or results obtained.

Although KEMET designs and manufactures its products to the most stringent quality and safety standards, given the current state of the art, isolated component failures may still occur. Accordingly, customer applications which require a high degree of reliability or safety should employ suitable designs or other safeguards (such as installation of protective circuitry or redundancies) in order to ensure that the failure of an electrical component does not result in a risk of personal injury or property damage.

Although all product–related warnings, cautions and notes must be observed, the customer should not assume that all safety measures are indicted or that other measures may not be required.