Kingbright

# KPH-1608ID
## 1.6 x 0.8 mm SMD Chip LED Lamp

## DESCRIPTION

- The High Efficiency Red source color devices are made with Gallium Arsenide Phosphide on Gallium Phosphide Orange Light Emitting Diode

## FEATURES

- 1.6 mm x 0.8 mm SMD LED, 0.65 mm thickness
- Low power consumption
- Wide viewing angle
- Ideal for backlight and indicator
- Package: 2000 pcs / reel
- Moisture sensitivity level: 3
- RoHS compliant

## APPLICATIONS

- Backlight
- Status indicator
- Home and smart appliances
- Wearable and portable devices
- Healthcare applications

## PACKAGE DIMENSIONS

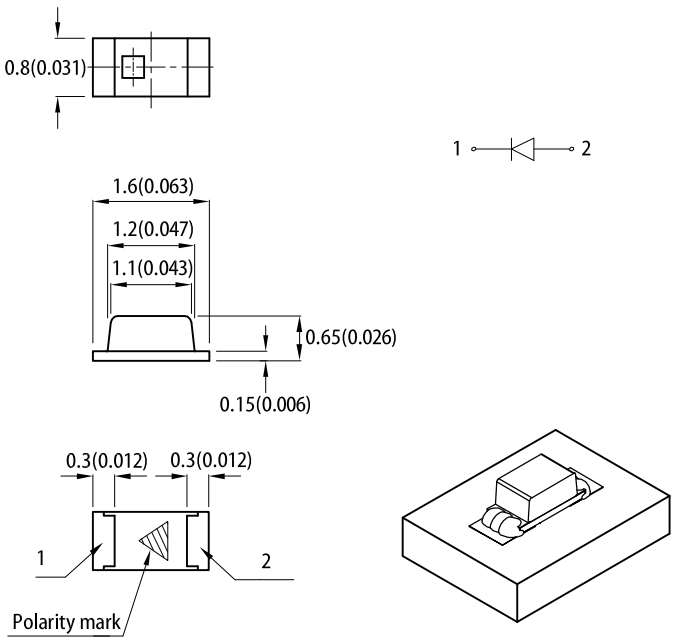


**RECOMMENDED SOLDERING PATTERN**
(units : mm; tolerance : ± 0.1)

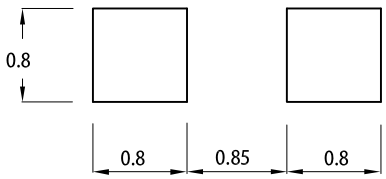


*Notes:*
*1. All dimensions are in millimeters (inches).*
*2. Tolerance is ±0.1(0.004") unless otherwise noted.*
*3. The specifications, characteristics and technical data described in the datasheet are subject to change without prior notice.*
*4. The device has a single mounting surface. The device must be mounted according to the specifications.*

## SELECTION GUIDE

| Part Number | Emitting Color (Material) | Lens Type | Iv (mcd) @ 20mA [2] | | Viewing Angle [1] |
|---|---|---|---|---|---|
| | | | Min. | Typ. | 2θ1/2 |
| KPH-1608ID | High Efficiency Red (GaAsP/GaP) | Red Diffused | 5 | 12 | 160° |
| | | | *5 | *7 | |

*Notes:*
*1. θ1/2 is the angle from optical centerline where the luminous intensity is 1/2 of the optical peak value.*
*2. Luminous intensity / luminous flux: +/-15%.*
** Luminous intensity value is traceable to CIE127-2007 standards.*

© 2017 Kingbright. All Rights Reserved. 

sales@prom-elec.com / ООО ПРОМЭЛЕКТРОНИКА

## ELECTRICAL / OPTICAL CHARACTERISTICS at $T_A$=25°C

| Parameter | Symbol | Emitting Color | Value | | Unit |
|---|---|---|---|---|---|
| | | | Typ. | Max. | |
| Wavelength at Peak Emission $I_F$ = 20mA | $\lambda_{peak}$ | High Efficiency Red | 627 | - | nm |
| Dominant Wavelength $I_F$ = 20mA | $\lambda_{dom}$ [1] | High Efficiency Red | 617 | - | nm |
| Spectral Bandwidth at 50% Φ REL MAX $I_F$ = 20mA | Δλ | High Efficiency Red | 45 | - | nm |
| Capacitance | C | High Efficiency Red | 15 | - | pF |
| Forward Voltage $I_F$ = 20mA | $V_F$ [2] | High Efficiency Red | 2 | 2.5 | V |
| Reverse Current ($V_R$ = 5V) | $I_R$ | High Efficiency Red | - | 10 | uA |

*Notes:*
*1. The dominant wavelength (λd) above is the setup value of the sorting machine. (Tolerance λd : ±1nm. )*
*2. Forward voltage: ±0.1V.*
*3. Wavelength value is traceable to CIE127-2007 standards.*
*4. Excess driving current and / or operating temperature higher than recommended conditions may result in severe light degradation or premature failure.*

## ABSOLUTE MAXIMUM RATINGS at $T_A$=25°C

| Parameter | Symbol | Value | Unit |
|---|---|---|---|
| Power Dissipation | $P_D$ | 75 | mW |
| Reverse Voltage | $V_R$ | 5 | V |
| Junction Temperature | $T_j$ | 125 | °C |
| Operating Temperature | $T_{op}$ | -40 to +85 | °C |
| Storage Temperature | $T_{stg}$ | -40 to +85 | °C |
| DC Forward Current | $I_F$ | 30 | mA |
| Peak Forward Current | $I_{FM}$ [1] | 160 | mA |
| Electrostatic Discharge Threshold (HBM) | - | 8000 | V |

*Notes:*
*1. 1/10 Duty Cycle, 0.1ms Pulse Width.*
*2. Relative humidity levels maintained between 40% and 60% in production area are recommended to avoid the build-up of static electricity – Ref JEDEC/JESD625-A and JEDEC/J-STD-033.*

RoHS © 2017 Kingbright. All Rights Reserved. 

## TECHNICAL DATA

### RELATIVE INTENSITY vs. WAVELENGTH

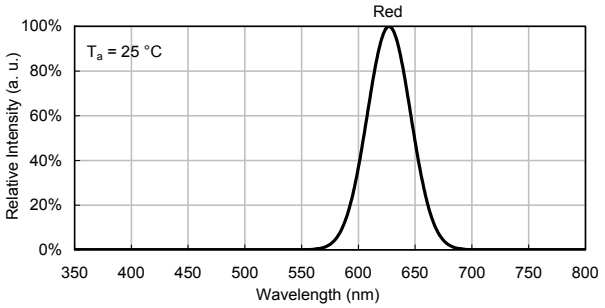


### SPATIAL DISTRIBUTION

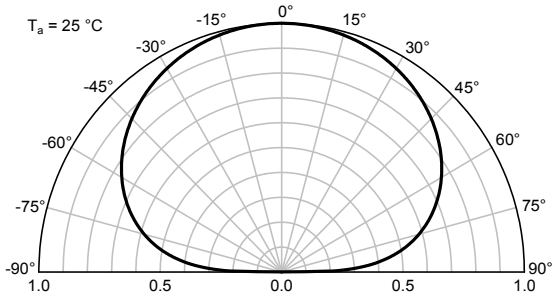


## HIGH EFFICIENCY RED

**Forward Current vs. Forward Voltage**

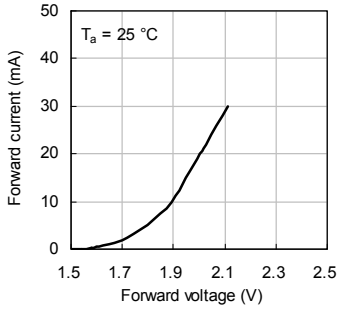


**Luminous Intensity vs. Forward Current**

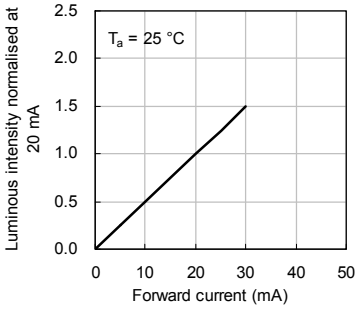


**Forward Current Derating Curve**

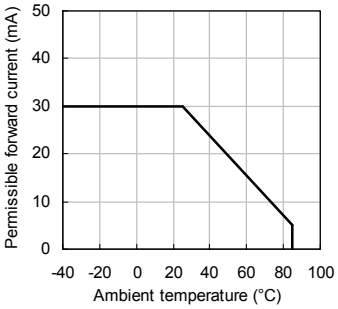


**Luminous Intensity vs. Ambient Temperature**

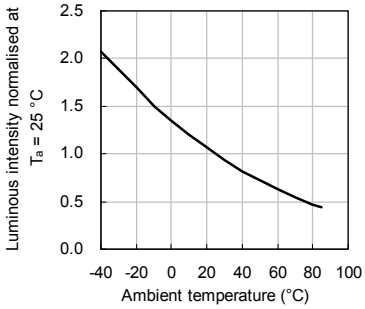


### REFLOW SOLDERING PROFILE for LEAD-FREE SMD PROCESS

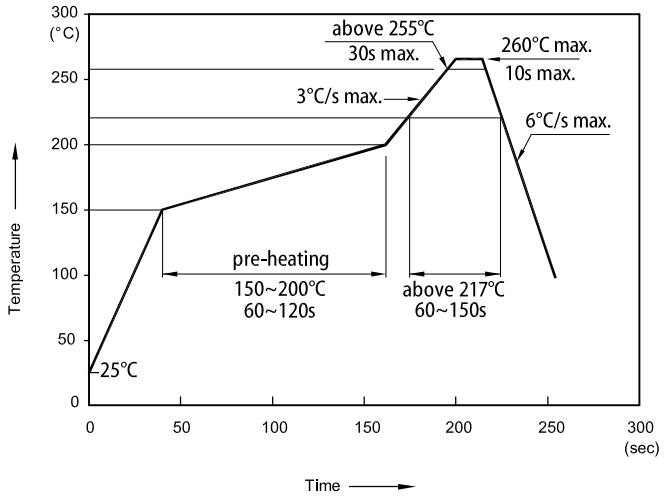


*Notes:*
*1. Don't cause stress to the LEDs while it is exposed to high temperature.*
*2. The maximum number of reflow soldering passes is 2 times.*
*3. Reflow soldering is recommended. Other soldering methods are not recommended as they might cause damage to the product.*

### TAPE SPECIFICATIONS (units : mm)

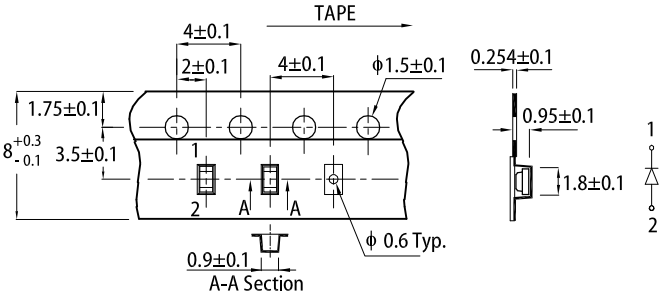


### REEL DIMENSION (units : mm)

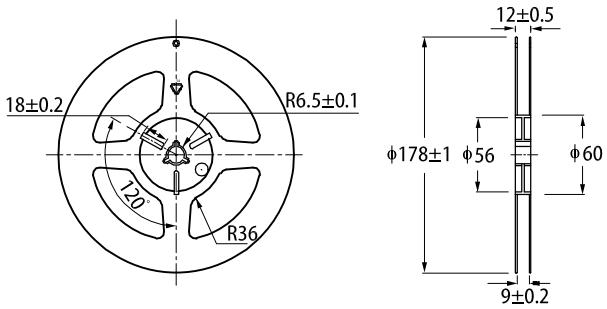


© 2017 Kingbright. All Rights Reserved. 

## PACKING & LABEL SPECIFICATIONS

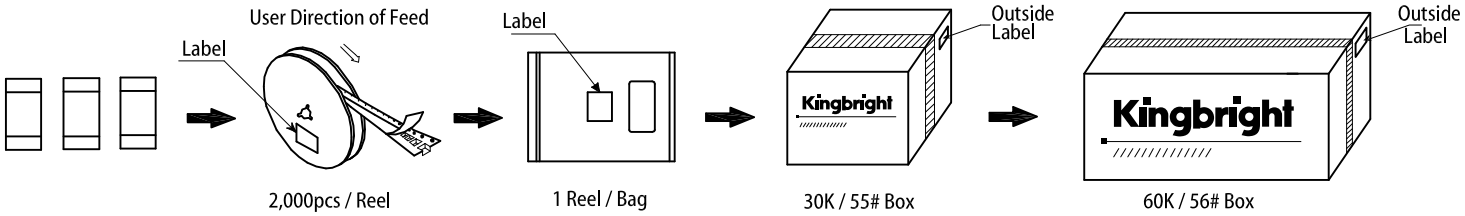


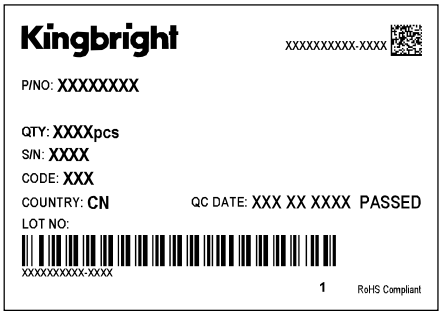


### PRECAUTIONARY NOTES

1. The information included in this document reflects representative usage scenarios and is intended for technical reference only.
2. The part number, type, and specifications mentioned in this document are subject to future change and improvement without notice. Before production usage customer should refer to the latest datasheet for the updated specifications.
3. When using the products referenced in this document, please make sure the product is being operated within the environmental and electrical limits specified in the datasheet. If customer usage exceeds the specified limits, Kingbright will not be responsible for any subsequent issues.
4. The information in this document applies to typical usage in consumer electronics applications. If customer's application has special reliability requirements or have life-threatening liabilities, such as automotive or medical usage, please consult with Kingbright representative for further assistance.
5. The contents and information of this document may not be reproduced or re-transmitted without permission by Kingbright.
6. All design applications should refer to Kingbright application notes available at http://www.kingbright.com/application_notes

RoHS © 2017 Kingbright. All Rights Reserved. 