Sefram

Make sure to visit our Website
http://www.sefram.fr

MW 9520

Cable locator

Cable and defect locator : works for all metal conductors

A single instrument for maintenance, renovation and improvement

Capabilities :

- Transmitter and receiver with panoramic backlighted LCD
- Operates on current-carrying (live) or non current-carrying mains circuits
- Adjustable level for the transmitter (3 levels)
- Adjustable sensitivity for the receiver
- Several transmitters can be used with different coding
- Powerful built-in torch with LED
- Silent mode
- Non contact voltage detector function (on the receiver)
- Voltage measurement (on the transmitter)
- Easy-to-use
- Safety : CAT III - 450V

Applications :

- Location and tracking of lines and sockets
- Location of defects on cables (open)
- Fault location in under-floor heating systems
- Detection of metal heating ducts
- Detection of water pipes
- Location of defects on cables (open)
- Location of short-circuits on cables
- Location of fuses or breaker on switching boards
- Tracking of buried circuits

A single instrument for all your diagnostics

The cable locator MW9520 is the ideal tool for the housing maintenance, renovation or improvement. Ilt detects electrical power cables, telecommunication cables, metal pipes (water, heating) and even defaults on your lines, as open or short circuits.

A simple and easy-to-use instrument

The transmitter and the receiver are set to work in an automatic mode. A large panoramic and backlighted LCD gives all information concerning the signal level & strength, signal coding and other parameters. Both receiver and transmitter are equipped with a powerful built-in LED torch to work in poor light conditions.

Supplied with a complete set of accessories

The MW9520 cable locator is supplied in a rugged carrying case which includes :

- transmitter and receiver
- adapter for main socket
- adapter for screw socket(E27)
- adapter for bayonet socket (B22)
- 1 set of safety test leads and alligator clips (red + black)
- 1 earth spike

All modules can be purchased separately in case of loss or damage.

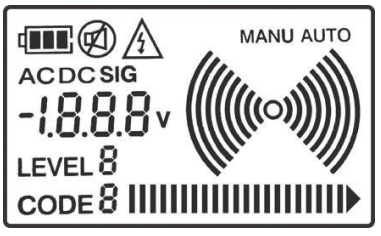

Backlighted LCD with all parameters and information

Sefram

Sefram

MW 9520

Cable locator

MW9520: a simple **easy-to-use** instrument to detect and locate all electrical power cables (live or not), telecommunication cables, metal pipes (water, heating).
A unique tool for housing maintenance, renovation and improvement.

Transmitter MW9520-E **Receiver MW9520-R**

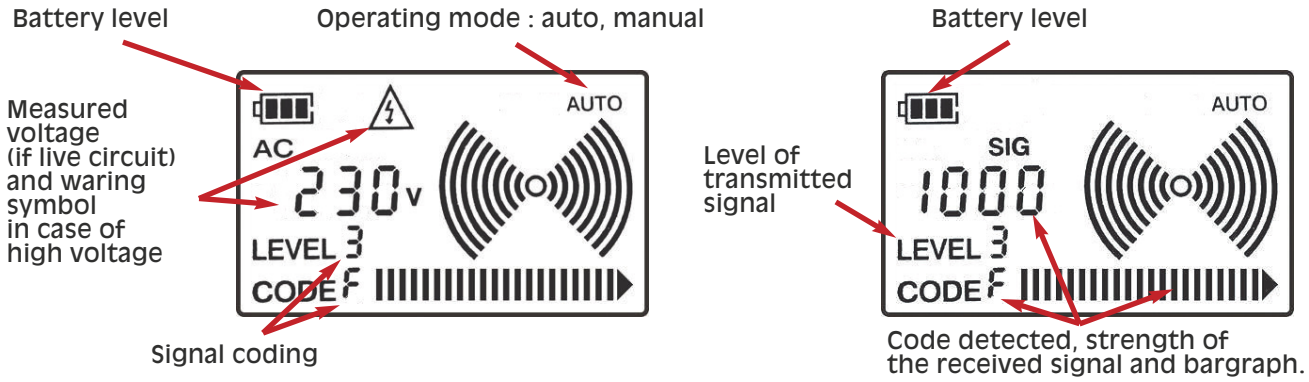

All parameters and information are displayed on a panoramic backlighted LCD (transmitter & receiver)

CE

Sefram

Applications of the MW9520 cables & defects locator

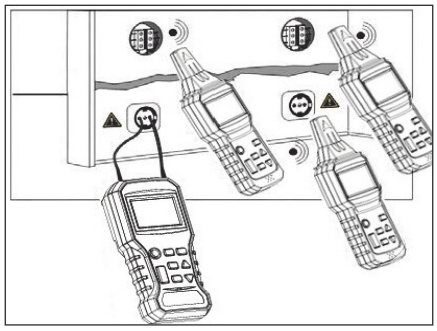

Location and tracking of lines and sockets

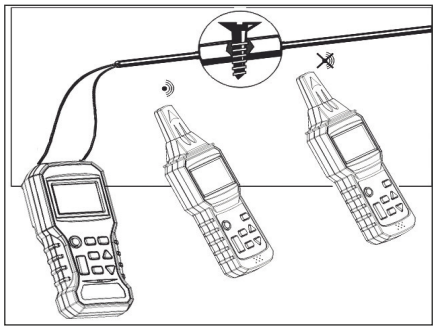

Location of a short-circuit

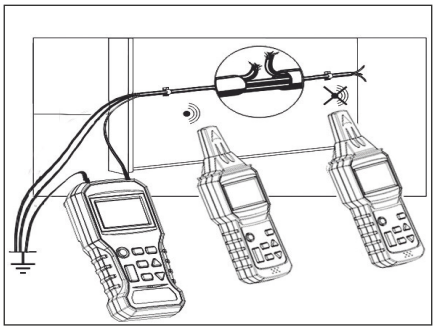

Location of an open circuit

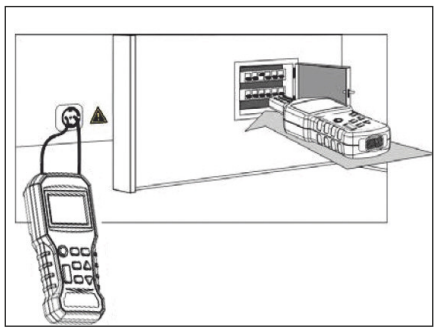

Location of a fuse on a switching board

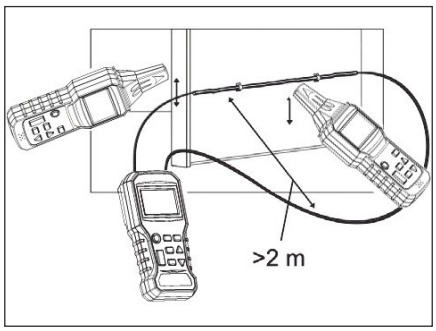

Location of a wire in a wall

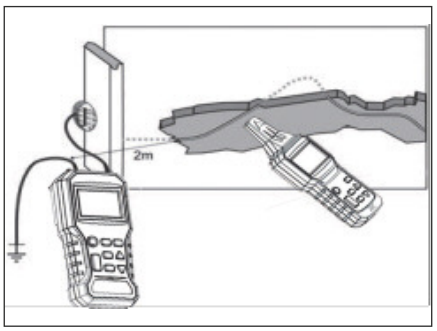

Tracking of buried cables

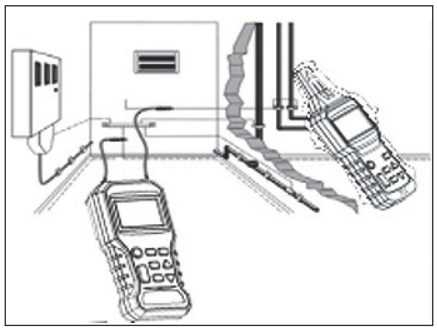

Location of water pipes (metal)

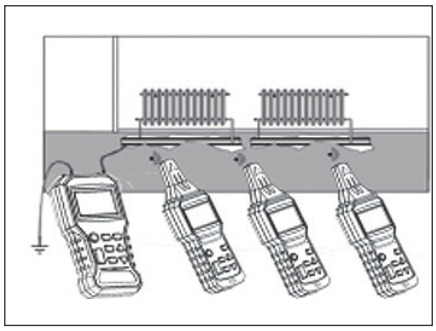

Location of heating pipes

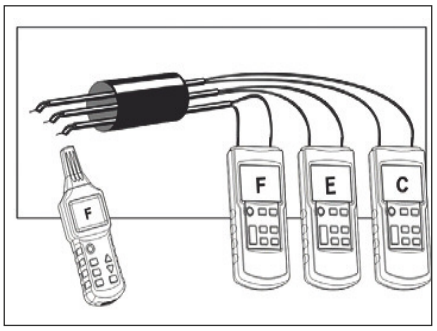

Location of pairs in a multi wires cable

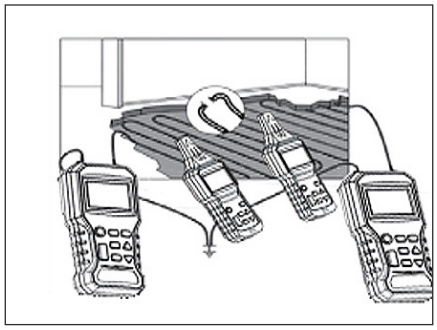

Fault detection in under-floor heating system with 1 transmitter/ 1 code or 2 transmitters/2 codes

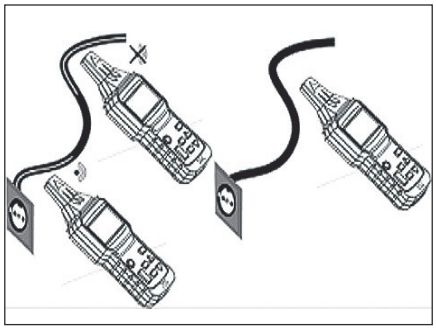

Non contact voltage detector

Sefram

MW 9520

Cable locator

Transmitter MW9520-E	
Signal frequency	125kHz
Voltage measurement range	12 to 300V AC and 12 to 300V DC
Display	backlighted LCD
Information displayed	Signal level, measured voltage, polarity (AC, DC), battery level, mode (auto, manual), signal coding
Operating modes	Automatic or manual
Signal coding	F, E, H, d, L, C, O, A
Torch	with 2 powerful LED
Signal level	Adjustable, 3 levels
Functions	Auto power-off
Protection	fuse 0,5A/690V (6,3 x 32mm)
Power-supply	6 x 1,5V batteries, AAA (LR03)
Operating temperature	0°C to 40°C
Storage temperature	-10°C to +50°C
Dimensions	247 x 78 x 45 mm
Weight	390g
Safety (IEC61010)	CAT III - 450V

Receiver - MW9520-R	
Detection depth	
- in single-pole operation	2m typical
- in two-pole operation	0,5m typical
Non contact voltage detector range	from 12V to 450V AC or DC
Display	backlighted LCD
Information displayed	Transmitted signal level, received signal level, battery level, mode (auto, manual), signal coding
Sensitivity	automatic or adjustable in manual mode
Other functions	auto power-off
Torch	with 2 powerful LED
Power-supply	6 x 1,5V batteries, AAA (LR03)
Operating temperature	0°C to 40°C
Storage temperature	-10°C to +50°C
Dimensions	188 x 90 x 47 mm
Weight	330g

Supplied with : a transmitter MW9520-E, a receiver MW9520-R, a carrying case, a main socket adapter (995201000), a screw adapter E27 (995202000), a bayonet adapter B22 (995203000), a set of red + black alligator clips (SA110), a set of red + black test leads (SA105), a earth spike (995204000), 12 x 1,5V AAA batteries, instruction manual.

Optional accessories :
9520-E: transmitter
9520-R: receiver
SA160: set of red + black stackable test leads, 1,5m length.

CE

FT MW9520 A00 - Specifications can be updated without notice

For assistance and ordering

Sefram

afaq ISO 9001 Qualité AFNOR CERTIFICATION 1997/7001

32, rue Edouard Martel - BP55- 42009 - St Etienne - cedex 2
Tél. +33 (0) 4.77.59.01.01
Fax. +33 (0) 4.77.57.23.23
Web : www.sefram.fr - e-mail : sales@sefram.fr