ILLUMINATED TACT SWITCHES

» Features

- Contact Reliability Clip type contacts are applied to ensure high reliability.
- For PC Board Terminals are all IC pitched (multiple of 2.54mm). By a particular terminal shape, the switch tightly when solder-dipped.
- Protection from Flux Entry Terminals are all completely sealed by epoxy.
- Many LED lights are available.

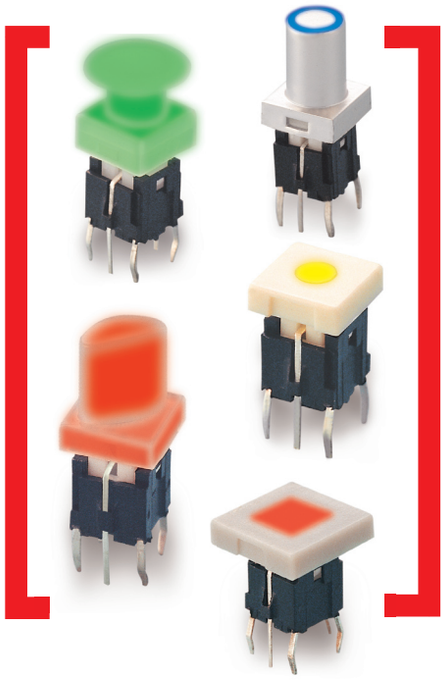

» Applications

- Operating switches in all types of electronic equipment such as audio apparatus, office equipment , communications apparatus, TV sets, VCRs, etc.

» Specifications

Rating	50mA 12VDC
Insulation Resistance	100MΩ Min (at 500 VDC)
Dielectric Strength	AC 250V (50/60 Hz for 1 minute)
Contact Resistance	100mΩ Max. (Initial)
Electrically Life	300,000 Cycles Min
Ambient Temperature	-20°C~ +70°C
Operating Force	160 ± 50gf
Travel	0.25 ± 0.1 mm

» Product selection

PB614 □ □ □ - □ □ □ □

- 1 BUTTON TYPE
- 2 FRAME
- 3 FUNCTION
- 4 LED COLOR
- 5 LED BRIGHTNESS
- 6 CAP SURFACE PROCESS
- 7 CAP SURFACE PROCESS SYMBOL

sales@prom-elec.com / ООО ПРОМЭЛЕКТРОНИКА

ILLUMINATED TACT SWITCHES

1 BUTTON TYPE

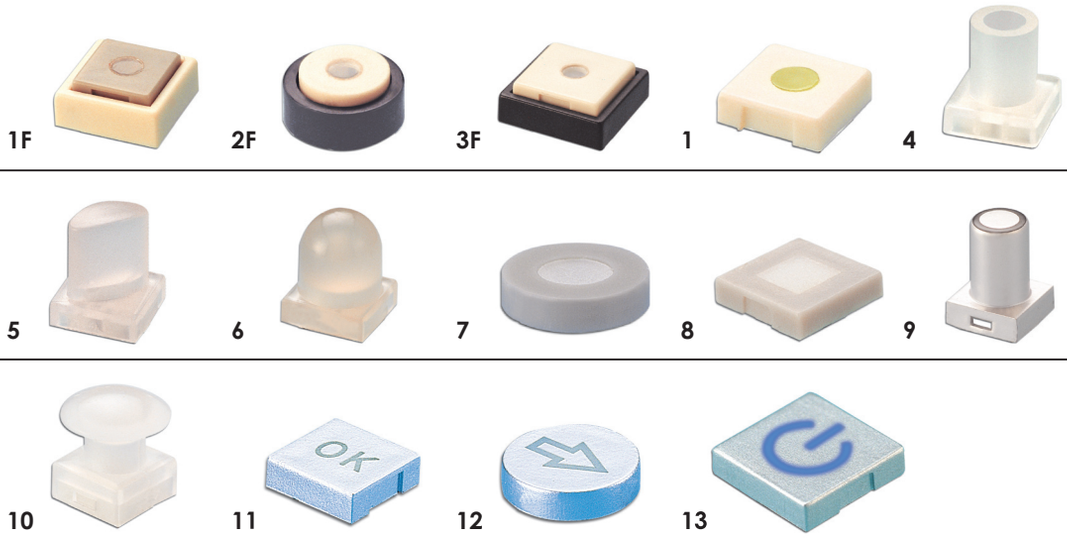

2 FRAME

_	Without
F	With frame

3 FUNCTION

Non-illuminated		Illuminated	
_	Standard type	L	Standard type
M	SMT type	ML	SMT type

4 LED COLOR

1	Red
2	Yellow
3	Green
4	Blue
5	White
6	Pure Green
12	Red / Yellow
13	Red / Green
23	Yellow/ Green

5 LED BRIGHTNESS

_	Standard
C	Customization

6 CAP SURFACE PROCESS PLATED TYPE

1	Misty Silver
2	Bright Silver
3	Gold

7 CAP SURFACE PROCESS SYMBOL

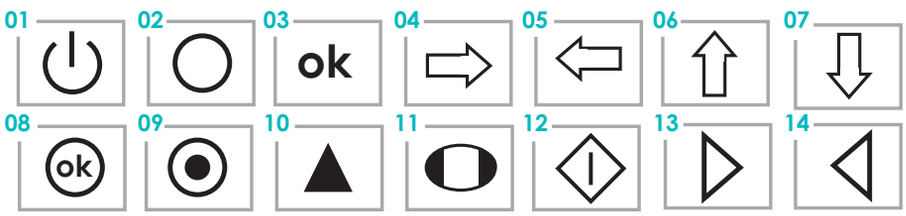

» LED Specifications

Color	VR	IF	Recommended Operating Current	VF	
				Nom	Max
Red	DC 5V	20mA	20mA	1.7V	2.4V
Green	DC 5V	20mA	20mA	1.9V	2.4V
Yellow	DC 5V	20mA	20mA	1.9V	2.4V
Blue	DC 5V	20mA	20mA	3.0V	3.6V
White	DC 5V	20mA	20mA	3.0V	3.6V

» Operating characteristics

Unit: mm

Dimensions

Circuit P.C.B Layout

PB6141FL

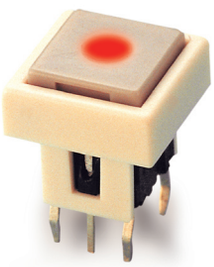

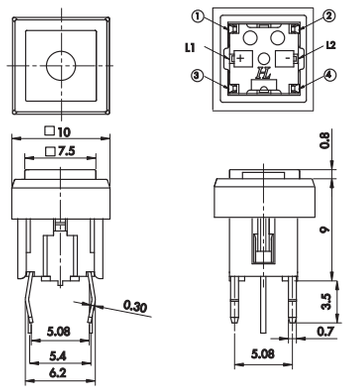

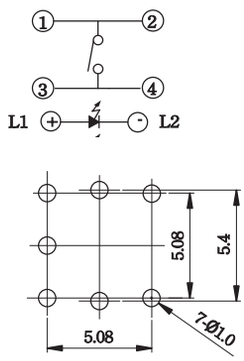

PB6142FL

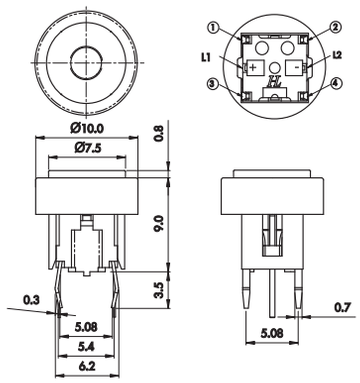

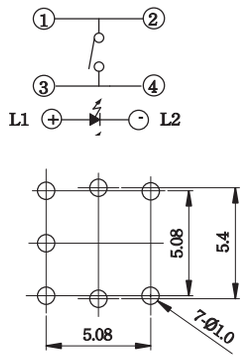

PB6143FL

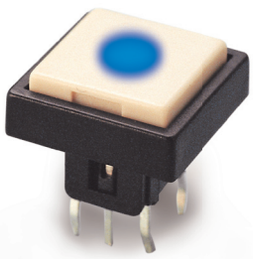

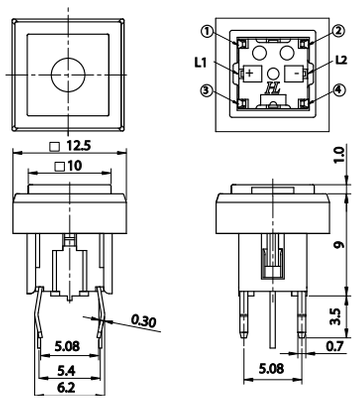

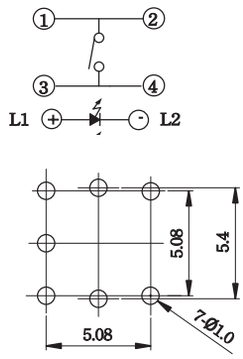

» Operating characteristics

Unit: mm

Dimensions | Circuit | P.C.B Layout

PB6141L

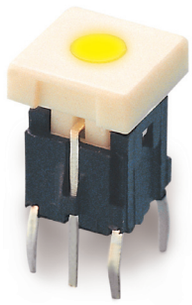

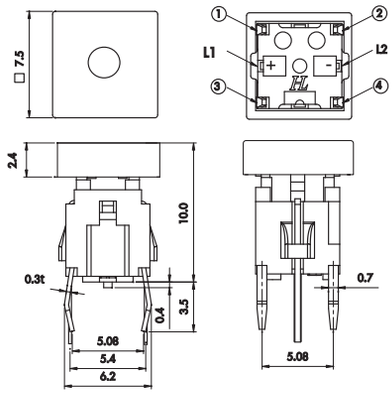

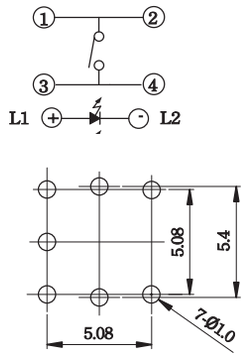

PB6144L

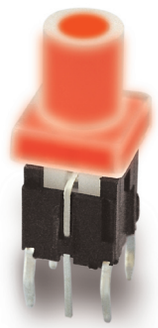

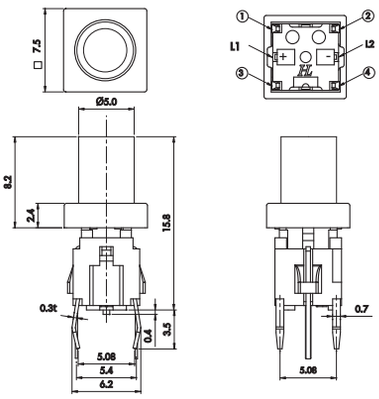

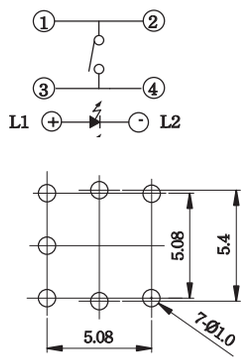

PB6145L

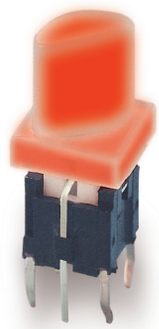

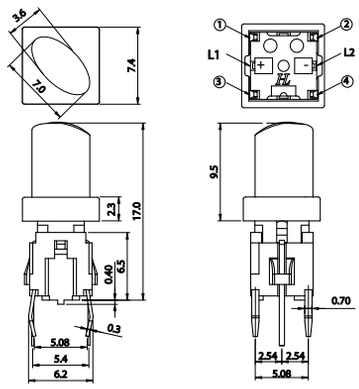

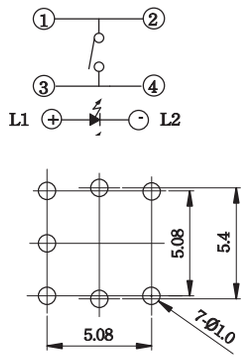

PB6146L

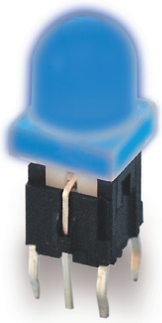

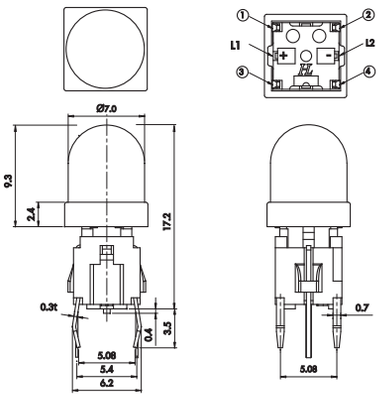

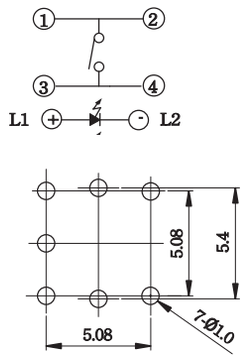

» Operating characteristics

Unit: mm

Dimensions **Circuit P.C.B Layout**

PB6147L

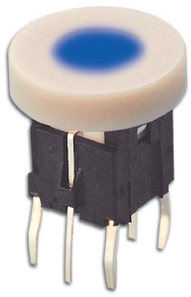

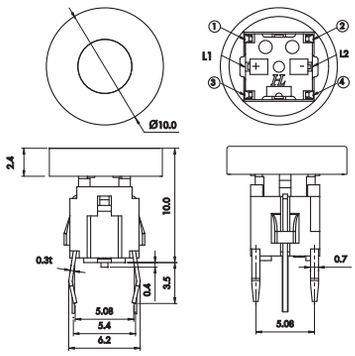

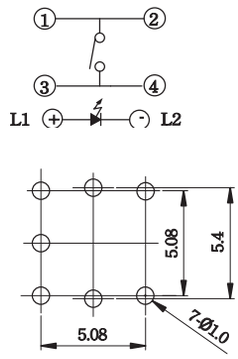

PB6148L

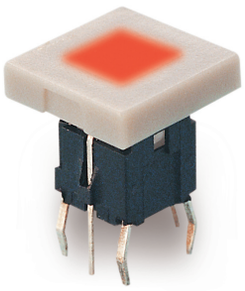

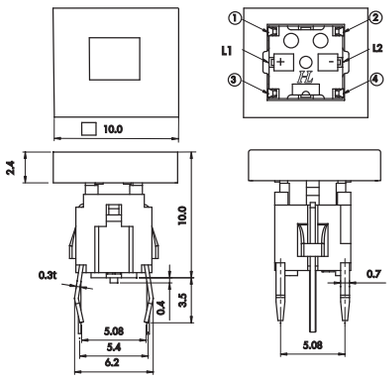

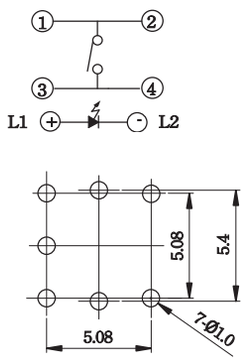

PB6149L-□-102

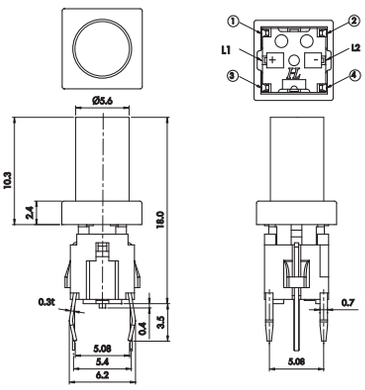

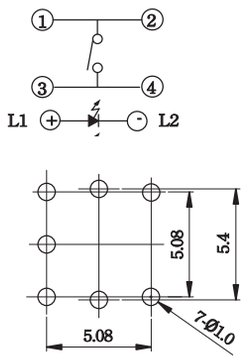

PB61410L

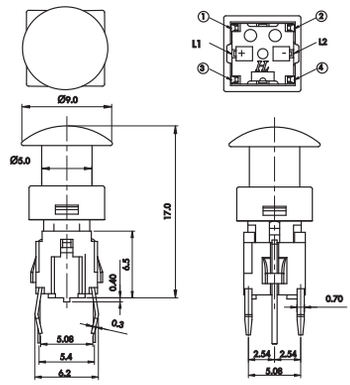

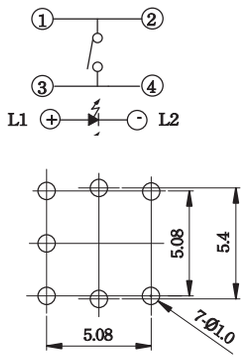

» Operating characteristics

Unit: mm

Dimensions **Circuit P.C.B Layout**

PB61411L-□-103

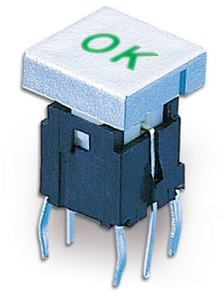

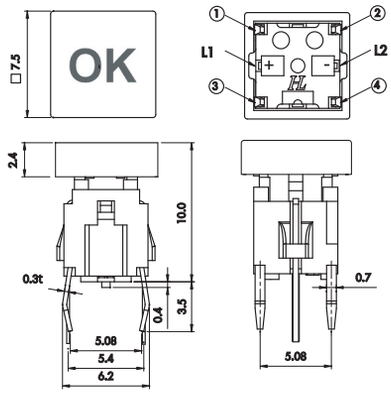

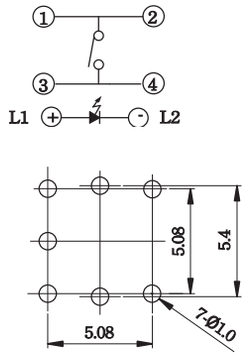

PB61412L-□-104

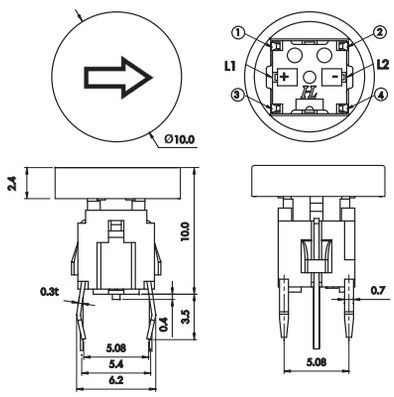

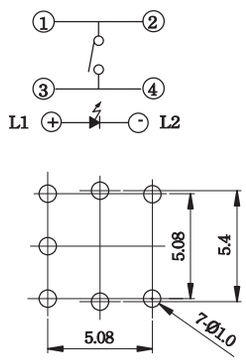
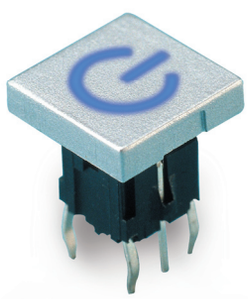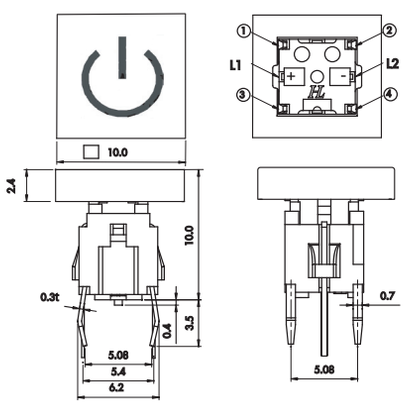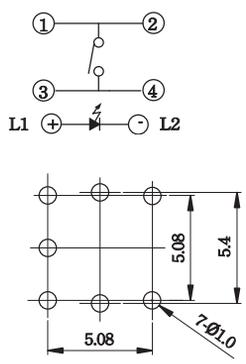
PB61413L-□-101