1600W Intelligent Single Output Battery Charger

RPB-1600 series

Dimension

L	*	W	*	H	
300	*	85	*	41 (1U)	mm
11.8	*	3.35	*	1.61 (1U)	inch

Front

Back

User's Manual

UL62368-1 BS EN/EN62368-1 TPTC004 IEC62368-1

Industrial Automate Telecom Network EV Marine

Features

- Charger for lead-acid batteries (Gel, flooded and AGM) and Li-ion batteries (lithium iron and lithium manganese)
- Built-in default 3 stage charging curves and programmable curve
- Built-in I^2C interface, PMBus protocol (Optional CANBus protocol)
- Universal AC input / Full range (Withstand 300VAC surge input for 5 seconds)
- Built-in active PFC function
- Forced air cooling by built-in DC fan
- Output voltage and current programmable
- Built-in OR-ing FET
- Active current sharing up to 4800W(2+1)
- Protections: Battery under voltage / Battery no connection / Short circuit / Over voltage / Over temperature
- Optional conformal coating
- 5 years warranty

Applications

- Large scale DC UPS or emergency backup system
- Marine battery charger module
- Electric scooter or vehicle charger station
- Wastewater treatment system
- Electrolysis system

GTIN CODE

MW Search: https://www.meanwell.com/serviceGTIN.aspx

Description

RPB-1600 is a 1.6KW single output AC/DC charger with a high power density up to 25W/inch^3. Three embedded charging curves, specifically for the lead-acid batteries, are built into each model. Thanks to the communication protocol, PMBus, and CANBus one spare curve can be further accommodated to fit other types of batteries such as the li-ion batteries. Each model is cooled by the thermostatically controlled fan. Moreover, RPB-1600 provides various protection mechanisms, offering the best safety for diversified types of applications.

Model Encoding

RPB - 1600 - 12 [ ]

- Communication protocol option
- Nominal voltage
- Output wattage
- Series name

Type	Communication Protocol	Note
Blank	PMBus protocol	In Stock
CAN	CANBus protocol	By request

sales@prom-elec.com / ООО ПРОМЭЛЕКТРОНИКА

SPECIFICATION

MODEL		RPB-1600-12	RPB-1600-24	RPB-1600-48
OUTPUT	BOOST CHARGE VOLTAGE(Vboost)(default)	14.4V	28.8V	57.6V
	FLOAT CHARGE VOLTAGE(Vfloat)(default)	13.8V	27.6V	55.2V
	CONSTANT CURRENT(CC)(default)	100A	55A	27.5A
	VOLTAGE ADJ. RANGE Note 5	By built-in potentiometer, SVR		
		11.5 ~ 15V	23.5 ~ 30V	47.5 ~ 58.8V
	RECOMMENDED BATTERY CAPACITY(AMP HOURS) Note.3	330 ~ 1000Ah	180 ~ 550Ah	90 ~ 270Ah
	LEAKAGE CURRENT FROM BATTERY (Typ.) Note.8	<45mA		
INPUT	VOLTAGE RANGE Note.4	90 ~ 264VAC 127 ~ 370VDC		
	FREQUENCY RANGE	47 ~ 63Hz		
	POWER FACTOR (Typ.)	0.97/230VAC at full load		
	EFFICIENCY (Typ.)	91%	92.5%	93.5%
	AC CURRENT (Typ.) Note.4	14A/115VAC 8A/230VAC	15A/115VAC 8.5A/230VAC	
	INRUSH CURRENT (Typ.)	COLD START 35A/230VAC		
	LEAKAGE CURRENT	<2mA / 240VAC		
PROTECTION	OVER VOLTAGE	15.75 ~ 18.75V	31.5 ~ 37.5V	63 ~ 75V
		Protection type : Shut down o/p voltage, re-power on to recover		
	OVER TEMPERATURE	Shut down o/p voltage, recovers automatically after temperature goes down		
FUNCTION	AUXILIARY POWER	5V @ 0.3A, 12V @ 0.8A		
	REMOTE ON-OFF CONTROL	By electrical signal or dry contact Power ON:short Power OFF:open. Please refer to Function Manual		
	OUTPUT VOLTAGE PROGRAMMABLE(PV) Note 5	Adjustment of output voltage is allowable to 75 ~ 125% of nominal output voltage Please refer to the Function Manual.		
	OUTPUT CURRENT PROGRAMMABLE(PC) Note 5	Adjustment of output current is allowable to 20 ~ 100% of rated current Please refer to the Function Manual.		
	TEMPERATURE COMPENSATION	-3mV / ℃ / cell / (12V = 6 cells ; 24V = 12 cells ; 48V = 24 cells)		
	ALARM SIGNAL	Isolated signal output for T-alarm and DC OK		
ENVIRONMENT	WORKING TEMP.	-30 ~ +70℃ (Refer to "Derating Curve")		
	WORKING HUMIDITY	20 ~ 90% RH non-condensing		
	STORAGE TEMP., HUMIDITY	-40 ~ +85℃, 10 ~ 95% RH non-condensing		
	TEMP. COEFFICIENT	±0.03%/℃ (0 ~ 50℃)		
	VIBRATION	10 ~ 500Hz, 2G 10min./1cycle, 60min. each along X, Y, Z axes		
SAFETY & EMC (Note 6)	SAFETY STANDARDS	UL62368-1, TUV BS EN/EN62368-1, EAC TP TC 004 approved		
	WITHSTAND VOLTAGE	I/P-O/P:3KVAC I/P-FG:2KVAC O/P-FG:1.5KVAC		
	ISOLATION RESISTANCE	I/P-O/P, I/P-FG, O/P-FG:100M Ohms / 500VDC / 25℃/ 70% RH		
	EMC EMISSION	Compliance to BS EN/EN55032 (CISPR32) Conduction Class B, Radiation Class A ; BS EN/EN61000-3-2,-3, EAC TP TC 020		
	EMC IMMUNITY	Compliance to BS EN/EN61000-4-2,3,4,5,6,8,11, BS EN/EN55035, EAC TP TC 020		
OTHERS	MTBF	457.7K hrs min. Telcordia SR-332 (Bellcore) ; 100.3K hrs min. MIL-HDBK-217F (25℃)		
	DIMENSION	300*85*41mm (L*W*H)		
	PACKING	2.1Kg;6pcs/13.6Kg/1.25CUFT		

NOTE

1. Modification for charger specification may be required for different battery specification. Please contact battery vendor and MEAN WELL for details.
2. All parameters NOT specially mentioned are measured at 230VAC input, rated load and 25℃ of ambient temperature.
3. This is MEAN WELL's suggested range. Please consult your battery manufacturer for their suggestions about maximum charging current limitation.
4. Derating may be needed under low input voltages. Please check the derating curve for more details.
5. PV/PC functions when users are not operating on PMBus/CANBus. SVR functions when users are neither operating on PMBus/CANBus nor using PV/PC.
6. The charger is considered a component which will be installed into a final equipment. All the EMC tests are been executed by mounting the unit on a 720mm*360mm metal plate with 1mm of thickness. The final equipment must be re-confirmed that it still meets EMC directives. For guidance on how to perform these EMC tests, please refer to "EMI testing of component power supplies." (as available on http://www.meanwell.com)
7. The ambient temperature derating of 3.5℃/1000m with fanless models and of 5℃/1000m with fan models for operating altitude higher than 2000m(6500ft).
8. When charging lead acid battery or battery without BMS, use breaker to disconnect charger and battery after fully charged.

※ Product Liability Disclaimer : For detailed information, please refer to https://www.meanwell.com/serviceDisclaimer.aspx

Block Diagram

PFC fosc : 90KHz
PWM fosc : 70KHz

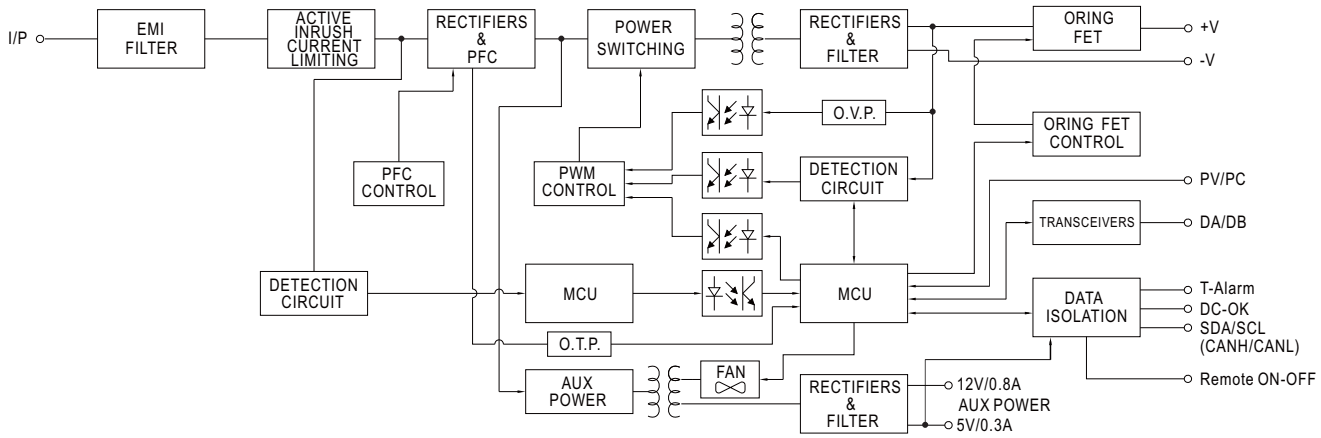

Derating Curve

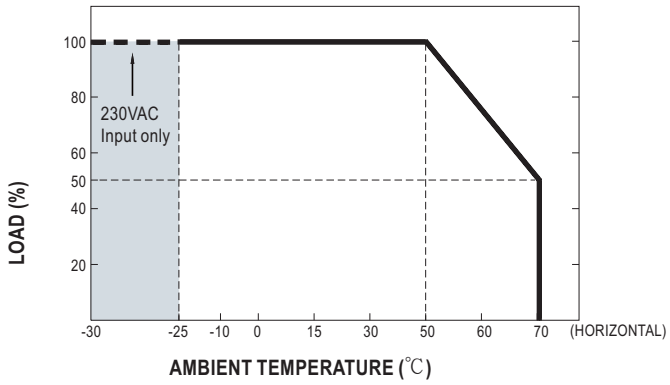

Static Characteristics

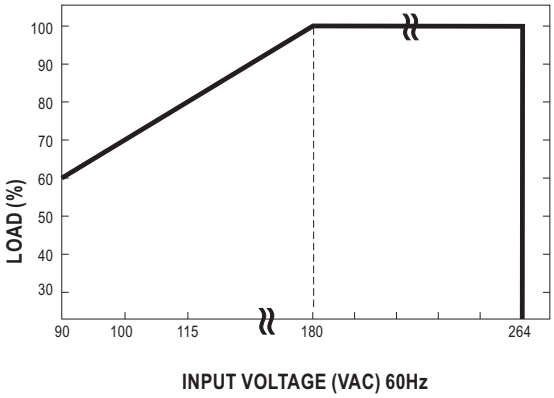

■ Function Manual

1.PMBus Communication Interface

※ RPB-1600 supports PMBus Rev. 1.1 with maximum 100KHz bus speed, allowing information reading, status monitoring, output trimming, etc. For details, please refer to the Installation Manual.

2.Charging Curve

※ By factory default, this charger performs the default curve which can be programmed via PMBus and CANBus. PIN10 and PIN14 on CN1 are thus shorted by default.

※ To disable/ enable the charging curve, change to a 2 stage curve, a different curve frequently used for certain types of batteries in the industry, switch to PMBus, CANBus, PV/PC or SVR control instead and so on, please refer to the Installation Manual.

※ To program the parameters of the charging curve, SBP-001, the smart battery charging programmer designed by MEAN WELL, and a personal computer are needed. Please contact MEAN WELL for details.

◎ Default 3 stage charging curve

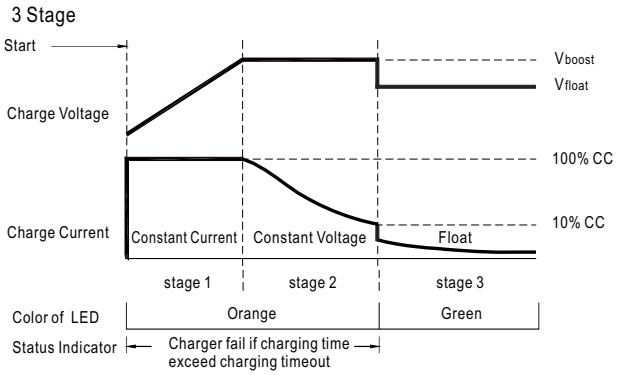

◎ Suitable for lead-acid batteries (flooded, Gel and AGM) and Li-ion batteries (lithium iron and lithium manganese).

◎ Embedded 3 stage charging curve

MODEL	Description	Vboost	Vfloat	CC (default)
12V	Default, programmable	14.4	13.8	100A
	Pre-defined, gel battery	14	13.6	
	Pre-defined, flooded battery	14.2	13.4	
	Pre-defined, AGM battery	14.5	13.5	
24V	Default, programmable	28.8	27.6	55A
	Pre-defined, gel battery	28	27.2	
	Pre-defined, flooded battery	28.4	26.8	
	Pre-defined, AGM battery	29	27	
48V	Default, programmable	57.6	55.2	27.5A
	Pre-defined, gel battery	56	54.4	
	Pre-defined, flooded battery	56.8	53.6	
	Pre-defined, AGM battery	58	54	

3. Front Panel LED Indicators & Corresponding Signal at Function Pins

LED	Description
Green	Float (stage 3)
Orange	Charging (stage 1 or stage 2)
Red	Abnormal status (OTP, OLP, Fan Fail, Charging timeout.)

4. Output Voltage Programming (or, PV / remote voltage programming / remote adjust / margin programming / dynamic voltage trim)

※ In addition to the adjustment via the built-in potentiometer, the output voltage can be trimmed by applying EXTERNAL VOLTAGE.

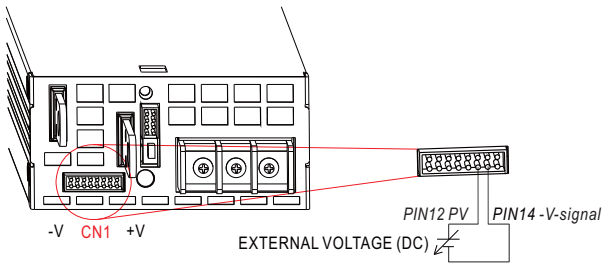

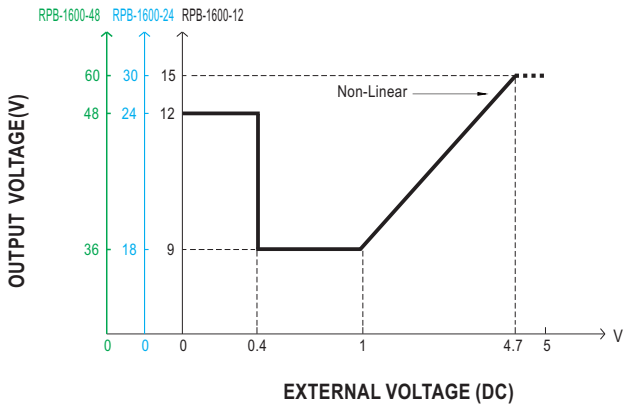

5. Output Current Programming (or, PC / remote current programming / dynamic current trim)

※ The output current can be trimmed to 20~100% of the rated current by applying EXTERNAL VOLTAGE.

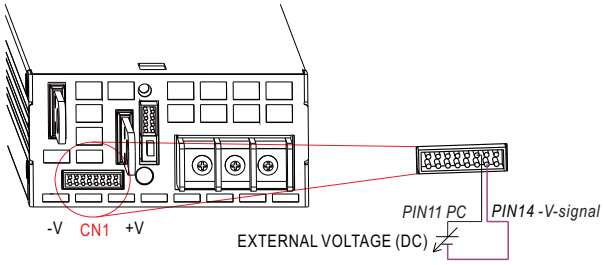

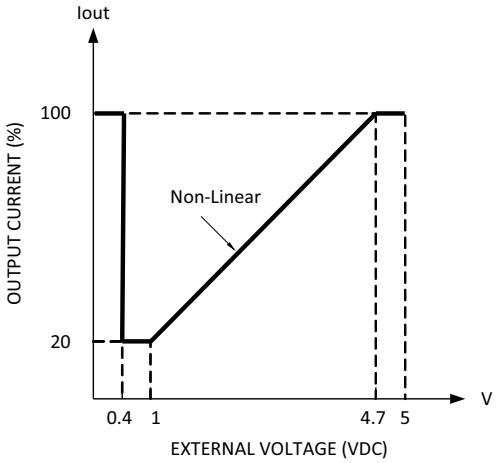

6. Remote ON-OFF Control

The power supply can be turned ON/OFF individually or along with other units in parallel by using the "Remote ON-OFF" function.

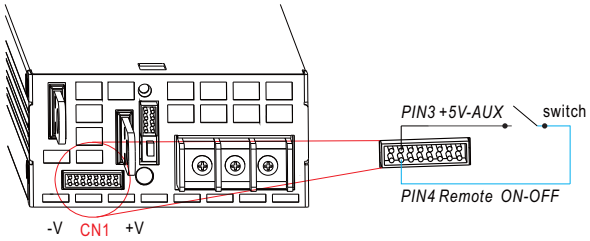

Between Remote ON-OFF and +5V-AUX	Power Supply Status
Switch Short	ON
Switch Open	OFF

7.Temperature Compensation

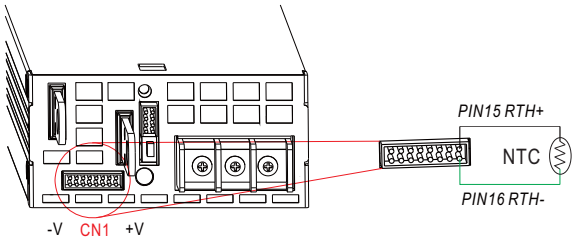

◎ To exploit the temperature compensation function, please attach the temperature sensor, NTC, which is enclosed with the charger, to the battery or the battery's vicinity.

◎ The charger is able to work normally without the NTC.

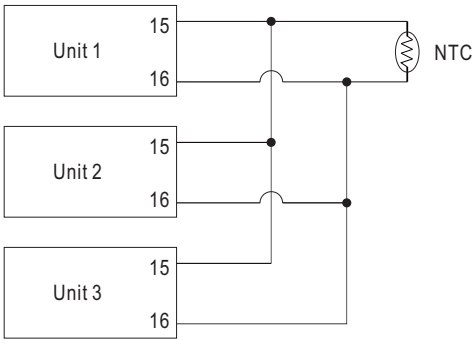

When multiple chargers are connected in parallel, please configure with the NTC as exhibited in the diagram .

If the temperature compensation is not required, RTH+ (PIN15) and RTH- (PIN16) from each unit still need to be connected.

8. Alarm Signal Output

※ There are 2 alarm signals, DC OK and T-ALARM, in TTL signal form, on CN1. These signals are isolated from output. The maximum sink current is 10mA.

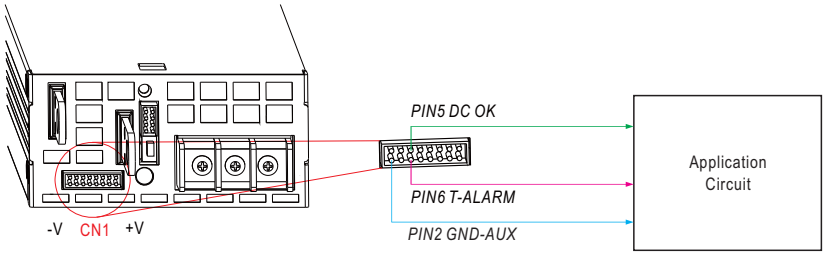

9.Current Sharing

RPB-1600 has the built-in active current sharing function and can be connected in parallel, up to 3 units, to provide higher output power as exhibited below :

※ The power supplies should be paralleled using short and large diameter wiring and then connected to the load.

※ Difference of output voltages among parallel units should be less than 0.2V.

※ The total output current must not exceed the value determined by the following equation:
Maximum output current at parallel operation=(Rated current per unit)×(Number of unit)×0.9

※ When the total output current is less than 5% of the total rated current, or say (5% of Rated current per unit)×(Number of unit) the current shared among units may not be balanced.

※ CN500/SW1 Function pin connection

Parallel	PSU1		PSU2		PSU3	
	CN500	SW1	CN500	SW1	CN500	SW1
1 unit	X	ON	—	—	—	—
2 unit	V	ON	V	ON	—	—
3 unit	V	ON	V	OFF	V	ON

(V : CN500 connected ; X : CN500 not connected.)

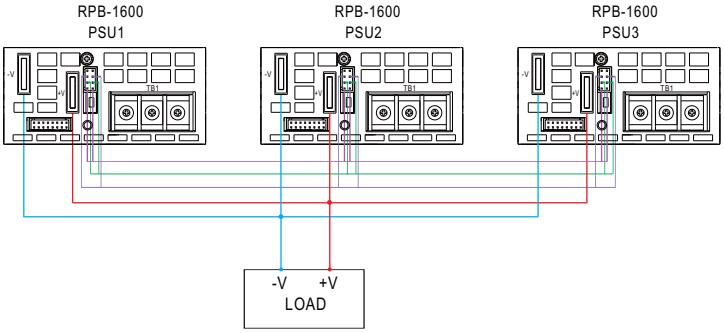

Fig 5.1

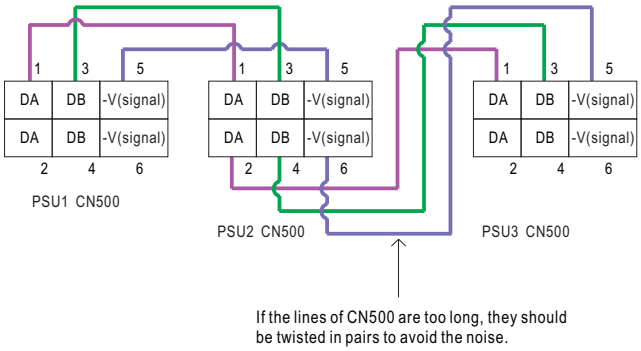

◎ DA,DB and -V(signal) are connected mutually in parallel.

■ Mechanical Specification

Case No.250 Unit:mm

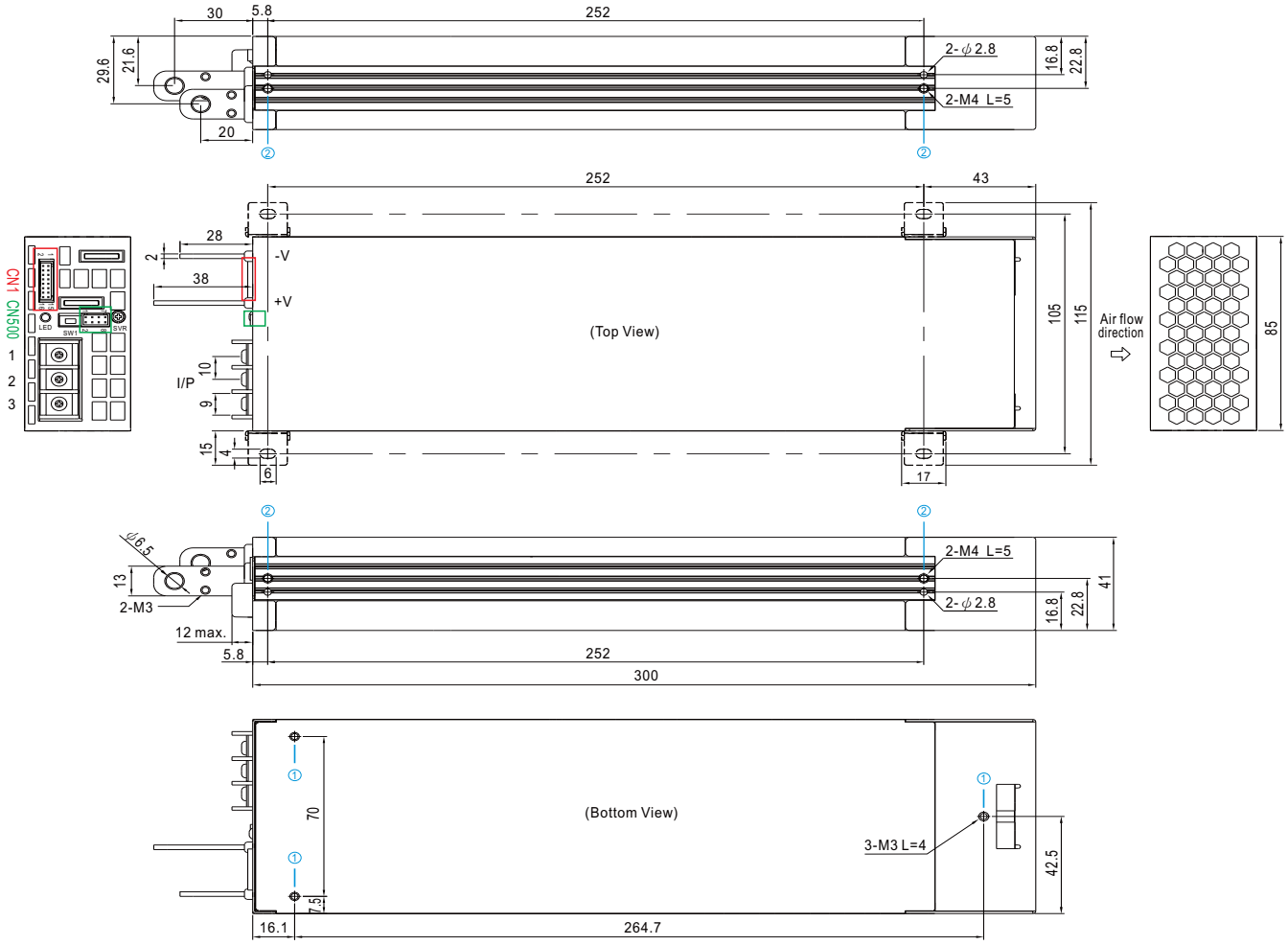

※ Mounting Instruction

Hole No.	Recommended Screw Size	MAX. Penetration Depth L	Recommended mounting torque
①	M3	4mm	6~8Kgf-cm
②	M4	5mm	7~10Kgf-cm

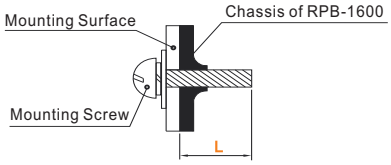

※Control Pin No. Assignment(CN1) : HRS DF11-16DP-2DS or equivalent

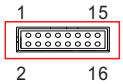

Mating Housing	HRS DF11-16DS or equivalent
Terminal	HRS DF11-**SC or equivalent

Pin No.	Function	Description
1	+12V-AUX	Auxiliary voltage output, 10.6~13.2V, referenced to GND-AUX (pin2). The maximum load current is 0.8A. This output has the built-in "Oring diodes" and is not controlled by "Remote ON-OFF".
2	GND-AUX	Auxiliary voltage output GND. The signal return is isolated from the output terminals (+V & -V).
3	+5V-AUX	Auxiliary voltage output, 4.5~5.5V, referenced to GND-AUX (pin2). The maximum load current is 0.3A. This output has the built-in "Oring diodes" and is not controlled by "Remote ON-OFF
4	Remote ON-OFF	The unit can turn the output ON/OFF by electrical signal or dry contact between *Remote ON/OFF* and *+5V-AUX*. (Note.2) Short (4.5 ~ 5.5V) : Power ON ; Open (-0.5 ~ 0.5V) : Power OFF ; The maximum input voltage is 5.5V.
5	$\overline{\text{DC-OK}}$	High (3.5 ~ 5.5V) : When the Vout ≦8V/16V/32V ±1V. Low (-0.5 ~ 0.5V) : When Vout ≧8V/16V/32V ±1V. The maximum sourcing current is 10mA and only for output. (Note.2) *DC OK* is associated with battery low protection.
6	T-ALARM	High (3.5 ~ 5.5V) : When the internal temperature exceeds the limit of temperature alarm, or when Fan fails. Low (-0.5 ~ 0.5V) : When the internal temperature is normal, and when Fan normally works. The maximum sourcing current is 10mA and only for output(Note.2)
7,8,9	A0,A1,A2	PMBus / CANBus interface address lines. (Note.1)
10	D0	Charging mechanism control. This pin determines, for charging operation, whether charging curve is used, or control over PMBus, PV/PC or SVR is used. Please refer to the installation Manual. (Note.1)
11	PC	Connection for output current programming. (Note.1)
12	PV	Connection for output voltage programming. (Note.1)
13	+V (Signal)	Positive output voltage signal. It cannot be connected directly to the load.
14	-V (Signal)	Negative output voltage signal. It is for certain function reference; it cannot be connected directly to the load.
15	RTH+	Temperature sensor(NTC, 5KOhm) comes along with the charger can be connected to the unit to allow temperature compensation of the charging voltage.
16	RTH-	

Note1: Non-isolated signal, referenced to the [-V(signal)].
Note2: Isolated signal, referenced to GND-AUX.

※AC Input Terminal Pin No. Assignment

Pin No.	Assignment	Diagram	Maximum mounting torque
1	FG ⏚		8Kgf-cm
2	AC/N		
3	AC/L		

※Control Pin No. Assignment(CN500) : HRS DF11-8DP-2DS or equivalent

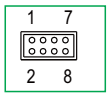

Mating Housing	HRS DF11-8DS or equivalent
Terminal	HRS DF11-**SC or equivalent

Pin No.	Function	Description
1,2	DA	Differential digital signal for parallel control. (Note.1)
3,4	DB	Differential digital signal for parallel control. (Note.1)
5,6	-V (Signal)	Negative output voltage signal. It is for certain function reference; it cannot be connected directly to the load.
7	SDA	For PMBus model: Serial Data used in the PMBus interface. (Note.2)
	CANH	For CANBus model: Data line used in CANBus interface. (Note.2)
8	SCL	For PMBus model: Serial Clock used in the PMBus interface. (Note.2)
	CANL	For CANBus model: Data line used in CANBus interface. (Note.2)

Note1: Non-isolated signal, referenced to [-V(signal)].
Note2: Isolated signal, referenced to GND-AUX.

※Control Pin No. Assignment(SW1)

Pin No.	Function	Description
1,2	Terminal resistance	SW1 is the selector of terminal resistor that is designed for DA/DB signals and parallel control function.