45W Triple Output Switching Power Supply

PT-45 series

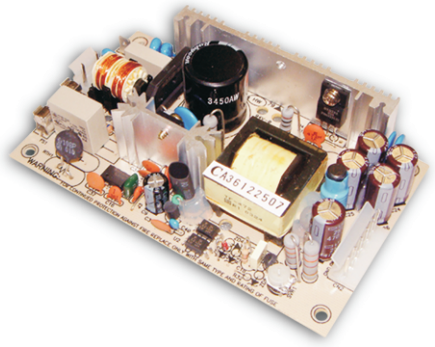

■ Features :

- Universal AC input/Full range
- Low leakage current<0.5mA
- Protections: Short circuit / Overload / Over voltage
- Cooling by free air convection
- 100% full load burn-in test
- Fixed switching frequency at 65KHz
- 2 years warranty

SPECIFICATION

MODEL		PT-45A			PT-45B			PT-45C		
OUTPUT	OUTPUT NUMBER	CH1	CH2	CH3	CH1	CH2	CH3	CH1	CH2	CH3
	DC VOLTAGE	5V	12V	-5V	5V	12V	-12V	5V	15V	-15V
	RATED CURRENT	3A	2A	0.3A	3A	2A	0.3A	3A	1.6A	0.3A
	CURRENT RANGE	0.4 ~ 5A	0.2 ~ 2.5A	0 ~ 0.5A	0.4 ~ 5A	0.2 ~ 2.5A	0 ~ 0.5A	0.4 ~ 5A	0.2 ~ 2.3A	0 ~ 0.5A
	RATED POWER	40.5W			42.6W			43.5W		
	OUTPUT POWER (max.)	Rated output power for convection; 52W with 18CFM min. Forced air								
	RIPPLE & NOISE (max.) Note.2	50mVp-p	120mVp-p	50mVp-p	50mVp-p	120mVp-p	100mVp-p	50mVp-p	120mVp-p	100mVp-p
	VOLTAGE ADJ. RANGE	CH1:4.75 ~ 5.5V								
	VOLTAGE TOLERANCE Note.3	±4.0%	±7.0%	±5.0%	±4.0%	±7.0%	±5.0%	±4.0%	±7.0%	±5.0%
	LINE REGULATION	±1.0%	±2.0%	±1.0%	±1.0%	±2.0%	±1.0%	±1.0%	±2.0%	±1.0%
	LOAD REGULATION	±3.0%	±4.0%	±1.0%	±3.0%	±4.0%	±1.0%	±3.0%	±4.0%	±1.0%
	SETUP, RISE TIME	800ms, 20ms at full load								
	HOLD UP TIME (Typ.)	60ms at full load								
INPUT	VOLTAGE RANGE	90 ~ 264VAC 127 ~370VDC								
	FREQUENCY RANGE	47 ~ 440Hz								
	EFFICIENCY (Typ.)	75%			75%			75%		
	AC CURRENT (Typ.)	1A/115VAC 0.7A/230VAC								
	INRUSH CURRENT (Typ.)	COLD START 15A/115VAC 30A/230VAC								
	LEAKAGE CURRENT	<0.75mA								
PROTECTION	OVERLOAD	53 ~ 75W rated output power								
		Protection type : Hiccup mode, recovers automatically after fault condition is removed.								
	OVER VOLTAGE	CH1: 5.75 ~ 6.75VDC								
		Protection type : Hiccup mode, recovers automatically after fault condition is removed.								
ENVIRONMENT	WORKING TEMP.	-10 ~ +60℃ (Refer to output load derating curve)								
	WORKING HUMIDITY	20 ~ 90% RH non-condensing								
	STORAGE TEMP., HUMIDITY	-20 ~ +85℃, 10 ~ 95% RH								
	TEMP. COEFFICIENT	±0.04%/℃ (0 ~ 50℃) on +5V output								
	VIBRATION	10 ~ 500Hz, 2G 10min./1cycle, Period for 60min.each along X, Y, Z axes								
SAFETY & EMC (Note 4)	SAFETY STANDARDS	UL60950-1, TUV EN60950-1 Approved								
	WITHSTAND VOLTAGE	I/P-O/P:3KVAC I/P-FG:1.5KVAC O/P-FG:0.5KVAC 1min.								
	ISOLATION RESISTANCE	I/P-O/P, I/P-FG, O/P-FG:100M Ohms/500VDC								
	EMI CONDUCTION & RADIATION	Compliance to EN55022 (CISPR22) Class B								
	HARMONIC CURRENT	Compliance to EN61000-3-2,-3								
	EMS IMMUNITY	Compliance to EN61000-4-2,3,4,5,6,8,11; ENV50204, EN55024, Light industry level, criteria A								
OTHERS	MTBF	288.1K hrs min. MIL-HDBK-217F (25℃)								
	DIMENSION	127*76*28mm (L*W*H)								
	PACKING	0.21Kg; 72pcs/17Kg/1.35CUFT								
NOTE	1. All parameters NOT specially mentioned are measured at 230VAC input, rated load and 25℃ of ambient temperature. 2. Ripple & noise are measured at 20MHz of bandwidth by using a 12" twisted pair-wire terminated with a 0.1uf & 47uf parallel capacitor. 3. Tolerance : includes set up tolerance, line regulation and load regulation. 4. The power supply is considered a component which will be installed into a final equipment. The final equipment must be re-confirmed that it still meets EMC directives. 5. Mounting holes M1 and M2 should be grounded for EMI purposes.									

sales@prom-elec.com / ООО ПРОМЭЛЕКТРОНИКА

■ Mechanical Specification

Unit:mm

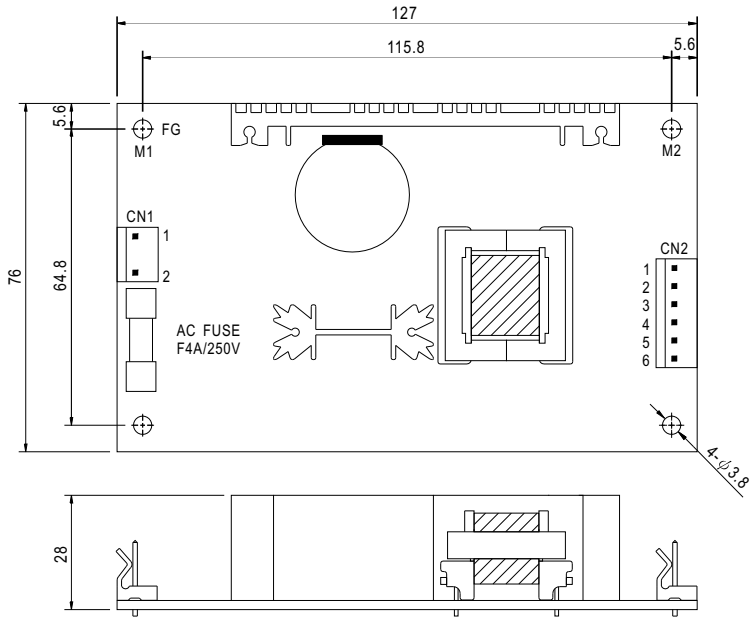

AC Input Connector (CN1) : Molex 5277-02 or equivalent

Pin No.	Assignment	Mating Housing	Terminal
1	AC/N	Molex 5195 or equivalent	Molex 5194 or equivalent
2	AC/L		

DC Output Connector (CN2) : Molex 5273-06 or equivalent

Pin No.	Assignment	Mating Housing	Terminal
1	+V	Molex 5195 or equivalent	Molex 5194 or equivalent
2,3	+5V		
4,5	COM		
6	-V		

■ Block Diagram

fosc : 65KHz

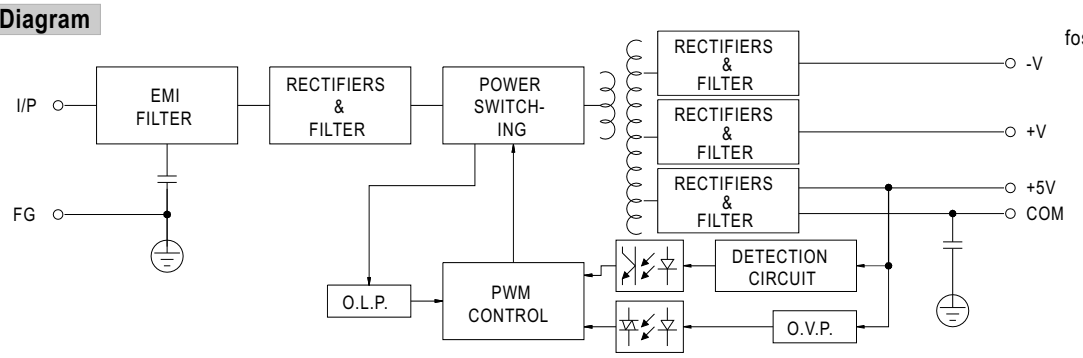

■ Derating Curve

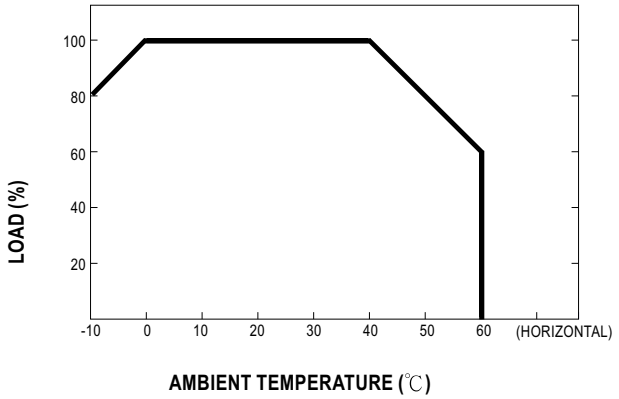
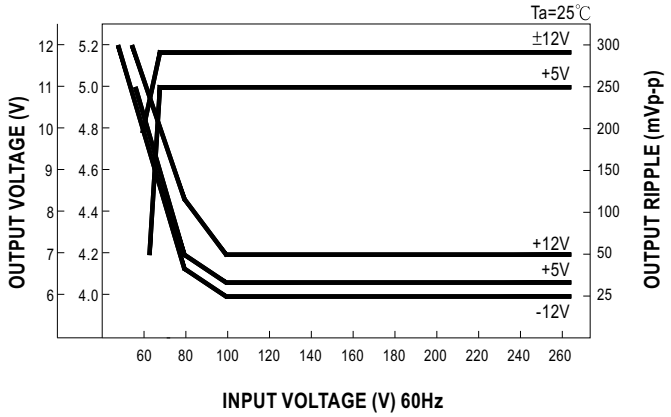
■ Static Characteristics (B)