Sirectifier®
www.sirectifier.com

ETATRONIC
www.etatronic.com

产品样本 CATALOGUE
Power Semiconductors

2025-2027

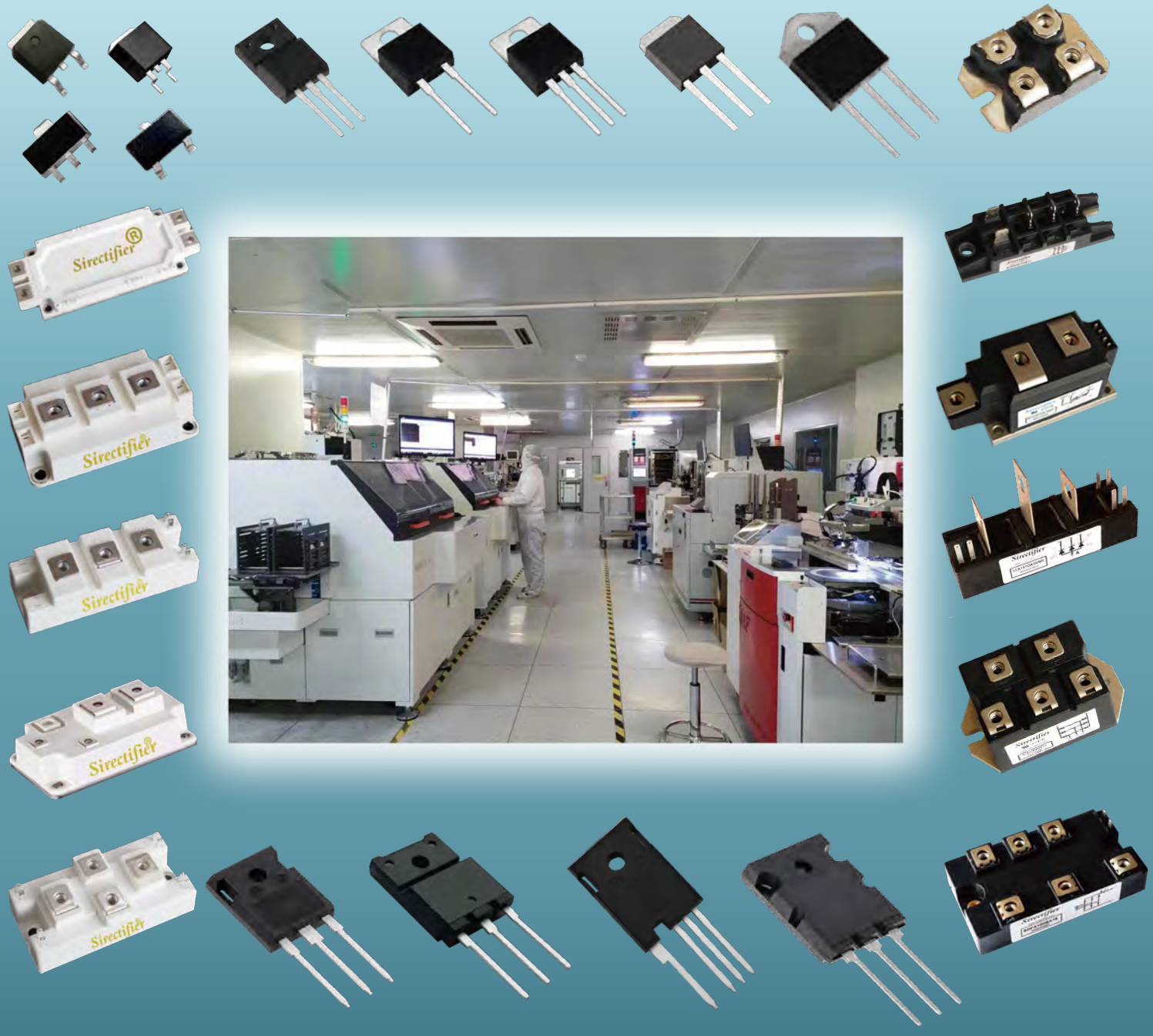

江苏亿塔电子科技有限公司
ETATRONIC Technology Co., Ltd.
江苏矽莱克电子科技有限公司
SIRECTIFIER Electronics Technology Corp.

sales@prom-elec.com / ООО ПРОМЭЛЕКТРОНИКА

Sirectifier®
www.sirectifier.com

ETATRONIC
www.etatronic.com

企业简介
COMPANY PROFILE

江苏矽莱克电子科技有限公司创立于1993年，是一家专注于功率半导体器件的研发、制造和销售的工厂实体企业。工厂位于江苏省常州市钟楼区富林路15号。

江苏亿塔电子科技有限公司是以海归领军人物沈力博士为主，专业从事 IGBT、MOSFET、FRED、第三代宽禁带半导体SiC碳化硅功率器件等新型电力电子器件的研发、生产和销售的制造型企业，第九批常州市“龙城英才计划”领军型创业人才项目。

江苏矽莱克电子科技有限公司有超过8400平方米的洁净厂房，其中无尘车间超过2000平方米。车间内的大量自动化设备，为矽莱克的产品提供了优良的品质保证。

30多年的发展，江苏矽莱克电子科技有限公司已经成长为行业中的骨干企业。除了老一代专业技术人员和管理人员外，近年还大量引进了优秀的海归技术人员和卓越的行业专家。

SIRECTIFIER Electronics Technology Corporation, founded in 1993, is a manufacturer focusing on the research and development, manufacturing and sales of power semiconductor devices. The factory is located at No. 15, Fulin Road, Zhonglou District, Changzhou City, Jiangsu Province, China. Electronics Technology Corporation has grown into a back-bone enterprise in the industry. In addition to the older gener-ation of professional technicians and managements, in recent years, a large number of excellent Doctors and outstanding domestic professionals have been introduced. SIRECTIFIER Electronics Technology Corporation has more than 8400 square meters of clean workshop, including more than 2000 square meters of clean room of 10K class. A large number of automation equipment in the workshop provides excellent quality assurance for SIRECTIFIER's products. With more than 30 years of development, SIRECTIFIER Electronics Technol-ogy Corporation has grown into a backbone enterprise in the industry. In addition to the older generation of professional technicians and manage-ments, in recent years, a large number of excellent Doctors and outstanding domestic professionals have been introduced.

产品及封装形式
Products and package style

SiC碳化硅MOSFET SiC MOSFET:
13mΩ~240mΩ / 650V, 1200V, 1700V

SiC二极管 SiC Diode(SBD):
5A~75A/650V, 1200V, 1700V

IGBT分立器件 IGBT Discretes:
6A~120A/600V, 1200V, 1700V

IGBT模块 IGBT Modules:
15A~600A/600V, 1200V, 1700V

MOSFET分立器件和模块 MOSFET Discretes and Modules:
5A~450A/10V~1000V

FRED分立器件和模块 FRED Discretes and Modules:
5A~600A/200V~1700V

晶闸管（可控硅）分立器件和模块 Thyristor (SCR) Discretes and Modules:
5A~1000A/600V~2400V

大功率晶体管分立器件 Transistor Discretes
100mA~15A/10V~500V

双向可控硅分立器件和模块 Triac Discretes and Modules:
5A~100A/400V~1600V

肖特基势垒二极管和模块 Schottky Barrier Diode Discretes and Modules:
5A~300A/45V~200V

三端稳压器3-Terminal Regulators:
7805~7818, 7905~7918

封装形式Package style:
SOT-23, SOT-89, TO-126, TO-251, TO-252, TO-262, TO-263, TO-220, TO-220F, TO-247, TO-247-4L, TO-247P, TO-218, TO-3P, TO-264, SOT-227, Isolated and Non-Isolated Multi-chips Power Modules.

ETATRONIC

全球领先的功率半导体器件制造商

Global leading manufacturer of power semiconductors

CONTENTS 目录

- 产品命名方法 Products Nomenclature 1~2
  - IGBT、MOSFET分立器件和功率模块命名方法 1
    IGBT Discretes and Power Modules Nomenclature
  - 碳化硅SiC分立器件和功率模块命名方法 1
    SiC Schottky Diodes and SiC MOSFET Discretes and Power Module Nomenclature
  - 晶闸管、整流管分立器件和功率模块命名方法 2
    Thyristor / Diode Discretes and Power Modules Nomenclature
- SiC碳化硅器件 SiC Power Devices 3
  - SiC碳化硅肖特基二极管分立器件 SiC Schottky Diode Discretes 3
  - SiC碳化硅MOSFET分立器件 SiC MOSFET Discretes 3
- IGBT绝缘栅双极型晶体管 (IGBTs) 4-6
  - IGBT分立器件 IGBT Discretes 4
  - IGBT功率模块 IGBT Power Modules 5-6
- MOSFET场效应晶体管 (MOSFETs) 7
  - MOSFET分立器件 MOSFET Discretes 7
- 快恢复二极管 Fast Recovery Diodes 8-12
  - 超快恢复二极管 8
    Ultra Fast Recovery Diodes
  - 软恢复特性高性能高结温超快恢复外延二极管 9-10
    Soft Recovery Behaviour HiPer High Tjm Ultra Fast Recovery Epitaxial Diodes
  - 软恢复特性超快恢复外延二极管模块 10-12
    Soft Recovery Behaviour Ultra Fast Recovery Epitaxial Diode Modules
- 功率晶体管 (Power Transistors) 13
  - 功率晶体管分立器件 Power Transistor Discretes 13
- 晶闸管(可控硅) Thyristors（SCRs) 14-17
  - 晶闸管-晶闸管模块 Thyristor-Thyristor Modules 14
  - 晶闸管(可控硅)分立器件 Thyristor Discretes（SCRs) 15
  - 晶闸管-二极管模块 Thyristor-Diode Modules 16
  - 反并联晶闸管模块（固态交流开关) 17
    Anti-Paralled Thyristor-Thyristor Modules (Solid State AC Switches)
  - 单相桥式半控模块(带续流二极管) 17
    Single Phase Half Controlled Bridge Modules with Free Wheeling Diode
  - 三相桥式半控模块(带续流二极管) 17
    Three Phase Half Controlled Bridge Modules with Free Wheeling Diode
  - 三相桥式半控模块(不带续流二极管) 17
    Three Phase Half Controlled Bridge Modules without Free Wheeling Diode
  - 三相桥式全控模块(不带续流二极管) 17
    Three Phase Full Controlled Bridge Modules without Free Wheeling Diode
  - 三相半桥式晶闸管模块（晶闸管电焊机专用） 15
    Three Phase Thyristor Half Bridge Modules（For Welding Machines)
- 肖特基势垒二极管 Schottky Barrier Diodes 18
  - 高结温低漏电流肖特基势垒二极管 18
    High Tjm Low IRRM Schottky Barrier Diodes
  - 高结温低漏电流肖特基势垒二极管模块 18-19
    High Tjm Low IRRM Schottky Barrier Diode Modules
- 整流二极管 Diode Rectifiers 20-22
  - 整流二极管分立器件 Diode Discretes 20
  - 单相整流桥 Single Phase Bridge Rectifiers 20
  - 单相桥式整流模块 Single Phase Bridge Rectifier Modules 20
  - 三相桥式整流模块 Three Phase Bridge Rectifier Modules 21
  - 二极管-二极管整流模块 Diode-Diode Modules 22
- 双向可控硅 Triacs 22
  - 绝缘式双向可控硅 Isolated Triacs 22
  - 非绝缘式双向可控硅 Non-Isolated Triacs 22
- 功率半导体产品外形结构图 Power Semiconductors Outline Drawings 23-30

IGBT分立器件和功率模块命名方法
IGBT Discretes and Power Modules Nomenclature

IGBT分立器件命名方法
IGBT Discretes Nomenclature

S G 40 T 120 U D B2

S: SIRECTIFIER

Circuit Configuration

G: Single switch with one IGBT (for discrete)

Nominal Current

Current Rating , For Example : Ic=40A

Chips Technology

N: NPT IGBT
S: SPT$^+$ IGBT
T: Trench Gate Field Stop IGBT
NF: Planar Gate Field Stop IGBT

Voltage

Voltage×10, For Example: 60=600V 65=650V
120=1200V 125=1250V
170=1700V

Speed Characteristic

Full Current for Free Wheeling Diode
K: Standard Frequency (≤18KHz)
U: High Frequency (>18KHz)
Empty: Half current for Free Wheeling Diode

Free Wheeling Diode

D: With FRD
Empty: Without FRD

Package Style

A1 : TO-220F **A4** : TO-252(DPAK)
A2 : TO-220AB **A5** : TO-262
A3 : TO-251(IPAK) **A6** : TO-263(D^{2}PAK)
A7 : SOT-23-3L **A8** : SOT-89-3L
B1 : TO-3P **B5** : TO-247P
B2 : TO-247AD **S** : SOT-227
B3 : TO-264
B4 : TO-3PF

IGBT功率模块命名方法
IGBT Power Module Nomenclature

S G G 75 T 120 U C1

S: SIRECTIFIER

Circuit Configuration

G : Single switch with one IGBT (for discrete)
GO : Single switch with one IGBT and FRD
GG : Half bridge (Phase Leg, two IGBTs with FRDs)
GD : Boost Chopper module
DG : Buck Chopper module
3LG : 3-level IGBT module
4G : H bridge
6G : 3 Phase Inverter(sixpack)
7G : 3P Rectifier+PFC+3Phase IGBT Inverter

Nominal Current

Current Rating , For Example : Ic=75A

Chips Technology

N : NPT IGBT
S : SPT$^+$ IGBT
T : Trench Gate Field Stop IGBT
NF: Planar Gate Field Stop IGBT

Voltage

Voltage×10, For Example: 60=600V 65=650V
120=1200V 125=1250V
170=1700V

Speed

K : Standard Frequency
U : High Frequency
S : High Frequency with Half Current FWD

Package Style

C1 : 34mm equvilent
C2 : 62mm equvilent
C3 : 62mm for Single Switch only equvilent
C4 : conoPack 4 equvilent
C5 : EconoDual 3 equvilent
C6 : EconoPack 2
C6A : EconoPIM 2
C6B : EconoPIM 2
C7 : EconoPack 3
C7A : EconoPIM 3
C7B : EconoPIM 3
C9 : 4 Packs (H Bridge)
E1 : ECO-PAK1
E2 : ECO-PAK2
P1 : EasyPIM 1B
P2 : EasyPIM 2B

MOSFET分立器件和功率模块命名方法
MOSFET Discretes and Power Modules Nomenclature

MOSFET分立器件命名方法
MOSFET Discretes Nomenclature

S MOS 20 N 50 B2

S: SIRECTIFIER brand

Chips Technology

MOS: Standard Silicon VDMOS
JM: Super Junction MOSFET

Nominal Current

Current Rating , For Example : ID=20A

Channel Type

N: N Channel Enhancement Mode
P: P Channel Enhancement Mode

Voltage

Voltage×10, For Example: 50=500V 06=60V

Package Style

A1 : TO-220F **A4** : TO-252(DPAK)
A2 : TO-220AB **A5** : TO-262
A3 : TO-251(IPAK) **A6** : TO-263(D^{2}PAK)
A7 : SOT-23-3L **A8** : SOT-89-3L
B1 : TO-3P **B5** : TO-247P
B2 : TO-247AD **S** : SOT-227
B3 : TO-264
B4 : TO-3PF

MOSFET功率模块命名方法
MOSFET Power Module Nomenclature

S MM 100 N 10 C1

S: SIRECTIFIER brand

Chips Type

MO : Single switch with one MOSFET
MM: Half bridge (Phase Leg, two MOSFETS)
MD : Boost Chopper module
DM : Buck Chopper module
4M : H bridge

Nominal Current

Current Rating , For Example : ID=100A

Channel Type

N: N Channel Enhancement Mode
P: P Channel Enhancement Mode

Voltage

Voltage×10, For Example: 10=100V 06=60V 170=1700V

Package Style

C1: 34mm equvilent
C2: 62mm equvilent
C3: 62mm for Single Switch only equvilent
C9: 4 Pack equvilent

SiC碳化硅肖特基二极管分立器件和Mn SFET命名方法
SiC Schottky Diode Discretes and SiC MOSFET Discretes Nomenclature

SiC碳化硅肖特基二极管分立器件命名方法
SiC Schottky Diode Discretes Nomenclature

S CD 20 65 CT A2

S: SIRECTIFIER brand

Chips Type

CD: SiC Schottky Diode

Nominal Current

Current Rating , For Example : IFAV=20A

Voltage

Voltage×10, For Example: 50=500V 16=60V

Connetion

CT: Common Cathode in TO-220
PT: Common Cathode in TO-247
Empty: Single Chip

Package Style

A1: TO-220F **A4**: TO-252(DPAK)
A2: TO-220AB **A5**: TO-262
A3: TO-251(IPAK) **A6**: TO-263(D^{2}PAK)
B1: TO-3P **B5**: TO-247P
B2: TO-247AD **S** : SOT-227
B3: TO-264
B4: TO-3PF
A11: TO-220F-2L
A21: TO-220AC
B11: TO-3P-2L **B51**: TO-247P-2L
B21: TO-247AC

SiC碳化硅MOSFET分立器件命名方法
SiC MOSFET Discretes Nomenclature

S CM 60 120 R40 B2

S: SIRECTIFIER brand

Chips Type

CM: SiC N Channel Enhancement Mode MOSFET

Nominal Current

Current Rating , For Example : ID=60A

Voltage

Voltage×10, For Example: 65=650V 120=1200V

RDS(ON)

R40: 40mΩ
R80: 80mΩ

Package Style

A1: TO-220F **A4**: TO-252(DPAK)
A2: TO-220AB **A5**: TO-262
A3: TO-251(IPAK) **A6**: TO-263(D^{2}PAK)
A7: SOT-23-3L **A8**: SOT-89-3L
B1: TO-3P **B5**: TO-247P
B2: TO-247AD **S** : SOT-227
B3: TO-264
B4: TO-3PF

晶闸管/整流管分立器件和功率模块命名方法
Thyristor / Didoe discretes and Power ModulesNomenclature

晶闸管分立器件命名方法Thyristor Discretes Nomenclature

S TYN 16 65

S: SIRECTIFIER

Circuit Configuration
TYN: Single Die Thyristor (for discrete)
TO: Single Die Thyristor

Nominal Current
Current Rating , For Example : $I_{T(RMS)}$=65A

Voltage
Voltage×100

整流管分立器件命名方法Diode Discretes Nomenclature

S DD 25 N 16

S: SIRECTIFIER

Circuit Configuration
DO: Single Die Diode (for discrete)
DD: Diode-Diode Phase Leg Connection

Nominal Current
Current Rating , For Example : IF=25A

Gate style
N: Diode

Voltage
Voltage×100

晶闸管、整流管功率模块命名方法
Thyristor 、 Diode Power Modules Nomenclature

S TT 90 GK 16 B

S: SIRECTIFIER

Circuit Configuration
DD:Diode-Diode Phase Leg Module
DA:Diode-Diode Common Anode Module
DK:Diode-Diode Common Cathode Module
TYN: Single Die Thyristor (for discrete)
TO:Single Die Thyristor
TT:Thyristor-Thyristor Phase Leg Module
TA:Thyristor-Thyristor Common Anode Module
TK:Thyristor-Thyristor Common Cathode Module
TD:Thyristor-Diode Phase Leg Module
DT:Diode-Thyristor Phase Leg Module
SAC: Solid State AC Switch
1PHB:Single Phase Half Controlled Bridge Module
3PHB:Three Phase Half Controlled Bridge Module
3PFB:Three Phase Full Controlled Bridge Module
3TA:Three Phase Thyristor Half Bridge Module
DEF:Fast Recovery Diode Phase Leg Module
DF:Single Die Fast Recovery Diode Module
1PDB:Single Phase Bridge Rectifier Module
3PDB:Three Phase Bridge Rectifier Module
DKF:Fast Recovery Diode Common Cathode Module
DAF:Fast Recovery Diode Common Anode Module
DEF:Fast Recovery Diode Phase Leg Module
DF:Single Die Fast Recovery Diode Module

Package Style
B: With Copper Baseplate
BT: Pressure Contact Technology with BusBar Terminal
PT: Pressure Contact Technology with Screw Terminal
Without Suffix: DCB Baseplate
NB: Non-Isolated with Copper Baseplate
P: Plastic Flat Full package Isolated
S: SOT-227

Voltage
Voltage×100
For Example: 16=1600V

Gate style
G: With Gate and assistant Cathode**K**
G: With Gate and without assistant Cathode
N: Diode module

Nominal Current
Current Rating , For Example : IT=90A

双向可控硅命名方法
Triac discretes and Power Modules Nomenclature

S BTA 41 - 600 BW

S: SIRECTIFIER
(For Power Module)

Circuit Configuration
BTA: Isolated package
BTB: Non-Isolated package

Nominal Current
Current Rating
For Ex: IT(RMS)=41A,

Sensitivity and type
B=50mA standard , BW=50mA snubberless
C=25mA standard , SW=35mA snubberless
SW=10mA logic level

Voltage
Voltage, 600=600V

碳化硅SiC肖特基二极管分立器件
SiC Schottky Diode Discretes

型号 TYPE	电气特性Electrical Characteristics						封装外形 Package Style	内部电路 Circuits
	$V_R=V_{RRM}$	I_{FAV}	I_{FSM}	V_F	I_{RRM}	T_{JMAX}		
	V	A	A	V	u A	℃		
SCD0665A11	650	6	60.00	1.27	1.00	175	TO-220F-2L	1
SCD0665A21	650	6	60.00	1.27	1.00	175	TO-220AC	1
SCD0865A11	650	8	72.00	1.40	1.00	175	TO-220F-2L	1
SCD0865A21	650	8	72.00	1.40	1.00	175	TO-220AC	1
SCD1065A11	650	10	90.00	1.40	1.00	175	TO-220F-2L	1
SCD1065A21	650	10	90.00	1.40	1.00	175	TO-220AC	1
SCD2065A21	650	20	170.00	1.40	1.50	175	TO-220AC	1
SCD1265CTA1	650	2X6	2X60	1.40	1.00	175	TO-220F	2
SCD1265CTA2	650	2X6	2X60	1.40	1.00	175	TO-220AB	2
SCD1665CTA1	650	2x8	2X72	1.40	1.00	175	TO-220F	2
SCD1665CTA2	650	2x8	2X72	1.40	1.00	175	TO-220AB	2
SCD2065PTB2	650	2x10	2X100	1.40	1.00	175	TO-247AD	2
SCD4065PTB2	650	2x20	2X180	1.40	1.50	175	TO-247AD	2
SCD03120A11	1200	3	30.00	1.55	1.00	175	TO-220F-2L	1
SCD03120A21	1200	3	30.00	1.55	1.00	175	TO-220AC	1
SCD10120A11	1200	10	100.00	1.55	1.00	175	TO-220-2L	1
SCD10120A21	1200	10	100.00	1.55	1.00	175	TO-220AC	1
SCD15120A21	1200	15	150.00	1.55	1.50	175	TO-220AC	1
SCD15120B21	1200	15	150.00	1.55	1.50	175	TO-247AC	1
SCD20120A21	1200	20	180.00	1.55	3.00	175	TO-220AC	1
SCD20120B21	1200	20	180.00	1.55	3.00	175	TO-247AC	1
SCD30120B21	1200	30	240.00	1.55	5.00	175	TO-247AC	1
SCD40120B21	1200	40	280.00	1.55	5.00	175	TO-247AC	1
SCD50120B21	1200	50	350.00	1.55	8.00	175	TO-247AC	1
SCD06120CTA1	1200	2X3	2x30	1.55	1.00	175	TO-220F	2
SCD06120CTA2	1200	2X3	2X30	1.55	1.00	175	TO-220AB	2
SCD20120CTA1	1200	2X10	2X100	1.55	1.00	175	TO-220F	2
SCD20120CTA2	1200	2X10	2X100	1.55	1.00	175	TO-220AB	2
SCD30120PTB2	1200	2X15	2X150	1.55	1.50	175	TO-247AD	2
SCD40120PTB2	1200	2X20	2X180	1.55	3.00	175	TO-247AD	2
SCD60120PTB2	1200	2X30	2X240	1.55	5.00	175	TO-247AD	2
SCD80120PTB2	1200	2X40	2X280	1.55	5.00	175	TO-247AD	2
SCD100120PTB2	1200	2X50	2X350	1.55	8.00	175	TO-264	2
SCD10170B21	1700	10	135.00	1.60	1.50	175	TO-247AC	1
SCD25170B21	1700	25	225.00	1.60	1.50	175	TO-247AC	1
SCD50170B21	1700	50	500.00	1.60	1.50	175	TO-247AC	1

外形图 Outlines

TO-220F-2L

TO-220AC

TO-220AB

TO-220F-3L

TO-247AC

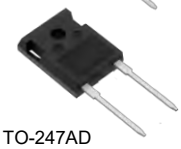

TO-247AD

TO-264

内部电路Circuit

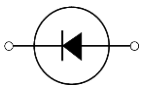

Circuit 1

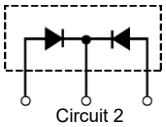

Circuit 2

碳化硅MOSFET分立器件
SiC MOSFET Discretes

型号 TYPE	电气特性Electrical Characteristics							封装外形 Package Style	沟道极性 Configu -rations
	V_{DSS}	I_{D25} Tc=25℃	$R_{DS(ON)}$	I_{DSS}	V_{GSTH}	T_{JMAX}	Qg		
	V	A	mΩ	uA	V	℃	(nc)		
650V Series SiC MOSFET Discretes									
SCM13365R15B2/B6	650	133	15.00	5.00	2.80	175	117	TO-247AD /TO-247-4L	N CH
SCM11665R17B2/B6	650	116	17.00	5.00	2.70	175	127	TO-247AD /TO-247-4L	N CH
SCM10865R20B2/B6	650	108	20.00	5.00	2.70	175	139	TO-247AD /TO-247-4L	N CH
SCM8565R23B2/B6	650	85	23.00	5.00	2.70	175	70	TO-247AD /TO-247-4L	N CH
SCM7865R30B2/B6	650	78	30.00	3.00	2.70	175	90	TO-247AD /TO-247-4L	N CH
SCM5065R40B2/B6	650	50	40.00	3.00	2.70	175	30	TO-247AD /TO-247-4L	N CH
SCM3865R60B2/B6	650	38	60.00	2.00	2.70	175	54	TO-247AD /TO-247-4L	N CH
SCM2065R120B2/B6	650	20	120.00	1.00	2.70	175	29	TO-247AD /TO-247-4L	N CH
1200V Series SiC MOSFET Discretes									
SCM160120R13B2/B6	1200	160	13	5.00	2.60	175	300	TO-247AD /TO-247-4L	N CH
SCM120120R16B2/B6	1200	120	16	5.00	2.60	175	270	TO-247AD /TO-247-4L	N CH
SCM100120R20B2/B6	1200	100	20	5.00	2.60	175	220	TO-247AD /TO-247-4L	N CH
SCM80120R25B2/B6	1200	80	25	5.00	2.60	175	140	TO-247AD /TO-247-4L	N CH
SCM60120R40B2/B6	1200	60	40	5.00	2.60	175	108	TO-247AD /TO-247-4L	N CH
SCM40120R60B2/B6	1200	40	60	5.00	2.60	175	84	TO-247AD /TO-247-4L	N CH
SCM30120R80B2/B6	1200	30	80	2.00	2.60	175	68	TO-247AD /TO-247-4L	N CH
SCM18120R160B2/B6	1200	18	160	1.00	2.60	175	25	TO-247AD /TO-247-4L	N CH
SCM09120R280B2/B6	1200	9	280	1.00	2.60	175	15	TO-247AD /TO-247-4L	N CH

外形图 Outlines

TO-247AD

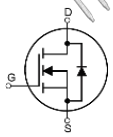

TO-247-4L

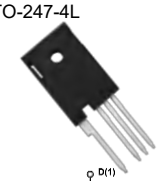

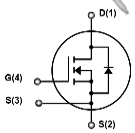

N Channel

IGBT分立器件
IGBT Discretes

型号 TYPE	电气特性Electrical Characteristics						封装外形 Package Style	内部电路 Circuits	外形图 Outlines
	V_{CES}	I_{C90} Tc=90℃	V_{CEsat} @25°C typ.	E_{OFF} @125°C typ.	I_F (FWD) T_C=90℃	$R_{th(J-C)}$			
	V	A	V	mJ	A	K/W			
SG20T65DA2	650	20	1.60	0.10	20	0.90	TO-220AB	1	
SG20T65DA1	650	20	1.60	0.10	20	1.10	TO-220F	1	
SG20T65DA6	650	20	1.60	0.10	20	0.95	TO-263	1	
SG30T65DB2	650	30	1.80	0.15	30	1.60	TO-247AD	1	
SG40T65DB2	650	40	1.80	0.82	20	0.80	TO-247AD	1	
SG40T65UDB2	650	40	1.80	0.82	40	0.78	TO-247AD	1	
SG50T65UDB2	650	50	1.80	1.25	50	0.45	TO-247AD	1	
SG75T65B2	650	75	1.80	3.10	-	0.38	TO-247AD	2	
SG75T65UDB2	650	75	1.80	3.10	75	0.35	TO-247AD	1	
SG80T65B2	650	80	1.80	3.25	-	0.28	TO-247AD	2	
SG80T65UDB3	650	80	1.80	3.25	80	0.23	TO-264	1	
SG100T65UDB3	650	100	1.80	5.05	100	0.20	TO-264	1	
SG100T60S	600	100	1.75	1.34	-	0.385	SOT-227	4	
SG100T60DS	600	100	1.75	1.34	100	0.38	SOT-227	3	
SG120T65UDB5	650	120	1.80	5.80	120	0.25	TO-247P	1	
SG120T65UDB3	650	120	1.80	5.80	120	0.23	TO-264	1	
SG160T60DB3	600	80	2.10	2.65	25	0.36	TO-264	1	
CT60AM-18F	900	60	2.10	2.85	20	0.35	TO-264	1	
SG10T120UDB2	1200	10	1.60	0.50	10	0.69	TO-247AD	1	
SG15T120UDB2	1200	15	1.90	0.28	15	0.63	TO-247AD	1	
SG25T120DB2	1200	25	2.00	2.90	15	0.40	TO-247AD	1	
SG25T120UDB2	1200	25	2.00	2.90	25	0.38	TO-247AD	1	
SG40T120DB2	1200	40	2.00	0.80	20	0.45	TO-247AD	1	
SG40T120UDB2	1200	40	2.00	0.80	40	0.45	TO-247AD	1	
SG40T120DB3	1200	40	2.00	0.80	20	0.43	TO-264	1	
SG50T120DB3	1200	50	2.10	0.80	20	0.54	TO-264	1	
SG50T120DB5	1200	50	2.10	0.80	20	0.56	TO-247P	1	
SG60T120DB3	1200	60	2.30	0.80	30	0.38	TO-264	1	
SG60T120UDB3	1200	60	2.30	2.85	60	0.35	TO-264	1	
SG60T121UDB3	1200	60	2.10	2.85	60	0.35	TO-264	1	
SG75T120UDB3	1200	75	2.10	2.40	75	0.32	TO-264	1	
SG75T120DS	1200	75	2.10	2.40	75	0.34	SOT-227	3	
SG15N135RCB2	1350	15	2.50	0.28	8	0.54	TO-247AD	1	
SG20N135RCB2	1350	20	2.50	0.32	12	0.45	TO-247AD	1	
SG25N135RCB2	1350	25	2.50	0.95	15	0.42	TO-247AD	1	
SG40N135RCB2	1350	40	2.50	1.40	20	0.35	TO-247AD	1	

TO-220AB

TO-220F

TO-263

TO-247AD

TO-264

SOT-227

内部电路图 Circuit

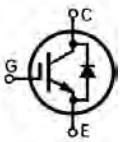

Cricuit 1

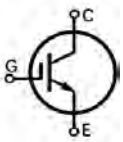

Cricuit 2

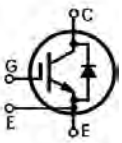

Cricuit 3

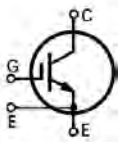

Cricuit 4

IGBT功率模块
IGBT Power Modules

型号 TYPE	电气特性Electrical Characteristics						封装外形 Package Style	内部电路 Circuit
	V_{CES}	I_{C25} Tc=25℃	I_{C90} Tc=90℃	V_{CEsat} @25°C typ.	E_{OFF} @125°C typ.	$R_{th(J-C)}$		
	V	A	A	V	mJ	K/W		
T Series: 600-650V Half Bridge IGBT Module								
SGG50T60UC1	600	100	50	1.65	1.90	0.68	C1 (Fig. 1)	1
SGG75T60UC1	600	150	75	1.55	1.80	0.57	C1 (Fig. 1)	1
SGG100T60UC1	600	200	100	1.65	1.34	0.37	C1 (Fig. 1)	1
SGG145T60UC1	600	290	145	1.65	2.40	0.24	C1 (Fig. 1)	1
SGG150T60UC2	600	300	150	1.65	2.40	0.19	C2 (Fig.26)	1
SGG195T60UC1	600	390	195	1.65	7.80	0.22	C1 (Fig. 1)	1
SGG200T60UC2	600	400	200	1.65	7.80	0.17	C2 (Fig.26)	1
SGG200T65UC2	650	400	200	1.65	7.80	0.17	C2 (Fig.26)	1
SGG300T60UC2	600	600	300	1.65	8.40	0.14	C2 (Fig.26)	1
SGG300T65UC2	650	600	300	1.65	8.40	0.14	C2 (Fig.26)	1
SGG400T60UC2	600	800	400	1.65	10.40	0.12	C2 (Fig.26)	1
T Series: 600-650V Boost Chopper / Buck Chopper IGBT Module								
SGD(SDG)50T60UC1	600	100	50	1.65	1.90	0.68	C1 (Fig. 1)	2(3)
SGD(SDG)75T60UC1	600	150	75	1.55	1.80	0.57	C1 (Fig. 1)	2(3)
SGD(SDG)100T60UC1	600	200	100	1.65	1.34	0.37	C1 (Fig. 1)	2(3)
SGD(SDG)145T60UC1	600	290	145	1.65	2.40	0.24	C1 (Fig. 1)	2(3)
SGD(SDG)150T60UC2	600	300	150	1.65	2.40	0.19	C2 (Fig.26)	2(3)
SGD(SDG)195T60UC1	600	390	195	1.65	7.80	0.22	C1 (Fig. 1)	2(3)
SGD(SDG)200T60UC2	600	400	200	1.65	7.80	0.17	C2 (Fig.26)	2(3)
SGD(SDG)200T65UC2	650	400	200	1.65	7.80	0.17	C2 (Fig.26)	2(3)
SGD(SDG)300T60UC2	600	600	300	1.65	8.40	0.14	C2 (Fig.26)	2(3)
SGD(SDG)300T65UC2	650	600	300	1.65	8.40	0.14	C2 (Fig.26)	2(3)
SGD(SDG)400T60UC2	600	800	400	1.65	10.40	0.12	C2 (Fig.26)	2(3)
T Series: 1200V Half Bridge IGBT Module								
SGG50T120UC1	1200	75	50	1.95	4.50	0.53	C1 (Fig. 1)	1
SGG75T120UC1	1200	100	75	1.95	6.90	0.38	C1 (Fig. 1)	1
SGG100T120UC1	1200	150	100	1.95	10.20	0.27	C1 (Fig. 1)	1
SGG145T120UC1	1200	200	145	1.95	15.80	0.19	C1 (Fig. 1)	1
SGG150T120UC2	1200	200	150	1.95	18.70	0.16	C2 (Fig.26)	1
SGG200T120UC2	1200	300	200	1.95	20.00	0.14	C2 (Fig.26)	1
SGG300T120UC2	1200	400	300	1.95	29.00	0.11	C2 (Fig.26)	1
SGG400T120UC2	1200	600	400	1.95	42.00	0.072	C2 (Fig.26)	1
SGG450T120UC2	1200	700	450	1.95	49.00	0.062	C2 (Fig.26)	1
SGO400T120UC3	1200	600	400	1.95	44.00	0.072	C3 (Fig.58)	4
SGO600T120UC3	1200	900	600	1.95	63.00	0.049	C3 (Fig.58)	4
SGO800T120UC3	1200	1000	800	1.95	95.00	0.042	C3 (Fig.58)	4
SGG600T120UC5	1200	900	600	1.95	76.00	0.04	C5 (Fig.5)	5
SGG700T120UC5	1200	900	700	1.95	65.00	0.084	C5 (Fig.5)	5
NF Series: 1200V Half Bridge IGBT Module								
SGG50NF120UC1	1200	100	50	2.05	1.90	0.450	C1 (Fig. 1)	1
SGG75NF120UC1	1200	150	75	2.05	2.10	0.380	C1 (Fig. 1)	1
SGG75NF120SC1	1200	150	75	2.05	2.10	0.420	C1 (Fig. 1)	1
SGG100NF120UC1	1200	200	100	2.05	2.30	0.310	C1 (Fig. 1)	1
SGG100NF120SC1	1200	200	100	2.10	2.30	0.350	C1 (Fig. 1)	1
SGG145NF120UC1	1200	290	145	2.10	9.30	0.165	C1 (Fig. 1)	1
SGG145NF120SC1	1200	290	145	2.10	9.30	0.210	C1 (Fig. 1)	1
SGG150NF120UC2	1200	300	150	2.10	9.30	0.125	C2 (Fig.26)	1
SGG200NF120UC2	1200	400	200	2.10	13.10	0.099	C2 (Fig.26)	1
SGG300NF120UC2	1200	600	300	2.10	16.20	0.089	C2 (Fig.26)	1
SGG400NF120UC2	1200	800	400	2.10	25.00	0.072	C2 (Fig.26)	1
SGO400NF120UC3	1200	800	400	2.10	25.00	0.072	C3 (Fig. 58)	4
SGO600NF120UC3	1200	1200	600	2.10	32.00	0.130	C3 (Fig. 58)	4
NF Series: 1200V Boost Chopper / Buck Chopper IGBT Module								
SGD(SDG)50NF120UC1	1200	100	50	2.05	1.90	0.450	C1 (Fig. 1)	2(3)
SGD(SDG)75NF120UC1	1200	150	75	2.05	2.10	0.380	C1 (Fig. 1)	2(3)
SGD(SDG)100NF120UC1	1200	200	100	2.05	2.30	0.310	C1 (Fig. 1)	2(3)
SGD(SDG)145NF120UC1	1200	290	145	2.10	9.30	0.165	C1 (Fig. 1)	2(3)

外形图 Outlines

C1 (Fig.1)

C2 (Fig.26)

C3 (Fig. 58)

C5 (Fig.5)

内部电路图Circuit

Half Bridge (SGG Series)

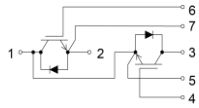

Circuit 1

Boost Chopper (SGD Series)

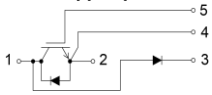

Circuit 2

Buck Chopper (SDG Series)

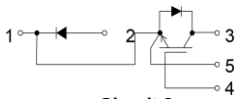

Circuit 3

One Unit (SGO Series)

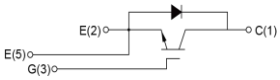

Circuit 4

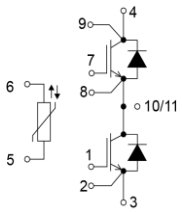

Circuit5

型号 TYPE	电气特性Electrical Characteristics						封装外形 Package Style	内部电路 Circuit	外形图 Outlines
	V_{CES}	I_{C25} Tc=25℃	I_{C90} Tc=90℃	V_{CEsat} @25°C typ.	E_{OFF} @125°C typ.	$R_{th(J-C)}$			
	V	A	A	V	mJ	K/W			
SGD(SDG)150NF120UC2	1200	300	150	2.10	9.30	0.125	C2 (Fig.26)	2(3)	C2 (Fig.26)
SGD(SDG)200NF120UC2	1200	400	200	2.10	13.10	0.099	C2 (Fig.26)	2(3)	
SGD(SDG)300NF120UC2	1200	600	300	2.10	16.20	0.089	C2 (Fig.26)	2(3)	
SGD(SDG)400NF120UC2	1200	800	400	2.10	25.00	0.072	C2 (Fig.26)	2(3)	
N125 Series: 1200V Half Bridge IGBT Module									
SGG75N125UC1	1200	75	50	3.00	5.00	0.270	C1 (Fig. 1)	1	
SGG100N125UC1	1200	100	75	3.00	3.50	0.180	C1 (Fig. 1)	1	
SGG145N125UC1	1200	145	100	3.00	4.50	0.160	C1 (Fig. 1)	1	C1 (Fig.1)
SGG150N125UC2	1200	150	100	3.00	4.50	0.120	C2 (Fig.26)	1	
SGG200N125UC2	1200	200	150	3.00	8.00	0.095	C2 (Fig.26)	1	
SGG300N125UC2	1200	300	200	3.00	11.00	0.075	C2 (Fig.26)	1	
SGG400N125UC2	1200	400	300	3.00	18.00	0.050	C2 (Fig.26)	1	
SGO600N125UC3	1200	600	400	3.00	22.00	0.041	C3 (Fig. 58)	4	
T Series: 1700V Half Bridge IGBT Module									
SGG75T170UC1	1700	125	75	1.95	29.00	0.304	C1 (Fig. 1)	1	
SGG100T170UC1	1700	160	100	1.95	39.00	0.234	C1 (Fig. 1)	1	
SGG145T170UC1	1700	260	145	1.95	59.00	0.162	C1 (Fig. 1)	1	
SGG150T170UC2	1700	240	150	1.95	59.00	0.161	C2 (Fig.26)	1	C3 (Fig. 58)
SGG200T170UC2	1700	300	200	1.95	79.00	0.122	C2 (Fig.26)	1	
SGG300T170UC2	1700	400	300	1.95	121.00	0.083	C2 (Fig.26)	1	
SGG300T170UC5	1700	400	300	1.95	121.00	0.094	C5 (Fig.)	1	
SGG400T170UC2	1700	600	400	1.95	180.00	0.066	C2 (Fig.26)	1	
SGG450T170UC5	1700	670	450	2.10	118.00	0.091	C5 (Fig.5)	1	
SGG600T170UC5	1700	900	600	2.10	118.00	0.085	C5 (Fig.5)	1	
T Series: 1700V Boost Chopper / Buck Chopper IGBT Module									
SGD(SDG)75T170UC1	1700	125	75	1.95	29.00	0.304	C1 (Fig. 1)	2(3)	
SGD(SDG)100T170UC1	1700	160	100	1.95	39.00	0.234	C1 (Fig. 1)	2(3)	C5 (Fig.5)
SGD(SDG)145T170UC1	1700	260	145	1.95	59.00	0.162	C1 (Fig. 1)	2(3)	
SGD(SDG)150T170UC2	1700	240	150	1.95	59.00	0.161	C2 (Fig.26)	2(3)	
SGD(SDG)200T170UC2	1700	300	200	1.95	79.00	0.122	C2 (Fig.26)	2(3)	
SGD(SDG)300T170UC2	1700	400	300	1.95	121.00	0.083	C2 (Fig.26)	2(3)	
SGD(SDG)400T170UC2	1700	600	400	1.95	180.00	0.066	C2 (Fig.26)	2(3)	
4 Units H-Bridge IGBT Module									
S4G40T60SC9	600	80	40	1.80	0.80	0.480	C9 (Fig.16)	6	
S4G40T60UC9	600	80	40	1.80	0.80	0.475	C9 (Fig.16)	6	
S4G50T60SC9	600	100	50	1.80	0.90	0.370	C9 (Fig.16)	6	
S4G50T60UC9	600	100	50	1.80	0.90	0.365	C9 (Fig.16)	6	
S4G60T60SC9	600	120	60	1.80	1.10	0.250	C9 (Fig.16)	6	
S4G60T60UC9	600	120	60	1.80	1.10	0.245	C9 (Fig.16)	6	
S4G75T60SC9	600	150	75	1.80	2.00	0.175	C9 (Fig.16)	6	
S4G75T60UC9	600	150	75	1.80	2.00	0.170	C9 (Fig.16)	6	C9 (Fig.16)
S4G100T60SC9	600	200	100	1.80	2.30	0.155	C9 (Fig.16)	6	
S4G100T60UC9	600	200	100	1.80	2.30	0.150	C9 (Fig.16)	6	
S4G25T120SC9	1200	50	25	1.90	0.65	0.650	C9 (Fig.16)	6	
S4G40T120SC9	1200	80	40	1.95	1.40	0.580	C9 (Fig.16)	6	
S4G50T120SC9	1200	81	50	1.95	4.50	0.530	C9 (Fig.16)	6	
S4G75T120SC9	1200	150	75	1.95	6.30	0.375	C9 (Fig.16)	6	
S4G75N125UC9	1200	75	50	3.10	2.50	0.530	C9 (Fig.16)	6	

内部电路图Circuit

Half Bridge (SGG Series)

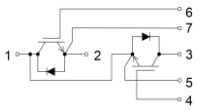

Circuit 1

Boost Chopper (SGD Series)

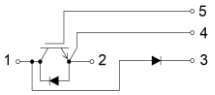

Circuit 2

Buck Chopper (SDG Series)

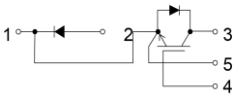

Circuit 3

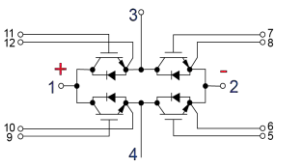

Circuit 6

功率MOSFET场效应晶体管分立器件
Power MOSFET Discretes

型号 TYPE	电气特性Electrical Characteristics						封装外形 Package Style	内部电路图及沟道极性 Circuits & Configurations
	V_{DSS}	I_{D25} Tc=25℃	$R_{DS(ON)}$	V_{GSS}	V_{TH}	$R_{th(J-C)}$		
	V	A	mΩ	V	V	K/W		
SMOS2333A	-12	-7	19.50	±12	-0.40	50.00	SOT-23-3L	Circuit 1/P CH
SMOS28P60A1	-60	-28	37.00	±20	-2.00	1.39	TO-220F	Circuit 1/P CH
SMOS28P60A6	-60	-28	37.00	±20	-2.00	0.50	TO-263	Circuit 1/P CH
SMOS75N075A2	75	75	6.50	±20	2.00	0.80	TO-220AB	Circuit 2/N CH
SMOS75N075A6	75	75	6.50	±20	2.00	0.85	TO-263	Circuit 2/N CH
SMOS25N10A1	100	25	31.00	±20	2.00	4.79	TO-220F	Circuit 2/N CH
SMOS36N10A2	100	36	17.00	±20	2.00	1.05	TO-220AB	Circuit 2/N CH
SMOS100N10A2	100	100	6.60	±20	3.00	0.88	TO-220AB	Circuit 2/N CH
SMOS100N10A6	100	100	6.60	±20	3.00	0.88	TO-263	Circuit 2/N CH
SMOS100N10A3	100	100	6.60	±20	3.00	1.20	TO-251	Circuit 2/N CH
SMOS100N10A4	100	100	6.60	±20	3.00	1.25	TO-252	Circuit 2/N CH
SMOS36P10B2	-100	-36	17.00	±20	-2.00	0.40	TO-247AD	Circuit 1/P CH
SMOS40N20A2	200	40	70.00	±20	2.00	0.50	TO-220AB	Circuit 2/N CH
SMOS40N20A6	200	40	70.00	±20	2.00	0.52	TO-263	Circuit 2/N CH
SMOS50N20A2	200	50	50.00	±20	2.00	0.45	TO-220AB	Circuit 2/N CH
SMOS50N20A6	200	50	50.00	±20	2.00	0.47	TO-263	Circuit 2/N CH
SMOS60N20A2	200	60	42.00	±20	2.00	0.42	TO-220AB	Circuit 2/N CH
SMOS50N25A2	250	50	31.00	±20	2.00	0.50	TO-220AB	Circuit 2/N CH
SMOS50N25A6	250	50	31.00	±20	2.00	0.52	TO-263	Circuit 2/N CH
SMOS50N25B2	250	50	50.00	±20	3.00	0.57	TO-247AD	Circuit 2/N CH
SMOS110N25B2	250	110	25.00	±20	3.00	0.44	TO-247AD	Circuit 2/N CH
SMOS38N26A1	260	38	14.00	±20	2.00	3.80	TO-220F	Circuit 2/N CH
SMOS11N45A1	450	11	530.00	±20	2.00	4.20	TO-220F	Circuit 2/N CH
SMOS9N50A2	500	9	800.00	±20	2.00	0.67	TO-220AB	Circuit 2/N CH
SMOS13N50A1	500	13	420.00	±20	2.00	2.15	TO-220F	Circuit 2/N CH
SMOS13N50A2	500	13	420.00	±20	2.00	0.51	TO-220AB	Circuit 2/N CH
SMOS16N50A2	500	16	320.00	±20	2.00	0.49	TO-220AB	Circuit 2/N CH
SMOS16N50B2	500	16	300.00	±20	2.00	0.48	TO-247AD	Circuit 2/N CH
SMOS21N50B2	500	21	250.00	±20	2.00	0.44	TO-247AD	Circuit 2/N CH
IRFP460	500	21	250.00	±20	2.00	0.44	TO-247AD	Circuit 2/N CH
SMOS24N50B3	500	24	160.00	±20	2.00	0.52	TO-264	Circuit 2/N CH
SMOS26N50B3	500	26	200.00	±20	2.00	0.50	TO-264	Circuit 2/N CH
SMOS44N50B3	500	44	120.00	±20	2.00	0.24	TO-264	Circuit 2/N CH
SMOS44N50S	500	44	120.00	±20	2.00	0.70	SOT-227	Circuit 3/N CH
SMOS44N50U2S	500	44	120.00	±20	2.00	0.38	SOT-227	Circuit 5/N CH
SMOS44N50U3S	500	44	120.00	±20	2.00	0.38	SOT-227	Circuit 4/N CH
SMOS48N50S	500	48	100.00	±20	2.00	0.66	SOT-227	Circuit 3/N CH
SMOS48N50U2S	500	48	100.00	±20	2.00	0.26	SOT-227	Circuit 5/N CH
SMOS48N50U3S	500	48	100.00	±20	2.00	0.26	SOT-227	Circuit 4/N CH
SMOS98N50B3	500	98	40.00	±20	3.50	0.10	TO-264	Circuit 2/N CH
SMOS44N80S	800	44	165.00	±20	2.00	0.18	SOT-227	Circuit 3/N CH
SMOS4N90A1	900	4	2600.00	±20	3.00	2.66	TO-220F	Circuit 2/N CH
SMOS4N90A2	900	4	2600.00	±20	3.00	0.89	TO-220AB	Circuit 2/N CH
SMOS6N90A1	900	6	2400.00	±20	4.00	2.55	TO-220F	Circuit 2/N CH
SMOS6N90A2	900	6	2400.00	±20	4.00	0.70	TO-220AB	Circuit 2/N CH
SMOS38N100S	1000	38	250.00	±20	2.00	0.14	SOT-227	Circuit 3/N CH
SMOS3N150B2	1500	3	5000.00	±20	4.00	0.54	TO-247AD	Circuit 2/N CH
超级结场效应晶体管Super Junction MOSFET(CoolMOSFET)								
SJM24N80A2	800	24	145	±20	3.00	0.98	TO-220AB	Circuit 2/N CH
SJM24N80B2	800	24	145	±20	3.00	0.25	TO-247AD	Circuit 2/N CH
SJM48N80B3	800	48	76	±20	3.00	0.23	TO-264	Circuit 2/N CH
SJM48N80S	800	48	76	±20	3.00	0.28	SOT-227	Circuit 3/N CH

外形图 Outlines

SOT-23-3L

TO-220F

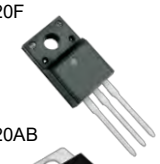

TO-220AB

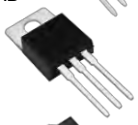

TO-263

TO-251

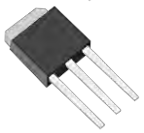

TO-252

TO-247AD

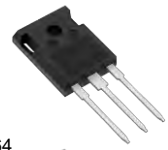

TO-264

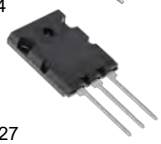

SOT-227

内部电路图 Circuit 及沟道极性 Configuration

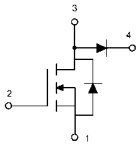

Circuit5
Boost Chopper
N Channel for SOT-227

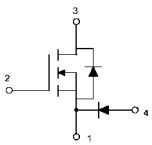

Buck Chopper
N Channel for SOT-227

内部电路图 Circuit 及沟道极性 Configuration

Circuit1
P Channel

Circuit2
N Channel

Circuit 3
N Channel for SOT-227

超快恢复二极管
Ultra Fast Recovery Diodes Tj = - 40°C ~ +125°C, Tjm = +125°C

型号 TYPE	电气特性Electrical Characteristics								封装外形 Package Style	内部电路 Circuits	外形图 Outlines
	V_{RRM}	I_{FAV}	I_{FSM}	I_R at V_R=V_{RRM}		V_{Fmax} at I_F		trr (max)			
				25°C	125°C						
	V	A	A	μA	mA	V	A	ns			
MUR820	200	8	100	2	1	1	8	30	TO-220AC	1	TO-220AC
MUR860	600	8	100	2	2	2	8	50	TO-220AC	1	
MUR860F	600	8	100	2	2	2	8	50	TO-220F-2L	1	
MUR860S	600	8	100	2	2	2	8	50	TO-263	1	
MUR1020CT	200	10	100	2	1	1	5	30	TO-220AB	2	TO-220F-2L
MUR1040	400	10	100	3	1	1	10	35	TO-220AC	1	
MUR1060CT	600	10	100	3	1	2	5	50	TO-220AB	2	
MUR1060CTF	600	10	100	3	1	2	5	50	TO-220F-3L	2	
MUR1520	200	15	100	5	3	1	15	30	TO-220AC	1	
MUR1540	400	15	100	5	3	1	15	35	TO-220AC	1	TO-220AB
MUR1560	600	15	100	5	3	2	15	50	TO-220AC	1	
MUR1560F	600	15	100	5	3	2	15	50	TO-220F-2L	1	
MUR1560S	600	15	100	5	3	2	15	50	TO-263	1	
MUR1620CT	200	16	150	5	10	1	8	30	TO-220AB	2	TO-220F-3L
MUR1620AT	200	16	150	5	10	1	8	30	TO-220AB	3	
MUR1640CT	400	16	140	5	10	1	8	35	TO-220AB	2	
MUR1640AT	400	16	140	5	10	1	8	35	TO-220AB	3	
MUR1640DT	400	15	140	5	10	1	8	35	TO-220AB	4	
MUR1660CT	600	16	125	5	10	2	8	50	TO-220AB	2	TO-263
MUR1660AT	600	16	125	5	10	2	8	50	TO-220AB	3	
MUR1660DT	600	16	125	5	10	2	8	50	TO-220AB	4	
MUR2020CT	200	20	160	10	10	1	10	30	TO-220AB	2	
MUR2020AT	200	20	160	10	10	1	10	30	TO-220AB	3	TO-247AC
MUR2020DT	200	20	160	10	10	1	10	30	TO-220AB	4	
MUR2040CT	400	20	150	20	10	1	10	35	TO-220AB	2	
MUR2040AT	400	20	150	20	10	1	10	35	TO-220AB	3	
MUR2040DT	400	20	150	20	10	1	10	35	TO-220AB	4	
MUR2060CT	600	20	110	50	1	2	10	50	TO-220AB	2	TO-247AD
MUR2060AT	600	20	110	50	1	2	10	50	TO-220AB	3	
MUR2060DT	600	20	110	50	1	2	10	50	TO-220AB	4	
MUR2960	600	30	250	100	7	2	30	50	TO-220AC	1	
MUR2960F	600	30	250	100	7	2	30	50	TO-220F-2L	1	
MUR2960S	600	29	250	100	7	2	30	50	TO-263	1	内部电路Circuits
MUR3020CT	200	30	250	5	1	1	15	35	TO-220AB	2	
MUR3020	200	30	300	250	1	1	30	35	TO-247AC	1	
MUR3020PT	200	30	150	50	3	1	15	35	TO-247AD	2	MUR****
MUR3030	300	30	300	100	1	1	30	35	TO-247AC	1	Circuit 1
MUR3030PT	300	30	150	50	3	1	15	35	TO-247AD	2	
MUR3040	400	30	300	100	7	2	30	50	TO-247AC	1	
MUR3040PT	400	30	150	50	3	2	15	50	TO-247AD	2	
MUR3060	600	30	300	100	7	2	30	50	TO-247AC	1	MUR****CT(PT)
MUR3060PT	600	30	150	50	3	2	15	50	TO-247AD	2	Circuit 2
MUR6020	200	60	600	50	11	1	60	35	TO-247AC	1	
MUR6020PT	200	60	325	200	5	1	30	50	TO-247AD	2	
MUR6030	300	60	550	200	14	1	60	35	TO-247AC	1	
MUR6030PT	300	60	325	200	5	1	30	50	TO-247AD	2	MUR****AT
MUR6040	400	60	550	500	14	2	60	50	TO-247AC	1	Circuit 3
MUR6040PT	400	60	300	100	7	2	30	50	TO-247AD	2	
MUR6060	600	60	550	200	14	2	60	50	TO-247AC	1	
MUR6060PT	600	60	300	100	7	2	30	50	TO-247AD	2	MUR****DT
MUR12060	600	120	600	3mA	20	2	120	75	TO-247AC	1	Circuit 4

软恢复特性高性能高结温超快恢复外延二极管

Soft Recovery Behaviour High-Performance Wide Temperature Range Ultra Fast Recovery Epitaxial Diodes

Tj = -55°C ~ +175°C, Tjm = +175°C

型号 TYPE	电气特性Electrical Characteristics								封装外形 Package Style	内部电路 Circuits	外形图 Outlines
	V_{RRM}	I_{FAV}	I_{FSM}	I_{RRM} at V_R=V_{RRM}		V_{Fmax} at I_{FM}		trr (typ)			
				25°C	125°C						
	V	A	A	μA	mA	V	A	ns			
HUR820	200	8	96	10	0.1	1.000	8	25	TO-220AC	1	
HUR1020	200	10	150	10	0.1	1.000	10	25	TO-220AC	1	
HUR1520	200	15	220	10	0.1	1.000	15	25	TO-220AC	1	
HUR1520F	200	15	220	10	0.1	1.000	15	25	TO-220F-2L	1	
HUR2020	200	20	250	20	0.2	1.000	20	25	TO-220AC	1	
HUR2520	200	25	300	20	0.2	1.000	25	25	TO-220AC	1	
HUR3020	200	30	360	30	0.3	1.000	30	25	TO-247AC	1	
HUR4020	200	40	480	30	0.3	1.000	40	25	TO-247AC	1	
HUR5020	200	50	600	50	0.5	1.000	50	25	TO-247AC	1	
HUR6020	200	60	720	50	0.5	1.000	60	25	TO-247AC	1	
HUR2020CTA1	200	2X10	150	10	0.1	1.000	10	25	TO-220F-3L	2	
HUR2020CTA2	200	2X10	150	10	0.1	1.000	10	25	TO-220AB	2	
D20LC20UB4	200	2X10	150	10	0.1	1.000	10	25	TO-3PF	2	
D20LC20UA6	200	2X10	150	10	0.1	1.000	10	25	TO-263	2	
HUR3020PT	200	2X15	220	20	0.2	1.000	15	25	TO-247AD	2	
HUR4020PT	200	2X20	250	20	0.2	1.000	20	25	TO-247AD	2	
HUR5020PT	200	2X25	300	20	0.2	1.000	25	25	TO-247AD	2	
HUR6020PT	200	2X30	360	30	0.3	1.000	30	25	TO-247AD	2	
HUR7020PT	200	2X35	400	30	0.3	1.000	35	25	TO-247AD	2	
HUR8020PT	200	2X40	480	30	0.3	1.000	40	25	TO-247AD	2	
HUR1040	400	10	105	10	0.1	1.300	10	35	TO-220AC	1	
HUR1540	400	15	160	10	0.1	1.300	15	35	TO-220AC	1	
HUR2040	400	20	210	20	0.2	1.300	20	35	TO-220AC	1	
HUR3040	400	30	320	30	0.3	1.300	30	35	TO-247AC	1	
HUR4040	400	40	420	30	0.3	1.300	40	35	TO-247AC	1	
HUR6040	400	60	630	50	0.5	1.300	60	35	TO-247AC	1	
HUR8040	400	80	840	60	0.6	1.300	80	35	TO-247AC	1	
HUR10040	400	100	950	70	0.7	1.300	100	35	TO-247AC	1	
HUR2040CTA1	400	2X10	105	10	0.1	1.300	10	35	TO-220F-3L	2	
HUR2040CTA2	400	2X10	105	10	0.1	1.300	10	35	TO-220AB	2	
HUR3040PT	400	2X15	160	10	0.1	1.300	15	35	TO-247AD	2	
HUR4040PT	400	2X20	210	20	0.2	1.300	20	35	TO-247AD	2	
HUR6040PT	400	2X30	320	30	0.3	1.300	30	35	TO-247AD	2	
HUR8040PT	400	2X40	420	30	0.3	1.300	40	35	TO-247AD	2	
HUR12040PT	400	2X60	630	50	0.5	1.300	60	35	TO-264	2	
HUR1560	600	15	140	10	0.1	1.550	15	40	TO-220AC	1	
HUR1560F	600	15	140	10	0.1	1.550	15	40	TO-220F-2L	1	
HUR2060	600	20	190	20	0.2	1.550	20	40	TO-220AC	1	
HUR3060	600	30	285	30	0.3	1.550	30	40	TO-247AC	1	
HUR4060	600	40	380	30	0.3	1.550	40	40	TO-247AC	1	
HUR6060	600	60	570	50	0.5	1.550	60	40	TO-247AC	1	
HUR7560	600	75	710	60	0.6	1.550	75	40	TO-247AC	1	
HUR10060	600	100	950	70	0.7	1.550	100	40	TO-247AC	1	
HUR12060	600	120	1140	80	0.8	1.550	120	40	TO-247AC	1	
HUR15060	600	150	1425	100	1	1.550	150	40	TO-247AC	1	
HUR2060CTA1	600	2X10	95	10	0.1	1.550	10	40	TO-220F-3L	2	
HUR2060CTA2	600	2X10	95	10	0.1	1.550	10	40	TO-220AB	2	
HUR3060PT	600	2X15	140	10	0.1	1.550	15	40	TO-247AD	2	
HUR4060PT	600	2X20	190	20	0.2	1.550	20	40	TO-247AD	2	
HUR6060PT	600	2X30	285	30	0.3	1.550	30	40	TO-247AD	2	
HUR8060PT	600	2X40	380	30	0.3	1.550	40	40	TO-247AD	2	
HUR12060PT	600	2X60	570	50	0.5	1.550	60	40	TO-264	2	
HUR10080B21	800	100	950	70	0.7	1.550	100	60	TO-247AC	1	
HUR15080B51	800	150	1350	70	0.7	1.550	150	60	TO-247P-2L	1	
HUR20080B51	800	200	1800	70	0.7	1.550	200	60	TO-247P-2L	1	
HUR15120	1200	15	120	10	0.1	2.000	15	50	TO-220AC	1	
HUR15120F	1200	15	120	10	0.1	2.000	15	50	TO-220F-2L	1	
HUR20120	1200	20	160	20	0.2	2.000	20	50	TO-220AC	1	
HUR20120F	1200	20	160	20	0.2	2.000	20	50	TO-220F-2L	1	
HUR30120	1200	30	240	30	0.3	2.000	30	50	TO-247AC	1	
HUR40120	1200	40	320	30	0.3	2.000	40	50	TO-247AC	1	
HUR606120	1200	60	480	50	0.5	2.000	60	50	TO-247AC	1	
HUR75120	1200	75	600	60	0.6	2.000	75	50	TO-247AC	1	
HUR100120	1200	100	800	70	0.7	2.000	100	50	TO-247AC	1	
HUR120120	1200	120	960	80	0.8	2.000	120	50	TO-247AC	1	
HUR150120	1200	150	1200	100	1	2.000	150	50	TO-247AC	1	

TO-220AC

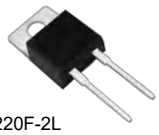

TO-220F-2L

TO-247AC

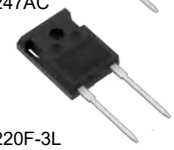

TO-220F-3L

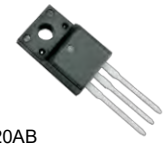

TO-220AB

3PF

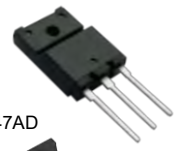

TO-247AD

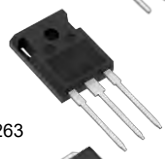

TO-263

TO-247AC

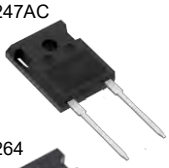

TO-264

TO-247P-2L

内部电路Circuit

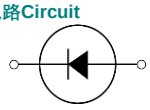

Circuit 1

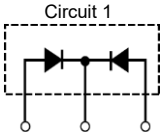

Circuit 2

型号 TYPE	电气特性Electrical Characteristics								封装外形 Package Style	内部电路 Circuits	外形图 Outlines
	V_{RRM}	I_{FAV}	I_{FSM}	I_{RRM} at $V_R=V_{RRM}$		V_{Fmax} at I_{FM}		trr (typ)			
				25°C	125°C						
	V	A	A	μA	mA	V	A	ns			
HUR20120CTA1	1200	2X10	80	10	0.1	2.000	10	50	TO-220F-3L	2	TO-247AD
HUR20120CTA2	1200	2X10	80	10	0.1	2.000	10	50	TO-220AB	2	
HUR30120PT	1200	2X15	120	10	0.1	2.000	15	50	TO-247AD	2	
HUR40120PT	1200	2X20	160	20	0.2	2.000	20	50	TO-247AD	2	
HUR60120PT	1200	2X30	240	30	0.3	2.000	30	50	TO-247AD	2	
HUR80120PT	1200	2X40	320	30	0.3	2.000	40	50	TO-247AD	2	TO-264
HUR120120PT	1200	2X60	480	50	0.5	2.000	60	50	TO-264	2	
HUR150120PT	1200	2X75	600	60	0.6	2.000	75	50	TO-264	2	
HUR2×30-20	200	2×30	360	250	1	1.10	30	25	SOT-227	3	
HUR2×30-30	300	2×30	300	250	1	1.15	30	30	SOT-227	3	
HUR2×30-40	400	2×30	300	250	1	1.30	30	35	SOT-227	3	
HUR2×30-60	600	2×30	250	250	1	1.55	30	40	SOT-227	3	SOT-227
HUR2×30-120	1200	2×30	200	250	1	2.00	30	50	SOT-227	3	
HUR2×60-20	200	2×60	600	650	2.5	1.10	60	25	SOT-227	3	
HUR2×60-30	300	2×60	600	650	2.5	1.15	60	30	SOT-227	3	
HUR2×60-40	400	2×60	600	650	2.5	1.30	60	35	SOT-227	3	
HUR2×60-60	600	2×60	600	650	2.5	1.55	60	40	SOT-227	3	内部电路Circuit
HUR2×60-120	1200	2×60	500	1000	4	2.00	60	50	SOT-227	3	
HUR2×100-40	400	2×100	1000	1000	4	1.45	100	35	SOT-227	3	
HUR2×100-60	600	2×100	1000	1000	4	1.54	100	40	SOT-227	3	
HUR2×100-80	800	2×100	1000	1000	4	1.55	100	60	SOT-227	3	
HUR2×100-120	1200	2×100	950	1000	5	2.00	100	50	SOT-227	3	Circuit 2
HUR2×120-20	200	2×120	1100	1000	4	1.15	100	30	SOT-227	3	
HUR2×120-40	400	2×120	1050	1000	4	1.35	100	35	SOT-227	3	
HUR2×140-20	200	2×140	1000	1000	4	1.15	100	30	SOT-227	3	
HUR2×140-40	400	2×140	1000	1000	4	1.50	100	35	SOT-227	3	
HUR2×150-60	600	2×150	1500	1000	4	1.54	150	45	SOT-227	3	Circuit 3

软恢复特性超快恢复外延二极管模块

Soft Recovery Behaviour Ultra Fast Recovery Epitaxial Diode Modules

Tj = -40°C ~ +125°C, Tjm = +125°C

E310749

型号 TYPE	电气特性Electrical Characteristics								封装外形 Package Style	内部电路 Circuits	外形图 Outlines
	V_{RRM}	I_{FAV}	I_{FSM}	I_{RRM} at $V_R=V_{RRM}$		V_{Fmax} at I_{FM}		trr (typ)			
				25°C	125°C						
	V	A	A	μA	mA	V	A	ns			
S1PDBF26N06E1	600	26	110	100	0.50	1.60	15	35	E1	4	E1
S1PDBF55N12E1	1200	55	200	250	1.00	2.00	30	50	E1	4	
S1PDBF100N12E2	1200	100	500	1000	2.50	2.00	50	50	E2	5	
S3PDBF56N06E1	600	56	110	100	0.50	1.60	20	35	E1	4	
S3PDBF75N12E1	1200	75	200	250	1.00	2.00	30	50	E1	4	
SDKF2X60-17B1	1700	2X60	1000	400	4.00	2.50	60	150	Fig.2	6	
SDKF2X60-17B2	1700	2X60	1000	400	4.00	2.50	60	150	Fig.2	7	
SDAF2X60-17B1	1700	2X60	1000	400	4.00	2.50	60	150	Fig.2	8	
SDAF2X60-17B2	1700	2X60	1000	400	4.00	2.50	60	150	Fig.2	9	E2
SDEF2X60-17B1	1700	2X60	1000	400	4.00	2.50	60	150	Fig.2	10	
SDEF2X60-17B2	1700	2X60	1000	400	4.00	2.50	60	150	Fig.2	11	
SDFF2X60-17B1	1700	2X60	1000	400	4.00	2.50	60	150	Fig.2	12	
SDFF2X60-17B2	1700	2X60	1000	400	4.00	2.50	60	150	Fig.2	13	
SDKF2×75-12B1	1200	2×75	1200	500	10.00	2.17	75	60	Fig.2	6	
SDKF2×75-12B2	1200	2×75	1200	500	10.00	2.17	75	60	Fig.2	7	
SDAF2×75-12B1	1200	2×75	1200	500	10.00	2.17	75	60	Fig.2	8	
SDAF2×75-12B2	1200	2×75	1200	500	10.00	2.17	75	60	Fig.2	9	
SDEF2×75-12B1	1200	2×75	1200	500	10.00	2.17	75	60	Fig.2	10	Fig.2
SDEF2×75-12B2	1200	2×75	1200	500	10.00	2.17	75	60	Fig.2	11	
SDFF2×75-12B1	1200	2×75	1200	500	10.00	2.17	75	60	Fig.2	12	
SDFF2×75-12B2	1200	2×75	1200	500	10.00	2.17	75	60	Fig.2	13	
SDKF2×100-04B1	400	2×100	2000	500	10.00	1.30	100	50	Fig.2	6	
SDKF2×100-04B2	400	2×100	2000	500	10.00	1.30	100	50	Fig.2	7	
SDAF2×100-04B1	400	2×100	2000	500	10.00	1.30	100	50	Fig.2	8	
SDAF2×100-04B2	400	2×100	2000	500	10.00	1.30	100	50	Fig.2	9	
SDEF2×100-04B1	400	2×100	2000	500	10.00	1.30	100	50	Fig.2	10	内部电路Circuit
SDEF2×100-04B2	400	2×100	2000	500	10.00	1.30	100	50	Fig.2	11	Circuit 4
SDFF2×100-04B1	400	2×100	2000	500	10.00	1.30	100	50	Fig.2	12	
SDFF2×100-04B2	400	2×100	2000	500	10.00	1.30	100	50	Fig.2	13	
SDKF2×100-06B1	600	2×100	2000	500	10.00	1.35	100	50	Fig.2	6	
SDKF2×100-06B2	600	2×100	2000	500	10.00	1.35	100	50	Fig.2	7	
SDAF2×100-06B1	600	2×100	2000	500	10.00	1.35	100	50	Fig.2	8	
SDAF2×100-06B2	600	2×100	2000	500	10.00	1.35	100	50	Fig.2	9	
SDEF2×100-06B1	600	2×100	2000	500	10.00	1.35	100	50	Fig.2	10	

型号 TYPE	电气特性Electrical Characteristics								封装外形 Package Style	内部电路 Circuits
	V_{RRM}	I_{FAV}	I_{FSM}	I_{RRM} at V_R=V_{RRM}		V_{Fmax} at I_{FM}		trr (typ)		
				25°C	125°C					
	V	A	A	μA	mA	V	A	ns		
SDEF2×100-06B2	600	2×100	2000	500	10.00	1.35	100	50	Fig.2	11
SDFF2×100-06B1	600	2×100	2000	500	10.00	1.35	100	50	Fig.2	12
SDFF2×100-06B2	600	2×100	2000	500	10.00	1.35	100	50	Fig.2	13
SDAF2X100-07D5	700	2X100	2000	500	10.00	1.60	100	50	Fig.60	9
SDKF2X100-07D5	700	2X100	2000	500	10.00	1.60	100	50	Fig.60	7
SDKF2×100-12B1	1200	2×100	2500	500	15.00	2.00	100	60	Fig.2	6
SDKF2×100-12B2	1200	2×100	2500	500	15.00	2.00	100	60	Fig.2	7
SDAF2×100-12B1	1200	2×100	2500	500	15.00	2.00	100	60	Fig.2	8
SDAF2×100-12B2	1200	2×100	2500	500	15.00	2.00	100	60	Fig.2	9
SDEF2×100-12B1	1200	2×100	2500	500	15.00	2.00	100	60	Fig.2	10
SDEF2×100-12B2	1200	2×100	2500	500	15.00	2.00	100	60	Fig.2	11
SDFF2×100-12B1	1200	2×100	2500	500	15.00	2.00	100	60	Fig.2	12
SDFF2×100-12B2	1200	2×100	2500	500	15.00	2.00	100	60	Fig.2	13
SDKF2×150-04B1	400	2×150	3040	600	18.00	1.55	150	50	Fig.3	6
SDKF2×150-04B2	400	2×150	3040	600	18.00	1.55	150	50	Fig.3	7
SDAF2×150-04B1	400	2×150	3040	600	18.00	1.55	150	50	Fig.3	8
SDAF2×150-04B2	400	2×150	3040	600	18.00	1.55	150	50	Fig.3	9
SDEF2×150-04B1	400	2×150	3040	600	18.00	1.55	150	50	Fig.3	10
SDEF2×150-04B2	400	2×150	3040	600	18.00	1.55	150	50	Fig.3	11
SDFF2×150-04B1	400	2×150	3040	600	18.00	1.55	150	50	Fig.3	12
SDFF2×150-04B2	400	2×150	3040	600	18.00	1.55	150	50	Fig.3	13
SDKF2×150-06B1	600	2×150	3040	600	18.00	1.55	150	50	Fig.3	6
SDKF2×150-06B2	600	2×150	3040	600	18.00	1.55	150	50	Fig.3	7
SDAF2×150-06B1	600	2×150	3040	600	18.00	1.55	150	50	Fig.3	8
SDAF2×150-06B2	600	2×150	3040	600	18.00	1.55	150	50	Fig.3	9
SDEF2×150-06B1	600	2×150	3040	600	18.00	1.55	150	50	Fig.3	10
SDEF2×150-06B2	600	2×150	3040	600	18.00	1.55	150	50	Fig.3	11
SDFF2×150-06B1	600	2×150	3040	600	18.00	1.55	150	50	Fig.3	12
SDFF2×150-06B2	600	2×150	3040	600	18.00	1.55	150	50	Fig.3	13
SDKF2×200-04B1	400	2×200	3300	600	18.00	1.55	200	50	Fig.3	6
SDKF2×200-04B2	400	2×200	3300	600	18.00	1.55	200	50	Fig.3	7
SDAF2×200-04B1	400	2×200	3300	600	18.00	1.55	200	50	Fig.3	8
SDAF2×200-04B2	400	2×200	3300	600	18.00	1.55	200	50	Fig.3	9
SDEF2×200-04B1	400	2×200	3300	600	18.00	1.55	200	50	Fig.3	10
SDEF2×200-04B2	400	2×200	3300	600	18.00	1.55	200	50	Fig.3	11
SDFF2×200-04B1	400	2×200	3300	600	18.00	1.55	200	50	Fig.3	12
SDFF2×200-04B2	400	2×200	3300	600	18.00	1.55	200	50	Fig.3	13
SDKF2×200-06B1	600	2×200	3300	600	18.00	1.55	200	50	Fig.3	6
SDKF2×200-06B2	600	2×200	3300	600	18.00	1.55	200	50	Fig.3	7
SDAF2×200-06B1	600	2×200	2100	600	18.00	1.55	200	50	Fig.3	8
SDAF2×200-06B2	600	2×200	3300	600	18.00	1.55	200	50	Fig.3	9
SDEF2×200-06B1	600	2×200	3300	600	18.00	1.55	200	50	Fig.3	10
SDEF2×200-06B2	600	2×200	3300	600	18.00	1.55	200	50	Fig.3	11
SDFF2×200-06B1	600	2×200	3300	600	18.00	1.55	200	50	Fig.3	12
SDFF2×200-06B2	600	2×200	3300	600	18.00	1.55	200	50	Fig.3	13
SDKF2×200-12B1	1200	2×200	3300	600	18.00	1.55	200	50	Fig.3	6
SDKF2×200-12B2	1200	2×200	3300	600	18.00	1.55	200	50	Fig.3	7
SDAF2×200-12B1	1200	2×200	3300	600	18.00	1.55	200	50	Fig.3	8
SDAF2×200-12B2	1200	2×200	3300	600	18	1.55	200	50	Fig.3	9
SDEF2×200-12B1	1200	2×200	3300	600	18	1.55	200	50	Fig.3	10
SDEF2×200-12B2	1200	2×200	3300	600	18	1.55	200	50	Fig.3	11
SDFF2×200-12B1	1200	2×200	3300	600	18	1.55	200	50	Fig.3	12
SDFF2×200-12B2	1200	2×200	3300	600	18	1.55	200	50	Fig.3	13
SDEF2X250-12DA	1200	2X250	3800	700	18	2.00	250	50	Fig.34	14
SDKF2×300-06B1	600	2×300	4400	800	20	1.55	300	50	Fig.3	6
SDKF2×300-06B2	600	2×300	4400	800	20	1.55	300	50	Fig.3	7
SDAF2×300-06B1	600	2×300	4400	800	20	1.55	300	50	Fig.3	8
SDAF2×300-06B2	600	2×300	4400	800	20	1.55	300	50	Fig.3	9
SDEF2×300-06B1	600	2×300	4400	800	20	1.55	300	50	Fig.3	10
SDEF2×300-06B2	600	2×300	4400	800	20	1.55	300	50	Fig.3	11
SDFF2×300-06B1	600	2×300	4400	800	20	1.55	300	50	Fig.3	12
SDFF2×300-06B2	600	2×300	4400	800	20	1.55	300	50	Fig.3	13
SDKF2×350-02B1	200	2×350	5400	1000	30	1.20	350	35	Fig.3	6
SDKF2×350-02B2	200	2×350	5400	1000	30	1.20	350	35	Fig.3	7
SDKF2X600-06DA	600	2X600	3500	5000	80	1.38	600	70	Fig.34	7
SDF120-17B	1700	120	2000	6000	80	2.20	120	90	Fig.4	15
SDF200-12B	1200	200	2550	3000	10	1.80	200	50	Fig.4	15
SDF200-17B	1700	200	2200	3200	15	2.20	200	90	Fig.4	15
SDF300-05D4	500	300	4100	500	30	1.10	300	85	Fig.53 **(D4)**	16
SDF300-06D4	600	300	4000	500	30	1.30	300	75	Fig.53 **(D4)**	16

外形图 Outlines

Fig.2

Fig.60 (D5)

Fig.3

Fig.34

内部电路Circuit

Circuit 4

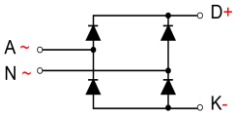

Circuit 5

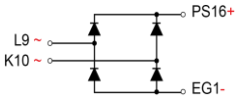

Circuit 6 (SDKF-B1)

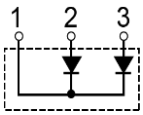

Circuit 7 （SDKF-B2)

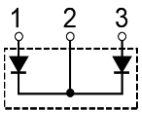

Circuit 8 (SDAF-B1)

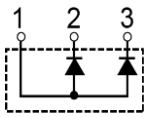

Circuit 9 （SDAF-B2)

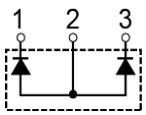

Circuit 10 (SDEF-B1)

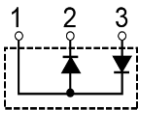

型号 TYPE	电气特性Electrical Characteristics								封装外形 Package Style	内部电路 Circuits	外形图 Outlines
	V_{RRM}	I_{FAV}	I_{FSM}	I_{RRM} at $V_R=V_{RRM}$		V_{Fmax} at I_{FM}		trr (typ)			
				25°C	125°C						
	V	A	A	μA	mA	V	A	ns			
SDF300-07D4	700	300	4000	500	30	1.50	300	75	Fig.53 **(D4)**	16	**Fig.53 (D4)**
SDF450-12	1200	453	4800	2000	50	2.00	450	60	Fig.4	15	
SDF500-06	600	514	5280	1500	50	1.60	500	50	Fig.4	15	
SDF550-02	200	550	5580	1500	50	1.25	550	35	Fig.4	15	
SUR150-02NB	200	150	1800	100	20	1.10	150	35	Fig.42	17	
SUR150-04NB	400	150	1700	100	20	1.30	150	50	Fig.42	17	
SUR150-06NB	600	150	1600	100	20	1.50	150	50	Fig.42	17	**Fig.4**
SUR250-02NB	200	250	2600	150	20	1.10	250	35	Fig.42	17	
SUR250-04NB	400	250	2500	150	20	1.30	250	50	Fig.42	17	
SUR250-06NB	600	250	2400	150	20	1.50	250	50	Fig.42	17	
SUR300-02NB	200	300	3200	200	20	1.10	300	35	Fig.42	17	
SUR300-04NB	400	300	3100	200	20	1.30	300	50	Fig.42	17	**Fig.42**
SUR300-06NB	600	300	3000	200	20	1.50	300	50	Fig.42	17	
SUR400-02NB	200	400	4900	300	20	1.10	400	35	Fig.42	17	
SUR400-04NB	400	400	4800	300	20	1.30	400	40	Fig.42	17	
SUR400-06NB	600	400	4700	300	20	1.50	400	50	Fig.42	17	
SRUD20020CT	200	2x100	1000	50	5	1.10	100	35	Fig.45	18	
SRUD20040CT	400	2x100	900	50	5	1.30	100	40	Fig.45	18	**Fig.45**
SRUD20060CT	600	2x100	800	50	5	1.50	100	50	Fig.45	18	
SRUD20020CTD2	200	2x100	1000	50	5	1.10	100	35	Fig.44 **(D2)**	19	
SRUD20040CTD2	400	2x100	900	50	5	1.30	100	40	Fig.44 **(D2)**	19	
SRUD20060CTD2	600	2x100	800	50	5	1.50	100	50	Fig.44 **(D2)**	19	
SRUD30020CT	200	2x150	1400	100	6	1.10	150	35	Fig.45	18	**Fig.44 (D2)**
SRUD30040CT	400	2x150	1300	100	6	1.30	150	40	Fig.45	18	
SRUD30060CT	600	2x150	1200	100	6	1.50	150	50	Fig.45	18	
SRUD30020CTD3	200	2x150	1400	100	6	1.10	150	35	Fig.52 **(D3)**	19	
SRUD30040CTD3	400	2x150	1300	100	6	1.30	150	40	Fig.52 **(D3)**	19	**Fig.52 (D3)**
SRUD30060CTD3	600	2x150	1200	100	6	1.50	150	50	Fig.52 **(D3)**	19	
SRUD40020CT	200	2x200	1800	200	8	1.10	200	35	Fig.45	18	
SRUD40040CT	400	2x200	1700	200	8	1.30	200	40	Fig.45	18	
SRUD40060CT	600	2x200	1600	200	8	1.50	200	50	Fig.45	18	
SRUD40020CTD3	200	2x200	1800	200	8	1.10	200	35	Fig.52 **(D3)**	19	**Fig.75**
SRUD40040CTD3	400	2x200	1700	200	8	1.30	200	40	Fig.52 **(D3)**	19	
SRUD40060CTD3	600	2x200	1600	200	8	1.50	200	50	Fig.52 **(D3)**	19	
SRUD90060CTD6	600	6X150A	1200	100	6	1.50	150	50	Fig.75	20	

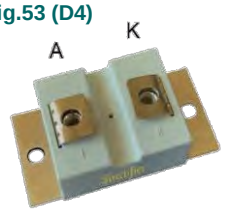

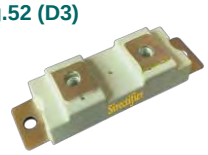

内部电路 Circuits

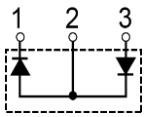

Circuit 11 (SDEF-B2)

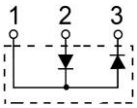

Circuit 12 (SDFF-B1)

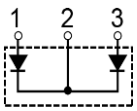

Circuit 13(SDFF-B2)

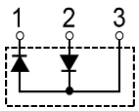

Circuit 14 (SDEF-DA)

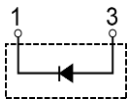

Circuit 15 (SDF-B)

Circuit 16 (SDF-D4)

Circuit 17 (SUR-NB)

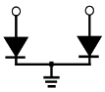

Circuit 18 (SRUD*****CT)

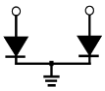

Circuit 19 (SRUD*****CTD2 / D3)

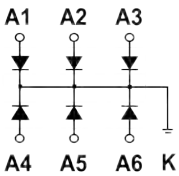

Circuit 20 (SRUD*****CTD6)

功率晶体三极管
Power Transistors

型号 Part Number	电气特性Electrical Characteristics							内部电路 Circuits	封装外形 Package Style	外形图 Outlines
	极性 TYPE	BV_{CBO}	BV_{CEO}	BV_{EBO}	I_C @Tc=90℃	V_{CEsat} @25°C typ.	HFE 25°C typ.			
		V	V	V	A	V				
2SC5171A1	NPN	180	180	5	2.0	0.24	100~320	1	TO-220F	TO-220F
2SC5171A2	NPN	180	180	5	2.0	0.24	100~320	1	TO-220AB	
2SC5171A6	NPN	180	180	5	2.0	0.24	100~320	1	TO-263	
2SA1930A1	PNP	-180	-180	-5	-2.0	-0.24	100~320	2	TO-220F	
2SA1930A2	PNP	-180	-180	-5	-2.0	-0.24	100~320	2	TO-220AB	
2SA1930A6	PNP	-180	-180	-5	-2.0	-0.24	100~320	2	TO-263	
2SA1931A1	PNP	-60	-50	-7	-5.0	-0.20	100~300	2	TO-220F	TO-220AB
2SA1931A2	PNP	-60	-50	-7	-5.0	-0.20	100~300	2	TO-220AB	
2SA1931A6	PNP	-60	-50	-7	-5.0	-0.20	100~300	2	TO-263	
2SD1816A3	NPN	120	100	6	4.0	0.20	70~400	1	TO-251	
2SD1816A4	NPN	120	100	6	4.0	0.20	70~400	1	TO-252	
2SB1216A3	PNP	-120	-100	-6	-4.0	-0.20	70~400	2	TO-251	
2SB1216A4	PNP	-120	-100	-6	-4.0	-0.20	70~400	2	TO-252	TO-263
2SC3518A3	NPN	60	60	7	5.0	0.18	100~400	1	TO-251	
2SC3518A4	NPN	60	60	7	5.0	0.18	100~400	1	TO-252	
2SA1385A3	PNP	-60	-60	-7	-5.0	-0.18	100~400	2	TO-251	
2SA1385A4	PNP	-60	-60	-7	-5.0	-0.18	100~400	2	TO-252	TO-251
KSC2334A2	NPN	150	100	7	7.0	0.60	>40	1	TO-220AB	
MMUN2211LT1	Digital Transistor	50	50	6	0.1	0.25	>35	4	SOT-23-3L	
TIP112A1	NPN Darlington	100	100	5	4.0	2.00	1000~10000	3	TO-220F	
TIP112A2	NPN Darlington	100	100	5	4.0	2.00	1000~10000	3	TO-220AB	TO-252
TIP112A6	NPN Darlington	100	100	5	4.0	2.00	1000~10000	3	TO-263	
TIP122A1	NPN Darlington	100	100	5	5.0	2.00	1000~10000	3	TO-220F	
TIP122A2	NPN Darlington	100	100	5	5.0	2.00	1000~10000	3	TO-220AB	
TIP122A6	NPN Darlington	100	100	5	5.0	2.00	1000~10000	3	TO-263	
TTD1415A1	NPN Darlington	120	100	6	7.0	2.00	2000~15000	3	TO-220F	SOT-23-3L
TIP132A1	NPN Darlington	100	100	5	8.0	2.00	1000~10000	3	TO-220F	
TIP132A2	NPN Darlington	100	100	5	8.0	2.00	1000~10000	3	TO-220AB	
TIP132A6	NPN Darlington	100	100	5	8.0	2.00	1000~10000	3	TO-263	
TIP142B2	NPN Darlington	100	100	6	10.0	2.10	1000~15000	3	TO-247AD	TO-247AD
2SC5196B2	NPN	120	120	6	6.0	1.00	55~160	1	TO-247AD	
2SA1939B2	PNP	-120	-120	-6	-6.0	-1.00	55~160	2	TO-247AD	
2SD718B2	NPN	120	120	6	8.0	1.50	55~160	1	TO-247AD	
2SB688B2	PNP	-120	-120	-6	-8.0	-1.50	55~160	2	TO-247AD	
2SC3320B2	NPN	500	400	7	15.0	0.70	>10	1	TO-247AD	
2SC5200B3	NPN	250	250	5	17.0	0.40	55~160	1	TO-264	TO-264
2SA1943B3	PNP	-250	-250	-5	-17.0	-0.40	55~160	2	TO-264	
MJL4281B3	NPN	350	350	5	15.0	0.70	80~250	1	TO-264	
MJL4302B3	PNP	-350	-350	-5	-15.0	-0.70	80~250	2	TO-264	
MJL21193	PNP	-400	-250	-6	-16	1.4	25~75	2	TO-264	
MJL21194	NPN	400	250	6	16	1.4	25~75	1	TO-264	

内部电路Circuit

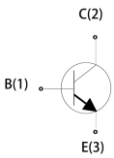

Circuit 1 (NPN)

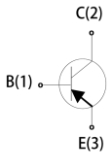

Circuit 2（PNP）

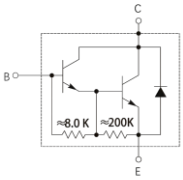

Circuit 3 NPN Darlington

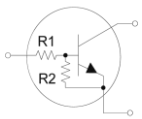

Circuit 4 Digital Transistor

晶闸管-晶闸管模块

Thyristor-Thyristor Modules(Isolated)

型号 TYPE	电气特性Electrical Characteristics										封装外形 Package Style	外形图 Outlines
	IT			V_{DRM}	I_{TSM}	V_{TO}	r_T	dv/dt	T_{VJM}	R_{thJC}		
	I_{TRMS}	I_{TVM}	@T_C	/ V_{RRM}								
	A	A	℃	V	A	V	mΩ	V/μs	℃	K/W		
STT27GK08/18	42	27	85	800-1800	520	0.85	11.00	1000	125	0.440	Fig.31	Fig31
STT27GK08B/18B	42	27	85	800-1800	520	0.85	11.00	1000	125	0.540	Fig.12	
STT49GK08/18	76	49	85	800-1800	1150	0.85	5.30	1000	125	0.265	Fig.31	
STT49GK08B/18B	76	49	85	800-1800	1150	0.85	5.30	1000	125	0.365	Fig.12	
STT60GK08/18	94	60	85	800-1800	1500	0.85	3.70	1000	125	0.225	Fig.31	Fig12
STT60GK08B/18B	94	60	85	800-1800	1500	0.85	3.70	1000	125	0.325	Fig.12	
STT70GK08/24	110	70	85	800-2400	1600	0.85	3.20	1000	125	0.200	Fig.31	
STT70GK08B/24B	110	70	85	800-2400	1600	0.85	3.20	1000	125	0.300	Fig.12	Fig32
STT90GK08/20	140	90	85	800-2000	1700	0.85	2.90	1000	125	0.180	Fig.31	
STT90GK08B/20B	140	90	85	800-2000	1700	0.85	2.90	1000	125	0.280	Fig.12	
STT100GK08/22	157	100	85	800-2200	1700	0.85	2.70	1000	125	0.170	Fig.31	
STT100GK08B/22B	157	100	85	800-2200	1700	0.85	2.70	1000	125	0.270	Fig.12	Fig14
STT115GK22/38BT	180	115	85	2200-3800	2500	1.20	2.30	1000	125	0.099	Fig.35	
STT116GK08/24	180	116	85	800-2400	2250	0.83	2.40	1000	125	0.150	Fig.31	
STT116GK08B/24B	180	116	85	800-2400	2250	0.83	2.40	1000	125	0.250	Fig.12	
STT130GK08/18	204	130	85	800-1800	4750	0.80	1.50	1000	125	0.115	Fig.32	Fig35
STT130GK08B/16B	204	130	85	800-800	4750	0.80	1.50	1000	125	0.230	Fig.14	
STT140GK08/20	220	140	85	800-2000	2400	0.85	2.80	1000	140	0.100	Fig.31	
STT160GK22/36BT	251	160	85	2200-3600	6000	1.20	2.30	1000	125	0.080	Fig.35	
STT165GK08/22	259	165	85	800-2200	6000	0.80	1.60	1000	125	0.078	Fig.32	Fig17
STT165GK08/22B	259	165	85	800-2200	6000	0.80	1.60	1000	125	0.195	Fig.14	
STT181GK08/18	284	181	85	800-1800	6000	0.88	1.15	1000	125	0.070	Fig.32	
STT181GK08/18B	284	181	85	800-1800	6000	0.88	1.15	1000	125	0.185	Fig.14	
STTF180GK08/18BT	350	180	85	800-1800	6700	1.30	0.90	1000	125	0.065	Fig.35	Fig15
STT200GK08/18B	314	200	85	800-1800	7900	0.95	1.05	1000	125	0.152	Fig.14	
STT201GK08/18	314	200	85	800-1800	7900	0.95	1.10	1000	125	0.040	Fig.15	
STT240GK30/42BT	377	240	85	3000-4200	9000	1.56	2.14	1000	140	0.032	Fig.17	
STT250GK08/18	400	250	85	800-1800	8000	0.85	1.00	1000	140	0.035	Fig.15	Fig29
STT253GK08/40BT	400	253	85	800-4000	8500	0.85	1.00	1000	140	0.239	Fig.35	
STT260GK08/18	408	260	85	800-1800	8300	0.81	1.23	1000	125	0.115	Fig.32	
STT320GK08/18	500	320	85	800-1800	9000	0.80	0.82	1000	140	0.033	Fig.15	
STT320GK08/40BT	500	320	85	800-4000	9200	0.80	0.82	1000	140	0.190	Fig.35	
STT500GK08/40BT	785	500	85	800-4000	15000	0.80	0.38	1000	140	0.072	Fig.17	Fig90
STT570GK08/26BT	895	570	85	800-2600	17000	0.80	0.39	1000	140	0.070	Fig.17	
STO630GK08/26BT	990	630	85	800-2600	25000	0.85	0.21	1000	140	0.042	Fig.90	
STO860GK08/22BT	1350	860	85	800-2200	31000	0.90	0.21	1000	140	0.041	Fig.90	
STO800GK08/30PT	1256	800	85	800-3000	30000	0.90	0.21	1000	140	0.041	Fig.29	Fig66
STT800GK08/30PTWC	1256	800	85	80-3000	30000	0.90	0.21	1000	140	0.050	Fig.66	
STT1000GK08/30PT	1570	1000	85	800-3000	37000	0.95	0.30	1000	140	0.035	Fig.29	
STT1000GK14/30PTWC	1570	1000	85	1400-3000	37000	0.95	0.30	1000	140	0.010	Fig.66	

* Suffix " BT " means Pressure Contact Technology with BusBar Terminal
* Suffix " PT " means Pressure Contact Technology with Screw Terminal
* Suffix " PTWC " means Pressure Contact Technology with Screw Terminal and Water Cooling construction

Without Suffix means with DCB Baseplate

Suffix " B " means with Copper Baseplate

STT

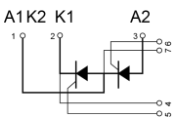

STT***B

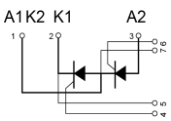

STT***BT

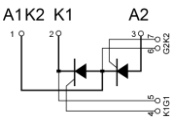

STT**PT

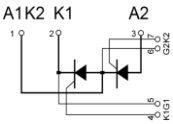

STK***B

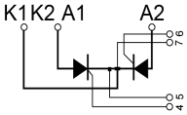

STT**PTWC

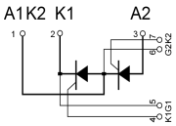

STO***BT

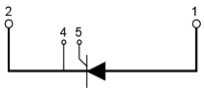

STA

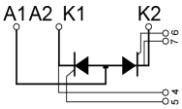

STK

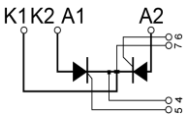

STA***B

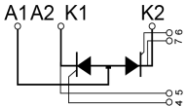

晶闸管(可控硅)分立器件
Thyristor Discretes

E310749

型号 TYPE	电气特性Electrical Characteristics												封装外形 Package Style	外形图 Outlines
	V_{DRM}	I_T		I_{GT}	V_{GT}	I_{DRM}	V_{TM}	I_H	I^2T	I_{TSM}	dv/dt	R_{thJC}		
	V_{RRM}	I_{TRMS}	I_{TVM}			I_{RRM}								
	V	A	A	mA	V	mA	V	mA	A^2S	A	V/μs	°C/W		
STO608/1208SF	600/1200	8	5.0	20~30uA (高灵敏型 Sensitive)	0.80	0.01	1.40	5	50	80	20	4.00	TO-220F 绝缘式（Isolated）	TO-220F 绝缘式（Isolated）
STYN612/1212	600/1200	12	8.0	2~15	0.85	0.01	1.60	30	98	140	200	1.30	TO-220AB 不绝缘（Non-Isolated）	
STYN616/1216	600/1200	16	10.0	2~25	0.85	0.01	1.60	40	180	190	500	1.10	TO-220AB不绝缘式（Non-Isolated）	
STYN625/1225	600/1200	25	16.0	4~40	0.85	0.01	1.60	50	450	220	1000	1.00	TO-220AB 不绝缘式（Non-Isolated）	TO-220AB 不绝缘（Non-Isolated）
STO630/1830F	600/1800	30	19.0	25~50	0.85	0.02	1.50	50	500	250	1000	0.98	TO-220F 绝缘式（Isolated）	
STYN630/1830	600/1800	30	19.0	25~50	0.85	0.02	1.50	50	500	250	1000	0.95	TO-247AD 不绝缘式（Non-Isolated）	TO-247AD 不绝缘式（Non-Isolated） 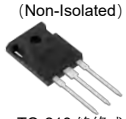
STYN655/2055	600/2000	55	32.0	8~80	0.85	0.10	1.50	100	750	350	1000	0.90	TO-247AD 不绝缘式（Non-Isolated）	
STO855/1855	800/1800	55	32.0	8~80	0.85	0.10	1.50	100	750	350	1000	0.90	TO-218 绝缘式（Isolated）	TO-218 绝缘式（Isolated） 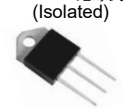
STYN865/2065	800/2000	65	41.0	50~100	0.85	0.50	1.64	100	1060	450	1000	0.75	TO-247AD 不绝缘式（Non-Isolated）	
STO865/2065	800/2000	65	41.0	50~100	0.85	0.50	1.64	100	1060	450	1000	0.75	TO-218 绝缘式（Isolated）	
STYN875/2075	800/2000	75	48.0	50~100	0.85	0.50	1.64	100	2500	550	1000	0.70	TO-247AD 不绝缘式（Non-Isolated）	
STO875/2075	800/2000	75	48.0	50~100	0.85	0.50	1.64	100	2500	550	1000	0.70	TO-218 绝缘式（Isolated）	
STYN8110/2210	800/2200	110	70	50~100	0.85	0.50	1.50	60	5400	800	1000	0.50	TO-247P 不绝缘式（Non-Isolated）	TO-247P 不绝缘式（Non-Isolated）
STYN8140/22140	800/2200	140	90	50~100	0.85	0.50	1.50	100	7500	1000	1000	0.40	TO-247P 不绝缘式（Non-Isolated）	
STYN8150/22150	800/2200	150	95	50~100	0.85	0.50	1.50	100	7500	1000	1000	0.35	TO-264 不绝缘式（Non-Isolated）	
STO50GK08/18S	800/1800	79	50	50~100	0.85	0.50	1.64	100	2740	750	1000	0.72	SOT-227 绝缘式（Isolated）	TO-264 不绝缘式（Non-Isolated） 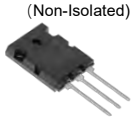
STO75GK08/18S	800/1800	118	75	50~100	0.85	0.50	1.64	100	5700	1100	1000	0.45	SOT-227 绝缘式（Isolated）	
STO100GK08/18S	800/1800	157	100	50~100	0.85	0.50	1.64	100	9800	1400	1000	0.35	SOT-227 绝缘式（Isolated）	
STO150GK08/18S	800/1800	236	150	50~100	0.85	0.50	1.64	100	20000	2000	1000	0.20	SOT-227 绝缘式（Isolated）	SOT-227 绝缘式（Isolated）
STOE50G12B2	1200	78	50	50~100	0.85	0.50	1.35	60	2120	650	1000	0.25	TO-247AD 不绝缘式（Non-Isolated）	
STOE80G12B5	1200	196	125	50~100	0.85	0.50	1.35	60	4050	900	1000	0.20	TO-247P 不绝缘式（Non-Isolated）	
STOE116G12B5	1200	182	116	50~100	0.85	0.50	1.35	60	22000	2250	1000	0.50	TO-247P 不绝缘式（Non-Isolated）	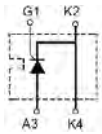

三相半桥式晶闸管模块(电焊机专用)
Three Phase Thyristor Half Bridge Modules (For Welding Machines)

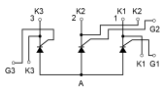

型号 TYPE	电气特性Electrical Characteristics										封装外形 Package Style	外形图 Outlines
	I_T			V_{DRM}	I_{TSM}	V_{TM}	I_{GT}/V_{GT}	dv/dt	T_{VJM}	R_{thJC}		
	I_{TRMS}	I_{TVM} @T_C		/V_{RRM}	50Hz							
	A	A	°C	V	A	V	mA/V	V/μs	°C	°C/W		
3TA60GK03/06NB-A	94	60	85	300-600	1640	1.25	75/1.2	500	150	0.35	Fig.25	Fig.25
3TA60GK03/06NB-B	94	60	85	300-600	1640	1.25	75/1.2	500	150	0.37	Fig.51	
3TA80GK03/06NB-A	125	80	85	300-600	2280	1.20	75/1.2	500	150	0.34	Fig.25	
3TA80GK03/06NB-B	125	80	85	300-600	2280	1.20	75/1.2	500	150	0.36	Fig.51	Fig.51
3TA100GK03/06NB-A	157	100	85	300-600	3200	1.20	75/1.2	500	150	0.30	Fig.25	
3TA100GK03/06NB-B	157	100	85	300-600	3200	1.20	75/1.2	500	150	0.32	Fig.51	
3TA130GK03/06NB-A	204	130	85	300-600	3800	1.20	75/1.2	500	150	0.20	Fig.25	
3TA130GK03/06NB-B	204	130	85	300-600	3800	1.20	75/1.2	500	150	0.22	Fig.51	Fig.19
3TA150GK03/06NB	235	150	85	300-600	4000	1.20	100/1.5	500	150	0.16	Fig.47	
3TA151GK03/06NB	235	150	85	300-600	4000	1.20	100/1.5	500	150	0.15	Fig.19	
3TA200GK03/06NB	314	200	85	300-600	5400	1.20	100/1.5	500	150	0.13	Fig.47	Fig.47
3TA201GK03/06NB	314	200	85	300-600	5400	1.20	100/1.5	500	150	0.12	Fig.19	
3TA250GK03/06NB	392	250	85	300-600	6750	1.20	100/1.5	500	150	0.09	Fig.47	
3TA251GK03/06NB	392	250	85	300-600	6750	1.20	100/1.5	500	150	0.08	Fig.19	

晶闸管-二极管模块
Thyristor-Diode Modules （Isolated）

E310749

型号 TYPE	电气特性Electrical Characteristics										封装外形 Package Style	外形图 Outlines
	IT			V_{DRM}	I_{TSM}	V_{TO}	r_T	dv/dt	T_{VJM}	R_{thJC}		
	I_{TRMS}	I_{TVM}	@T_C	/ V_{RRM}								
	A	A	°C	V	A	V	mΩ	V/μs	°C	K/W		
STD25G08/18P	39	25	85	800-1800	420	0.85	11	1000	125	0.84	Fig.83	Fig.83
STD27GK08/16	42	27	85	800-1800	520	0.85	11.0	1000	125	0.440	Fig.36	
STD27GK08/18B	42	27	85	800-1800	520	0.85	11.0	1000	125	0.540	Fig.18	
STD40G08/18S	62	40	85	800-1800	500	0.85	5.3	1000	125	0.600	Fig.82	
STD49GK08/18	76	49	85	800-1800	1150	0.85	5.3	1000	125	0.265	Fig.36	Fig.36
STD49GK08/18B	76	49	85	800-1800	1150	0.85	5.3	1000	125	0.365	Fig.18	
STD60G08/20S	94	60	85	800-2000	1100	0.78	4.8	1000	125	0.550	Fig.82	
STD60GK08/20	94	60	85	800-2000	1500	0.85	3.7	1000	125	0.225	Fig.36	
STD60GK08/20B	94	60	85	800-2000	1500	0.85	3.7	1000	125	0.325	Fig.18	Fig.18
STD70GK08/24	110	70	85	800-2400	1600	0.85	3.2	1000	125	0.200	Fig.36	
STD70GK08/24B	110	70	85	800-2400	1600	0.85	3.2	1000	125	0.300	Fig.18	
STD80G08/20S	125	80	85	800-2000	1070	0.85	5.5	1000	125	0.450	Fig.82	Fig.82
STD90GK08/20	140	90	85	800-2000	1700	0.85	3.2	1000	125	0.180	Fig.36	
STD90GK08/20B	140	90	85	800-2000	1700	0.85	3.2	1000	125	0.280	Fig.18	
STD100G12/18S	157	100	85	1200-1800	1500	0.85	3.7	1000	125	0.350	Fig.18	
STD100GK08/22	157	100	85	800-2200	1700	0.85	3.2	1000	125	0.170	Fig.36	Fig.37
STD100GK08/22B	157	100	85	800-2200	1700	0.85	3.2	1000	125	0.270	Fig.18	
STD116GK08/24	180	116	85	800-2400	2250	0.80	2.4	1000	125	0.150	Fig.36	
STD116GK08/24B	180	116	85	800-2400	2250	0.80	2.4	1000	125	0.250	Fig.18	
STD130GK08/18	204	130	85	800-1800	5500	0.80	1.5	1000	125	0.115	Fig.37	Fig.20
STD130GK08/18B	204	130	85	800-1800	5500	0.80	1.5	1000	125	0.230	Fig.20	
STD140GK08/18	220	140	85	800-1800	2400	0.80	1.5	1000	140	0.100	Fig.36	
STD165GK08/22	259	165	85	800-2200	6000	0.80	1.6	1000	125	0.078	Fig.37	
STD165GK08/22B	259	165	85	800-2200	6000	0.80	1.6	1000	125	0.195	Fig.20	Fig.21
STD181GK08/22	284	181	85	800-2200	6000	0.88	1.15	1000	125	0.070	Fig.37	
STD181GK08/22B	284	181	85	800-2200	6000	0.88	1.15	1000	125	0.185	Fig.20	
STD200GK08/18B	314	200	85	800-1800	7900	0.95	1.05	1000	125	0.152	Fig.37	
STD201GK08/18	314	200	85	800-1800	8000	0.95	1.0	1000	125	0.040	Fig.21	Fig.56
STD240GK30/42BT	377	240	85	3000-4200	9000	1.56	2.1	1000	140	0.032	Fig.17	
STD250GK08/18	392	250	85	800-1800	8000	0.85	1.0	1000	140	0.035	Fig.21	
STD253GK08/26BT	400	253	85	800-2600	8500	0.85	1	1000	140	0.239	Fig.56	
STD320GK08/18	500	320	85	800-1800	9000	0.80	0.82	1000	140	0.033	Fig.21	
STD320GK08/18	500	320	85	800-1800	9000	0.80	0.82	1000	140	0.033	Fig.21	Fig.17
STD500GK12/26BT	785	500	85	1200-2600	15000	0.80	0.38	1000	140	0.072	Fig.17	
STD570GK12/26BT	895	570	85	1200-2600	17000	0.80	0.37	1000	140	0.070	Fig.17	
STD800GK12/30PT	1256	800	85	1200-3000	30000	0.90	0.21	1000	140	0.041	Fig.29	
STD800GK12/30PTWC	1256	800	85	1200-3000	30000	0.90	0.21	1000	140	0.050	Fig.66	Fig.29
STD1000GK12/30PT	1570	1000	85	1200-3000	37000	0.95	0.30	1000	140	0.035	Fig.29	
STD1000GK12/30PTWC	1570	1000	85	1200-3000	37000	0.95	0.30	1000	140	0.038	Fig.66	

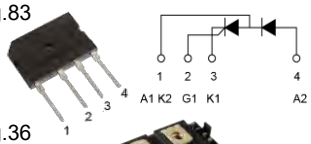

Fig.66

Without Suffix means with DCB Baseplate

Suffix " B " means with Copper Baseplate

Suffix " BT " means Pressure Contact Technology with BusBar Terminal

Suffix " PT " means Pressure Contact Technology with Screw Terminal

Suffix " S " means SOT-227

Suffix " P " means Plastic Flat Full package

Suffix " PTWC " means Pressure Contact Technology with Screw Terminal and Water Cooling construction

STD

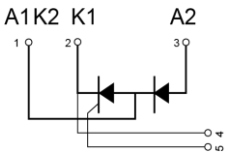

STD**B

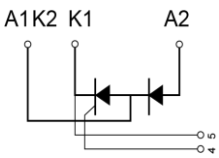

STD**S

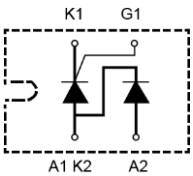

STD**

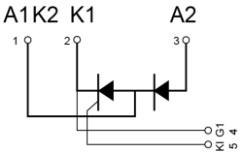

STD250**

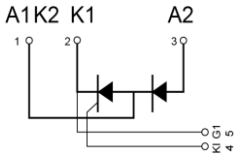

STD**BT

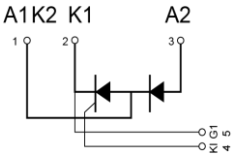

STD**PT

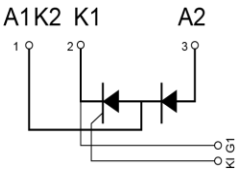

STD**PTWC

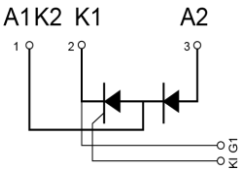

反并联晶闸管模块（固态交流开关）

Anti-Paralled Thyristor-Thyristor Modules (Solid State AC Switches)

E310749

型号 TYPE	电气特性Electrical Characteristics										封装外形 Package Style	外形图 Outlines
	IT			V_{DRM}	I_{TSM}	V_{TO}	r_T	dv/dt	T_{VJM}	R_{thJC}		
	I_{TRMS}	I_{TVM}	@T_C	/ V_{RRM}								
	A	A	℃	V	A	V	mΩ	V/μs	℃	K/W		
SSAC27GK08/18	42	27	85	800-1800	520	0.85	11	1000	125	0.440	Fig.38	
SSAC27GK08/18B	42	27	85	800-1800	520	0.85	11	1000	125	0.540	Fig.23	Fig.38
SSAC49GK08/18	76	49	85	800-1800	1150	0.85	5.3	1000	125	0.265	Fig.38	
SSAC49GK08/18B	76	49	85	800-1800	1150	0.85	5.3	1000	125	0.365	Fig.23	
SSAC60GK08/18	94	60	85	800-1800	1500	0.85	3.7	1000	125	0.225	Fig.38	
SSAC60GK08/18B	94	60	85	800-1800	1500	0.85	3.7	1000	125	0.325	Fig.23	
SSAC62GK08/18S	62	25	85	800-1800	400	0.85	5.5	1000	125	0.455	Fig.82	Fig.23
SSAC70GK08/24	110	70	85	800-2400	1600	0.85	3.2	1000	125	0.200	Fig.38	
SSAC70GK08/24B	110	70	85	800-2400	1600	0.85	3.2	1000	125	0.300	Fig.23	
SSAC74GK08/1800S	74	34	85	800-1800	600	0.85	3.5	1000	125	0.355	Fig.82	
SSAC90GK08/20	140	90	85	800-2000	1700	0.85	3.2	1000	125	0.180	Fig.38	
SSAC90GK08/20B	140	90	85	800-2000	1700	0.85	3.2	1000	125	0.280	Fig.23	
SSAC90GK08/18S	90	41	85	800-1800	1700	0.85	3.2	1000	125	0.300	Fig.82	Fig.82
SSAC100GK08/22	157	100	85	800-2200	1700	0.85	3.2	1000	125	0.170	Fig.38	
SSAC100GK08/22B	157	100	85	800-2200	1700	0.85	3.2	1000	125	0.270	Fig.23	
SSAC116GK08/18	180	116	85	800-1800	2250	0.80	2.4	1000	125	0.150	Fig.38	
SSAC116GK08/18B	180	116	85	800-1800	2250	0.80	2.4	1000	125	0.250	Fig.23	
SSAC130GK08/18B	204	130	85	800-1800	5500	0.80	1.5	1000	125	0.230	Fig.4	
SSAC165GK08/22B	259	165	85	800-2200	6000	0.80	1.6	1000	125	0.195	Fig.4	Fig.4
SSAC181GK08/18B	284	181	85	800-1800	6000	0.88	1.15	1000	125	0.185	Fig.4	
SSAC200GK08/18B	314	200	85	800-1800	7900	0.95	1.05	1000	125	0.152	Fig.4	

Without Suffix means with DCB Baseplate

Suffix " B " means with Copper Baseplate

SSAC**GK

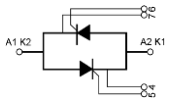

SSAC**GK**B

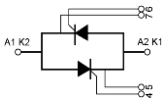

SSAC**GK**S

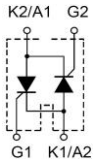

SSAC**B

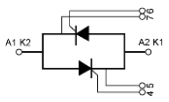

单相桥/三相桥式半/全控模块(带/不带续流二极管)

Single/Three Phase Thyristor Half/Full Bridge Modules With/Without Free Wheeling Diode

E310749

型号 TYPE	电气特性Electrical Characteristics									封装外形 Package Style	内部电路 Circuit	外形图 Outlines
	Id_{AV}		V_{DRM} /V_{RRM}	I_{TSM}	V_{TO}	r_T	dv/dt	T_{VJM}	R_{thJC}			
	A	°C	V	A	V	mΩ	V/μs	°C	K/W			
S1PHB15G08/18	15	85	800-1800	190	1.0	40	1000	125	2.40	Fig.13	1	Fig.13
S1PHB28G08/18	28	85	800-1800	300	0.9	15	1000	125	1.40	Fig.13	1	
S1PHB36G08/18	36	85	800-1800	320	0.85	13	1000	125	1.15	Fig.13	1	
S1PHB40G08/18	40	85	800-1800	360	0.85	12	1000	125	1.00	Fig.13	1	
S1PHB41GK08/18B	41	85	800-1800	430	0.88	13	1000	125	0.98	Fig.59	1	
S1PHB50GK08/18B	50	85	800-1800	540	0.85	11	1000	125	0.90	Fig.59	1	Fig.59
S1PHB55G08/18B	55	85	800-1800	550	0.85	11	1000	125	0.90	Fig.41	1	
S1PHB75GK08/18B	75	85	800-1800	810	0.83	10.5	1000	125	0.85	Fig.59	1	
S3PHBD70G08/18B	70	85	800-1800	550	0.85	11	1000	125	0.90	Fig.41	2	
S3PHBD110G08/18B	110	85	800-1800	1150	0.85	11	1000	125	0.65	Fig.43	2	
S3PHBD180G08/18B	180	85	800-1800	1500	0.85	3.5	1000	125	0.55	Fig.43	2	
S3PHB70G08/18B	70	85	800-1800	550	0.85	11	1000	125	0.90	Fig.41	3	Fig.41
S3PHB110G08/18B	110	85	800-1800	1150	0.85	11	1000	125	0.65	Fig.43	3	
S3PHB180G08/18B	180	85	800-1800	1500	0.85	11	1000	125	0.46	Fig.43	3	
S3PFB70G08/18B	70	85	800-1800	550	0.85	11	1000	125	0.90	Fig.41	4	
S3PFB110G08/18B	110	85	800-1800	1150	0.85	11	1000	125	0.65	Fig.43	4	
S3PFB180G08/18B	180	85	800-1800	1500	0.85	11	1000	125	0.46	Fig.43	4	Fig.43

Suffix " B " means with Copper Baseplate; Without Suffix means with DCB Baseplate;

Circuit 1

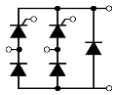

Circuit 2

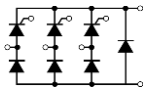

Circuit3

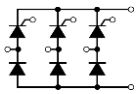

Circuit4

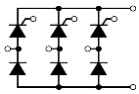

高结温低漏电流肖特基势垒二极管

High Tjm Low IRRM Schottky Barrier Diodes Tj = - 65°C ~ +175°C, Tjm = +175°C

型号 TYPE	电气特性Electrical Characteristics						内部电路 Circuits	封装外形 Package Style
	$V_R=V_{RRM}$	I_{FAV}	I_{FSM}	I_{RRM} at $V_R=V_{RRM}$		V_{Fmax}		
				25°C	125°C			
	V	A	A	mA	mA	V		
MBR5100	100	5	120	0.10	10	0.85	1	TO -220AC
MBR5150	150	5	120	0.10	15	0.95	1	TO -220AC
MBR5200	200	5	120	0.10	15	0.95	1	TO -220AC
MBR860	60	8	150	0.10	15	0.75	1	TO -220AC
MBR8100	100	8	125	0.10	15	0.85	1	TO -220AC
MBR1030	30	10	150	0.10	15	0.60	1	TO -220AC
MBR1035	35	10	150	0.10	15	0.60	1	TO -220AC
MBR1040	40	10	150	0.10	15	0.65	1	TO -220AC
MBR1045	45	10	150	0.10	15	0.65	1	TO -220AC
MBR1050	50	10	150	0.10	25	0.65	1	TO -220AC
MBR1060	60	10	150	0.10	25	0.75	1	TO -220AC
MBR1070	70	10	150	0.10	50	0.75	1	TO -220AC
MBR1080	80	10	150	0.10	50	0.85	1	TO -220AC
MBR1090	90	10	150	0.10	50	0.85	1	TO -220AC
MBR10100	100	10	150	0.20	50	0.85	1	TO -220AC
MBR10150	150	10	150	0.20	50	0.90	1	TO -220AC
MBR10200	200	10	150	0.50	50	0.95	1	TO -220AC
MBR1060CT	60	10	125	0.10	50	0.80	2	TO -220AB
MBR10100CT	100	10	120	0.10	15	0.85	2	TO -220AB
MBR10150CT	150	10	120	0.05	15	0.95	2	TO -220AB
MBR10200CT	200	10	120	0.05	15	0.95	2	TO -220AB
MBR1640CT	40	16	150	0.20	15	0.65	2	TO -220AB
MBR1645CT	45	16	150	0.20	15	0.65	2	TO -220AB
MBR1660CT	60	16	150	1.00	50	0.75	2	TO -220AB
MBR16100CT	100	16	125	0.10	50	0.85	2	TO -220AB
MBR2040CT	40	20	150	0.10	15	0.80	2	TO -220AB
MBR2045CT	45	20	150	0.10	15	0.80	2	TO -220AB
MBR2060CT	60	20	150	0.10	15	0.85	2	TO -220AB
MBR20100CT	100	20	150	0.50	100	0.95	2	TO -220AB
MBR20150CT	150	20	150	1.00	100	0.90	2	TO -220AB
MBR20200CT	200	20	150	1.00	200	0.95	2	TO -220AB
MBR20250CT	250	20	135	1.00	200	0.98	2	TO -220AB
MBR3040CT	40	30	200	0.20	40	0.75	2	TO -220AB
MBR3045CT	45	30	200	0.20	40	0.75	2	TO -220AB
MBR3060CT	60	30	200	1.00	40	0.76	2	TO -220AB
MBR3030PT	30	30	200	1.00	60	0.76	2	TO -247AD
MBR3040PT	40	30	200	1.00	60	0.76	2	TO -247AD
MBR3045PT	45	30	200	1.00	60	0.76	2	TO -247AD
MBR3060PT	60	30	200	1.00	100	0.80	2	TO -247AD
MBR30100PT	100	30	250	1.00	100	0.85	2	TO -247AD
MBR30150PT	150	30	245	1.00	100	0.90	2	TO -247AD
MBR30200PT	200	30	240	1.00	100	0.95	2	TO -247AD
MBR4040PT	40	40	400	1.00	50	0.65	2	TO -247AD
MBR4045PT	45	40	400	1.00	50	0.65	2	TO -247AD
MBR4060PT	60	40	400	1.00	100	0.80	2	TO -247AD
MBR40100PT	100	40	300	1.00	100	0.85	2	TO -247AD
MBR40150PT	150	40	300	1.00	100	0.90	2	TO -247AD
MBR40200PT	200	40	300	1.00	100	0.95	2	TO -247AD
MBR6030PT	30	60	500	1.00	50	0.65	2	TO -247AD
MBR6035PT	35	60	500	1.00	50	0.65	2	TO -247AD
MBR6040PT	40	60	500	1.00	50	0.65	2	TO -247AD
MBR6045PT	45	60	500	1.00	50	0.65	2	TO -247AD
MBR6060PT	60	60	500	1.00	50	0.80	2	TO -247AD
MBR60100PT	100	60	500	1.00	50	0.85	2	TO -247AD
MBR60150PT	150	60	500	1.00	50	0.90	2	TO -247AD
MBR60200PT	200	60	500	1.00	50	0.95	2	TO -247AD
MBR2×40-60	60	2×40	450	1.00	50	0.80	3	SOT-227
MBR2×40-100	100	2×40	450	1.00	50	0.85	3	SOT-227
MBR2×40-150	150	2×40	450	1.00	50	0.90	3	SOT-227
MBR2×40-200	200	2×40	450	1.00	50	0.95	3	SOT-227
MBR2×60-30	30	2×60	800	4.00	50	0.65	3	SOT-227
MBR2×60-40	40	2×60	800	4.00	50	0.65	3	SOT-227
MBR2×60-60	60	2×60	800	4.00	50	0.80	3	SOT-227
MBR2×60-100	100	2×60	700	4.00	100	0.85	3	SOT-227
MBR2×60-150	150	2×60	700	4.00	100	0.90	3	SOT-227
MBR2×60-200	200	2×60	700	4.00	100	0.95	3	SOT-227
MBR2×80-30	30	2×80	900	4.00	200	0.66	3	SOT-227

外形图 Outlines

TO-220AC

TO-220AB

TO-247AD

内部电路图 Circuits

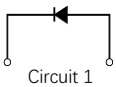

Circuit 1
(TO-220AC)
(TO-247AC)

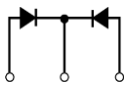

Circuit 2
(TO-220AB)
(TO-247AD)

SOT-227

Circuit3

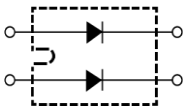

型号 TYPE	电气特性Electrical Characteristics						内部电路 Circuits	封装外形 Package Style	外形图 Outlines
	$V_R=V_{RRM}$	I_{FAV}	I_{FSM}	I_{RRM} at $V_R=V_{RRM}$		V_{Fmax}			
				25°C	125°C				
	V	A	A	mA	mA	V			
MBR2×80-40	40	2×80	900	4.00	200	0.66	3	SOT-227	
MBR2×80-45	45	2×80	900	4.00	200	0.66	3	SOT-227	SOT-227
MBR2×80-60	60	2×80	900	4.00	200	0.80	3	SOT-227	
MBR2×80-100	100	2×80	900	4.00	200	0.85	3	SOT-227	
MBR2×80-150	150	2×80	900	4.00	200	0.90	3	SOT-227	
MBR2×80-200	200	2×80	900	4.00	200	0.95	3	SOT-227	
MBR2×100-60	60	2×100	1200	4.00	200	0.80	3	SOT-227	
MBR2×100-100	100	2×100	1200	4.00	200	0.85	3	SOT-227	
MBR2×100-150	150	2×100	1200	4.00	200	0.90	3	SOT-227	
MBR2×100-200	200	2×100	1200	4.00	200	0.95	3	SOT-227	Circuit 4
MBR2×120-30	30	2×120	1800	4.00	200	0.62	3	SOT-227	
MBR2×120-40	40	2×120	1800	4.00	200	0.65	3	SOT-227	A2
MBR2×120-45	45	2×120	1800	4.00	200	0.65	3	SOT-227	
MBR2×120-60	60	2×120	1800	4.00	200	0.80	3	SOT-227	K
MBR2×120-100	100	2×120	1800	4.00	200	0.85	3	SOT-227	
MBR2×120-150	150	2×120	1800	4.00	200	0.90	3	SOT-227	A1
MBR2×120-200	200	2×120	1800	4.00	200	0.95	3	SOT-227	
MBR2×160-60NB	60	2×160	1600	4.00	200	0.80	4	SOT-227	Fig.42
MBR2×160-100NB	100	2×160	1400	4.00	200	0.85	4	SOT-227	
MBR2×160-150NB	150	2×160	1350	4.00	200	0.90	4	SOT-227	
MBR2×160-200NB	200	2×150	1300	4.00	200	0.95	4	SOT-227	
MBR150-45NB	45	150	1400	2.00	20	0.65	5	Fig.42	
MBR150-60NB	60	150	1400	2.00	20	0.80	5	Fig.42	
MBR150-100NB	100	150	1400	2.00	20	0.85	5	Fig.42	
MBR150-150NB	150	150	1400	2.00	20	0.90	5	Fig.42	Circuit 5
MBR150-200NB	200	150	1400	2.00	20	0.95	5	Fig.42	
MBR250-45NB	45	250	2100	4.00	40	0.65	5	Fig.42	
MBR250-60NB	60	250	2100	4.00	40	0.75	5	Fig.42	
MBR250-100NB	100	250	2100	4.00	40	0.85	5	Fig.42	
MBR250-150NB	150	250	2100	4.00	40	0.85	5	Fig.42	Fig.45
MBR250-200NB	200	250	2100	4.00	40	0.85	5	Fig.42	
MBR300-45NB	45	300	3000	8.00	80	0.65	5	Fig.42	
MBR300-60NB	60	300	3000	8.00	80	0.75	5	Fig.42	
MBR300-100NB	100	300	3000	8.00	80	0.85	5	Fig.42	
MBR300-150NB	150	300	3000	8.00	80	0.85	5	Fig.42	
MBR300-200NB	200	300	3000	8.00	80	0.85	5	Fig.42	Circuit 6
MBR400-45NB	45	400	4500	10.00	120	0.65	5	Fig.42	
MBR400-60NB	60	400	4500	10.00	120	0.75	5	Fig.42	
MBR400-100NB	100	400	4500	10.00	120	0.85	5	Fig.42	
MBR400-200NB	200	400	4500	10.00	120	0.95	5	Fig.42	
SRBD20045CT	45	200	1200	2.00	20	0.65	6	Fig.45	
SRBD20060CT	60	200	1200	2.00	20	0.75	6	Fig.45	Fig.44
SRBD200100CT	100	200	1200	2.00	20	0.85	6	Fig.45	
SRBD200150CT	150	200	1200	2.00	20	0.90	6	Fig.45	
SRBD200200CT	200	200	1200	2.00	20	0.95	6	Fig.45	
SRBD20045CTD2	45	200	1200	2.00	20	0.65	6	Fig.44.	
SRBD20060CTD2	60	200	1200	2.00	20	0.75	6	Fig.44.	
SRBD200100CTD2	100	200	1200	2.00	20	0.85	6	Fig.44.	Circuit 6
SRBD200150CTD2	150	200	1200	2.00	20	0.90	6	Fig.44.	
SRBD200200CTD2	200	200	1200	2.00	20	0.95	6	Fig.44.	
SRBD30045CT	45	300	1800	4.00	40	0.65	6	Fig.45	
SRBD30060CT	60	300	1800	4.00	40	0.75	6	Fig.45	
SRBD300100CT	100	300	1800	4.00	40	0.85	6	Fig.45	
SRBD300150CT	150	300	1800	4.00	40	0.90	6	Fig.45	Fig.52
SRBD300200CT	200	300	1800	4.00	40	0.95	6	Fig.45	
SRBD30045CTD3	45	300	1800	4.00	40	0.65	6	Fig.52	
SRBD30060CTD3	60	300	1800	4.00	40	0.75	6	Fig.52	
SRBD300100CTD3	100	300	1800	4.00	40	0.85	6	Fig.52	
SRBD300150CTD3	150	300	1800	4.00	40	0.90	6	Fig.52	
SRBD300200CTD3	200	300	1800	4.00	40	0.95	6	Fig.52	Circuit 6
SRBD40045CT	45	400	2500	8.00	80	0.65	6	Fig.45	
SRBD40060CT	60	400	2500	8.00	80	0.75	6	Fig.45	
SRBD400100CT	100	400	2500	8.00	80	0.85	6	Fig.45	
SRBD400150CT	150	400	2500	8.00	80	0.90	6	Fig.45	
SRBD400200CT	200	400	2500	8.00	80	0.95	6	Fig.45	
SRBD40045CTD3	45	400	2500	8.00	80	0.65	6	Fig.52	
SRBD40060CTD3	60	400	2500	8.00	80	0.75	6	Fig.52	Suffix " NB " means Non-Isolated Package with Copper Baseplate
SRBD400100CTD3	100	400	2500	8.00	80	0.85	6	Fig.52	
SRBD400150CTD3	150	400	2500	8.00	80	0.90	6	Fig.52	
SRBD400200CTD3	200	400	2500	8.00	80	0.95	6	Fig.52	

整流二极管分立器件 Diode Discretes

Tj = - 40°C ~ +150°C, Tjm = +150°C

型号 TYPE	电气特性Electrical Characteristics								封装外形 Package Style	外形图 Outlines
	IFAVM @Tc=100°C	VR=VRRM	IFRMS	IFSM	VFmax at IFM		RthJC	内部电路 Circuit		
	A	V	A	A	V	A	K/W			
SD1001/1016	10	100-1600	16	150	1.25	10	1.29	1	TO -220AC	TO-220AC
SD2001/2016	20	100-1600	32	250	1.25	20	1.25	1	TO -220AC	
SD2001/2016P	20	100-1600	32	250	1.25	20	1.35	1	TO-220F-2L	
SD3001/3016	30	100-1600	47	300	1.25	30	1.00	1	TO -220AC	
SD4502/4516	45	200-1600	70	475	1.25	45	0.55	1	TO -247AC	TO-220F-2L
SD7004/7018	70	400-1800	110	1500	1.17	70	0.2	1	TO -247AC	
70TD40/180	70	400-1800	110	1500	1.17	70	0.2	1	TO -247AC	
SDD10N01/16	2×10	100-1600	2×16	100	1.25	10	1.25	2	TO - 220AB	
SDD25N02/16	2×25	200-1600	2×40	300	1.25	25	0.45	2	TO -247AD	TO-247AC
SDD45N02/18	2×45	100-1800	2×70	485	1.25	45	0.2	2	TO -247AD	
SDD46N02/18	2×45	200-1800	2×70	490	1.25	46	0.2	2	TO -247P	
SDD80N02/18	2×80	200-1800	2×125	900	1.25	80	0.15	2	TO -247P	
SD150-01NB ~ SD150-16NB	150	100 ~ 1600	235	1500	1.25	150	1.00	3	Fig.42	TO-220AB
SD250-01NB ~ SD250-16NB	250	100 ~ 1600	390	2500	1.25	250	0.80	3	Fig.42	TO-247AD
SD300-01NB ~ SD300-16NB	300	100 ~ 1600	470	3000	1.25	300	0.75	3	Fig.42	
SD400-01NB ~ SD400-16NB	400	100 ~ 1600	620	4000	1.25	400	0.70	3	Fig.42	TO-247P

内部电路 Circuit

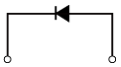

Circuit1

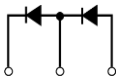

Circuit 2

Circuit3

Fig.42

Suffix "NB" means Non-Isolated with Copper Base

单相整流桥

Single Phase Bridge Rectifiers

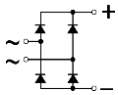

E310749

型号 TYPE	电气特性Electrical Characteristics							封装外形 Package Style	外形图 Outlines
	I_{FAV}	$V_R=V_{RRM}$	I_{FSM}	I_R at $V_R=V_{RRM}$		V_{Fmax} at I_{FM}			
				25°C	125°C				
	A	V	A	μA	μA	V	A		
GBJ1502/1516	15	200-1600	180	10	500	1.05	7.5	Fig.83 **(GBJ)**	Fig.83 (GBJ) Fig.57
GBJ2002/2016	20	200-1600	240	10	600	1.05	10	Fig.83 **(GBJ)**	
GBJ2502/2516	25	200-1600	300	10	800	1.05	12.5	Fig.83 **(GBJ)**	
GBJ3502/3516	35	200-1600	420	15	1000	1.10	17.5	Fig.83 **(GBJ)**	
S1PDB1502/1518	15	200-1800	300	5	500	1.10	7.5	Fig.57	
S1PDB2502/2518	25	200-1500	350	10	800	1.10	12.5	Fig.57	
S1PDB3502/3518	35	200-1800	400	20	1000	1.10	17.5	Fig.57	Fig.27 Fig.82
S1PDB4002/4018	40	200-1800	500	30	1000	1.10	20	Fig.57	
S1PDB5002/5018	50	200-1800	600	40	1000	1.10	25	Fig.57	
S1PDB40N02/18	40	200-1800	500	30	1000	1.10	20	Fig.27	
S1PDB50N02/18	50	200-1800	600	40	1000	1.10	25	Fig.27	
S1PDB40N08/18S	40	800-1800	450	200	4	1.25	60	Fig.82	
S1PDB52N08/18	52	800-1800	520	300	5	1.25	78	Fig.7	Fig.7 Fig.8
S1PDB60N08/18	60	800-1800	600	500	8	1.25	90	Fig.7	
S1PDB72N08/18	72	800-1800	720	800	10	1.25	110	Fig.7	
S1PDB100N08/18	100	800-1800	1000	800	11	1.25	150	Fig.8	
S1PDB122N08/18	122	800-1800	1200	800	12	1.25	180	Fig.8	
S1PDB174N08/18	174	800-1800	1700	1000	15	1.25	260	Fig.8	

三相桥式整流模块
Three Phase Rectifier Module

E310749

型号 TYPE	电气特性Electrical Characteristics								封装外形 Package Style	外形图 Outlines
	I_{DAV} @Tc=100℃	V_{RRM}	I_{FSM}	V_{TO}	r_T	V_{Fmax} at I_{FM} per chip		R_{thJC} per chip		
	A	V	A	A	mΩ	V	A	K/W		
S3PDB12N08/16PA8:J49	12	800-1600	100	0.8	10	1.20	12.0	7.00	Fig.46	Fig.46
S3PDB18N08/16P	18	800-1600	150	0.8	8.5	1.20	18.0	6.90	Fig.46	
S3PDB24N08/16P	24	800-1600	200	0.8	6.1	1.20	24.0	5.80	Fig.46	
S3PDB24N08/16PAV	24	800-1600	200	0.8	6.1	1.20	24.0	5.80	Fig.46	
S3PDB25N08/18	25	800-1800	100	0.8	40	1.20	25.0	2.30	Fig.10	
S3PDB30N08/18	30	800-1800	270	0.8	40	1.20	30.0	0.90	Fig.24	Fig.24
S3PDB3508/18	35 @55℃	800-1800	250	0.8	40	1.20	35.0	3.80	Fig.55	
S3PDB35N08/18	35	800-1800	350	0.8	7.5	1.20	35.0	3.40	Fig.28	
S3PDB36N08/16P	36	800-1600	300	0.8	5.2	1.20	36.0	4.50	Fig.46	
S3PDB4008/18	40 @55℃	800-1800	400	0.8	8	1.20	40.0	8.50	Fig.55	Fig.55
S3PDB40N08/18	40	800-1800	400	0.8	8	1.20	40.0	3.35	Fig.28	
S3PDB42N08/16P	42	800-1600	400	0.8	4.8	1.20	42.0	4.30	Fig.46	
S3PDB5008/18	50 @55℃	800-1800	500	0.8	40	1.20	50.0	8.00	Fig.55	
S3PDB50N12/18	50	1200-1800	460	0.8	8	1.20	50.0	2.85	Fig.28	
S3PDB51N08/18	50	800-1800	460	0.8	8	1.20	50.0	0.24	Fig.9	
S3PDB60N08/18	60	800-1800	550	0.8	8	1.20	60.0	0.24	Fig.9	Fig.9
S3PDB61N08/18	61	800-1800	850	0.8	5	1.25	60.0	0.27	Fig.49	
S3PDB62N08/18	60	800-1800	550	0.8	5	1.25	60.0	0.31	Fig.71	
B6U61A08/18	60	800-1800	550	0.8	5	1.25	60.0	0.31	Fig.71	
S3PDB70N08/18	70	800-1800	590	0.8	6	1.20	70.0	1.30	Fig.24	
S3PDB80N08/18	80	800-1800	750	0.8	5	1.20	80.0	1.10	Fig.9	Fig.49
S3PDB81N08/18	81	800-1800	750	0.8	8	1.20	80.0	1.10	Fig.49	
S3PDB85N08/18	85	800-1800	750	0.8	6	1.20	85.0	1.30	Fig.24	
S3PDB86N08/18	86	800-1800	530	0.8	7.5	1.20	86.0	1.20	Fig.10	
S3PDB91N08/18	91	800-1800	650	0.8	5	1.20	90.0	0.92	Fig.30	Fig.11
S3PDB99N08/1800	100	800-1800	920	0.8	4	1.20	100.0	0.90	Fig.9	
S3PDB100N08/18	100	800-1800	920	0.8	4	1.20	100.0	0.90	Fig.11	
S3PDB101N08/18	100	800-1800	920	0.8	4	1.20	100.0	1.00	Fig.49	
S3PDB104N08/18	100	800-1800	920	0.3	5	1.25	100.0	0.14	Fig.50	Fig.50
B6U104A08/18	100	800-1800	1250	0.3	5	1.25	100.0	0.14	Fig.50	
S3PDB108N08/18E2	117	800-1800	900	0.5	3	1.35	117.0	0.14	Fig.10	
S3PDB130N08/18	130	800-1800	1200	0.8	4	1.20	130.0	0.80	Fig.11	
S3PDB150N08/18	150	800-1800	1500	0.3	8	1.60	150.0	0.14	Fig.73	
S3PDB160N08/18	160	800-1800	1500	0.8	4	1.20	160.0	0.70	Fig.11	Fig.30
S3PDB161N08/18	161	800-1800	1500	0.8	4	1.20	160.0	0.71	Fig.30	
S3PDB180N08/18	180	800-1800	1800	0.8	3	1.20	180.0	0.65	Fig.11	
S3PDB200N08/18	200	800-1800	2240	0.8	2.6	1.20	200.0	0.45	Fig.11	
S3PDB250N08/18	250	800-1800	2800	0.8	2.2	1.20	250.0	0.38	Fig.11	Fig.74
S3PDBT75N08/18	75	800-1800	910	0.8	10	1.20	75.0	0.4	Fig.74	
S3PDBT100N08/18	100	800-1800	1186	0.8	10	1.20	100.0	0.36	Fig.74	
S3PDBT150N08/18	150	800-1800	1460	0.8	10	1.20	150.0	0.18	Fig.75	
S3PDBT200N08/18	200	800-1800	1850	0.8	15	1.15	200.0	0.18	Fig.75	Fig.75

内部电路 Circuit

S3PDB

Ciruit 1

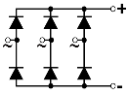

S3PDBT

Circuit 2

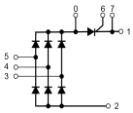

二极管-二极管整流模块
Diode-Diode Modules

E310749

型号 TYPE	电气特性Electrical Characteristics							封装外形 Package Style	外形图 Outlines
	I_{FAVM} @Tc=100℃	$V_R=V_{RRM}$	I_{FRMS}	I_{FSM}	V_{Fmax} at I_{FM}		R_{thJC}		
	A	V	A	A	V	A	K/W		
SDD36N08/18	36	800/1800	56	650	1.38	80	0.50	Fig.33	Fig.33
SDD36N08/18B	36	800/1800	56	650	1.38	80	0.60	Fig.2	
SDD60N08/18	60	800-1800	94	1150	1.60	200	0.295	Fig.33	
SDD60N08/18B	60	800-1800	94	1150	1.60	200	0.395	Fig.2	Fig.2
SDD70N08/18	70	800-1800	110	1400	1.48	200	0.255	Fig.33	
SDD70N08/18B	70	800-1800	110	1400	1.48	200	0.355	Fig.2	
SDD100N08/18	100	800-1800	157	1700	1.60	300	0.175	Fig.33	Fig.34
SDD100N08/18B	100	800-1800	157	1700	1.60	300	0.275	Fig.2	
SDD120N08/18	120	800-1800	188	2800	1.43	300	0.13	Fig.33	
SDD120N08/18B	120	800-1800	188	2800	1.43	300	0.23	Fig.2	
SDD165N08/18	165	800-1800	260	4700	1.30	300	0.105	Fig.34	Fig.3
SDD165N08/18B	165	800-1800	260	4700	1.30	300	0.205	Fig.3	
SDD190N08/18	190	800-1800	300	6600	1.15	300	0.095	Fig.34	
SDD190N08/18B	190	800-1800	300	6600	1.15	300	0.195	Fig.3	Fig.17
SDD253N08/18BT	253	800-1800	400	11000	1.25	750	0.27	Fig.40	
SDD320N08/18BT	320	800-1800	500	11500	1.20	990	0.065	Fig.40	
SDD600N08/18BT	600	800-1800	942	19000	1.45	1800	0.045	Fig.17	
SDD800N08/18PT	800	800-1800	1256	25000	1.45	2400	0.015	Fig.29	Fig.40

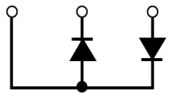
SDD

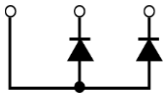
SDA

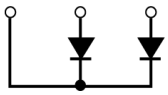
SDK

Fig.29

Suffix"B" means with Copper Baseplate

Suffix"BT" means Pressure Contact Technology with BusBar Terminal

Suffix"PT" means Pressure Contact Technology with Screw Terminal

绝缘式和不绝缘式双向可控硅
Isolated and Non-Isolated Triacs

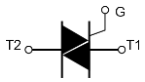

型号 TYPE	电气特性Electrical Characteristics											封装外形 Package Style	外形图 Outlines
	I_{TRMS}	V_{DRM} /V_{RRM}	I_{GT}	V_{GT}	I_{DRM} /I_{RRM}	V_{TM}	I_H	I^2T	I_{TSM}	dv/dt	R_{thJC}		
	A	V	mA	V	mA	V	mA	A^2S	A	V/μs	°C/W		
BTA04-200/1000	4	200-1000	5~10	1.3	0.01	1.55	15	3	25	50	3.7	TO-220AB	TO-220AB TO-218
BTA06-200/1000	6	200-1000	6~25	1.3	0.05	1.55	15	7.8	60	50	2.2	TO-220AB	
BTA08-200/1000	8	200-800	6~25	1.3	0.10	1.55	15	12	80	50	1.8	TO-220AB	
BTA12-200/1000	12	200-1000	6~35	1.3	0.10	1.55	35	55	100	500	1.5	TO-220AB	TO-247AD
BTA16-200/1000	16	200-1000	10~35	1.3	0.10	1.55	35	144	160	500	1.2	TO -220AB	
BTB16-200/1200	15	200-1200	10~50	1.3	0.10	1.55	50	144	160	500	1.20	TO-220AB Non-Isolated	
BTA24-200/1000	24	200-1000	10~50	1.3	0.10	1.55	50	340	250	500	0.8	TO-220AB	Fig.48
BTB24-200/1200	24	200-1200	10~50	1.3	0.10	1.55	75	340	250	500	0.80	TO-220AB Non-Isolated	
BTA26-200/1000	26	200-1000	10~50	1.3	0.10	1.55	50	340	250	500	0.8	TO-218/TOP3	
BTB26-200/1200	26	200-1200	10~50	1.3	0.10	1.55	75	340	250	500	0.80	TO-247AD Non-Isolated	
BTA41-200/1600	41	200-1600	10~50	1.3	0.20	1.55	180	880	400	500	0.6	TO-218/TOP3	Fig.22
BTB41-200/1600	41	200-1600	10~50	1.3	0.20	1.55	180	880	400	500	0.60	TO-247AD Non-Isolated	
SBTA25G04/12B	25	400-1200	10~50	1.3	0.10	1.55	50	340	250	500	1.6	Fig.48	
SBTA35G04/12B	35	400-1200	10~50	1.3	0.10	1.55	120	664	335	500	1.5	Fig.48	Fig.82 SOT-227
SBTA41G04/12B	41	400-1200	10~50	1.3	0.20	1.55	180	880	400	500	1.3	Fig.48	
SBTA70G04/12A	70	400-1200	10~50	1.3	0.2	1.551	100	6000	750	500	1.2	Fig.22	
SBTA100GK06/18S	100	600-1800	10~150	1.3	0.2	1.55	100	22000	2100	500	1.1	Fig.82 SOT-227	
SBTA101GK06/18	100	600-1800	10~150	1.3	0.2	1.55	100	22000	2100	500	0.9	Fig.38	Fig.38

Suffix " A " means with Aluminium Baseplate, Suffix " B " means with Copper Baseplate

Electrical Isolation from Leads to Mounting Tab ⩾ 2500VAC (RMS) 1min

Outline Drawings

Fig. 1 (C1)

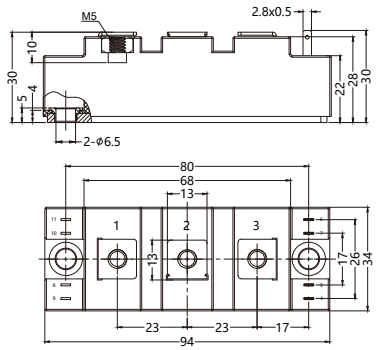

Fig. 2 (AAP)

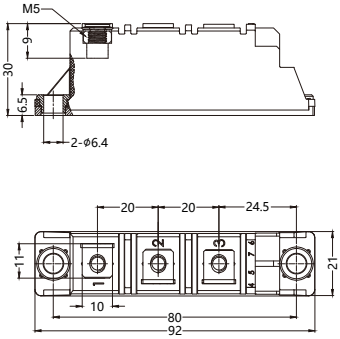

Fig. 3 (IAP)

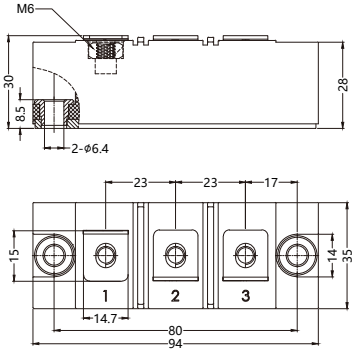

Fig. 4 (IAP)

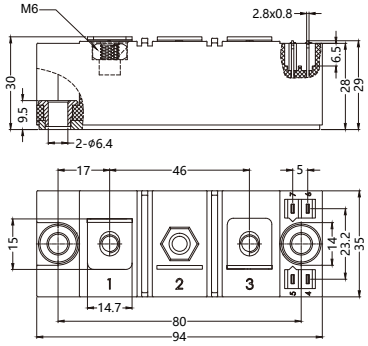

Fig. 5 (C5)

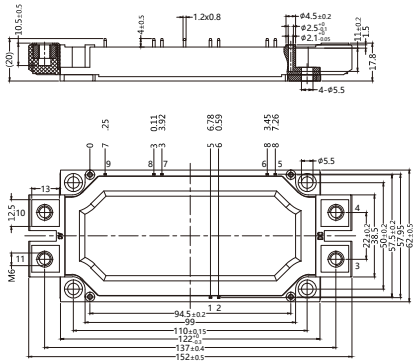

Fig. 6

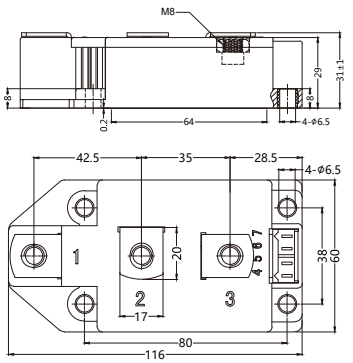

Fig. 7

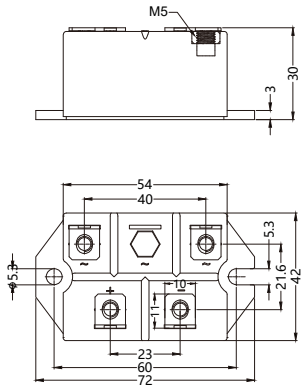

Fig. 8

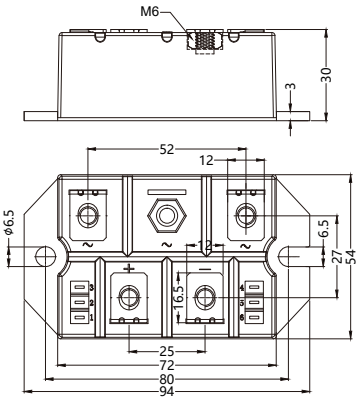

Fig. 9

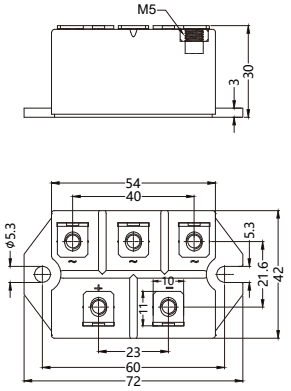

Fig. 10

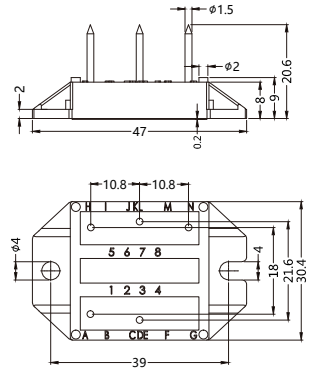

Fig. 11

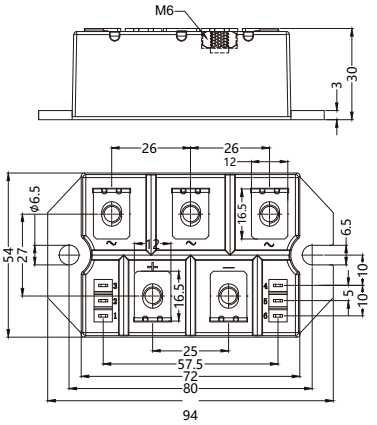

Fig. 12 (AAP)

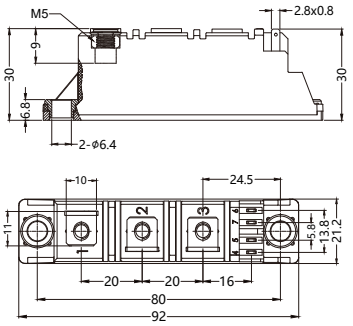

Outline Drawings

Fig. 13

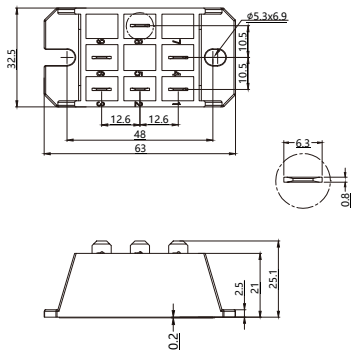

Fig. 14 (IAP)

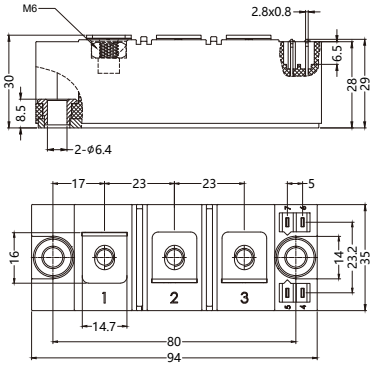

Fig. 15

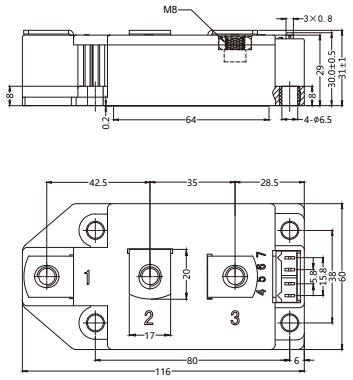

Fig. 16 (C9)

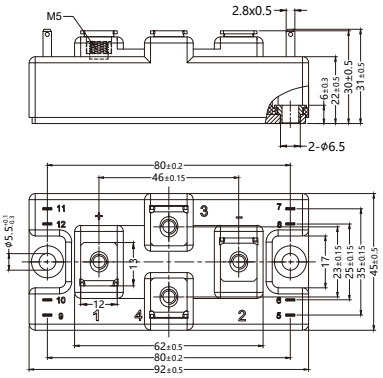

Fig. 17

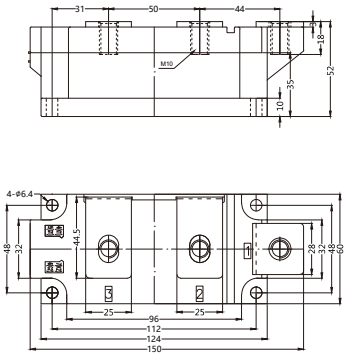

Fig. 18 (AAP)

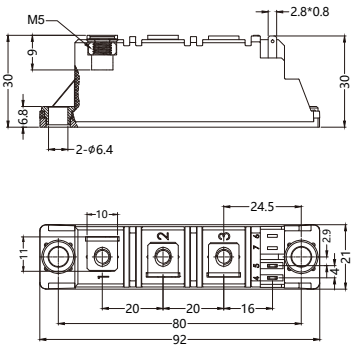

Fig. 19

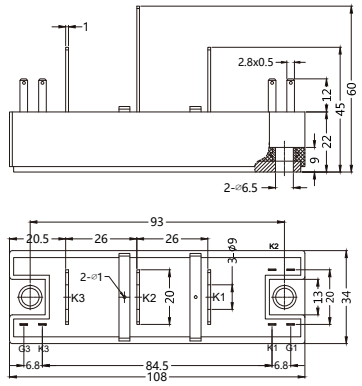

Fig. 20 (IAP)

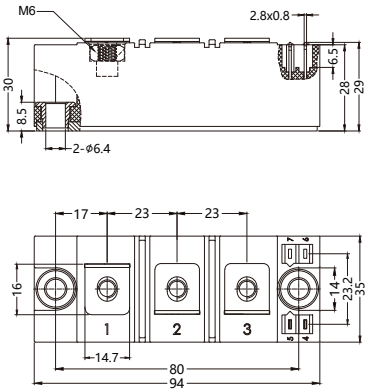

Fig. 21

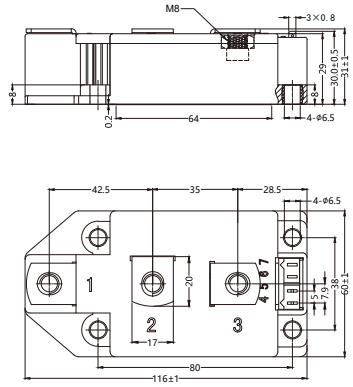

Fig. 22

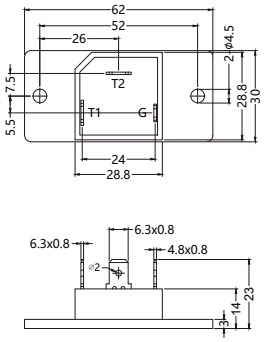

Fig. 23 (AAP)

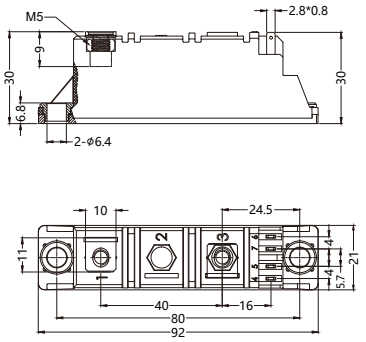

Fig. 24

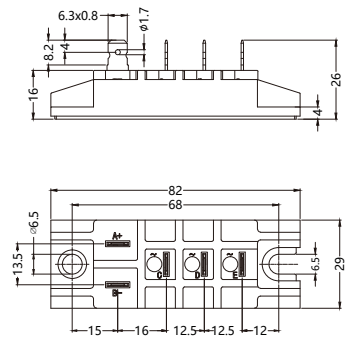

Outline Drawings

Fig. 25

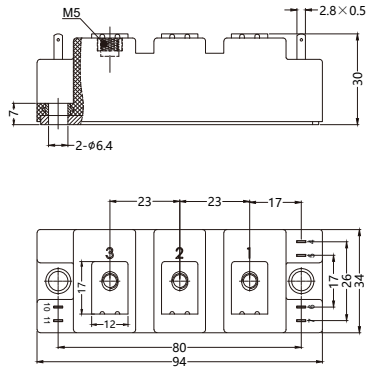

Fig. 26 (C2)

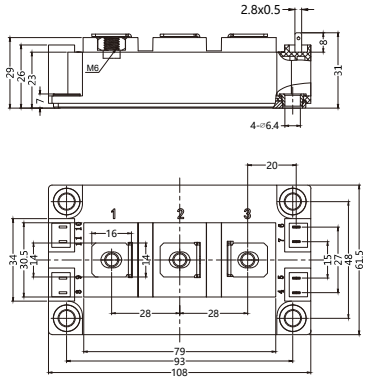

Fig. 27

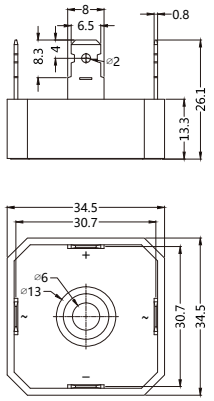

Fig. 28

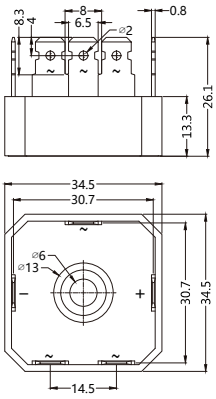

Fig.29

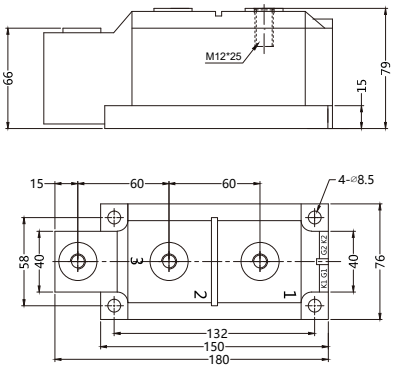

Fig. 30

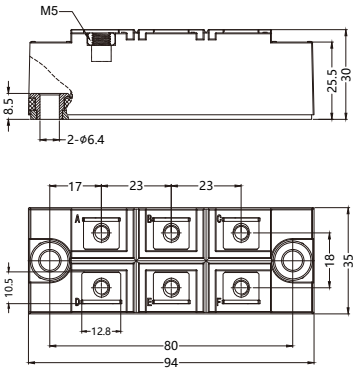

Fig. 31 (TO-240)

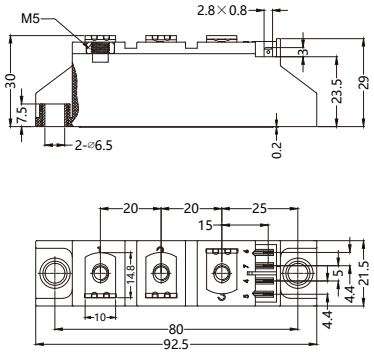

Fig. 32

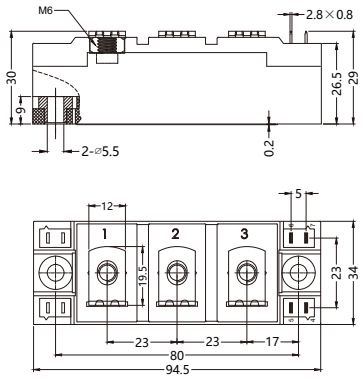

Fig. 33 (TO-240)

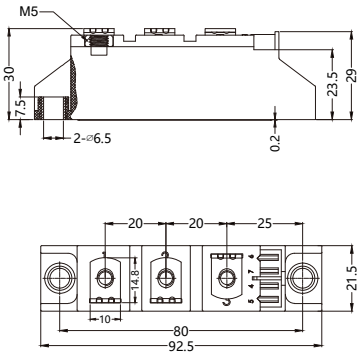

Fig. 34

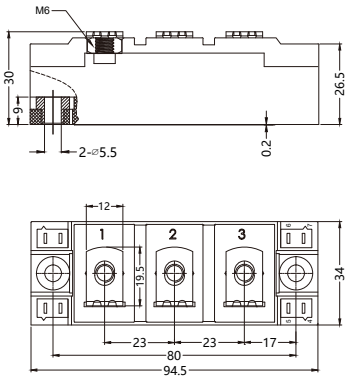

Fig. 35

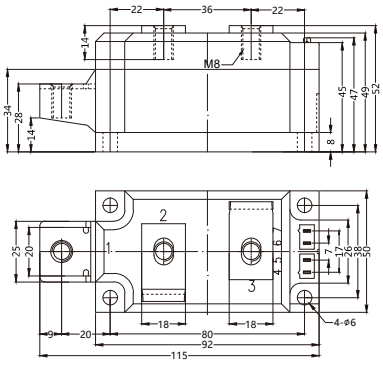

Fig. 36 (TO-240)

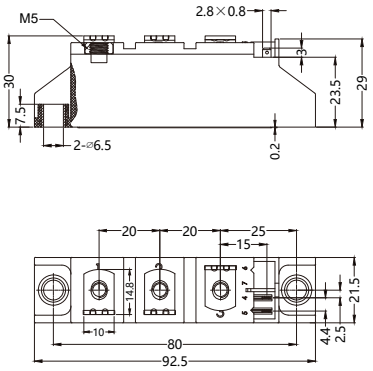

Outline Drawings

Fig. 37

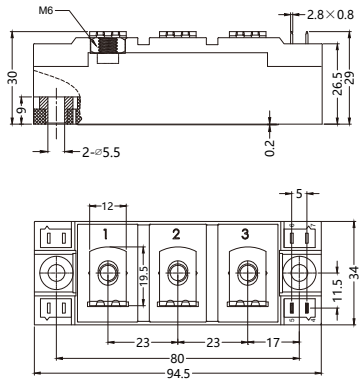

Fig. 38 (TO-240)

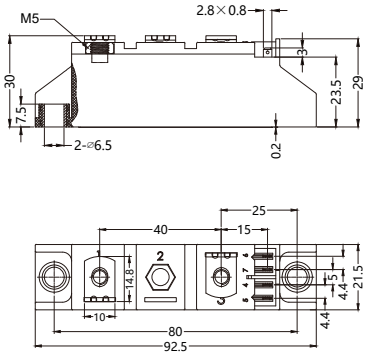

Fig. 39

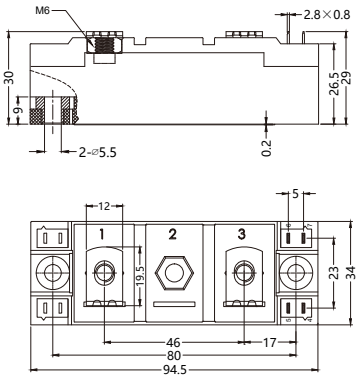

Fig. 40

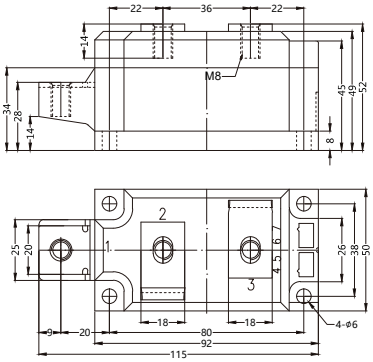

Fig. 41

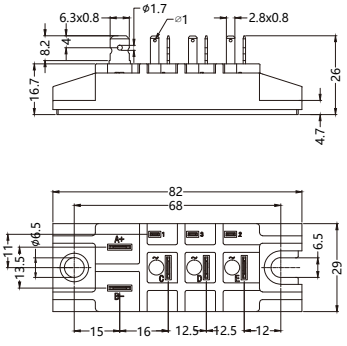

Fig. 42

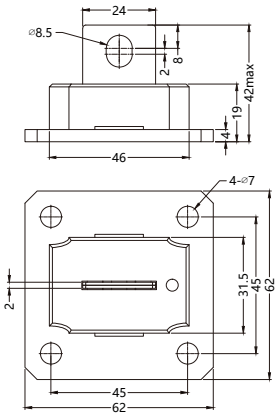

Fig. 43

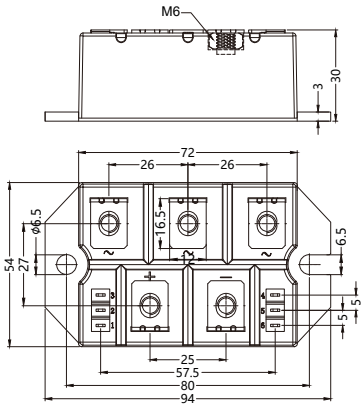

Fig. 44 (D2)

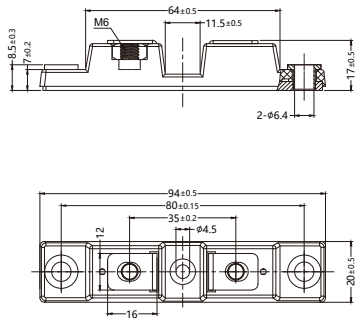

Fig.45 (D1)

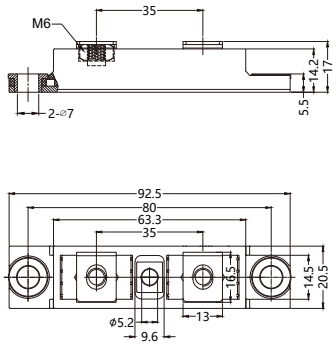

Fig. 46

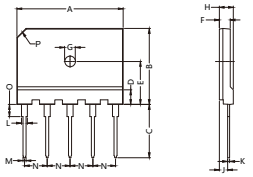

Dim.	Millimeter	
	Min.	Max.
A	34.70	35.30
B	24.70	25.30
C	17.00	18.00
D	4.50	5.10
E	13.85	14.45
F	3.40	3.65
ØG	Ø3.1	Ø3.4
H	4.40	4.65
J	2.50	2.75
K	0.60	0.75
L	2.00	2.20
M	0.90	1.00
N	7.30	7.70
O	4.00	4.00
P	-	C3

Fig. 47

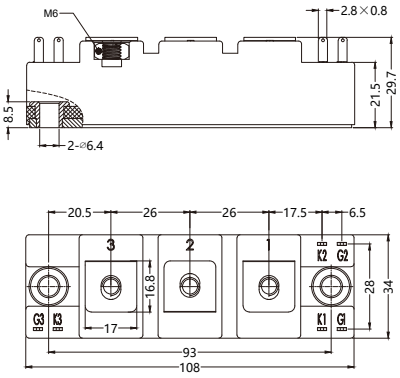

Fig. 48

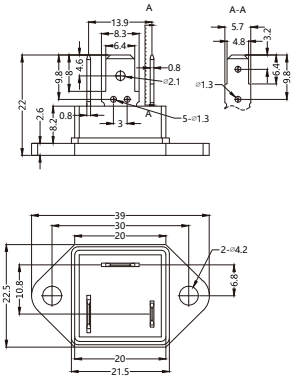

Outline Drawings

Fig. 49

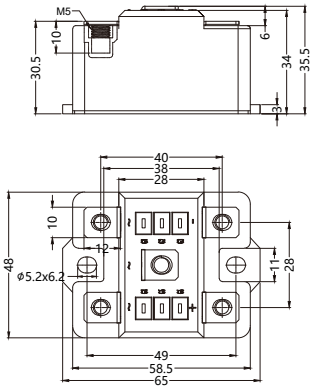

Fig. 50

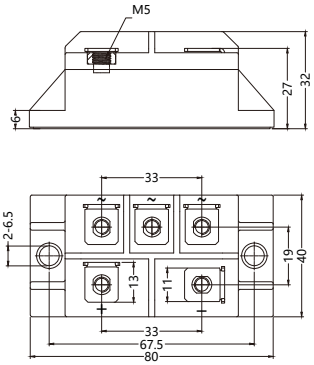

Fig. 51

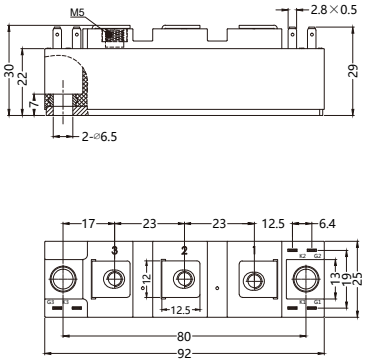

Fig. 52 (D3)

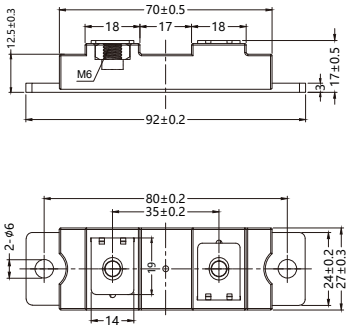

Fig. 53 (D4)

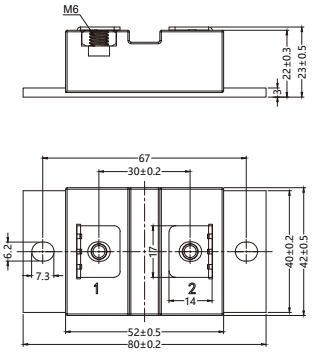

Fig. 54 (TO-247P)

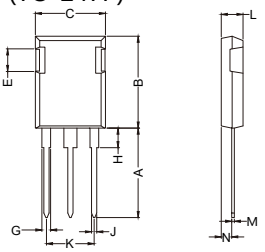

Dim.	Millimeter		Inches	
	Min.	Max.	Min.	Max.
A	19.81	20.32	0.780	0.800
B	20.80	21.46	0.819	0.845
C	15.75	16.26	0.620	0.640
E	4.32	5.49	0.170	0.216
F	5.4	6.3	0.213	0.248
G	1.65	2.13	0.065	0.084
H	3.80	4.5	0.150	0.177
J	1.0	1.4	0.039	0.055
K	10.8	11.1	0.425	0.437
L	4.7	5.3	0.185	0.209
M	0.4	0.8	0.016	0.031
N	1.5	2.49	0.059	0.098

Fig. 55

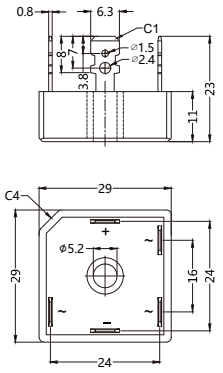

Fig. 56

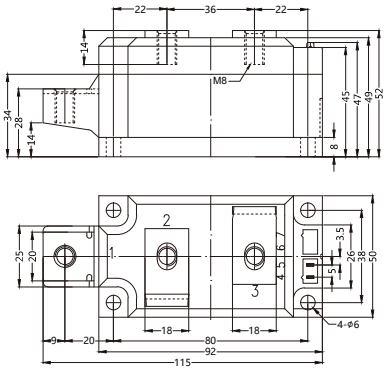

Fig. 57

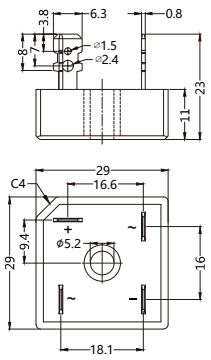

Fig. 58 (C3)

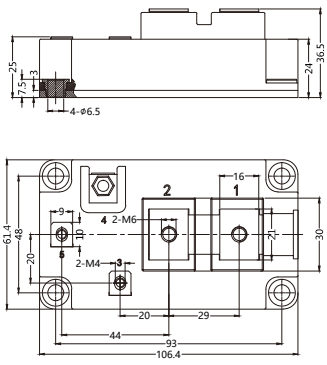

Fig. 59

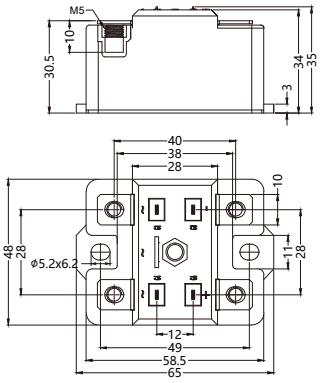

Fig. 60 (D5)

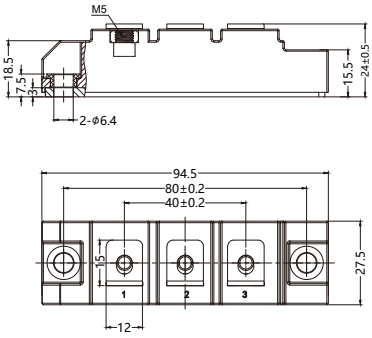

Outline Drawings

Fig. 61 (C6)

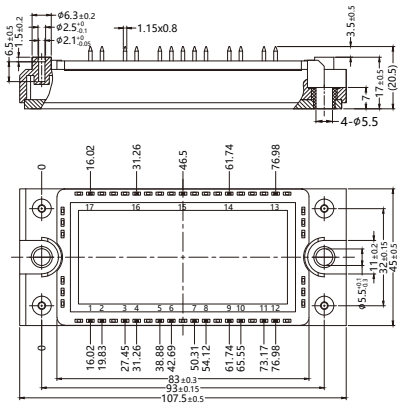

Fig. 62 (C6A)

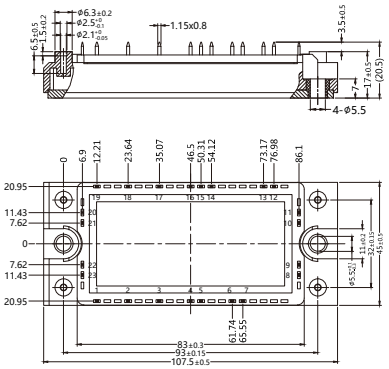

Fig. 63 (C6B)

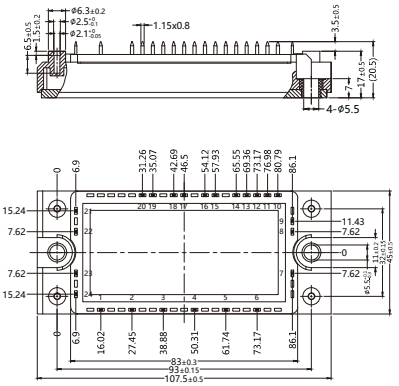

Fig. 64 (C7)

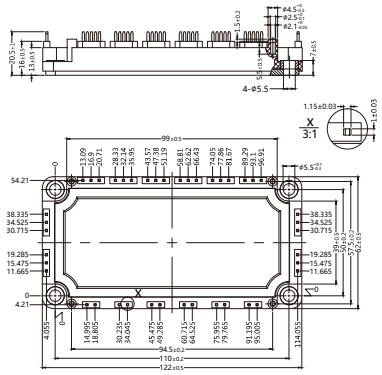

Fig. 65 (C7.1)

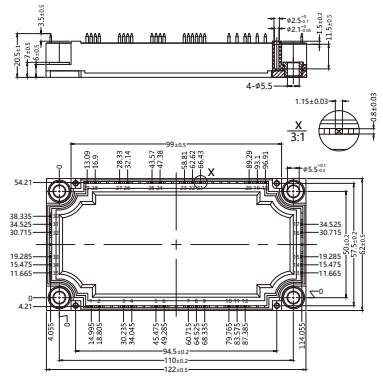

Fig. 66

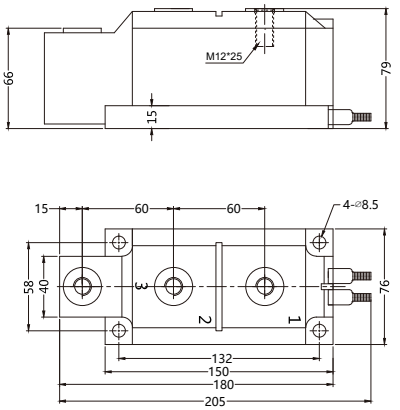

Fig. 67 (C7.2)

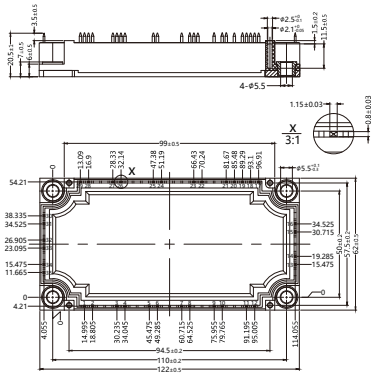

Fig. 68 (C7.3)

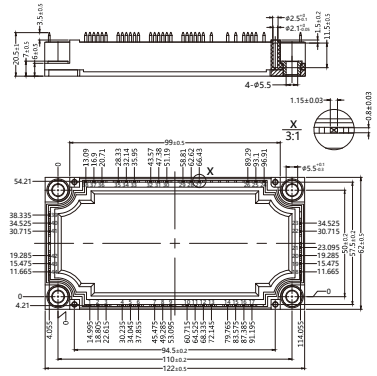

Fig. 69 (P1)

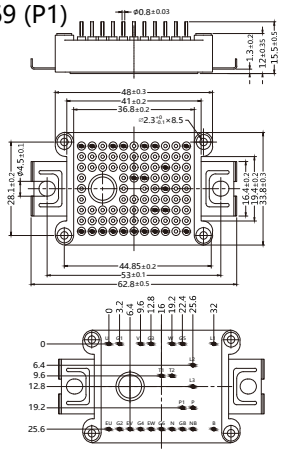

Fig. 70 (P2)

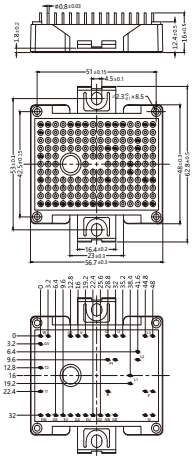

Fig. 71

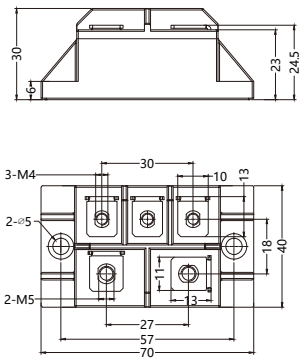

Fig. 72 (SOT-23-3L)

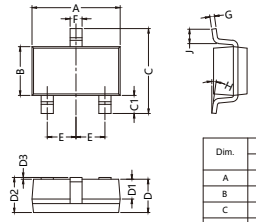

Dim.	Millimeter		
	Min.	Nom.	Max.
A	2.82	2.92	3.02
B	1.50	1.60	1.70
C	2.60	2.80	3.00
D	1.00	1.10	1.20
D1	0.60	0.65	0.70
D2	/	/	1.25
D3	0.04	/	0.10
E	0.95BSC		
F	0.33	/	0.41
G	0.15	/	0.19
H	0	/	8°
J	0.30	/	0.60

Outline Drawings

Fig. 73

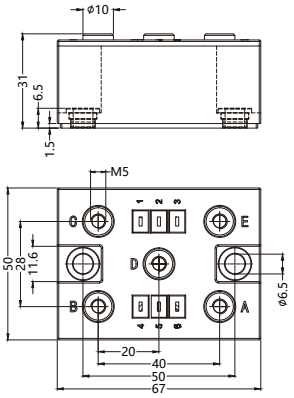

Fig. 74

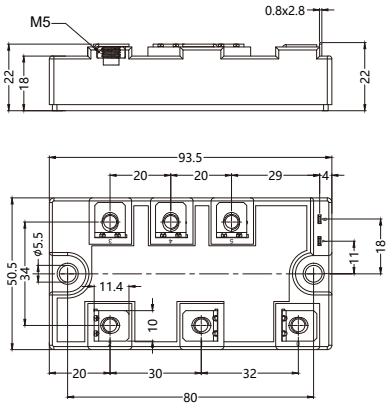

Fig. 75

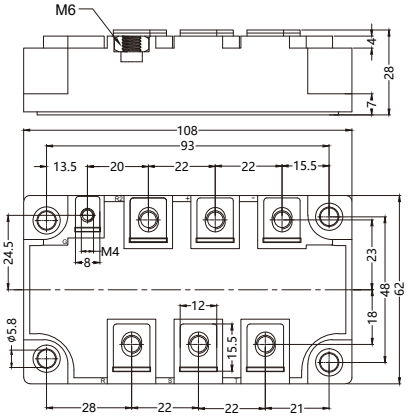

Fig. 76 (TO-264)

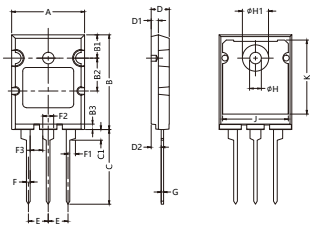

Dim.	Millimeter		Dim.	Millimeter	
	Min.	Max.		Min.	Max.
A	19.50	20.50	E	5.45TYP	
B	25.70	26.30	F	0.90	1.25
B1	5.80	6.20	F1	2.30	2.75
B2	8.80	9.20	F2	2.80	3.20
B3	1.35REF		F3	2.40	/
C	19.50	20.50	G	0.50	0.85
C1	2.20	2.70	H	3.20	3.60
D	4.80	5.20	H1	6.50	7.50
D1	2.00REF		J	16.00	/
D2	2.50	3.10	K	19.00	/

Fig. 77 (TO-220AB)

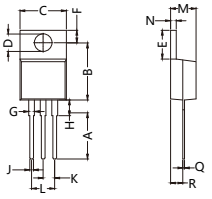

Dim.	Millimeter	
	Min.	Max.
A	12.70	13.97
B	14.73	16.00
C	9.91	10.66
ØD	3.54	4.08
E	5.85	6.85
F	2.54	3.18
G	1.15	1.65
H	2.79	5.84
J	0.64	1.01
K	2.45BSC	
L	5.05BSC	
M	4.32	4.82
N	1.14	1.39
Q	0.35	0.56
R	2.29	2.79

Fig. 78 (TO-220AC)

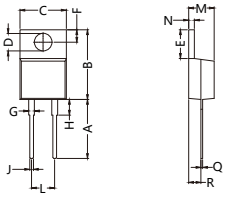

Dim.	Millimeter	
	Min.	Max.
A	12.70	13.97
B	14.73	16.00
C	9.91	10.66
ØD	3.54	4.08
E	5.85	6.85
F	2.54	3.18
G	1.15	1.65
H	2.79	5.84
J	0.64	1.01
L	5.05BSC	
M	4.32	4.82
N	1.14	1.39
Q	0.35	0.56
R	2.29	2.79

Fig. 79 (TO-247AD)

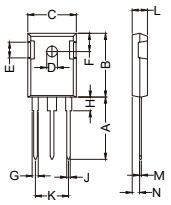

Dim.	Millimeter		Inches	
	Min.	Max.	Min.	Max.
A	19.81	20.32	0.780	0.800
B	20.80	21.46	0.819	0.845
C	15.75	16.26	0.620	0.640
ØD	3.15	3.65	0.124	0.144
E	4.32	5.49	0.170	0.216
F	5.40	6.30	0.213	0.248
G	1.65	2.18	0.065	0.086
H	3.80	4.50	0.150	0.177
J	1.00	1.40	0.039	0.055
K	10.80	11.10	0.425	0.437
L	4.70	5.30	0.185	0.209
M	0.40	0.80	0.016	0.031
N	1.50	2.49	0.059	0.098

Fig. 80 (TO-247AC)

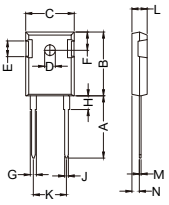

Dim.	Millimeter		Inches	
	Min.	Max.	Min.	Max.
A	19.81	20.32	0.780	0.800
B	20.80	21.46	0.819	0.845
C	15.75	16.26	0.620	0.640
ØD	3.15	3.65	0.124	0.144
E	4.32	5.49	0.170	0.216
F	5.40	6.30	0.213	0.248
G	1.65	2.13	0.065	0.084
H	3.80	4.50	0.150	0.177
J	1.00	1.40	0.039	0.055
K	10.80	11.10	0.425	0.437
L	4.70	5.30	0.185	0.209
M	0.40	0.80	0.016	0.031
N	1.50	2.49	0.059	0.098

Fig. 81 (TO-218)

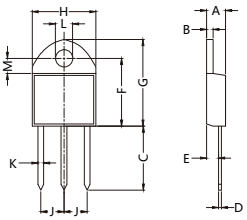

Dim.	Millimeter	
	Min.	Max.
A	4.40	4.70
B	1.45	1.65
C	14.50	16.10
D	0.45	0.80
E	2.60	2.95
F	15.80	17.00
G	20.10	21.20
H	15.00	15.80
J	5.30	5.75
K	1.25	1.55
□L	4.00	4.25
M	3.45	3.75

Fig. 82 (SOT-227/ISOTOP)

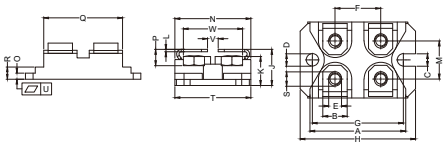

Dim.	Millimeter		Dim.	Millimeter	
	Min.	Max.		Min.	Max.
A	31.30	31.62	M	12.20	14.00
B	7.80	8.20	N	25.15	25.62
C	4.09	4.29	O	1.98	2.13
D	4.09	4.29	P	4.15	4.62
E	4.09	4.29	Q	25.90	26.30
F	14.91	15.11	R	3.94	4.42
G	30.12	30.30	S	4.45	4.85
H	38.20	38.56	T	24.59	25.07
J	12.30	12.90	U	0.05	0.10
K	8.92	9.60	V	3.00	4.80
L	0.76	0.84	W	19.81	21.08

Fig. 83 (GBJ / RS6M)

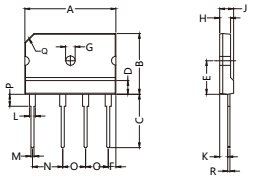

Dim.	Millimeter		Dim.	Millimeter	
	Min.	Max.		Min.	Max.
A	29.70	30.30	K	2.50	2.90
B	19.70	20.30	L	2.00	2.40
C	17.0	18.0	M	0.90	1.10
D	4.70	4.90	N	9.80	10.20
E	10.80	11.20	O	7.30	7.70
F	2.30	2.70	P	3.80	4.20
ØG	Ø3.00	Ø3.4	Q	-	C3
H	3.40	3.80	R	0.80	1.00
J	4.40	4.80			

Fig. 84 (TO-263 / D2PAK)

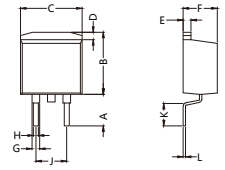

Dim.	Millimeter		Inches	
	Min.	Max.	Min.	Max.
A	5.00	5.60	0.197	0.220
B	9.32	10.52	0.367	0.414
C	9.60	10.40	0.378	0.409
D	1.10	1.40	0.043	0.055
E	1.20	1.50	0.047	0.059
F	4.32	4.82	0.170	0.190
G	1.15	1.65	0.045	0.065
H	0.64	1.00	0.025	0.039
J	4.80	5.20	0.189	0.205
K	2.80	3.90	0.110	0.154
L	0.30	0.45	0.012	0.018

Outline Drawings

Fig. 85 (TO-220F-2L)

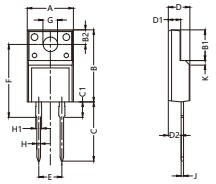

Dim.	Millimeter		Dim.	Millimeter	
	Min.	Max.		Min.	Max.
A	9.80	10.60	D2	2.30	3.30
B	15.40	16.40	E	5.08BSC	
B1	6.00	7.40	F	14.50	16.00
B2	3.20	3.80	ØG	2.90	3.40
C	12.80	13.50	H	0.60	1.00
C1	3.20	4.00	H1	1.15	1.55
D	4.35	4.95	J	0.35	0.65
D1	2.24	2.84	K	0.00	1.60

Fig. 86 (TO-220F-3L)

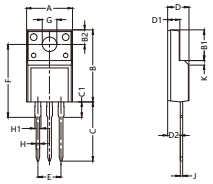

Dim.	Millimeter		Dim.	Millimeter	
	Min.	Max.		Min.	Max.
A	9.80	10.60	D2	2.30	3.30
B	15.40	16.40	E	5.08BSC	
B1	6.00	7.40	F	14.50	16.00
B2	3.20	3.80	ØG	2.90	3.40
C	12.80	13.50	H	0.60	1.00
C1	3.20	4.00	H1	1.15	1.55
D	4.35	4.95	J	0.35	0.65
D1	2.24	2.84	K	0.00	1.60

Fig. 87 (TO-251)

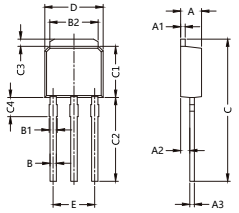

Dim.	Millimeter		Dim.	Millimeter	
	Min.	Max.		Min.	Max.
A	2.20	2.40	C	14.50	15.80
A1	0.40	0.60	C1	5.85	6.20
A2	0.70	1.30	C2	7.85	8.60
A3	0.45	0.60	C3	0.60	1.20
B	0.50	0.80	C4	1.75	2.30
B1	0.65	1.00	D	6.30	6.70
B2	5.20	5.50	E	4.40	4.60

Fig. 88 (TO-252)

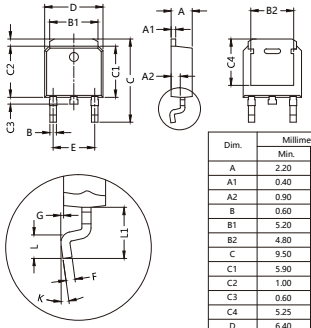

Dim.	Millimeter	
	Min.	Max.
A	2.20	2.40
A1	0.40	0.60
A2	0.90	1.25
B	0.60	1.00
B1	5.20	5.50
B2	4.80	5.20
C	9.50	10.20
C1	5.90	6.20
C2	1.00	1.30
C3	0.60	1.00
C4	5.25	5.95
D	6.40	6.70
E	4.40	4.60
F	0.45	0.60
G	0.03	0.23
K	0°	8°
L	1.00	/
L1	2.80	3.25

Fig. 89 (TO-3PF)

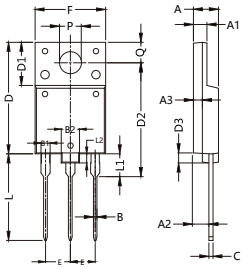

Dim.	Millimeter	
	Min.	Max.
A	5.30	5.70
A1	2.80	3.25
A2	3.10	3.70
A3	1.80	2.20
B	0.65	0.95
B1	1.90	2.15
B2	3.80	4.50
C	0.70	1.10
D	24.30	24.70
D1	9.80	10.25
D2	24.50	25.30
D3	3.30	3.70
E	5.35	5.55
F	15.30	15.70
L	18.50	19.50
L1	4.50	5.20
L2	1.90	2.20
P	3.40	3.80
Q	4.30	4.70

Fig. 90 (SOT-89-3L)

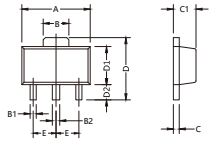

Dim.	Millimeter	
	Min.	Max.
A	4.35	4.65
B	1.55	1.85
B1	0.35	0.50
B2	0.40	0.60
C	0.35	0.50
C1	1.35	1.70
D	3.65	4.45
D1	2.30	2.70
D2	0.80	1.30
E	1.50BSC	

Fig. 91

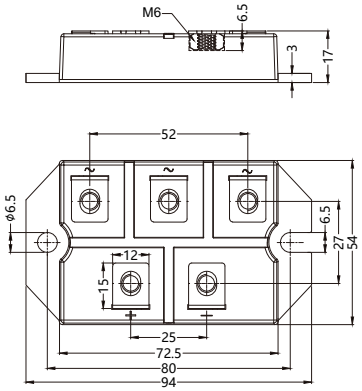

制造工厂Manufacturer

江苏亿塔电子科技有限公司

ETATRONIC Technology Co., Ltd. of Jiangsu

江苏矽莱克电子科技有限公司

SIRECTIFIER Electronics Technology Corp.

地址：江苏省常州市钟楼区西林科技工业园富林路15号

ADD: 15 Fulin Rd, Xilin Technology Industrial Park, Zhonglou District, Changzhou, Jiangsu, China

电话(Tel)：+86-519-8802 0000, 8680 0000

传真(Fax)：+86-519-8388 8666, 8801 9019

微信Wechat : 13306111101

邮箱E-mail：sales@sirectifier.com；sales@etatronic.com

网址Website：www.sirectifier.com www.etatronic.com

2025.04 Printed in china