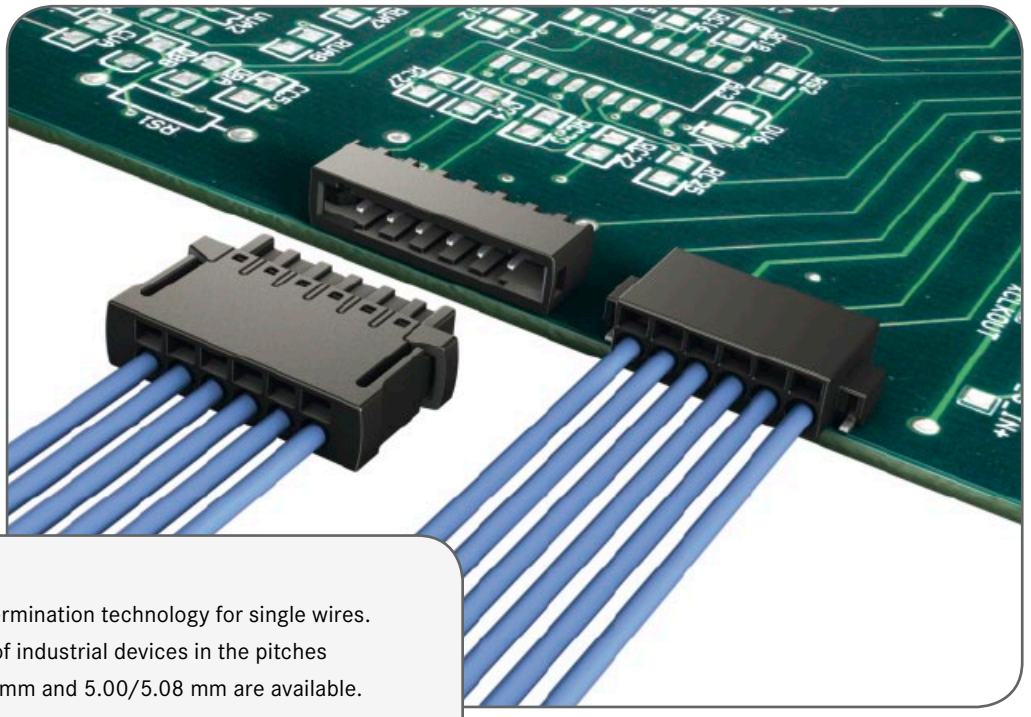

har-flexicon® is the robust PCB termination technology for single wires. Components for the termination of industrial devices in the pitches of 1.27 mm, 2.54 mm, 3.50/3.81 mm and 5.00/5.08 mm are available. All components are particularly suited for reflow-soldering on the PCB and offer field assembly with PushIn and insulation displacement termination for single wires.

Application profile:

CONNECTION TYPE		ENVIRONMENT		APPLICATION						
							high performance			
Board to Board	Cable/ Wire to Board	IP 20	IP 65 / IP 67	Data	Signal	Power	Data transfer rate	Shielding	Number of contacts, contact density	Voltage, working current
	●	●		●	●	●	●		●	●

Cable termination

Han-Quick Lock®	*IDC*	*Crimp*
	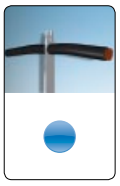	
	●	

Screw	*Cage clamp /* PushIn	*Axial screw*
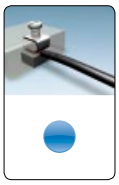	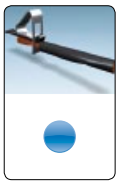	
●	●	

PCB termination

THT	*SMC*	*SMT*
	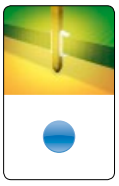	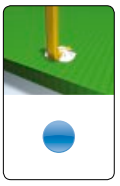
	●	●

Press-in
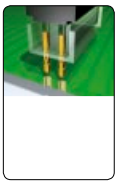

Application standard

SCSI

Housing integration

Separate housing	*Integrated housing*

CONTENTS PAGE

har-flexicon® connector system – introduction	15.02
Pitches 1.27 mm / 2.54 mm	
PCB connectors female with IDC termination	15.04
PCB terminal blocks with push-in-spring-cage termination	15.06
PCB connectors female with push-in-spring-cage termination	15.08
PCB connectors male	15.10
Pitches 3.50 mm / 3.81 mm	
PCB terminal blocks with push-in-spring-cage termination	15.12
PCB terminal blocks with screw termination	15.14
PCB connectors female with push-in-spring-cage termination	15.16
PCB connectors female with screw termination	15.18
PCB connectors male	15.20
Pitches 5.00 mm / 5.08 mm	
PCB terminal blocks with push-in-spring-cage termination	15.22
PCB terminal blocks with screw termination	15.24
PCB connectors female with push-in-spring-cage termination	15.28
PCB connectors female with screw termination	15.30
PCB connectors male	15.32

har-flexicon® CONNECTORS

Innovative device connectivity technology for all lifelines of industrial devices - it routes power, data and signals through the side of the device to the PCB.

HARTING *har*-flexicon® is the miniature SMD connector for the rapid connection of single wires and provides a perfect link between the periphery and PCBs in industrial devices. HARTING is thereby continuing along the path already taken with the *har*-flex® of rethinking and methodically optimizing device connectivity technology.

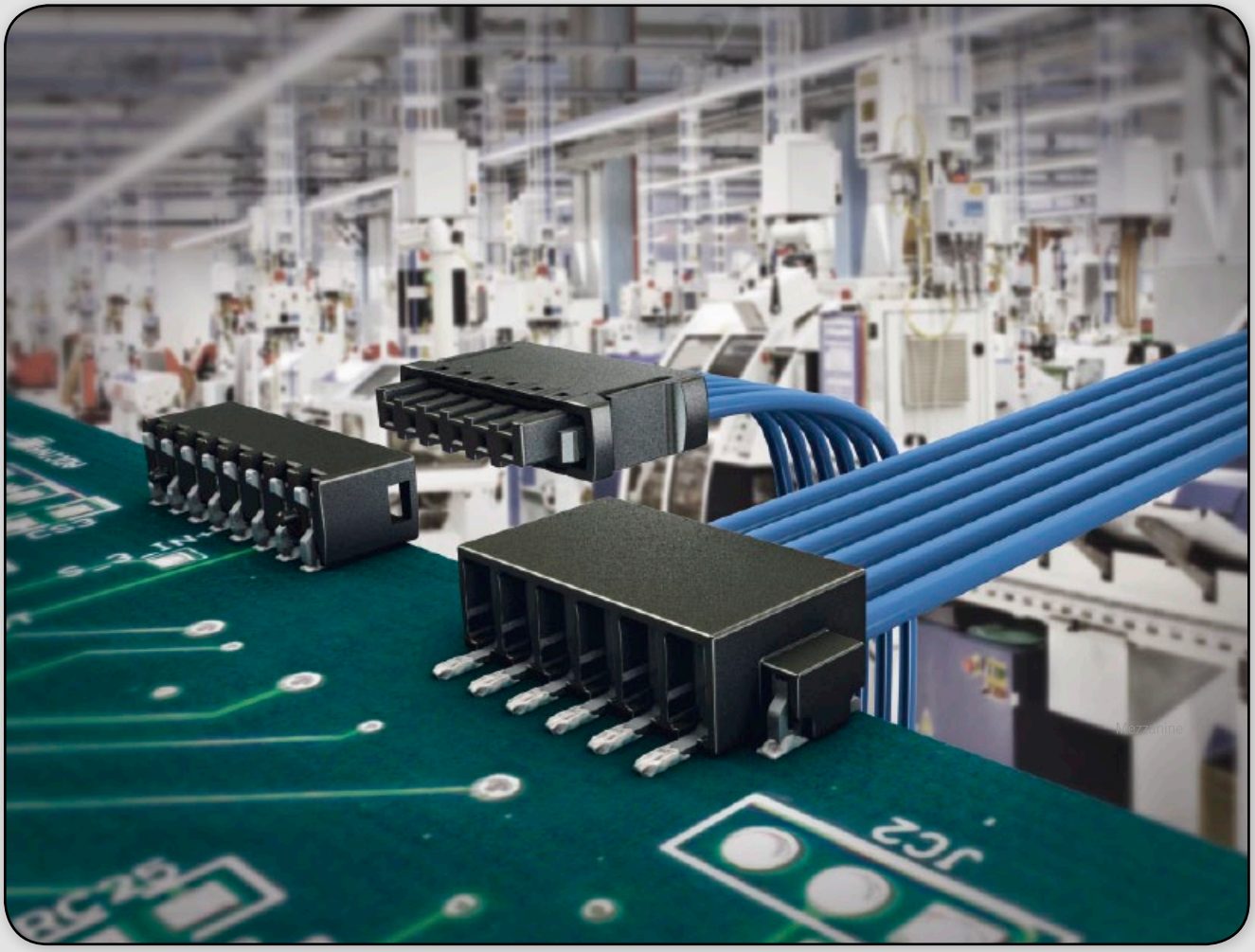

RAPID CONNECTION OF INDIVIDUAL WIRES

har-flexicon® is very easy and quick to use for the smallest of designs. This, in conjunction with a precise cable manager, is what the IDC and the push-in spring-cage termination technology guarantees.

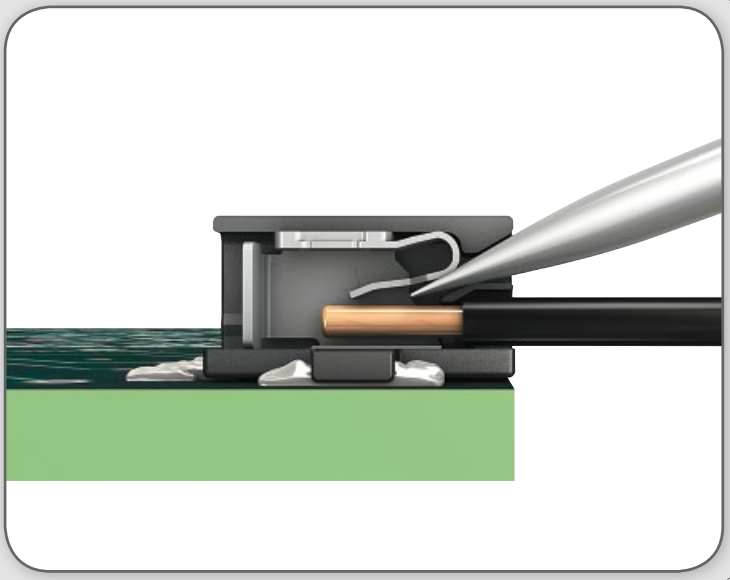

ROBUST SMD DESIGN

The large-area SMT fixings of *har*-flexicon® provide a sturdy connection to the PCB. Insertion and withdrawal forces can be absorbed in order to take the pressure off solder contacts on the connection side.

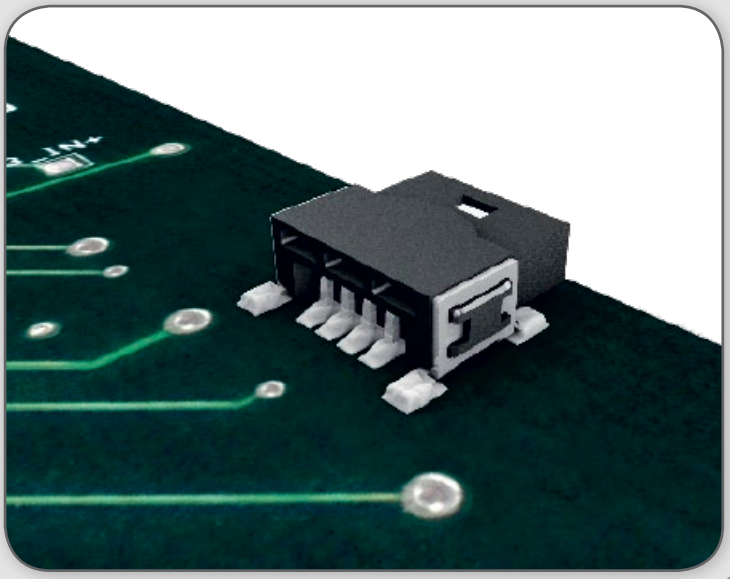

FULLY AUTOMATIC PROCESSING

The use of reflow and SMD-solderable components in automated mount and soldering processes simplifies, and hence optimizes, the production of PCBs.

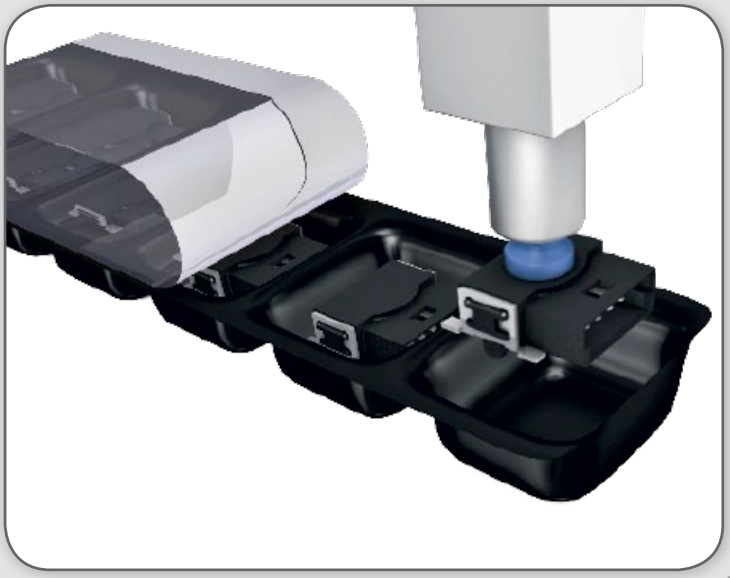

PCB connectors with IDC termination
for SMT reflow soldering
pitch 1.27 mm

Identification	No. of contacts	Part No.	Packaging unit (pieces)
PCB connectors with IDC termination			
Female	4	14 31 041 0301 000	50
Male	4	14 11 041 0002 000	560
Screw driver, 1.5 x 40		14 99 000 0002	

PCB connectors with IDC termination
for SMT reflow soldering
pitch 1.27 mm

Drawing

Dimensions in mm

Dimensions

female

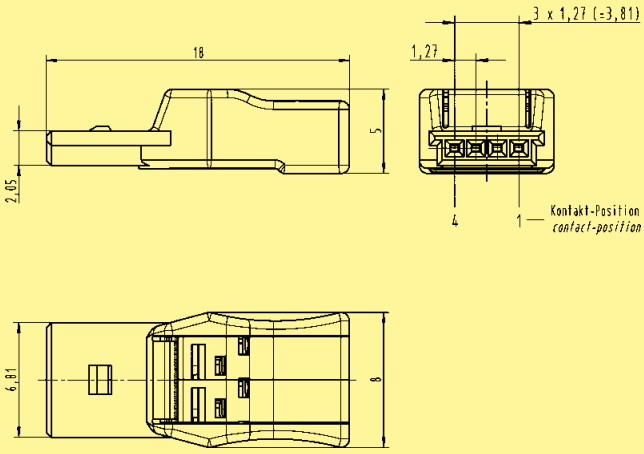

male

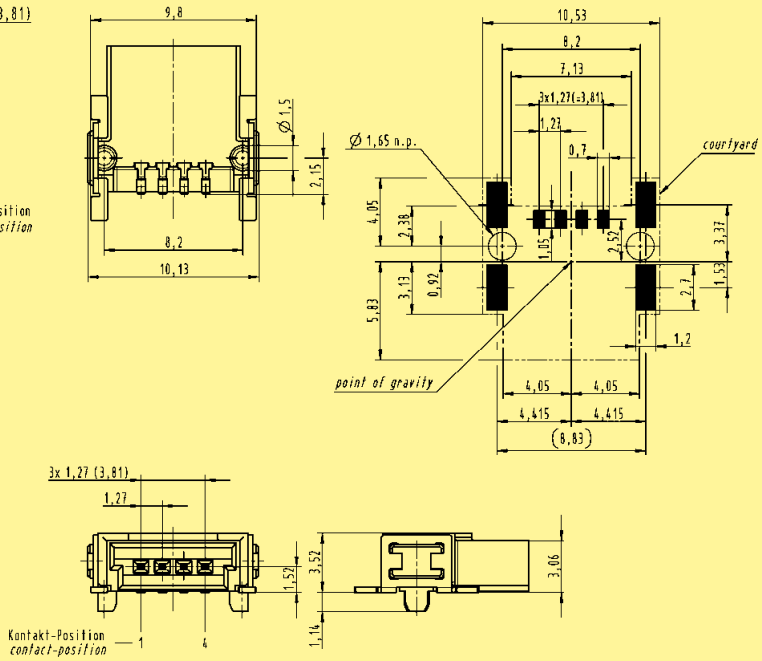

Technical characteristics

Technical data

Rated current	2 A
Pitch	1.27 mm

Surge voltage category / pollution degree	III/3	III/2	II/2
Rated voltage	–	–	16 V
Rated surge voltage	–	–	0.5 kV

Conductor data

Connection technology wire	IDC termination
Conductor size solid / stranded	– / 0.05 - 0.14 mm²
Conductor size AWG	28 - 26
Stripping length	0 mm
Conductor diameter	max. 1 mm

Material data

Group of insulation material	III a
Type of insulation material	LCP
Flammability rating per UL 94	V0
Operating temperature	-40 °C … +125 °C
Contact material	Copper alloy
Contact plating	Nickel plated

PCB terminal blocks,
vertical/horizontal
with push-in-spring-cage termination
for SMT reflow soldering
pitch 2.54 mm

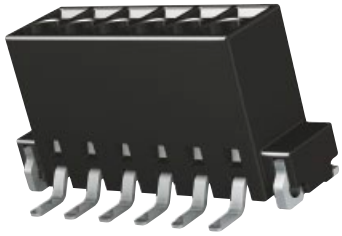

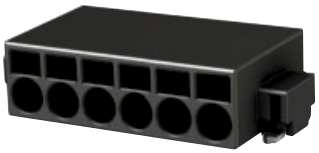

Identification	No. of contacts	Part No.	Packaging unit (pieces)
PCB terminal blocks, vertical/horizontal with push-in-spring-cage termination			vertical / horizontal
	2	14 01 021 310 . . .	250 / 500
	3	14 01 031 310 . . .	250 / 500
	4	14 01 041 310 . . .	250 / 500
	5	14 01 051 310 . . .	250 / 500
	6	14 01 061 310 . . .	250 / 500
	7	14 01 071 310 . . .	250 / 500
	8	14 01 081 310 . . .	250 / 500
	9	14 01 091 310 . . .	250 / 500
	10	14 01 101 310 . . .	250 / 500
	11	14 01 111 310 . . .	250 / 500
	12	14 01 121 310 . . .	250 / 500

Please insert digit for

vertical ▶ 1

horizontal ▶ 2

Suitable screw driver 2.0 x 40: Part No. 14 99 000 0001

333 000 for samples
for 250/500 pieces on reel

PCB terminal blocks,
vertical/horizontal
with push-in-spring-cage termination
for SMT reflow soldering
pitch 2.54 mm

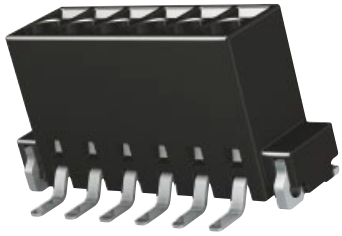

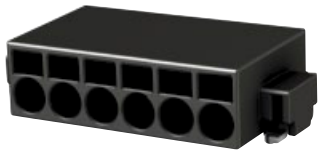

Drawing

Dimensions in mm

Dimensions

vertical

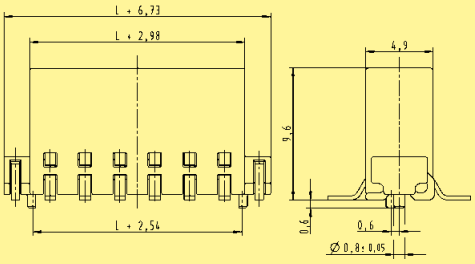

horizontal

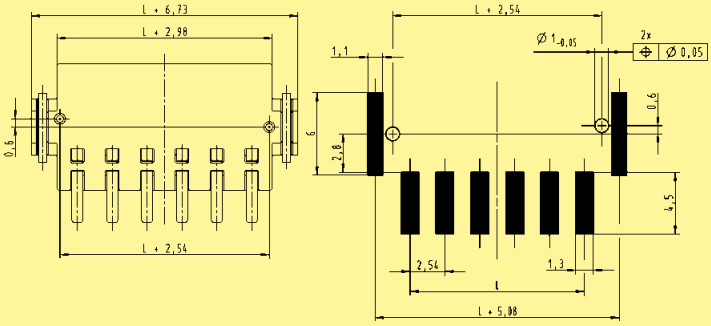

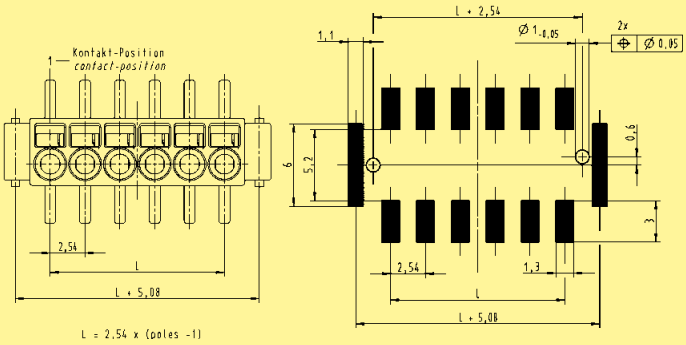

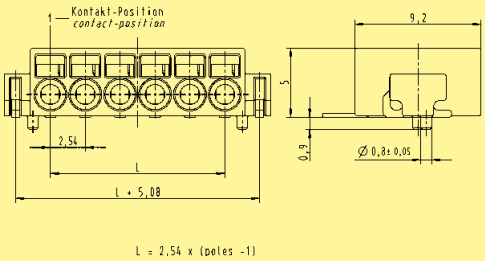

Technical characteristics

Technical data

Rated current	6 A
Pitch	2.54 mm

Surge voltage category / pollution degree	III/3	III/2	II/2
Rated voltage	32 V	160 V	160 V
Rated surge voltage	2.5 kV	2.5 kV	2.5 kV

Conductor data

Connection technology wire	push-in-spring-cage termination
Conductor size solid / stranded	0.14 - 0.5 / 0.2 - 0.5 mm²
Conductor size AWG	24 - 20
Stripping length	6 mm

Material data

Group of insulation material	III a
Type of insulation material	LCP
Flammability rating per UL 94	V0
Operating temperature	-40 °C … +125 °C
Contact material	copper alloy
Contact plating	tin plated

PCB connectors female,
vertical
with push-in-spring-cage termination
pitch 2.54 mm

Identification	No. of contacts	Part No.		Packaging unit (pieces)
PCB connectors female, vertical with push-in-spring-cage termination				
	2	14 31 021 3101	. . .	200
	3	14 31 031 3101	. . .	200
	4	14 31 041 3101	. . .	200
	5	14 31 051 3101	. . .	150
	6	14 31 061 3101	. . .	150
	7	14 31 071 3101	. . .	150
	8	14 31 081 3101	. . .	100
	9	14 31 091 3101	. . .	100
	10	14 31 101 3101	. . .	100
	11	14 31 111 3101	. . .	50
	12	14 31 121 3101	. . .	50

Suitable screw driver 2.0 x 40: Part No. 14 99 000 0001

333 for samples
000 for a packaging unit

PCB connectors female,
vertical
with push-in-spring-cage termination
pitch 2.54 mm

Drawing

Dimensions in mm

Dimensions

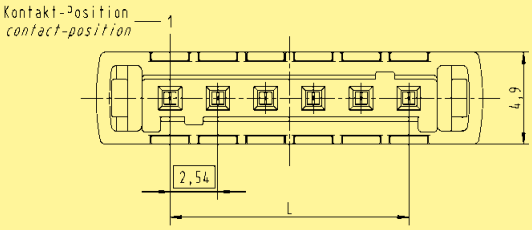

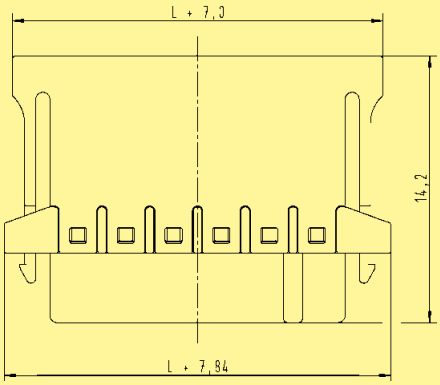

L = pitch x (poles - 1)

Technical characteristics

Technical data

Rated current	6 A
Pitch	2.54 mm

Surge voltage category / pollution degree	III/3	III/2	II/2
Rated voltage	32 V	160 V	160 V
Rated surge voltage	2.5 kV	2.5 kV	2.5 kV

Conductor data

Connection technology wire	push-in-spring-cage termination
Conductor size solid / stranded	0.14 - 0.5 / 0.2 - 0.5 mm²
Conductor size AWG	24 - 20
Stripping length	6 mm

Material data

Group of insulation material	III a
Type of insulation material	LCP
Flammability rating per UL 94	V0
Operating temperature	-40 °C … +125 °C
Contact material	copper alloy
Contact plating	tin plated

PCB connectors male,
vertical/horizontal
for SMT reflow soldering
pitch 2.54 mm

Identification	No. of contacts	Part No.				Packaging unit (pieces)
PCB connectors male, vertical/horizontal						vertical / horizontal
	2	14 11 021 300	.	. . .		500 / 600
	3	14 11 031 300	.	. . .		500 / 600
	4	14 11 041 300	.	. . .		500 / 600
	5	14 11 051 300	.	. . .		500 / 600
	6	14 11 061 300	.	. . .		500 / 600
	7	14 11 071 300	.	. . .		500 / 600
	8	14 11 081 300	.	. . .		500 / 600
	9	14 11 091 300	.	. . .		500 / 600
	10	14 11 101 300	.	. . .		500 / 600
	11	14 11 111 300	.	. . .		500 / 600
	12	14 11 121 300	.	. . .		500 / 600

Please insert digit for

vertical ▶ 1

horizontal ▶ 2

333
000
for samples
for 500/600 pieces on reel

PCB connectors male,
vertical/horizontal
for SMT reflow soldering
pitch 2.54 mm

Drawing

Dimensions in mm

Dimensions

vertical

horizontal

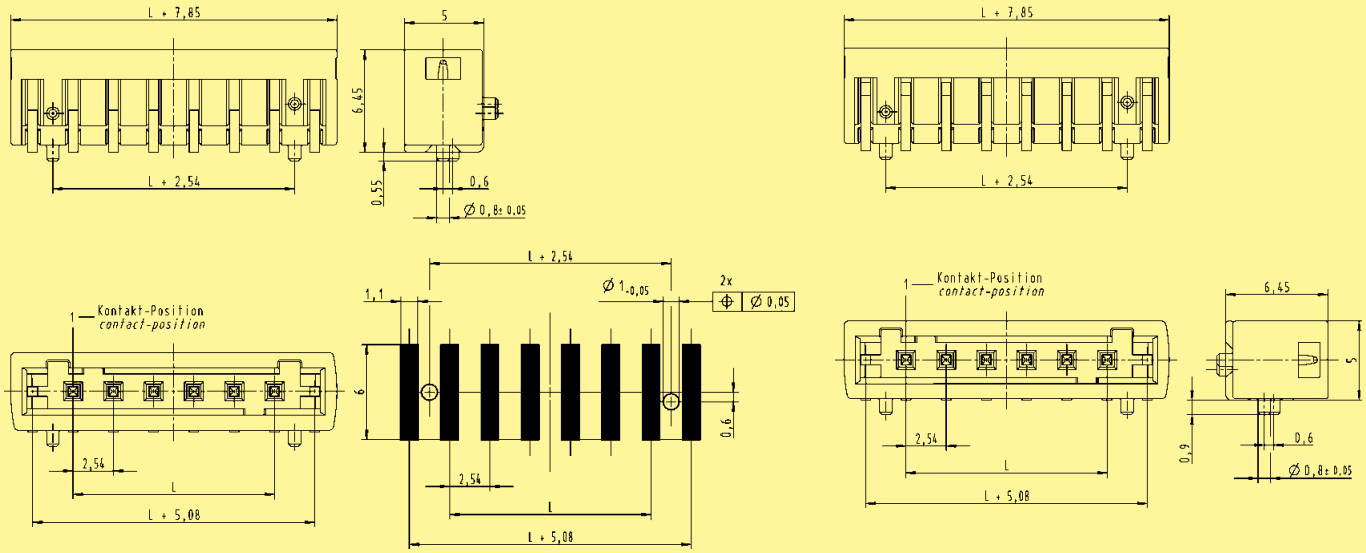

L = pitch x (poles - 1)

Technical characteristics

Technical data

Rated current	6 A
Pitch	2.54 mm

Surge voltage category / pollution degree	III/3	III/2	II/2
Rated voltage	32 V	160 V	160 V
Rated surge voltage	2.5 kV	2.5 kV	2.5 kV

Material data

Group of insulation material	III a
Type of insulation material	LCP
Flammability rating per UL 94	V0
Operating temperature	-40 °C … +125 °C
Contact material	copper alloy
Contact plating	tin plated

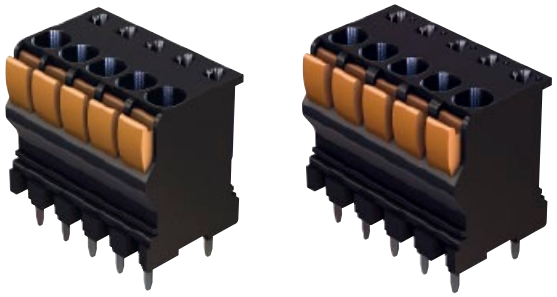

PCB terminal blocks,
vertical with push-in-spring-cage termination
for reflow soldering
pitch 3.50 / 3.81 mm

Identification	No. of contacts	Part No.				Packaging unit (pieces)
PCB terminal blocks, vertical with push-in-spring-cage termination						
	2	14 02 021	.	101	. . .	100
	3	14 02 031	.	101	. . .	100
	4	14 02 041	.	101	. . .	75
	5	14 02 051	.	101	. . .	75
	6	14 02 061	.	101	. . .	50
	7	14 02 071	.	101	. . .	50
	8	14 02 081	.	101	. . .	50
	9	14 02 091	.	101	. . .	50
	10	14 02 101	.	101	. . .	50
	11	14 02 111	.	101	. . .	50
	12	14 02 121	.	101	. . .	50
	13	14 02 131	.	101	. . .	50
	14	14 02 141	.	101	. . .	50
	15	14 02 151	.	101	. . .	50
	16	14 02 161	.	101	. . .	50

Please insert digit for

pitch 3.50 mm ▶ 4

pitch 3.81 mm ▶ 5

333 000 for samples for a packaging unit

PCB terminal blocks,
vertical with push-in-spring-cage termination
for reflow soldering
pitch 3.50 / 3.81 mm

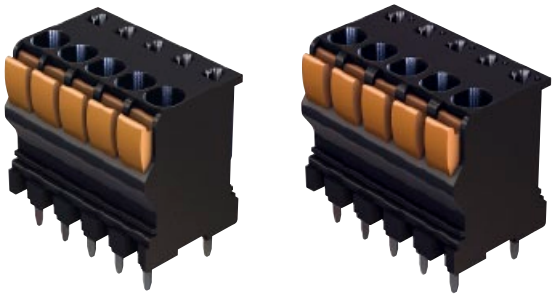

Drawing

Dimensions in mm

Dimensions

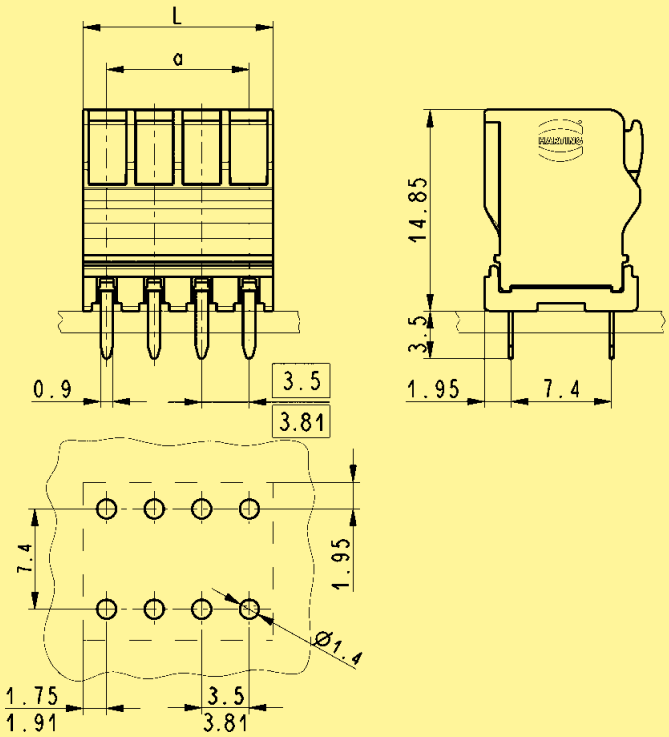

L = pitch x poles
a = pitch x (poles - 1)

Technical characteristics

Technical data

Rated current	10 A
Pitch	3.50 mm / 3.81 mm

Surge voltage category / pollution degree	III/3	III/2	II/2
Rated voltage	220 V	300 V	600 V
Rated surge voltage	4 kV	4 kV	4 kV

Conductor and solder pin data

Connection technology wire	push-in-spring-cage termination
Conductor size solid / stranded	0.14 - 1.5 / 0.14 - 1.5 mm²
Conductor size AWG	30 - 16
Stripping length	9 - 10 mm
Solder pin: drilled hole diameter	1.4 mm

Material data

Group of insulation material	I
Type of insulation material	PA / PPA
Flammability rating per UL 94	V0
Operating temperature	-40 °C … +110 °C
Contact material	copper alloy
Contact plating	tin plated

PCB terminal blocks,
horizontal with screw termination
for reflow soldering
pitch 3.50 / 3.81 mm

Identification	No. of contacts	Part No.	Packaging unit (pieces)
PCB terminal blocks, horizontal with screw termination			
	2	14 02 021 . 402 . . .	100
	3	14 02 031 . 402 . . .	100
	4	14 02 041 . 402 . . .	75
	5	14 02 051 . 402 . . .	75
	6	14 02 061 . 402 . . .	50
	7	14 02 071 . 402 . . .	50
	8	14 02 081 . 402 . . .	50
	9	14 02 091 . 402 . . .	50
	10	14 02 101 . 402 . . .	50
	11	14 02 111 . 402 . . .	50
	12	14 02 121 . 402 . . .	50

Please insert digit for

pitch 3.50 mm ▶ 4

pitch 3.81 mm ▶ 5

333 000 for samples
for a packaging unit

PCB terminal blocks,
horizontal with screw termination
for reflow soldering
pitch 3.50 / 3.81 mm

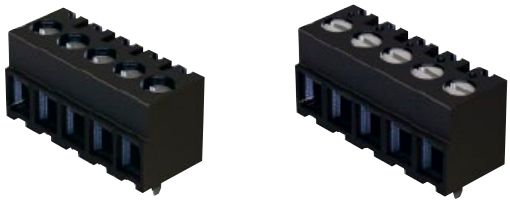

Drawing

Dimensions in mm

Dimensions

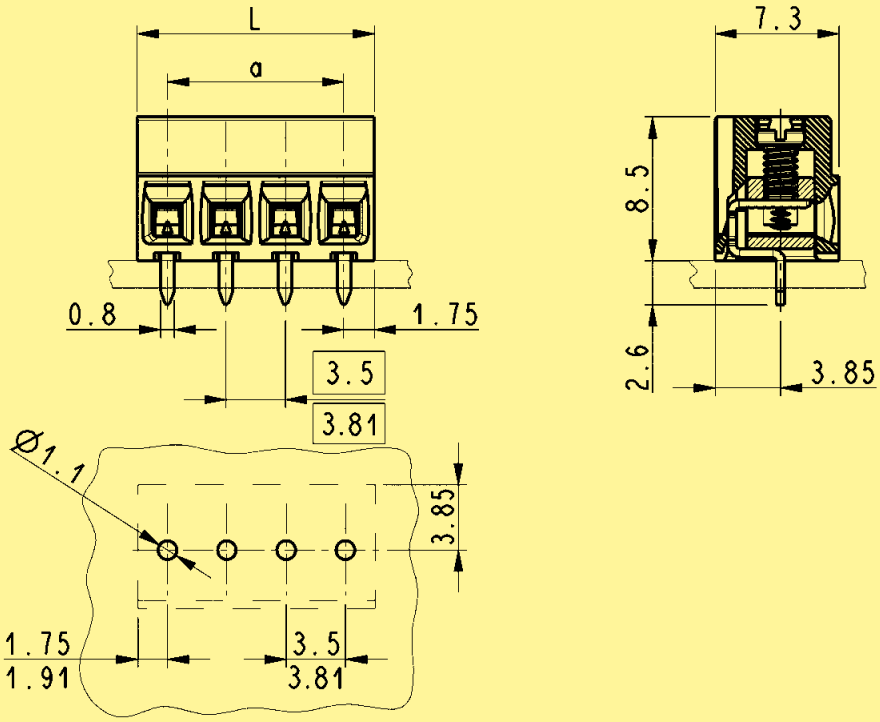

L = pitch x poles
a = pitch x (poles - 1)

Technical characteristics

Technical data

Rated current	12 A
Pitch	3.50 mm / 3.81 mm

Surge voltage category / pollution degree	III/3	III/2	II/2
Rated voltage	150 V	150 V	300 V
Rated surge voltage	2.5 kV	2.5 kV	2.5 kV

Conductor and solder pin data

Connection technology wire	screw termination
Conductor size solid / stranded	0.05 - 1.5 / 0.05 - 1 mm²
Conductor size AWG	28 - 16
Screw thread	M2
Tightening torque	0.2 - 0,25 Nm
Stripping length	5 - 6 mm
Solder pin: drilled hole diameter	1.1 mm

Material data

Group of insulation material	I
Type of insulation material	PA / PPA
Flammability rating per UL 94	V0
Operating temperature	-40 °C … +110 °C
Contact material	copper alloy
Contact plating	tin plated

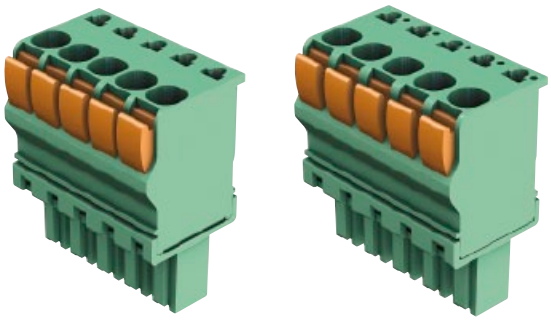

PCB connectors female,
horizontal
with push-in-spring-cage termination
pitch 3.50 / 3.81 mm

Identification	No. of contacts	Part No.				Packaging unit (pieces)
PCB connectors female, horizontal with push-in-spring-cage termination						
	2	14 31 021	.	102	. . .	300
	3	14 31 031	.	102	. . .	200
	4	14 31 041	.	102	. . .	150
	5	14 31 051	.	102	. . .	150
	6	14 31 061	.	102	. . .	100
	7	14 31 071	.	102	. . .	100
	8	14 31 081	.	102	. . .	100
	9	14 31 091	.	102	. . .	100
	10	14 31 101	.	102	. . .	100
	11	14 31 111	.	102	. . .	100
	12	14 31 121	.	102	. . .	100
	13	14 31 131	.	102	. . .	50
	14	14 31 141	.	102	. . .	50
	15	14 31 151	.	102	. . .	50
	16	14 31 161	.	102	. . .	50
	17	14 31 171	.	102	. . .	50
	18	14 31 181	.	102	. . .	50
	19	14 31 191	.	102	. . .	50
	20	14 31 201	.	102	. . .	50
	21*	14 31 211	.	102	. . .	25
	22*	14 31 221	.	102	. . .	25
	23*	14 31 231	.	102	. . .	25
	24*	14 31 241	.	102	. . .	25
	25*	14 31 251	.	102	. . .	25

Please insert digit for

pitch 3.50 mm ▶ 4

pitch 3.81 mm ▶ 5

* Pitch 3.50 mm only available with 2-20 contacts

333 000 for samples
for a packaging unit

PCB connectors female,
horizontal
with push-in-spring-cage termination
pitch 3.50 / 3.81 mm

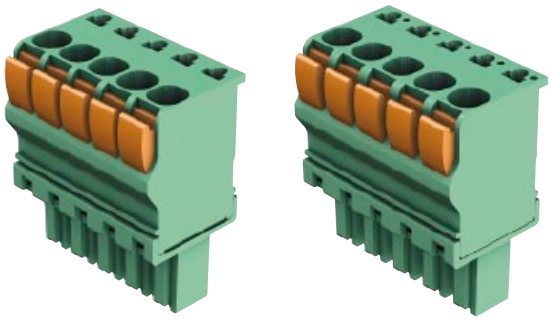

Drawing

Dimensions in mm

Dimensions

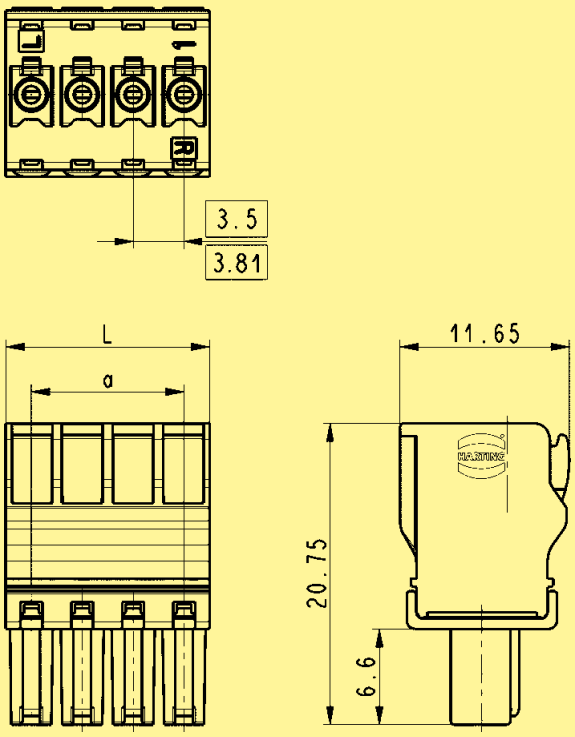

L = pitch x poles
a = pitch x (poles - 1)

Technical characteristics

Technical data

Rated current	11 A
Pitch	3.50 mm / 3.81 mm

Surge voltage category / pollution degree	III/3	III/2	II/2
Rated voltage	150 V	150 V	300 V
Rated surge voltage	2.5 kV	2.5 kV	2.5 kV

Conductor data

Connection technology wire	push-in-spring-cage termination
Conductor size solid / stranded	0.14 - 1.5 / 0.14 - 1.5 mm²
Conductor size AWG	30 - 14
Stripping length	9 - 10 mm

Material data

Group of insulation material	I
Type of insulation material	PA / PPA
Flammability rating per UL 94	V0
Operating temperature	-40 °C … +110 °C
Contact material	copper alloy
Contact plating	tin plated

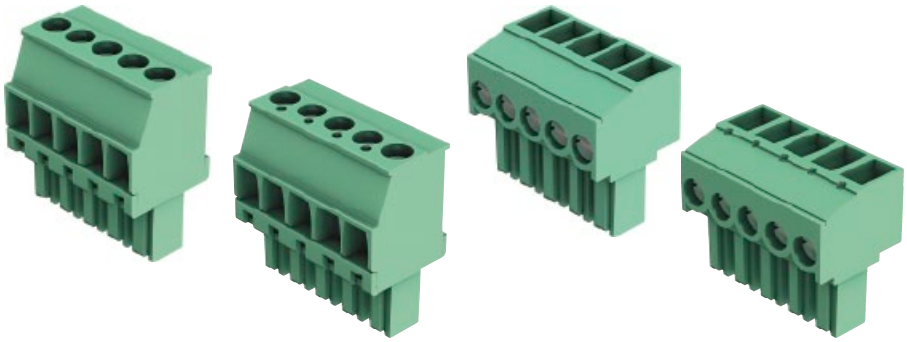

PCB connectors female, vertical/horizontal with screw termination pitch 3.50 / 3.81 mm

Identification	No. of contacts	Part No.				Packaging unit (pieces)
PCB connectors female, vertical/horizontal with screw termination						
	2	14 31 021	. 40	.	. . .	300
	3	14 31 031	. 40	.	. . .	200
	4	14 31 041	. 40	.	. . .	150
	5	14 31 051	. 40	.	. . .	150
	6	14 31 061	. 40	.	. . .	100
	7	14 31 071	. 40	.	. . .	100
	8	14 31 081	. 40	.	. . .	100
	9	14 31 091	. 40	.	. . .	100
	10	14 31 101	. 40	.	. . .	100
	11	14 31 111	. 40	.	. . .	100
	12	14 31 121	. 40	.	. . .	100
	13	14 31 131	. 40	.	. . .	50
	14	14 31 141	. 40	.	. . .	50
	15	14 31 151	. 40	.	. . .	50
	16	14 31 161	. 40	.	. . .	50
	17*	14 31 171	. 40	.	. . .	50
	18*	14 31 181	. 40	.	. . .	50
	19*	14 31 191	. 40	.	. . .	50
	20*	14 31 201	. 40	.	. . .	50
	21*	14 31 211	. 40	.	. . .	25
	22*	14 31 221	. 40	.	. . .	25
	23*	14 31 231	. 40	.	. . .	25
	24*	14 31 241	. 40	.	. . .	25
	25*	14 31 251	. 40	.	. . .	25

Please insert digit for

pitch 3.50 mm ▶ 4

pitch 3.81 mm ▶ 5

vertical ▶ 1

horizontal ▶ 2

* Pitch 3.81 mm (vertical) only available with 2-16 contacts

333 000 for samples for a packaging unit

PCB connectors female,
vertical/horizontal
with screw termination
pitch 3.50 / 3.81 mm

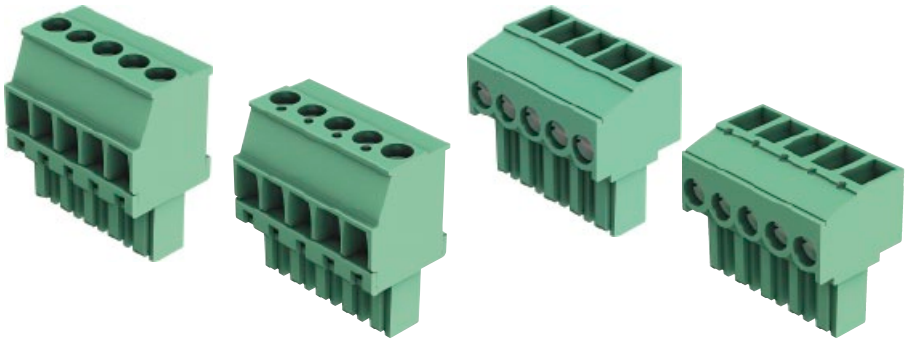

Drawing

Dimensions in mm

Dimensions

vertical

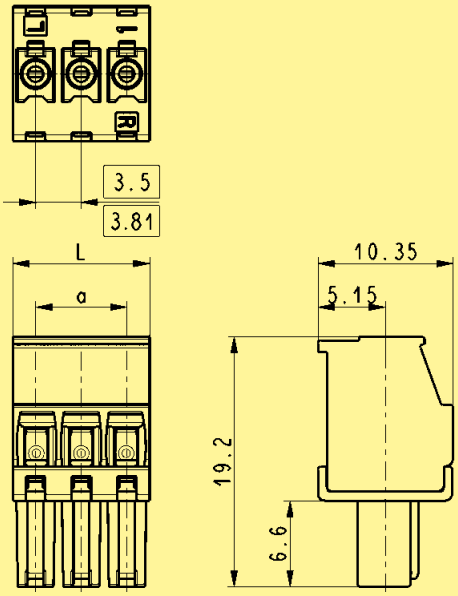

L = pitch x poles
a = pitch x (poles - 1)

horizontal

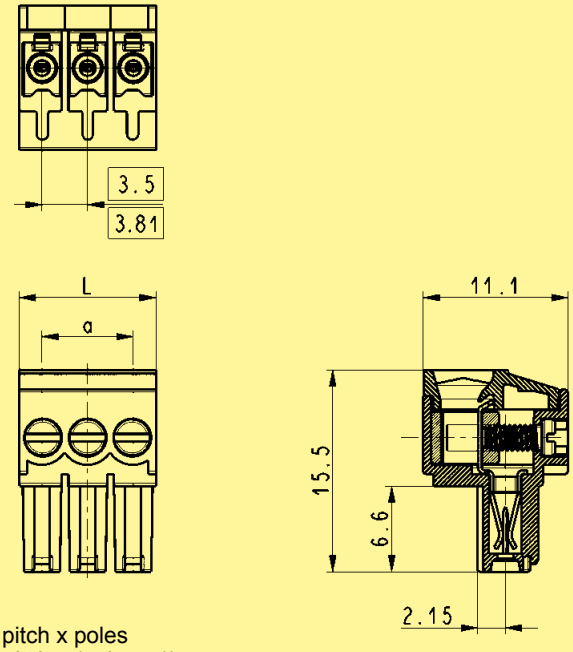

L = pitch x poles
a = pitch x (poles - 1)

Technical characteristics

Technical data

Rated current	10 A
Pitch	3.50 mm / 3.81 mm

Surge voltage category / pollution degree	III/3	III/2	II/2
Rated voltage	150 V	150 V	300 V
Rated surge voltage	2.5 kV	2.5 kV	2.5 kV

Conductor data

Connection technology wire	screw termination
Conductor size solid / stranded	0.05 - 1.5 / 0.05 - 1.5 mm²
Conductor size AWG	30 - 14
Screw thread	M2
Tightening torque	0.2 - 0.25 Nm
Stripping length	5.0 - 6.0 mm

Material data

Group of insulation material	I
Type of insulation material	PA / PPA
Flammability rating per UL 94	V0
Operating temperature	-40 °C … +110 °C
Contact material	copper alloy
Contact plating	tin plated

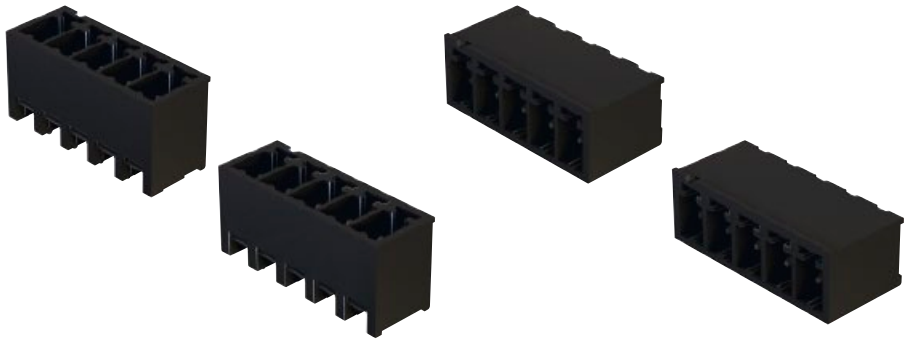

PCB connectors male, vertical/horizontal for reflow soldering pitch 3.50 / 3.81 mm

Identification	No. of contacts	Part No.					Packaging unit (pieces)
Connectors, male, vertical/horizontal							
	2	14 12 021	.	00	.	. . .	100
	3	14 12 031	.	00	.	. . .	100
	4	14 12 041	.	00	.	. . .	75
	5	14 12 051	.	00	.	. . .	75
	6	14 12 061	.	00	.	. . .	50
	7	14 12 071	.	00	.	. . .	50
	8	14 12 081	.	00	.	. . .	50
	9	14 12 091	.	00	.	. . .	50
	10	14 12 101	.	00	.	. . .	50
	11	14 12 111	.	00	.	. . .	50
	12	14 12 121	.	00	.	. . .	50
	13	14 12 131	.	00	.	. . .	50
	14	14 12 141	.	00	.	. . .	50
	15	14 12 151	.	00	.	. . .	50
	16	14 12 161	.	00	.	. . .	50
	17	14 12 171	.	00	.	. . .	50
	18	14 12 181	.	00	.	. . .	50
	19	14 12 191	.	00	.	. . .	50
	20	14 12 201	.	00	.	. . .	50
	21	14 12 211	.	00	.	. . .	25
	22	14 12 221	.	00	.	. . .	25
	23	14 12 231	.	00	.	. . .	25
	24	14 12 241	.	00	.	. . .	25
	25	14 12 251	.	00	.	. . .	25

Please insert digit for

pitch 3.50 mm ▶ 4

pitch 3.81 mm ▶ 5

vertical ▶ 1

horizontal ▶ 2

333 000 for samples for a packaging unit

PCB connectors male,
vertical/horizontal
for reflow soldering
pitch 3.50 / 3.81 mm

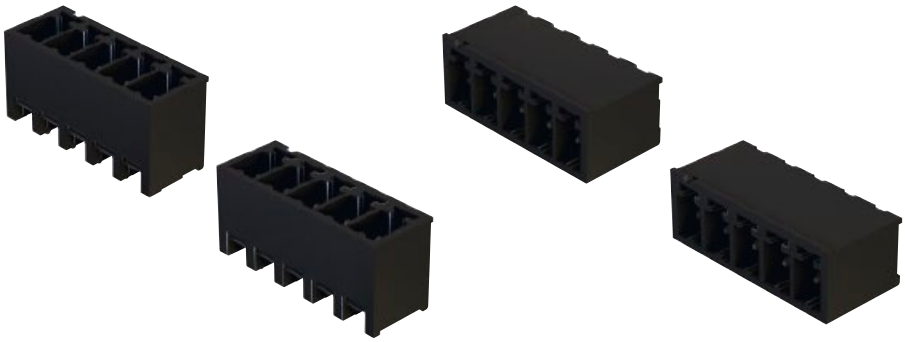

Drawing

Dimensions in mm

Dimensions

vertical

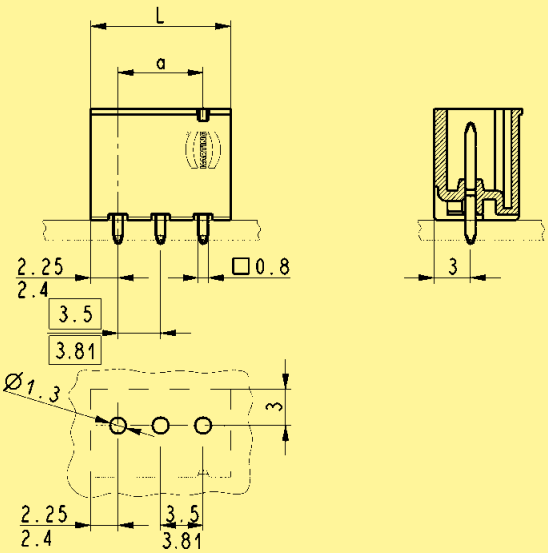

L = (pitch x poles) + 1
a = pitch x (poles - 1)

horizontal

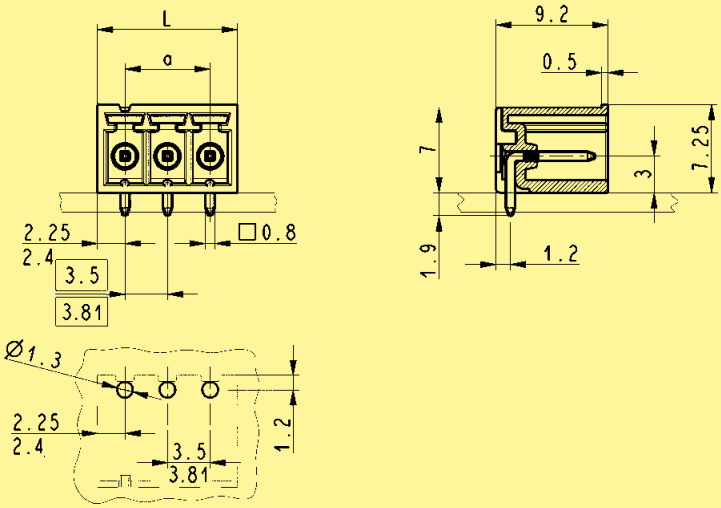

L = (pitch x poles) + 1
a = pitch x (poles - 1)

Technical characteristics

Technical data

Rated current	11 A
Pitch	3.50 mm / 3.81 mm

Surge voltage category / pollution degree	III/3	III/2	II/2
Rated voltage	150 V	150 V	300 V
Rated surge voltage	2.5 kV	2.5 kV	2.5 kV

Solder pin data

Solder pin: drilled hole diameter	1.2 mm

Material data

Group of insulation material	I
Type of insulation material	PA / PPA
Flammability rating per UL 94	V0
Operating temperature	-40 °C … +110 °C
Contact material	copper alloy
Contact plating	tin plated

PCB terminal blocks,
vertical with push-in-spring-cage termination
for wave soldering
pitch 5.00 mm

Identification	No. of contacts	Part No.		Packaging unit (pieces)
PCB terminal blocks, vertical with push-in-spring-cage termination				
	2	14 03 021 6101	. . .	300
	3	14 03 031 6101	. . .	200
	4	14 03 041 6101	. . .	150
	5	14 03 051 6101	. . .	150
	6	14 03 061 6101	. . .	100
	7	14 03 071 6101	. . .	100
	8	14 03 081 6101	. . .	100
	9	14 03 091 6101	. . .	100
	10	14 03 101 6101	. . .	100
	11	14 03 111 6101	. . .	100
	12	14 03 121 6101	. . .	100
	13	14 03 131 6101	. . .	50
	14	14 03 141 6101	. . .	50
	15	14 03 151 6101	. . .	50
	16	14 03 161 6101	. . .	50
	17	14 03 171 6101	. . .	50
	18	14 03 181 6101	. . .	50

333 for samples
000 for a packaging unit

PCB terminal blocks,
vertical with push-in-spring-cage termination
for wave soldering
pitch 5.00 mm

Drawing

Dimensions in mm

Dimensions

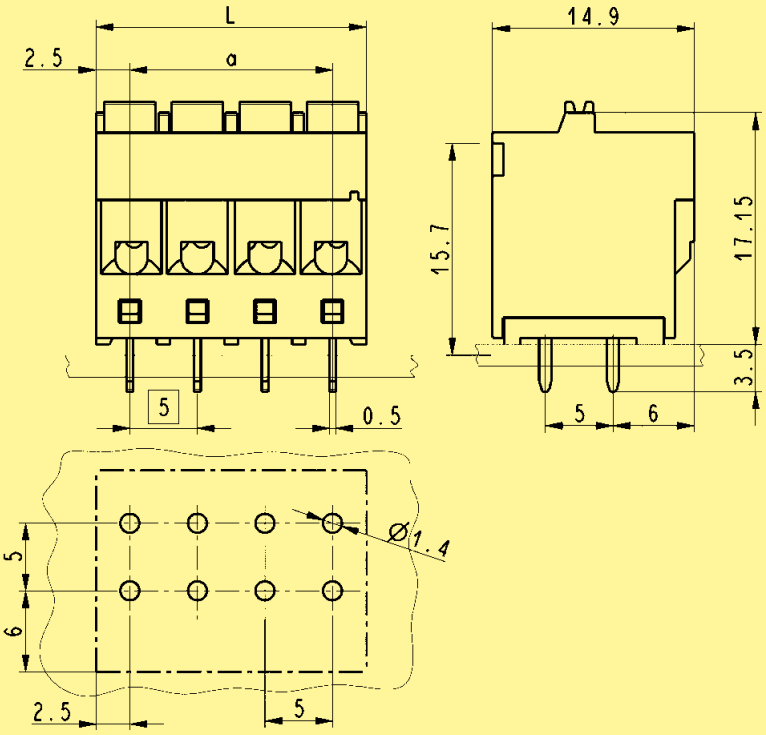

L = pitch x poles
a = pitch x (poles - 1)

Technical characteristics

Technical data

Rated current	12 A
Pitch	5.00 mm

Surge voltage category / pollution degree	III/3	III/2	II/2
Rated voltage	300 V	300 V	600 V
Rated surge voltage	4 kV	4 kV	4 kV

Conductor and solder pin data

Connection technology wire	push-in-spring-cage termination
Conductor size solid / stranded	0.2 - 2.5 / 0.2 - 2.5 mm²
Conductor size AWG	30 - 12
Stripping length	10 mm
Solder pin: drilled hole diameter	1.4 mm

Material data

Group of insulation material	I
Type of insulation material	PA
Flammability rating per UL 94	V0
Operating temperature	-40 °C … +110 °C
Contact material	copper alloy
Contact plating	tin plated

PCB terminal blocks,
horizontal with screw termination
for reflow soldering
pitch 5.00 mm

Identification	No. of contacts	Part No.		Packaging unit (pieces)
PCB terminal blocks, horizontal with screw termination				
for wire gauge 2.5 mm²	2	14 02 021 6404	. . .	100
	3	14 02 031 6404	. . .	100
	4	14 02 041 6404	. . .	75
	5	14 02 051 6404	. . .	75
	6	14 02 061 6404	. . .	50
	7	14 02 071 6404	. . .	50
	8	14 02 081 6404	. . .	50

333
000 for samples
for a packaging unit

PCB terminal blocks,
horizontal with screw termination
for reflow soldering
pitch 5.00 mm

Drawing

Dimensions in mm

Dimensions

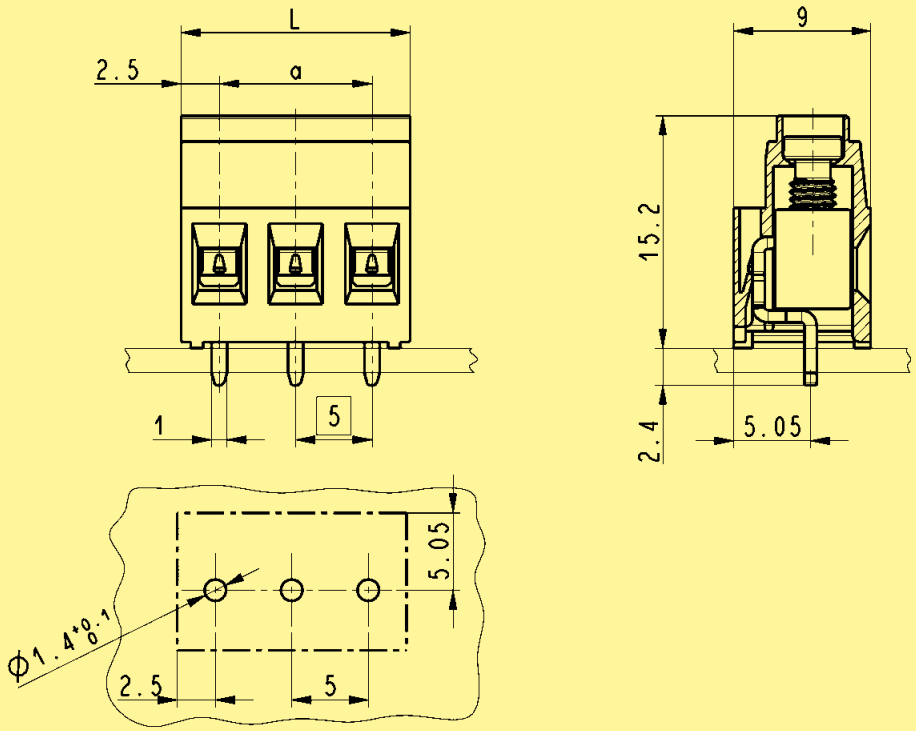

L = pitch x poles
a = pitch x (poles - 1)

Technical characteristics

Technical data

Rated current	17.5 A
Pitch	5.00 mm

Surge voltage category / pollution degree	III/3	III/2	II/2
Rated voltage	300 V	300 V	600 V
Rated surge voltage	4 kV	4 kV	4 kV

Material data

Group of insulation material	I
Type of insulation material	PA / PPA
Flammability rating per UL 94	V0
Operating temperature	-40 °C … +110 °C
Contact material	copper alloy
Contact plating	tin plated

Conductor and solder pin data

Connection technology wire	screw termination
Conductor size solid / stranded	0.05 - 2.5 / 0.05 - 2.5 mm²
Conductor size AWG	30 - 12
Screw thread	M3
Tightening torque	0.5 - 0.6 Nm
Stripping length	5.5 - 6.5 mm
Solder pin: drilled hole diameter	1.4 mm

PCB terminal blocks,
horizontal with screw termination
for reflow soldering
pitch 5.00 mm

Identification	No. of contacts	Part No.		Packaging unit (pieces)
PCB terminal blocks, horizontal with screw termination				
for wire gauge 1.5 mm²	2	14 02 021 6402	. . .	100
	3	14 03 031 6402	. . .	100
	4	14 03 041 6402	. . .	75
	5	14 03 051 6402	. . .	75
	6	14 03 061 6402	. . .	50
	7	14 03 071 6402	. . .	50
	8	14 03 081 6402	. . .	50
	9	14 03 091 6402	. . .	50
	10	14 03 101 6402	. . .	50
	11	14 03 111 6402	. . .	50
	12	14 03 121 6402	. . .	50

333 for samples
000 for a packaging unit

PCB terminal blocks,
horizontal with screw termination
for reflow soldering
pitch 5.00 mm

Drawing

Dimensions in mm

Dimensions

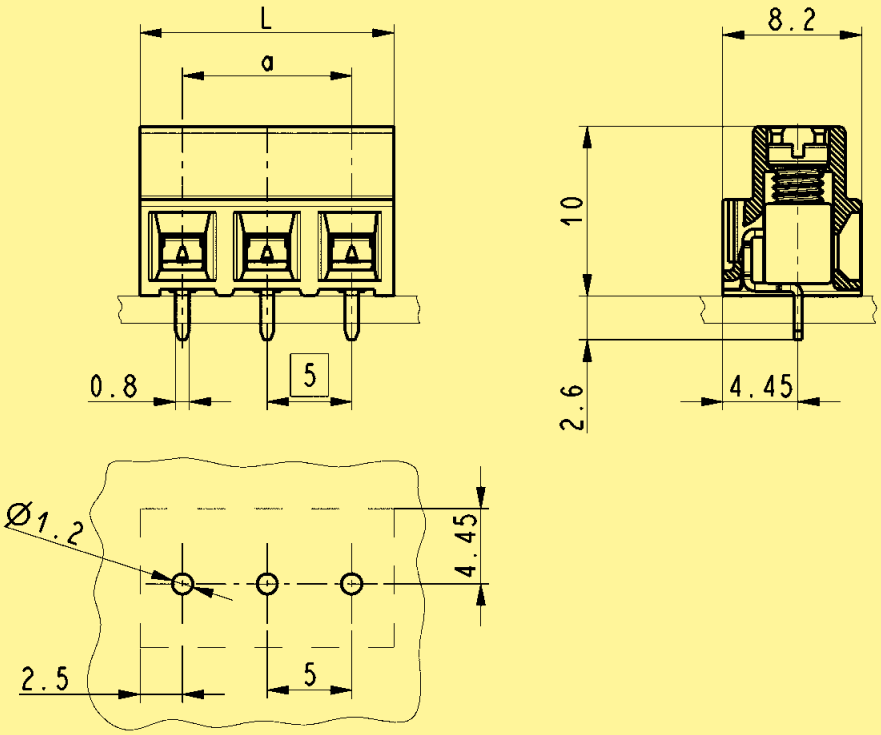

L = pitch x poles
a = pitch x (poles - 1)

Technical characteristics

Technical data

Rated current	13.5 A
Pitch	5.00 mm

Surge voltage category / pollution degree	III/3	III/2	II/2
Rated voltage	220 V	300 V	600 V
Rated surge voltage	4 kV	4 kV	4 kV

Conductor and solder pin data

Connection technology wire	screw termination
Conductor size solid / stranded	0.05 - 1.5 / 0.05 - 1.5 mm²
Conductor size AWG	30 - 16
Screw thread	M3
Tightening torque	0.5 - 0.6 Nm
Stripping length	5.0 - 6.0 mm
Solder pin: drilled hole diameter	1.1 mm

Material data

Group of insulation material	I
Type of insulation material	PA / PPA
Flammability rating per UL 94	V0
Operating temperature	-40 °C … +110 °C
Contact material	copper alloy
Contact plating	tin plated

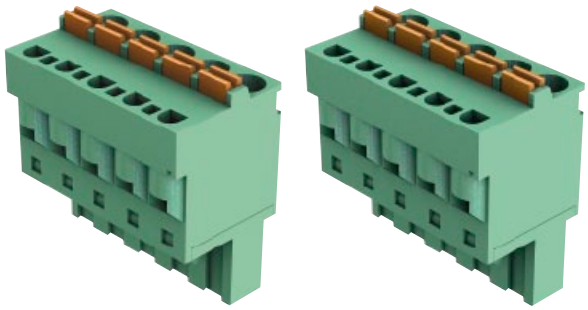

PCB connectors female,
horizontal
with push-in-spring-cage termination
pitch 5.00 / 5.08 mm

Identification	No. of contacts	Part No.				Packaging unit (pieces)
PCB connectors female, horizontal with push-in-spring-cage termination						
	2	14 31 021	.	102	. . .	300
	3	14 31 031	.	102	. . .	200
	4	14 31 041	.	102	. . .	150
	5	14 31 051	.	102	. . .	150
	6	14 31 061	.	102	. . .	100
	7	14 31 071	.	102	. . .	100
	8	14 31 081	.	102	. . .	100
	9	14 31 091	.	102	. . .	100
	10	14 31 101	.	102	. . .	100
	11	14 31 111	.	102	. . .	100
	12	14 31 121	.	102	. . .	100
	13	14 31 131	.	102	. . .	50
	14	14 31 141	.	102	. . .	50
	15	14 31 151	.	102	. . .	50
	16	14 31 161	.	102	. . .	50
	17	14 31 171	.	102	. . .	50
	18	14 31 181	.	102	. . .	50

Please insert digit for

pitch 5.00 mm ▶ 6

pitch 5.08 mm ▶ 7

333 000 for samples
for a packaging unit

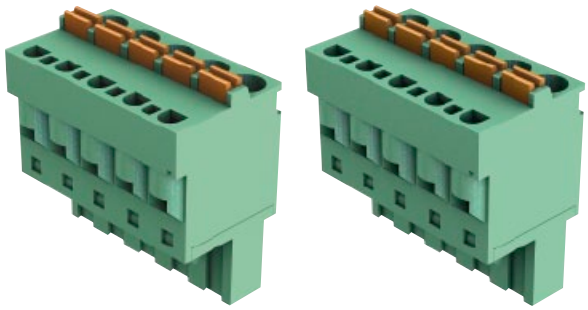

PCB connectors female,
horizontal
with push-in-spring-cage termination
pitch 5.00 / 5.08 mm

Drawing

Dimensions in mm

Dimensions

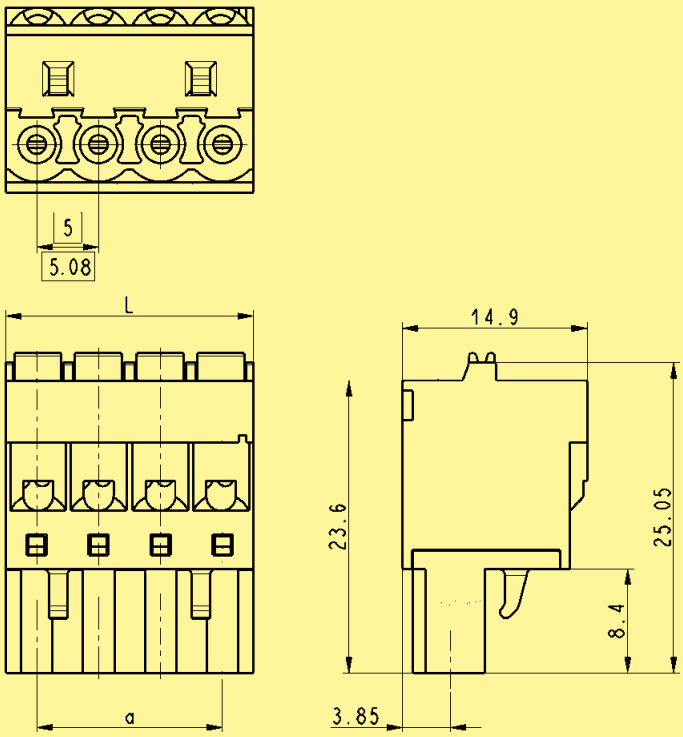

L = pitch x poles
a = pitch x (poles - 1)

Technical characteristics

Technical data

Rated current	12 A
Pitch	5.00 mm / 5.08 mm

Surge voltage category / pollution degree	III/3	III/2	II/2
Rated voltage	250 V	300 V	600 V
Rated surge voltage	4 kV	4 kV	4 kV

Conductor data

Connection technology wire	push-in-spring-cage termination
Conductor size solid / stranded	0.2 - 2.5 / 0.2 - 2.5 mm²
Conductor size AWG	30 - 12
Stripping length	10 mm

Material data

Group of insulation material	I
Type of insulation material	PA / PPA
Flammability rating per UL 94	V0
Operating temperature	-40 °C … +110 °C
Contact material	copper alloy
Contact plating	tin plated

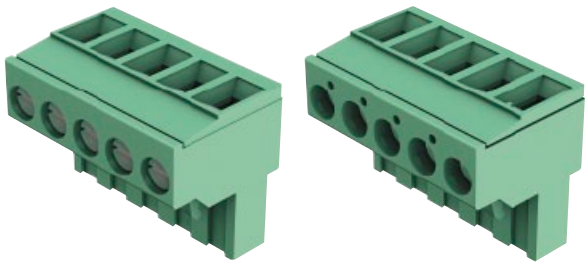

PCB connectors female,
horizontal
with screw termination
pitch 5.00 / 5.08 mm

Identification	No. of contacts	Part No.				Packaging unit (pieces)
PCB connectors female, horizontal with screw termination						
	2	14 31 021	.	402	. . .	300
	3	14 31 031	.	402	. . .	200
	4	14 31 041	.	402	. . .	150
	5	14 31 051	.	402	. . .	150
	6	14 31 061	.	402	. . .	100
	7	14 31 071	.	402	. . .	100
	8	14 31 081	.	402	. . .	100
	9	14 31 091	.	402	. . .	100
	10	14 31 101	.	402	. . .	100
	11	14 31 111	.	402	. . .	100
	12	14 31 121	.	402	. . .	100
	13	14 31 131	.	402	. . .	50
	14	14 31 141	.	402	. . .	50
	15	14 31 151	.	402	. . .	50
	16	14 31 161	.	402	. . .	50
	17	14 31 171	.	402	. . .	50
	18	14 31 181	.	402	. . .	50
	19	14 31 191	.	402	. . .	50
	20	14 31 201	.	402	. . .	50
	21	14 31 211	.	402	. . .	25
	22	14 31 221	.	402	. . .	25
	23	14 31 231	.	402	. . .	25
	24	14 31 241	.	402	. . .	25
	25	14 31 251	.	402	. . .	25

Please insert digit for

pitch 5.00 mm ▶ 6

pitch 5.08 mm ▶ 7

333
000 for samples
for a packaging unit

PCB connectors female,
horizontal
with screw termination
pitch 5.00 / 5.08 mm

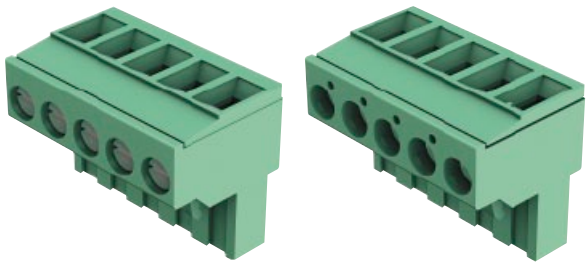

Drawing

Dimensions in mm

Dimensions

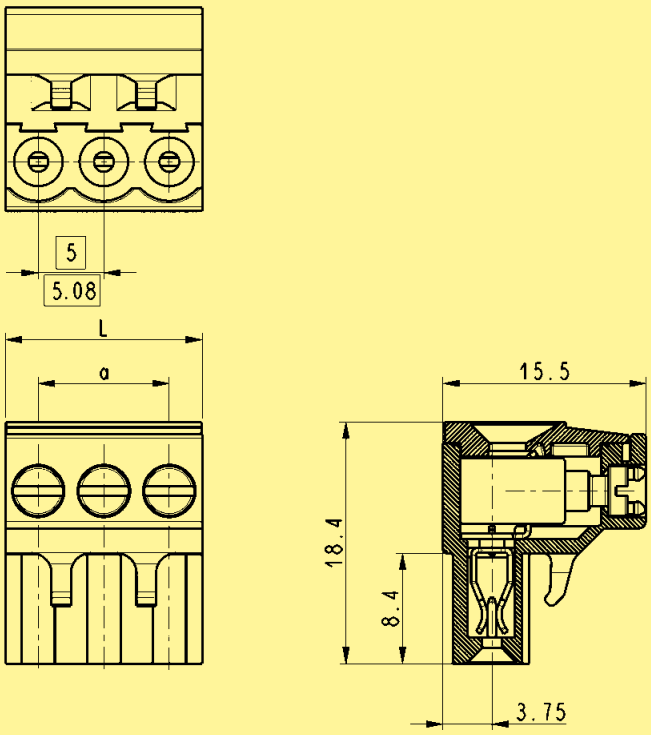

L = pitch x poles
a = pitch x (poles - 1)

Technical characteristics

Technical data

Rated current	15 A
Pitch	5.00 mm / 5.08 mm

Surge voltage category / pollution degree	III/3	III/2	II/2
Rated voltage	250 V	300 V	600 V
Rated surge voltage	4 kV	4 kV	4 kV

Conductor data

Connection technology wire	screw termination
Conductor size solid / stranded	0.05 - 2.5 / 0.05 - 2.5 mm²
Conductor size AWG	30 - 12
Screw thread	M3
Tightening torque	0.5 - 0.6 Nm
Stripping length	6.0 - 7.5 mm

Material data

Group of insulation material	I
Type of insulation material	PA / PPA
Flammability rating per UL 94	V0
Operating temperature	-40 °C … +110 °C
Contact material	copper alloy
Contact plating	tin plated

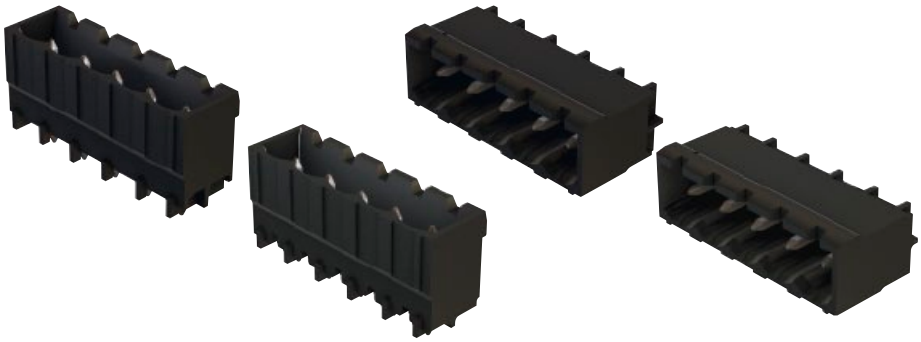

PCB connectors male,
vertical/horizontal
for reflow soldering
pitch 5.00 / 5.08 mm

Identification	No. of contacts	Part No.					Packaging unit (pieces)
PCB connectors male, vertical/horizontal							
	2	14 12 021	.	00	.	. . .	100
	3	14 12 031	.	00	.	. . .	100
	4	14 12 041	.	00	.	. . .	75
	5	14 12 051	.	00	.	. . .	75
	6	14 12 061	.	00	.	. . .	50
	7	14 12 071	.	00	.	. . .	50
	8	14 12 081	.	00	.	. . .	50
	9	14 12 091	.	00	.	. . .	50
	10	14 12 101	.	00	.	. . .	50
	11	14 12 111	.	00	.	. . .	50
	12	14 12 121	.	00	.	. . .	50
	13*	14 12 131	.	00	.	. . .	50
	14*	14 12 141	.	00	.	. . .	50
	15*	14 12 151	.	00	.	. . .	50
	16*	14 12 161	.	00	.	. . .	50
	17*	14 12 171	.	00	.	. . .	50
	18*	14 12 181	.	00	.	. . .	50
	19*	14 12 191	.	00	.	. . .	50

Please insert digit for

pitch 5.00 mm ▶ 6
pitch 5.08 mm ▶ 7

vertical ▶ 1
horizontal ▶ 2

* Only available in pitch 5.00 mm (horizontal)

333 000 for samples
for a packaging unit

PCB connectors male,
vertical/horizontal
for reflow soldering
pitch 5.00 / 5.08 mm

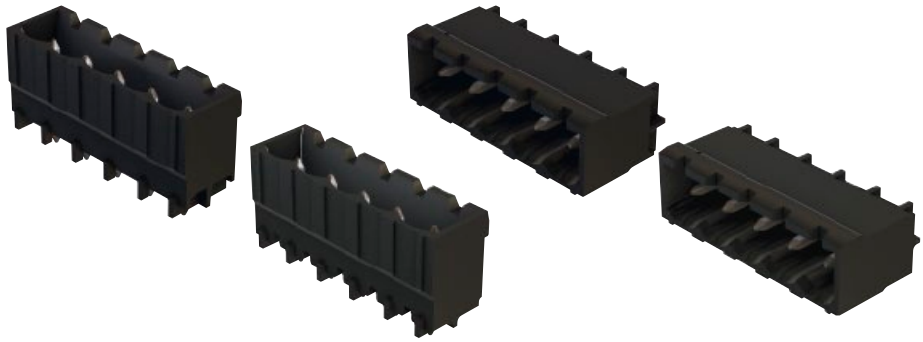

Drawing

Dimensions in mm

Dimensions

vertical

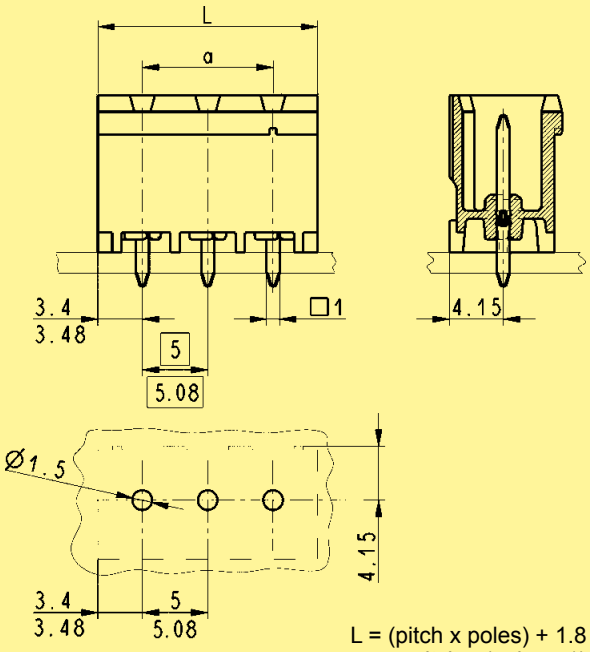

L = (pitch x poles) + 1.8
a = pitch x (poles - 1)

horizontal

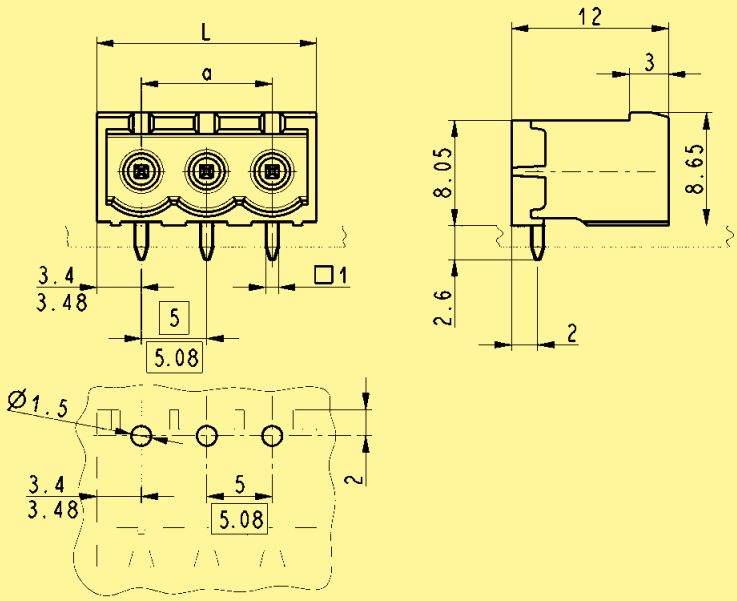

L = (pitch x poles) + 1.8
a = pitch x (poles - 1)

Technical characteristics

Technical data

Rated current	15 A
Pitch	5.00 mm / 5.08 mm

Surge voltage category / pollution degree	III/3	III/2	II/2
Rated voltage	250 V	300 V	600 V
Rated surge voltage	4 kV	4 kV	4 kV

Solder pin data

Solder pin: drilled hole diameter	1.4 mm

Material data

Group of insulation material	I
Type of insulation material	PA / PPA
Flammability rating per UL 94	V0
Operating temperature	-40 °C … +110 °C
Contact material	copper alloy
Contact plating	tin plated