User Manual

ADAM 4000 Series

Data Acquisition Modules

ADVANTECH
Enabling an Intelligent Planet

sales@prom-elec.com / ООО ПРОМЭЛЕКТРОНИКА

Copyright

The documentation and the software included with this product are copyrighted 2013 by Advantech Co., Ltd. All rights are reserved. Advantech Co., Ltd. reserves the right to make improvements in the products described in this manual at any time without notice. No part of this manual may be reproduced, copied, translated or transmitted in any form or by any means without the prior written permission of Advantech Co., Ltd. Information provided in this manual is intended to be accurate and reliable. However, Advantech Co., Ltd. assumes no responsibility for its use, nor for any infringements of the rights of third parties, which may result from its use.

Acknowledgements

ADAM is a trademark of Advantech Co., Ltd.

IBM and PC are trademarks of International Business Machines Corporation.

All other product names or trademarks are properties of their respective owners.

Product Warranty (2 years)

Advantech warrants to you, the original purchaser, that each of its products will be free from defects in materials and workmanship for two years from the date of purchase.

This warranty does not apply to any products which have been repaired or altered by persons other than repair personnel authorized by Advantech, or which have been subject to misuse, abuse, accident or improper installation. Advantech assumes no liability under the terms of this warranty as a consequence of such events.

Because of Advantech's high quality-control standards and rigorous testing, most of our customers never need to use our repair service. If an Advantech product is defective, it will be repaired or replaced at no charge during the warranty period. For out-of-warranty repairs, you will be billed according to the cost of replacement materials, service time and freight. Please consult your dealer for more details.

If you think you have a defective product, follow these steps:

1. Collect all the information about the problem encountered. (For example, CPU speed, Advantech products used, other hardware and software used, etc.) Note anything abnormal and list any onscreen messages you get when the problem occurs.
2. Call your dealer and describe the problem. Please have your manual, product, and any helpful information readily available.
3. If your product is diagnosed as defective, obtain an RMA (return merchandize authorization) number from your dealer. This allows us to process your return more quickly.
4. Carefully pack the defective product, a fully-completed Repair and Replacement Order Card and a photocopy proof of purchase date (such as your sales receipt) in a shippable container. A product returned without proof of the purchase date is not eligible for warranty service.
5. Write the RMA number visibly on the outside of the package and ship it prepaid to your dealer.

Part No. XXXXXXXXXX Edition 1

Printed in Taiwan November 2015

Declaration of Conformity

CE

The ADAM-4000 series developed by Advantech Co., Ltd. has passed the CE test for environmental specifications when operated within an industrial enclosure (ADAM-4950-ENC). Therefore, in order to protect the ADAM modules from being damaged by ESD (Electric Static Discharge), we strongly recommend that the use of CE-compliant industrial enclosure products when using any ADAM module.

Technical Support and Assistance

1. Visit the Advantech web site at www.advantech.com/support where you can find the latest information about the product.
2. Contact your distributor, sales representative, or Advantech's customer service center for technical support if you need additional assistance. Please have the following information ready before you call:
   - Product name and serial number
   - Description of your peripheral attachments
   - Description of your software (operating system, version, application software, etc.)
   - A complete description of the problem
   - The exact wording of any error messages

Contents

Chapter 1 Introduction.....1

1.1 Overview 2
1.2 Applications 3

Chapter 2 Installation Guideline 5

2.1 System Requirements to Set up an ADAM Network 6
Figure 2.1 Power Supply Connections 7
2.2 Basic Configuration and Hook-up 9
Figure 2.2 Basic Hook-up of ADAM Module to Host Switches 9
2.3 Baud Rate and Checksum 11
Figure 2.3 Grounding the INIT* Terminal..... 12
Figure 2.4 Set INIT switch to “Init” 12
2.4 Multiple Module Hookup..... 13
Figure 2.5 Multi-module Connection..... 13
2.5 Programming Example..... 14

Chapter 3 I/O Modules 21

3.1 The Common Specification of ADAM-4000 I/O Series 22
3.2 ADAM-4011/4011D Thermocouple Input Modules 22
3.2.1 ADAM-4011D Thermocouple Input Module 25
Figure 3.1 ADAM-4011 Thermocouple Input Module 25
3.2.2 ADAM-4011D Thermocouple Input Module 26
Figure 3.2 ADAM-4011D Thermocouple Input Module with LED Display..... 26
3.2.3 Application Wiring 27
Figure 3.3 ADAM-4011/4011D Thermocouple Input Wiring Diagram 27
Figure 3.4 ADAM-4011/4011D Millivolt and Volt Input Wiring Diagram 27
Figure 3.5 ADAM-4011/4011D Process Current Input Wiring Diagram 27
Figure 3.6 ADAM-4011/4011D Digital Output Wiring Diagram Used with SSR (HI-LO alarm) 28
Figure 3.7 ADAM-4011/4011D Digital Input Wiring Diagram Used with TTL..... 28
Figure 3.8 ADAM-4011/4011D Digital Input Wiring Diagram Used with Dry contact..... 28
3.3 ADAM-4012 Analog Input Module..... 29
3.3.1 ADAM-4012 Analog Input Module 30
Figure 3.9 ADAM-4012 Analog Input Module 30
3.3.2 Application Wiring 31
Figure 3.10 ADAM-4012 Millivolt and Volt Input Wiring Diagram 31
Figure 3.11 ADAM-4012 Process Current Input Wiring Diagram 31
Figure 3.12 ADAM-4012 Digital Output Wiring Diagram Used with SSR (HI-LO alarm) 31
Figure 3.13 ADAM-4012 Digital Input Wiring Diagram Used with TTL 32
Figure 3.14 ADAM-4012 Digital Input Wiring Diagram Used with Dry contact 32
3.4 ADAM-4013 RTD Module 33
Figure 3.15 ADAM-4013 RTD Input Module..... 33

3.4.1 Application Wiring 34
Figure 3.16 ADAM-4013 RTD Inputs Wiring Diagram 34
3.5 ADAM-4015 6-channel RTD Input Module 35
Figure 3.17 ADAM-4015 6-channel RTD Input Module 35
3.5.1 Application Wiring 36
Figure 3.18 ADAM-4015 RTD Input Module Wiring Diagram 36
3.5.2 Technical specification of ADAM-4015 37
Table 3.1: Technical Specification of ADAM-4015 37
3.6 ADAM-4015T 6-channel Thermistor Input Module 38
Figure 3.19 ADAM-4015T 6-channel Thermistor Input Module ... 38
3.6.1 Application Wiring 38
Figure 3.20 ADAM-4015T Thermistor Input Module Wiring Diagram 38
3.6.2 Technical Specification of ADAM-4015T 39
Table 3.2: Technical Specification of ADAM-4015T 39
3.7 ADAM-4016 Analog Input/Output Module 40
Figure 3.21 ADAM-4016 Analog Input/Output Module 41
3.7.1 Application Wiring 42
Figure 3.22 ADAM-4016 Strain Gauge Voltage Input Wiring Diagram 42
Figure 3.23 ADAM-4016 Strain Gauge Current Input Wiring Diagram 42
Figure 3.24 ADAM-4016 Digital Output Wiring Diagram Used with SSR 42
3.8 ADAM-4017/4017+/4018/4018M/4018+ 8-channel Analog Input Modules. 43
3.8.1 ADAM-4017/4018 8-channel Analog Input Module 43
3.8.2 ADAM-4018M 8-channel Analog Input Data logger 43
3.8.3 ADAM-4017+ 8-channel Differential Analog Input Module 43
3.8.4 ADAM-4018+ 8-channel Thermocouple Input Module 44
3.8.5 ADAM-4017 8-channel Analog Input Module 44
Figure 3.25 ADAM-4017 8-channel Analog Input Module 44
3.8.6 ADAM-4017+ 8-channel Differential Analog Input Module 45
Figure 3.26 ADAM-4017+ 8-ch. differential analog input module 45
Table 3.3: Technical Specification of ADAM-4017+ 46
3.8.7 ADAM-4018 8-channel Analog Input Module 46
Figure 3.27 ADAM-4018 8-channel Thermocouple Input Module 46
3.8.8 ADAM-4018M 8-channel Analog Input Data logger 47
Figure 3.28 ADAM-4018M 8-channel Analog Input Data Logger 47
3.8.9 ADAM-4018+ 8-channel Thermocouple Input Module 48
Figure 3.29 ADAM-4018+ 8-ch. thermocouple input module 48
Table 3.4: Technical specification of ADAM-4018+ 49
3.8.10 Application Wiring 49
Figure 3.30 Current Input Wiring Diagram of ADAM-4017 49
Figure 3.31 ADAM-4017 Differential Input Wiring Diagram (Ch0 ~ Ch5) 49
Figure 3.32 ADAM-4017 Single-ended Input Wiring Diagram (Ch6 and Ch7) 50
Figure 3.33 ADAM-4017+ Voltage and Current Input Wiring Diagram 50
Figure 3.34 ADAM-4018+ Thermocouple Input Wiring Diagram . 51
3.9 ADAM-4019+ 8-channel Universal Analog Input Module 51
Figure 3.35 ADAM-4019+ 8-channel Universal Analog Input 51
3.9.1 Application Wiring 52
Figure 3.36 ADAM-4019+ Universal Analog Input Wiring Diagram. 52
3.9.2 Technical Specification of ADAM-4019+ 53
Table 3.5: Technical Specification of ADAM-4019+ 53
3.10 ADAM-4021 Analog Output Module 53
Figure 3.37 ADAM -4021 Analog Output Module 54

3.10.1 Application Wiring 55
Figure 3.38 ADAM-4021 Analog Output Wiring Diagram 55
3.11 ADAM-4024 4-channel Analog Output Module 55
Figure 3.39 ADAM-4024 4-channel Analog Output Module 55
3.11.1 Technical specification of ADAM-4024 56
3.11.2 Application Wiring 56
Figure 3.40 ADAM-4024 Pin Define and Wiring Diagram..... 57
3.12 ADAM-4050 Digital I/O Module 57
Figure 3.41 ADAM-4050 Digital I/O Module 58
3.12.1 Application Wiring 59
Figure 3.42 ADAM-4050 TTL Input Wiring Diagram..... 59
Figure 3.43 ADAM-4050 Contact Closure Input Wiring Diagram 59
Figure 3.44 ADAM-4050 Digital Output Wiring Diagram Used with SSR 59
3.13 ADAM-4051 16-channel Isolated Digital Input Module 60
Figure 3.45 ADAM-4051 16-channel Isolated Digital Input Module. 60
3.13.1 Application Wiring 61
Figure 3.46 ADAM-4051 Dry Contact Wiring Diagram 61
Figure 3.47 ADAM-4051 Wet Contact Wiring Diagram 61
3.14 ADAM-4052 Isolated Digital Input Module 62
Figure 3.48 ADAM-4052 Isolated Digital Input Module..... 62
3.14.1 Application Wiring 63
Figure 3.49 ADAM-4052 Isolation Digital Input Wiring Ground ... 63
3.15 ADAM-4053 16-channel Digital Input Module 63
Figure 3.50 ADAM-4053 16-channel Digital Input Module 63
3.15.1 Application Wiring 65
Figure 3.51 ADAM-4053 Wet Contact Input Wiring Diagram 65
Figure 3.52 ADAM-4053 Contact Closure Input Wiring Diagram 65
3.16 ADAM-4055 16-channel Isolated Digital I/O Module..... 66
Figure 3.53 ADAM-4055 16-channel Digital I/O Module..... 66
3.16.1 Application Wiring: 67
Figure 3.54 ADAM-4055 Digital Output Wiring Diagram 67
Figure 3.55 ADAM-4055 Digital Input Dry Contact Wiring Diagram 67
Figure 3.56 ADAM-4055 Digital Input Dry Contact Diagram (Internal)..... 68
Figure 3.57 ADAM-4055 Digital Input Wet Contact Wiring Diagram 68
Figure 3.58 ADAM-4055 Digital Input Wet Contact Diagram (Internal)..... 69
Figure 3.59 ADAM-4055 Default Jumper Setting for the Digital Input Wiring 69
Figure 3.60 ADAM-4055 Default Jumper Setting for the Digital Input Wiring 70
3.17 ADAM-4056S 12-channel Sink Type Isolated Digital Output Module 71
Figure 3.61 ADAM-4056S 12-channel Sink Type Isolated Digital Output Module 71
3.17.1 Technical Specification of ADAM-4056S 71
3.17.2 Application Wiring 72
Figure 3.62 ADAM-4056S Digital Output Wiring Diagram 72
3.18 ADAM-4056SO 12-channel Source Type Isolated Digital Output Module .. 72
Figure 3.63 ADAM-4056SO 12-channel Source Type Isolated Digital Output Module 73
3.18.1 Technical Specification of ADAM-4056SO 73
3.18.2 Application Wiring 74
Figure 3.64 ADAM-4056SO Digital Output Wiring Diagram 74
3.19 ADAM-4060/4068 Relay Output Module..... 74
3.19.1 ADAM-4060 4-channel Relay Output Module..... 75

Figure 3.65 ADAM-4060 4-channel Relay Output Module 75
3.19.2 ADAM-4068 8-channel Relay Output Module 76
Figure 3.66 ADAM-4068 8-channel Relay Output Module 76
3.19.3 Application Wiring 77
Figure 3.67 ADAM-4060 Form A Relay Output Wiring Diagram . 77
Figure 3.68 ADAM-4060 Form C Relay Output Wiring Diagram . 77
Figure 3.69 ADAM-4068 Form C Relay Output Wiring Diagram . 77
Figure 3.70 ADAM-4068 Form A relay output Wiring Diagram ... 78
3.20 ADAM-4069 8-channel Relay Output Module 78
Figure 3.71 ADAM-4069 Relay Output Module 78
3.20.1 Specification 79
3.20.2 Wiring 79
Figure 3.72 ADAM-4069 Form C Relay Output 79
Figure 3.73 ADAM-4069 Form A Relay Output 79
3.21 ADAM-4080/4080D Counter/Frequency Input Modules 80
3.21.1 ADAM-4080 Counter/Frequency Input Modules 81
Figure 3.74 ADAM-4080 Counter/Frequency Input Module 81
3.21.2 ADAM-4080D Counter/Frequency Input Modules with LED Display 82
Figure 3.75 ADAM-4080D Counter/Frequency Input Module with LED Display 82
3.21.3 Application Wiring 83
Figure 3.76 ADAM-4080/4080D Non-isolated Input 83
Figure 3.77 ADAM-4080/4080D Photo-isolated Input 83

Chapter 4 Command Set 85

4.1 Introduction 86
4.2 Syntax 86
4.3 I/O Module Commands Search Table 87
Table 4.1: ADAM-4011 Command Table 87
Table 4.2: ADAM-4011D Command Table 88
Table 4.3: ADAM-4012 Command Table 89
Table 4.4: ADAM-4013 Command Table 90
Table 4.5: ADAM-4015/ADAM-4015T Command Table 90
Table 4.6: ADAM-4016 Command Table 91
Table 4.7: ADAM-4017 Command Table 93
Table 4.8: ADAM-4017+ Command Table 93
Table 4.9: ADAM-4017+ Input range and external calibrating input source for each input type 94
Table 4.10: ADAM-4018 Command Table 95
Table 4.11: ADAM-4018+ Command Table 96
Table 4.12: ADAM-4018+ Input range and external calibrating input source for each input type 97
Table 4.13: ADAM-4018M Command Table 97
Table 4.14: ADAM-4019+ Command Table 99
Table 4.15: ADAM-4021 Command Table 100
Table 4.16: ADAM-4024 Command Table 101
Table 4.17: ADAM-4050 Command Table 102
Table 4.18: ADAM-4051 Command Table 103
Table 4.19: ADAM-4052 Command Table 104
Table 4.20: ADAM-4053 Command Table 104
Table 4.21: ADAM-4055 Command Table 105
Table 4.22: ADAM-4056S Command Table 106
Table 4.23: ADAM-4056SO Command Table 107
Table 4.24: ADAM-4060/4068 Command Table 108
Table 4.25: ADAM-4069 Command Table 109
Table 4.26: ADAM-4080 Command Table 109
Table 4.27: ADAM-4080D Command Table 111

Chapter 5 Analog Input Module Command Set.....115

5.1 Analog Input Common Command Set 116
5.1.1 %AANNTTCCFF 117
Figure 5.1 Data format for FF (8-bit parameter) 118
Table 5.1: Input Range Codes (Type Codes) 119
Table 5.2: ADAM-4015/4015T command codes against Input ranges table 120
Table 5.3: Baud Rate Codes 121
5.1.2 $AA2 121
5.1.3 $AAF 122
5.1.4 $AAM 123
5.1.5 #AA 124
5.1.6 #AAN 126
5.1.7 $AA5VV 127
5.1.8 $AA6 128
5.1.9 $AA0 129
5.1.10 $AA1 130
5.1.11 #** 131
5.1.12 $AA4 131
5.1.13 $AAB 133
5.1.14 $AA3 134
5.1.15 $AA9SNNNN 135
5.1.16 $AA0Ci 136
5.1.17 $AA1Ci 137
5.1.18 $AA7CiRrr 138
5.1.19 $AA8Ci 139
5.1.20 $AAXnnnn 140
5.1.21 $AAY 141
5.1.22 $AAS0 142
5.1.23 $AAS1 142
5.2 Analog Input Data Logger Command Set 143
5.2.1 @AACCCSDMTTTT 143
5.2.2 @AAD 145
5.2.3 @AAD 146
5.2.4 @AASO 147
5.2.5 @AAT 148
5.2.6 @AAL 149
5.2.7 @AAN 150
5.2.8 @AARNNNN 151
5.2.9 @AAACSDHHHHTEIIII 152
5.2.10 @AABC 153
5.3 Digital I/O, Alarm and Event Command Set 154
5.3.1 @AADI 155
5.3.2 @AADO 157
5.3.3 @AAEAT 158
5.3.4 @AAHI 159
5.3.5 @AALO 160
5.3.6 @AADA 161
5.3.7 @AACA 162
5.3.8 @AARH 163
5.3.9 @AARL 164
5.3.10 @AARE 165
5.3.11 @AACE 166
5.4 Excitation Voltage Output Command Set 166
5.4.1 $AA6 167
5.4.2 $AA7 168
5.4.3 $AAS 169

5.4.4 $AAE 170
5.4.5 $AAA 171
5.4.6 $AAB 172

Chapter 6 Analog Output Module Command Set 173

6.1 Analog Output Module Command for ADAM-4021 174
6.1.1 %AANNTTCCFF 175
Figure 6.1 Data format for FF (8-bit parameter) 175
Table 6.1: Baud Rate Codes 176
Table 6.2: Output Range Codes (Type Codes) 176
6.1.2 #AA 177
6.1.3 $AA4 178
6.1.4 $AA3 179
6.1.5 $AA0 180
6.1.6 $AA2 181
6.1.7 $AA6 182
6.1.8 $AA8 183
6.1.9 $AA5 184
6.1.10 $AAF 185
6.1.11 $AAM 186
6.2 Analog Output Module Command for ADAM-4024 187
Table 6.3: ADAM-4024 Command Review: 187

Chapter 7 Digital I/O, Relay ouput and Counter/ Frequency Command Set 191

7.1 Digital I/O and Relay Output Module Command 192
7.1.1 %AANNTTCCFF 194
Figure 7.1 Data format for FF (8-bit parameter) 194
Table 7.1: Baud Rate Codes 195
7.1.2 $AA6 196
7.1.3 #AABB 198
7.1.4 #** 200
7.1.5 $AA4 200
7.1.6 $AA2 202
Table 7.2: Baud Rate Codes 203
Figure 7.2 Data format for FF (8-bit parameter) 203
7.1.7 $AA5 204
7.1.8 $AAF 205
7.1.9 $AAM 206
7.1.10 $AAX0TTTTDD 207
7.1.11 $AAX1 208
7.1.12 $AAX2 209
7.1.13 $AAE0 209
7.1.14 $AAP 210
7.1.15 AAS 211
7.1.16 $AAXnnnn 212
7.1.17 $AAY 213
7.2 Counter/Frequency Module Command 214
7.2.1 Configuration, Counter Input and Display Command Set 214
Figure 7.3 Data format for FF (8-bit parameter) 215
Table 7.3: Baud Rate Codes 216
7.2.2 Counter Setup Command Set 225
7.2.3 Digital Filter and Programmable Threshold Command Set 234
7.2.4 Digital Output and Alarm Command Set 245

Chapter 8 Calibration 263

8.1 Analog Input Module Calibration 264
Figure 8.1 Applying Calibration Voltage 264
Figure 8.2 Zero Calibration 265
Figure 8.3 Span Calibration 265
Figure 8.4 Cold Junction Calibration..... 266
8.2 Analog Input Resistance Calibration 266
Figure 8.5 Applying calibration resistance 267
Table 8.1: Calibration Resistance..... 268
8.3 Analog Input Thermistor module Calibration 268
8.4 Analog Output Calibration 275
Figure 8.6 Setup for Analog Output Calibration..... 275
Figure 8.7 Setup for Voltage Output Calibration..... 276
Figure 8.8 Zero Calibration 276
Figure 8.9 Span Calibration 277

Appendix A Technical Specifications.....279

A.1 ADAM-4011 Thermocouple Input Module..... 280
Table A.1: ADAM-4011 Specifications..... 280
Table A.2: ADAM-4011 Range Accuracy for Thermocouple ... 280
Figure A.1 ADAM-4011 Function Diagram..... 281
A.2 ADAM-4011D Thermocouple Input Module with LED Display 282
Table A.3: ADAM-4011D Specifications 282
Table A.4: ADAM-4011D Range Accuracy for Thermocouple. 283
Figure A.2 ADAM-4011D Function Diagram 284
A.3 ADAM-4012 Analog Input Module..... 285
Table A.5: ADAM-4012 Specifications..... 285
Figure A.3 ADAM-4012 Function Diagram..... 286
A.4 ADAM-4013 RTD Input Module 287
Table A.6: ADAM-4013 Specifications..... 287
Figure A.4 ADAM-4013 Function Diagram..... 288
A.5 ADAM-4016 Analog Input/Output Module..... 289
Table A.7: ADAM-4016 Specifications..... 289
Figure A.5 ADAM-4016 Function Diagram..... 290
A.6 ADAM-4017/4017+ 8-channel Analog Input Module..... 291
Table A.8: ADAM-4017/4017+ Specifications..... 291
Figure A.6 ADAM-4017/4017+ Function Diagram..... 292
A.7 ADAM-4018/4018+ 8-channel Analog Input Module..... 293
Table A.9: ADAM-4018/4018+ Specifications..... 293
Table A.10:ADAM-4018/4018+ Range Accuracy for Thermocouple 294
Figure A.7 ADAM-4018/4018+ Function Diagram..... 295
A.8 ADAM-4018M 8-channel Analog Input Data Logger..... 296
Table A.11:ADAM-4018M Specifications..... 296
Table A.12:ADAM-4018M Range Accuracy for Thermocouple 297
Figure A.8 ADAM-4018M Function Diagram..... 298
A.9 ADAM-4019+ 8-channel Universal Analog Input Module..... 299
Table A.13:ADAM-4019+ Specifications..... 299
Figure A.9 ADAM-4019+ Function Diagram..... 300
A.10 ADAM-4021/4024 Analog Output Module..... 301
Table A.14:ADAM-4021/4024 Specifications..... 301
Figure A.10ADAM-4021 Function Diagram 302
Figure A.11ADAM-4024 Function Diagram 303
A.11 ADAM-4050 Digital I/O Module 304
Table A.15:ADAM-4050 Specifications..... 304
Figure A.12ADAM-4050 Function Diagram 304
A.12 ADAM-4051/4052 Isolated Digital Input Module 305

Table A.16:ADAM-4051/4502 Specifications 305
Figure A.13ADAM-4051/4052 Function Diagram 306
A.13 ADAM-4053 16-channel Digital Input Module 307
Table A.17:ADAM-4053 Specifications 307
Figure A.14ADAM-4053 Function Diagram 308
A.14 ADAM-4055 Isolated Digital Input/Output Module 309
Table A.18:ADAM-4055 Isolated Digital Input/Output Module.. 309
Figure A.15ADAM-4055 Function Diagram 310
A.15 ADAM-4056S 12-channel Sink Type Isolated Digital Output Module ... 311
Table A.19:ADAM-4056S Specifications 311
Figure A.16ADAM-4056S Function Diagram 312
A.16 ADAM-4056SO 12-channel Source Type Isolated Digital Output Module.. 313
Table A.20:ADAM-4056SO Specifications 313
Figure A.17ADAM-4056SO Function Diagram 314
A.17 ADAM-4060 Relay Output Module 315
Table A.21:ADAM-4060 Specifications 315
Figure A.18ADAM-4060 Function Diagram 316
A.18 ADAM-4068/4069 8-channel Relay Output Module 317
Table A.22:ADAM-4068/4069 Specifications 317
Figure A.19ADAM-4068/4069 Function Diagram 317
A.19 ADAM-4080 Counter/Frequency Input Module 318
Table A.23:ADAM-4080 Specifications 318
Figure A.20ADAM-4080 Function Diagram 319
A.20 ADAM-4080D Counter/Frequency Input Module with LED Display 320
Table A.24:ADAM-4080D Specifications 320
Figure A.21ADAM-4080D Function Diagram 321

Appendix B Data Formats and I/O Ranges 323

B.1 Analog Input Formats 324
B.1.1 Engineering Units 324
B.1.2 Percent of FSR 325
B.1.3 Twos complement hexadecimal 326
B.1.4 Ohms 327
B.2 Analog Input Ranges 328
B.3 Analog Output Formats 332
B.3.1 Engineering Units 332
B.3.2 Percent of Span 332
B.3.3 Hexadecimal 332
B.4 Analog Output Ranges 333

Appendix C Technical Diagrams 335

C.1 ADAM Dimensions 336
Figure C.1 ADAM Modules Dimensions 336
C.2 Installation 337
C.2.1 DIN-Rail Mounting 337
Figure C.2 DIN-Rail Adapter 337
Figure C.3 DIN-Rail Mounting 338
C.2.2 Panel Mounting 339
Figure C.4 Panel Mounting Bracket Dimensions 339
Figure C.5 Panel Mounting 339
C.2.3 Piggyback Stack 340
Figure C.6 Piggyback Stack 340

Appendix D Utility Software 341

D.1 ADAM-4000 Utility Software 342
Figure D.1 Search screen 342
Figure D.2 Configuration Screen 343
Figure D.3 Terminal Function 344
Figure D.4 Terminal Function 345
D.2 The Procedure for ADAM-4000 Series Installation Guide 346

Appendix E RS-485 Network 349

E.1 RS-485 Network 350
E.2 Basic Network Layout 350
Figure E.1 Daisychaining 351
Figure E.2 Star Structure 351
Figure E.3 Random Structure 351
E.3 Line Termination 352
Figure E.4 Signal Distortion 352
Figure E.5 Termination resistor locations 352
E.4 RS-485 Data Flow Control 353
Figure E.6 RS-485 data flow control with RTS 353

Appendix F How to Use the Checksum Feature355

F.1 Checksum Enable/Disable 356
Table F.1: Printable ASCII Characters 357

Appendix G ADAM-4000 I/O Modbus Mapping Table 359

G.1 ADAM-4000 I/O Modbus Mapping Table 360

Appendix H Changing Configuration to Modbus Protocol 373

H.1 Changing Configuration to Modbus Protocol 374

Chapter 1

Introduction

1.1 Overview

The ADAM Series is a set of intelligent sensor-to-computer interface modules containing built-in microprocessor. They are remotely controlled through a simple set of commands issued in ASCII format and transmitted in RS-485 protocol. They provide signal conditioning, isolation, ranging, A/D and D/A conversion, data comparison, and digital communication functions. Some modules provide digital I/O lines for controlling relays and TTL devices.

Software Configuration and Calibration

By merely issuing a command from the host computer, you can change an analog input module to accept several ranges of voltage input, thermocouple input or RTD input. All of the module's configuration parameters including I/O address, communication speed, HI and LO alarm, calibration parameters settings may be set remotely. Remote configuration can be done by using either the provided menu-based software or the command set's configuration and calibration commands.

By storing configuration and calibration parameters in a nonvolatile EEPROM, modules are able to retain these parameters in case of power failure.

Watchdog Timer

A watchdog timer supervisory function will automatically reset the ADAM modules in the event of system failure. Maintenance is thus simplified.

Power Requirements

Although the modules are designed for standard industrial unregulated 24 V_{DC} power supply, they accept any power unit that supplies power within the range of +10 to +30 V_{DC}. The power supply ripple must be limited to 5 V peak-to-peak, and the immediate ripple voltage should be maintained between +10 and +30 V_{DC}.

Connectivity and Programming

ADAM modules can connect to and communicate with all computers and terminals. They use RS-485 transmission standards, and communicate with ASCII format commands. The command set for every module type consists of approximately ten different commands.

The command set for input modules is larger because it incorporates alarm functions. All communications to and from the module are performed in ASCII, which means that ADAM modules can be virtually programmed in any high-level language.

RS-485 Network

The RS-485 network provides lower-noise sensor readings, as modules can be placed much closer to the source. Up to 256 ADAM modules may be connected to an RS-485 multi-drop network by using the ADAM RS-485 repeater which extends the maximum communication distance up to 4,000 ft. The host computer is connected to the RS-485 network with one of its COM ports through the ADAM-452x module (RS-232 to RS-422/485 converter).

To boost the network's throughput, ADAM RS-485 repeater uses a logical RTS signal to manage the repeater's direction. The only two wires that are needed for the RS-485 network, DATA+ and DATA-, are inexpensive shielded twisted pair.

Panel/DIN Rail mounting

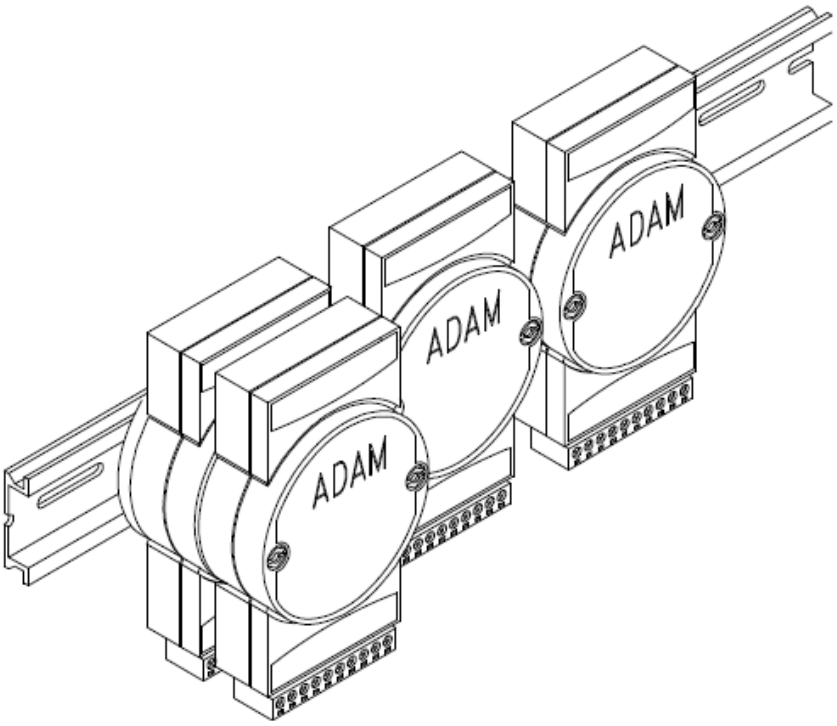

ADAM modules can be mounted on any panels, brackets, or DIN rails. They can also be stacked together.

The RS-485 network, together with screw-terminal plug connectors, allows for system expansion, reconfiguration, and repair without disturbing field wiring.

Protection against the environment

Since all the configurations are controlled by software, the protection provided by the packaging is very important. The plastic outer shell enhances resistance against corrosive materials, moisture and vibrations. ADAM modules' low power requirements help them to operate in temperatures from 0 to 70 ?, and in humidity from 0 to 95% (non-condensing). They are compactly built using automated SMT technology. Therefore, they can be implemented in water-tight and explosion-proof industrial enclosures.

1.2 Applications

- Remote data acquisition
- Process monitoring
- Industrial process control
- Energy management
- Supervisory control
- Security systems
- Laboratory automation
- Building automation
- Product testing
- Direct digital control

Chapter 2

Installation Guideline

This chapter provides guidelines to what is needed to set up and install an ADAM network. A quick hookup scheme is provided that lets you configure modules before they are installed in a network. To help you connect ADAM modules with sensor inputs, several wiring examples are provided. At last, you will find a programming example using the ADAM command set at the end of this chapter.

Be sure to plan the layout and configuration of your network carefully before you start. Guidelines regarding layout are given in Appendix E: RS-485 Network.

2.1 System Requirements to Set up an ADAM Network

The following list gives an overview of what is needed to setup,

install and configure an ADAM environment.

- ADAM modules
- A host computer, such as an IBM PC/AT compatible, that can output ASCII characters with a RS-232C or RS-485 port.
- Power supply for the ADAM modules (+10 to +30 VDC)
- ADAM Series Utility software
- ADAM Isolated RS-232/RS-485 Converter (optional)
- RS-232/RS-485 ADAM Repeater (optional)

Host computer

Any computer or terminal that can output in ASCII format over either RS-232 or RS-485 can be connected as the host computer. When only RS-232 is available, an ADAM RS-232/RS-485 Converter is required to transform the host signals to the correct RS-485 protocol. The converter also provides opto-isolation and transformer-based isolation to protect your equipment.

Power supply

For the ease of use in industrial environments, the ADAM modules are designed to accept industry standard +24 V_{DC}, unregulated power.

Operation is guaranteed when using any power supply between +10 and +30 V_{DC}. Power ripples must be limited to 5 V peak to peak while the voltage in all cases must be maintained between +10 and +30 V_{DC}. All power supply specifications are referenced at module connector. When modules are powered remotely, the effects of DC voltage drops must be considered.

All modules use on-board switching regulators to sustain good efficiency over the 10 to 30 V input range; therefore, we can assume that the actual drawn current is inversely proportional to the DC voltage.

The following example shows how to calculate the required current that a power supply should provide.

Assume that a +24 V_{DC} is used for five ADAM-4011 Analog Input Modules, and the distance between modules and power supply is not significant enough to cause a DC voltage drop. One ADAM-4011 module consumes a maximum of 1.2 Watts (W). The total required power will equal to 5 x 1.2=6 W. A power supply of +24 VDC should therefore be able to supply a minimal current of 6 / 24=0.25 Amps.

Small systems may be powered by using wall-mounted modular power supplies. Also, when modules operate in long communication lines (>500 feet), it is often more reliable to obtain power locally through modular power supplies. These inexpensive units can be easily obtained from any electronic retail stores.

The power cables should be selected according to the length of the power lines and the number of modules connected. When implementing a network with long cables, the use of thicker wire is more suitable due to the limitation of DC voltage drop. Furthermore, long wires can also cause interference with communication wires.

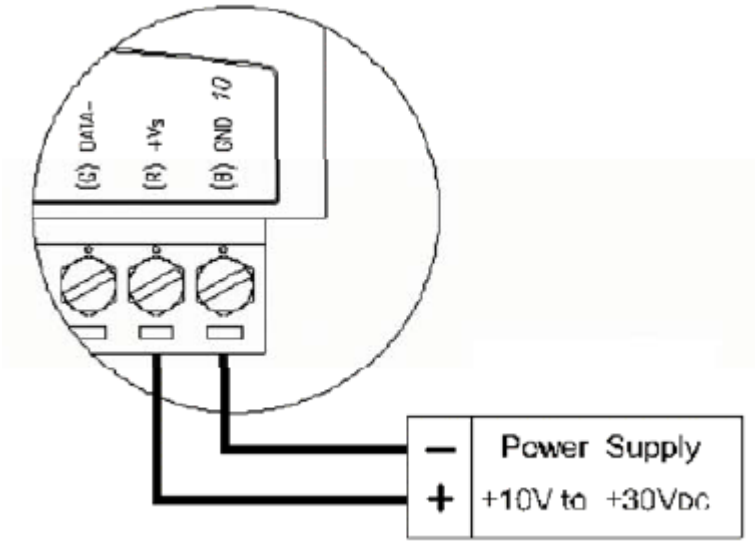

Figure 2.1 Power Supply Connections

We advise the following standard colors (as indicated on the modules) for each power line:

+Vs	(R)	Red
GND	(B)	Black

Communication Wiring

We recommend the use of shielded-twisted-pair cable in the ADAM network for reducing interference purpose, but the cable has to comply with the EIA RS-485 standard. Furthermore, only one set of twistedpair cable is required for transmitting Data. We advise the following standard colors (as indicated on the modules) for each the communication line:

DATA+	(Y)	Yellow
DATA-	(G)	Green

ADAM Utility Software

A menu-driven utility program is provided for ADAM module configuration, monitoring and, calibration. It also includes a terminal emulation program that lets you communicate through the ADAM command set. (See Appendix D, Utility Software and online help)

Note! *User can refer our help file to see more details for explanation of Utility operation.*

ADAM Communication Speed

In ADAM series, the baud rate can be configured from 1200 bps to 38.4 Kbps. However, the baud rate of all modules in an RS-485 network must be the same.

ADAM Isolated RS-232/RS485 Converter (optional): ADAM-452x

When the host computer or terminal only has a RS-232 port, an ADAM Isolated RS-232/RS-485 Converter is required. Since this module is not addressable by the host, the baud rate must be reset using a switch inside the module. The factory default setting is 9600 baud.

ADAM Repeater (optional): ADAM-451x

When communication lines exceed 4000 ft (1200 meter) or more than 32 ADAM modules are connected, a repeater should be implemented. In a network, up to eight Repeater modules can be connected allowing connection up to 255 ADAM modules. As with the Converter module, the Repeater module is not addressable by the host and the baud rate must be reset by changing the switch inside the module. The factory default setting is 9600 baud.

2.2 Basic Configuration and Hook-up

Before placing a module in an existing network, the module should be configured. Though all modules are initially configured at the factory, it is recommended to check if the baud rate is set correctly beforehand.

Default Factory Settings

Baud rate: 9600 Bit/sec.

Address: 01 (hexadecimal)

The basic hook-up for module configuration is shown below.

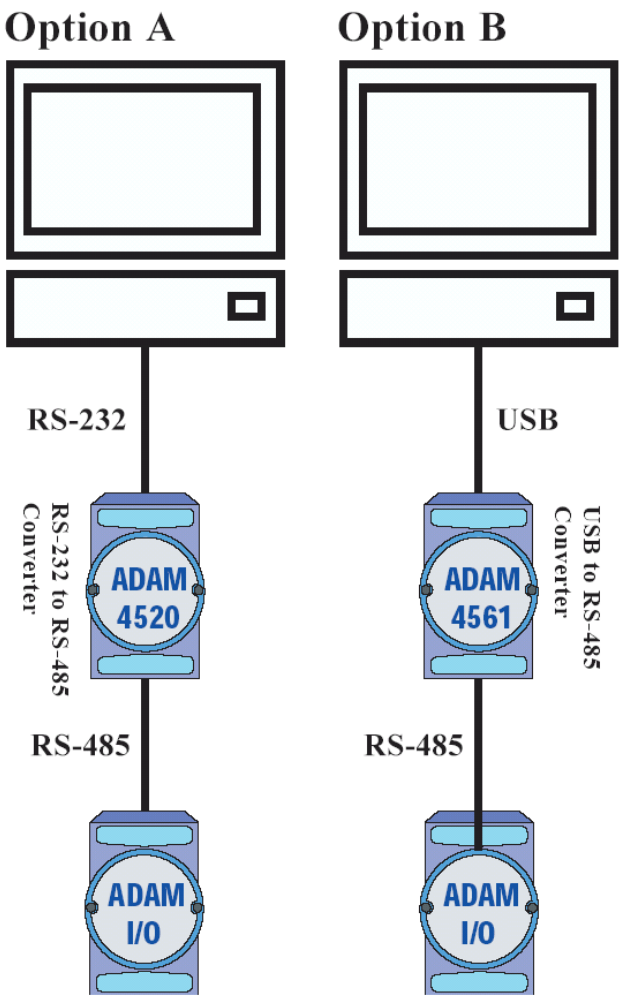

Figure 2.2 Basic Hook-up of ADAM Module to Host Switches

The following items are required to configure a module: an ADAM converter module, a personal computer with RS-232 port (baud rate set to 9600) and the ADAM utility software.

Configuration with the ADAM Utility Software

The easiest way to configure the ADAM module is by using the ADAM utility software. It is a user friendly structured menu program that will guide you through every step of the configuration. (See Appendix D, Utility Software)

Changing the protocol from ADAM ASCII to Modbus

Some ADAM-4000 modules support both ADAM ASCII and Modbus protocols, and the factory default setting of these modules is ADAM ASCII protocol. If you would like to configure the modules to Modbus protocol, please refer to Appendix H which describes how to change the protocol in ADAM utility.

Configuration with the ADAM command set

ADAM modules can also be configured by issuing direct commands through a terminal emulation program that is part of the ADAM utility software. The following example will guide you through the setup of an analog input module. Assume an ADAM-4011 Analog Input module still has its default settings (baud rate 9600 and address 01h), and you are being requested to send its default settings before any reconfiguration is made.

Note! *An analog input module requires a maximum of 7 seconds to perform auto calibration and ranging after reboot or start up.*

During this time span, the module can not be addressed to perform any other actions.

Example:

Make sure that the module is properly connected and turn on all the connected devices. Then, start the terminal emulation program, and type in the following command:

$012(cr)

The command above requests the module with address 01 to send its configuration status

!01050600

Module at address 01 responds that it is configured for an input range of +/-2.5 V, baud rate of 9600, integration time of 50 ms (60 Hz).

The code also shows engineering units and no checksum checking or generation.

To change the configuration setting of the analog input module, the following command is issued:

%01070F0600(cr)

% = change configuration

01 = target module at address 00 to:

07 = change address to 07 hexadecimal

0F = set input range to Type K thermocouple

06 = set baud rate to 9600

00 = set integration time to 50 ms (60 Hz)

disable checksum

set data format to engineering units

(Please refer to Chapter 4, a full description of Command set syntax for an analog input module)

When the module received the configuration command, it will respond with its new address as shown below:

!07(cr)

Before giving more commands to the module, please wait for 7 seconds to let the new configuration settings to take effect.

Note! *All reconfiguration except for changing baud rate and checksum values can be done dynamically, and the modules are not required to reset. However, all the connected devices are required to reset by turning power off and on after the baud rate or checksum values are changed. The baud rate or checksum values should be the same for all the connected devices after the reconfiguration. See the next page for a strategy in changing baud rate and checksum of the network.*

2.3 Baud Rate and Checksum

ADAM modules contain EEPROMs to store configuration information and calibration constants. The EEPROM replaces the conventional array of switches and pots that are originally used for specifying baud rate, input and output range… etc.

Since there is no visual indication of a module's configuration status, it is impossible to know the baud rate, address and other settings just by looking at it. It might not be possible to establish communications with a module whose baud rate and address are unknown. To overcome this problem, most modules have an input terminal labeled INIT*. Booting the module while connecting the INIT* terminal with the module's GND terminal forces the configuration into a known state called the INIT* state. Besides, some newer modules have INIT switch which you can set "Init" or "Normal" (See Figure 2.4). If you set the switch to "Init", then it becomes INIT* state.

INIT* state defaults:

Baud rate: 9600

Address: 00h

Checksum: disabled

Forcing the module in INIT* state does not change any parameters in the module's EEPROM. When the module is in the INIT* state with its INIT* and GND terminals shorted, all configuration settings can be changed, and the module will respond to all other commands normally.

Changing Baud rate and Checksum

Baud rate and checksum settings have several things in common:

- They should be the same for all modules and host computer.
- Their settings can only be changed by putting a module in the INIT* state.
- Changed settings can only take effect after a module is rebooted

To alter baud rate or checksum settings, you must perform the following steps:

- Power on all components except the ADAM Module.
- • Power the ADAM module on while shorting the INIT* and GND terminals (See Figure 2.3) or set the INIT switch to “Init” (See Figure 2-4)

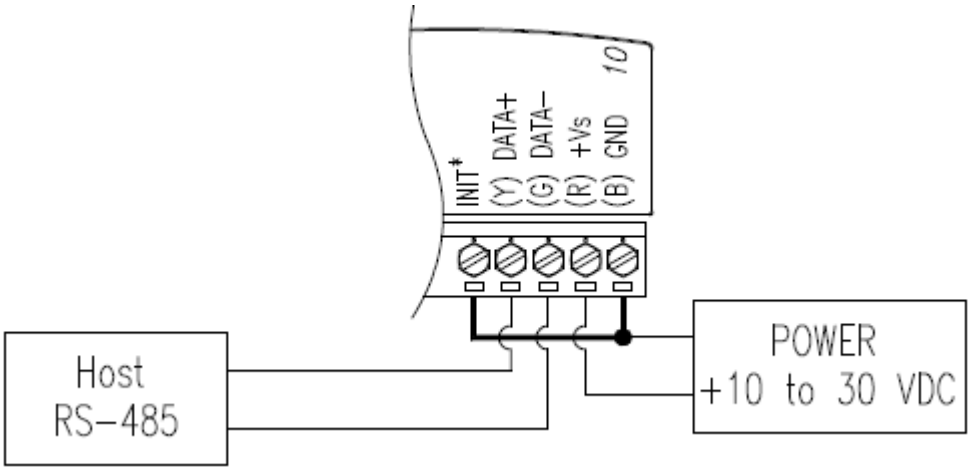

Figure 2.3 Grounding the INIT* Terminal

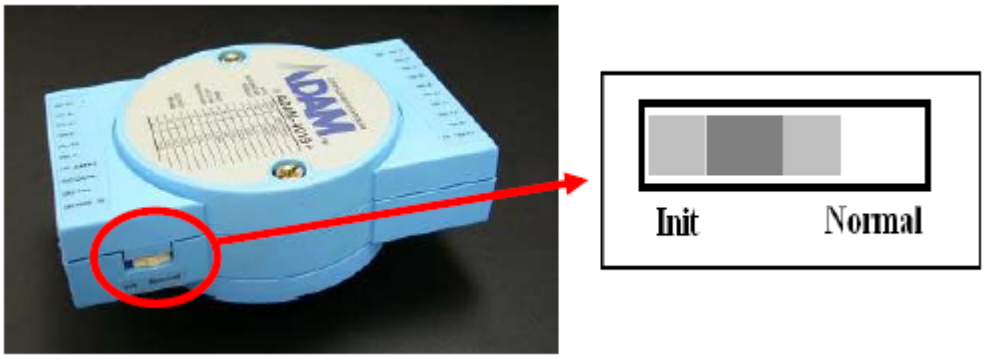

Figure 2.4 Set INIT switch to “Init”

- Configure the checksum status and/or the baud rate.
- Switch the power OFF to the ADAM Module.
- Remove the grounding of the INIT* terminal and turn on the module, or set the INIT switch to “Normal”.
- Check the settings (If the baud rate has changed, the settings on the host computer should be changed accordingly).

2.4 Multiple Module Hookup

The Figure below is an example of how ADAM modules are connected in a multiple module network:

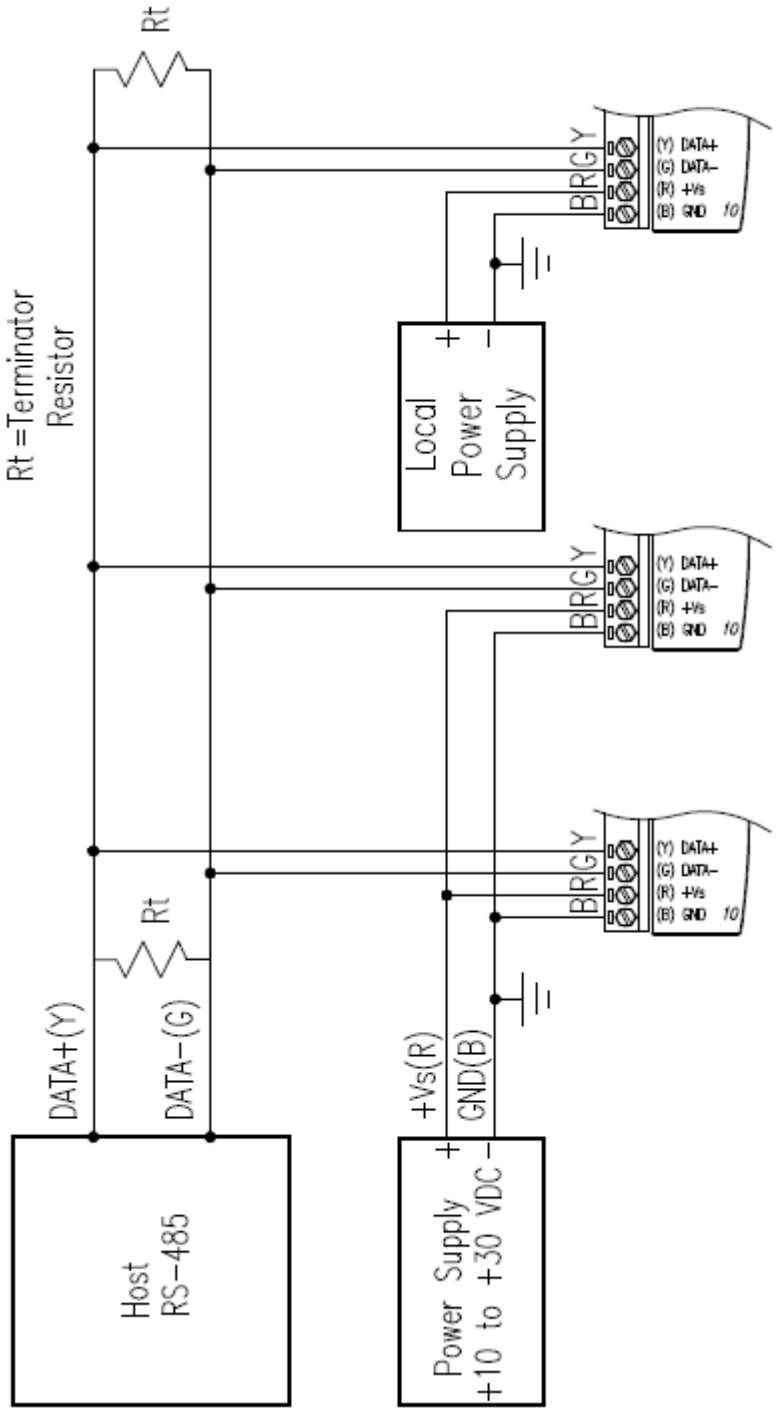

Figure 2.5 Multi-module Connection

2.5 Programming Example

The following example is a simple program written in Visual Basic 6.0 that demonstrates how to get temperature reading which is stored in the address of 01H from ADAM-4011 module.

1. Using ADAM Utility to check the settings as the following below:
   "Address = 01H", "Baud rate = 9600" and "Checksum = Disabled".

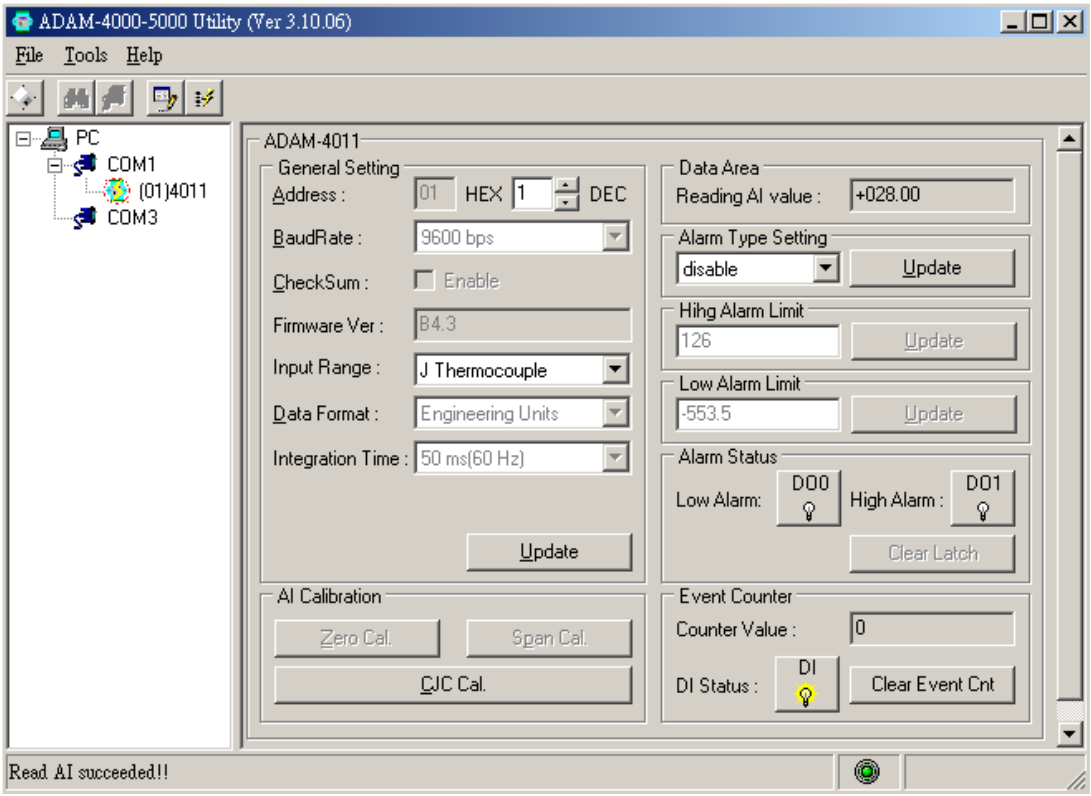

2. Run VB 6.0 and add a control via “Project\Component”.

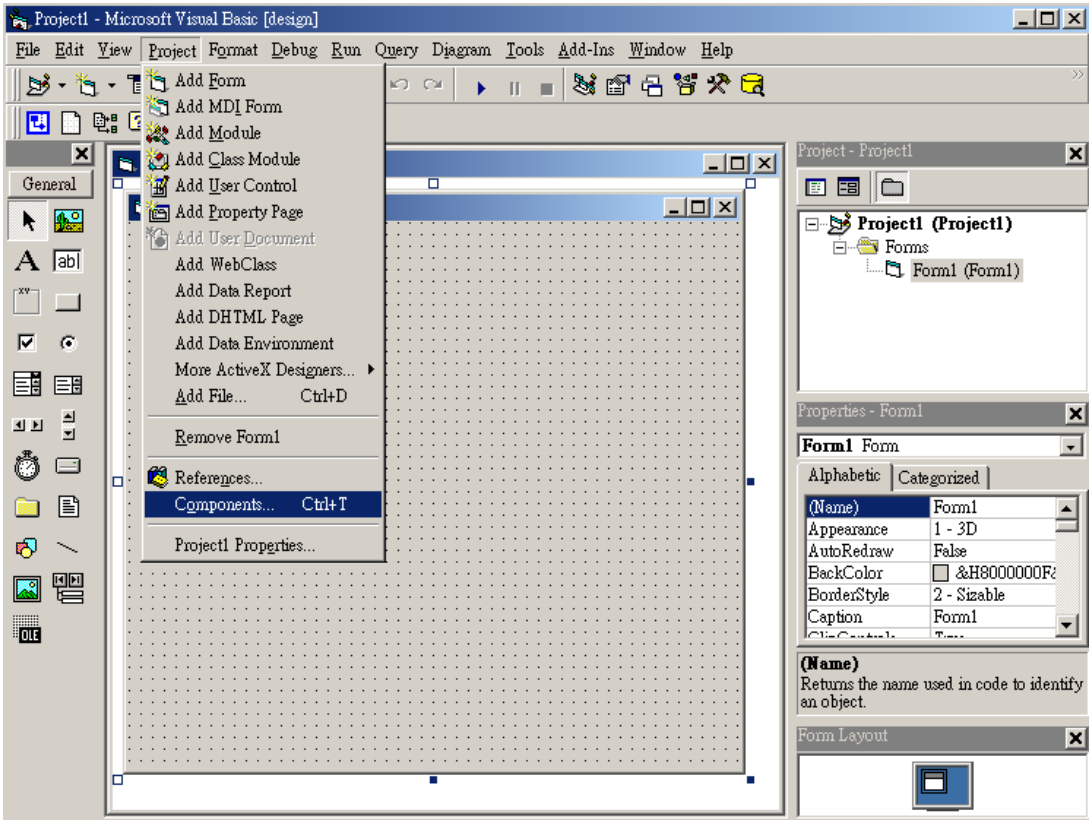

3. Select “Microsoft Comm Control”.

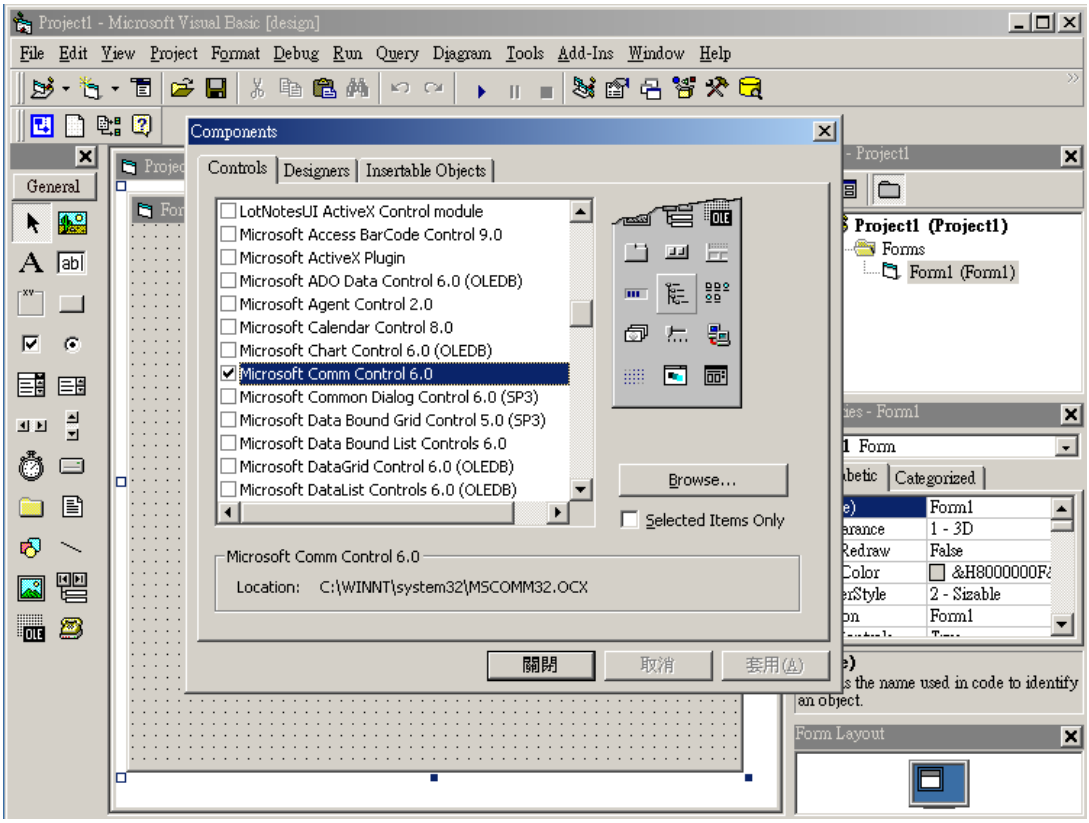

4. Add the Comm Control on the form.

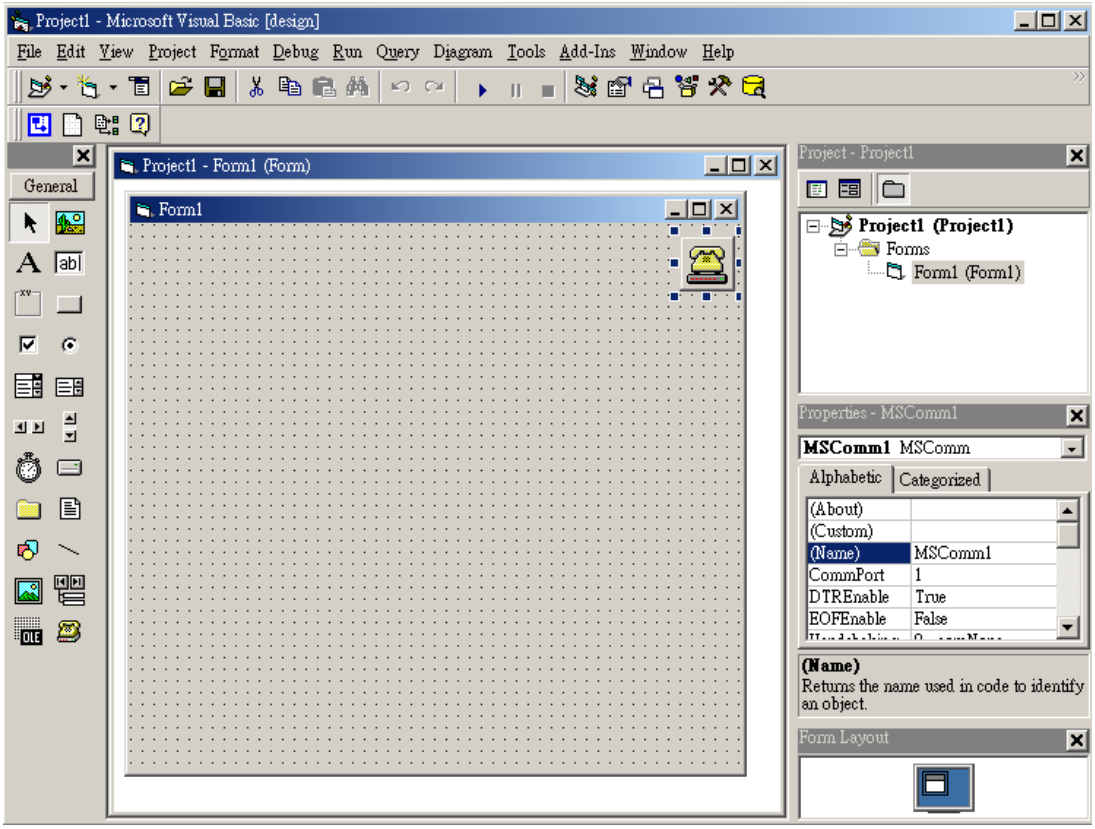

5. Add three Command Buttons on the form as shown below.

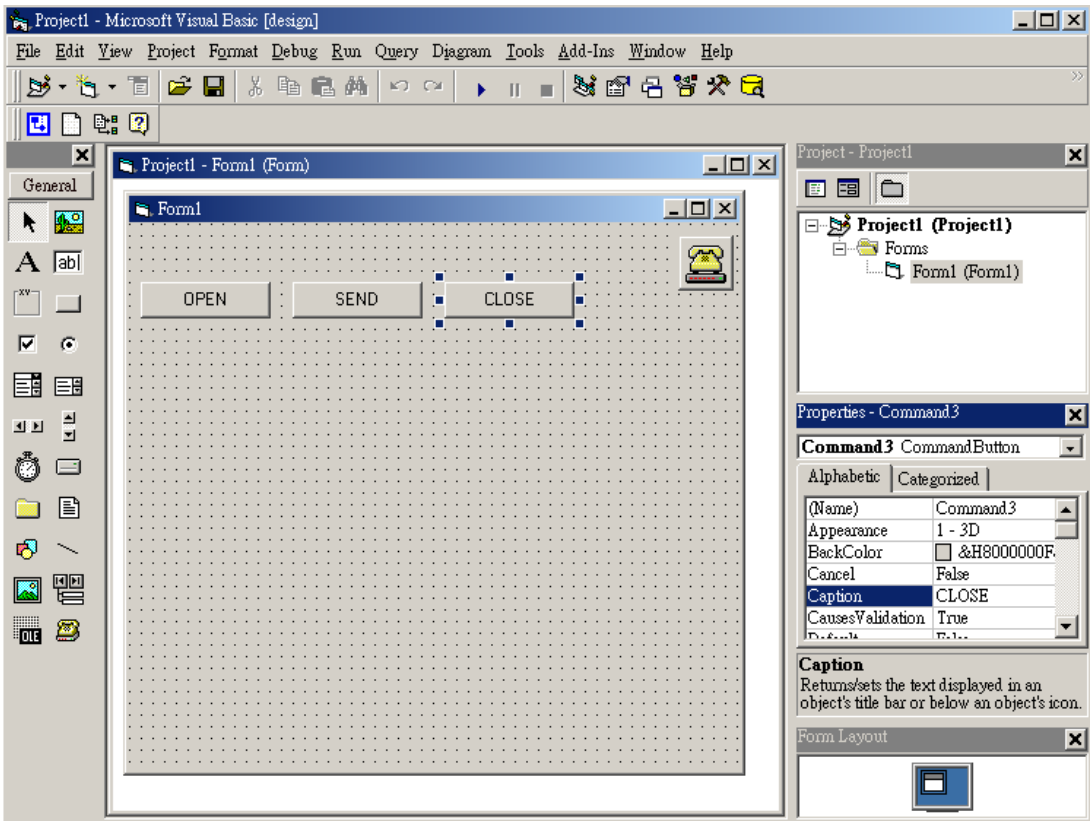

6. Add one Label and one Text on the form as shown below.

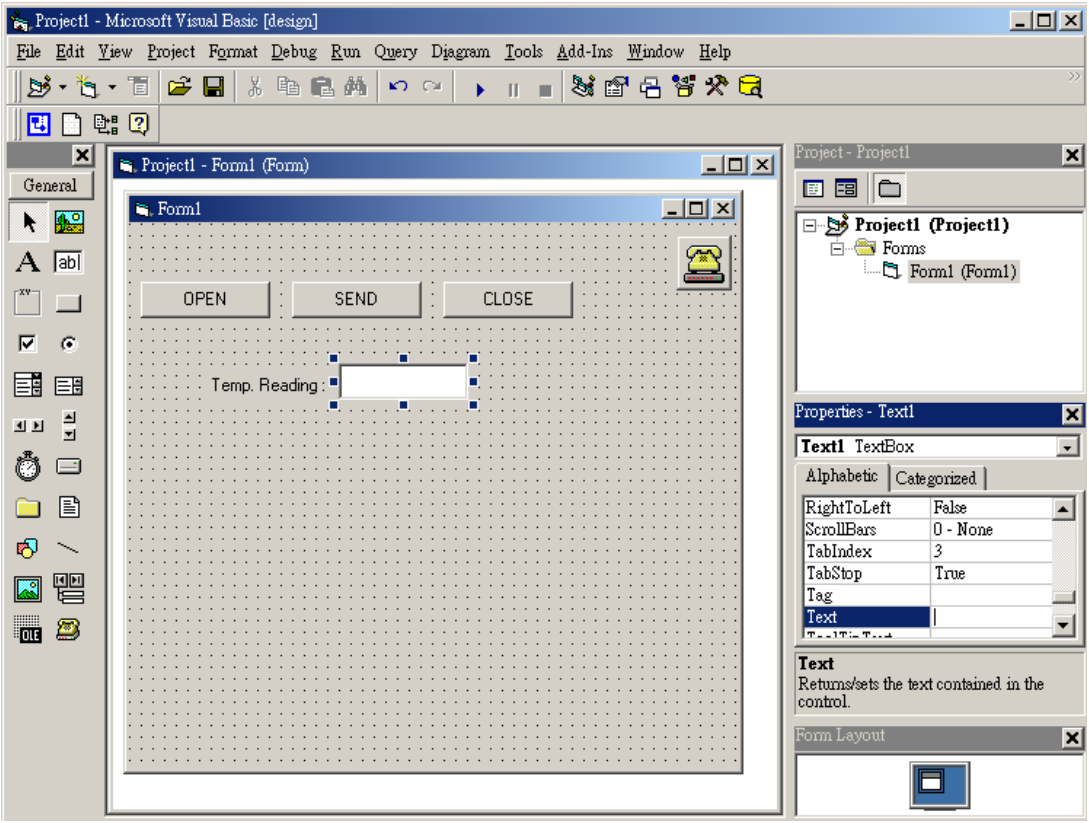

7. Click OPEN Button and type in the following codes. The source codes are listed at the end of this section.

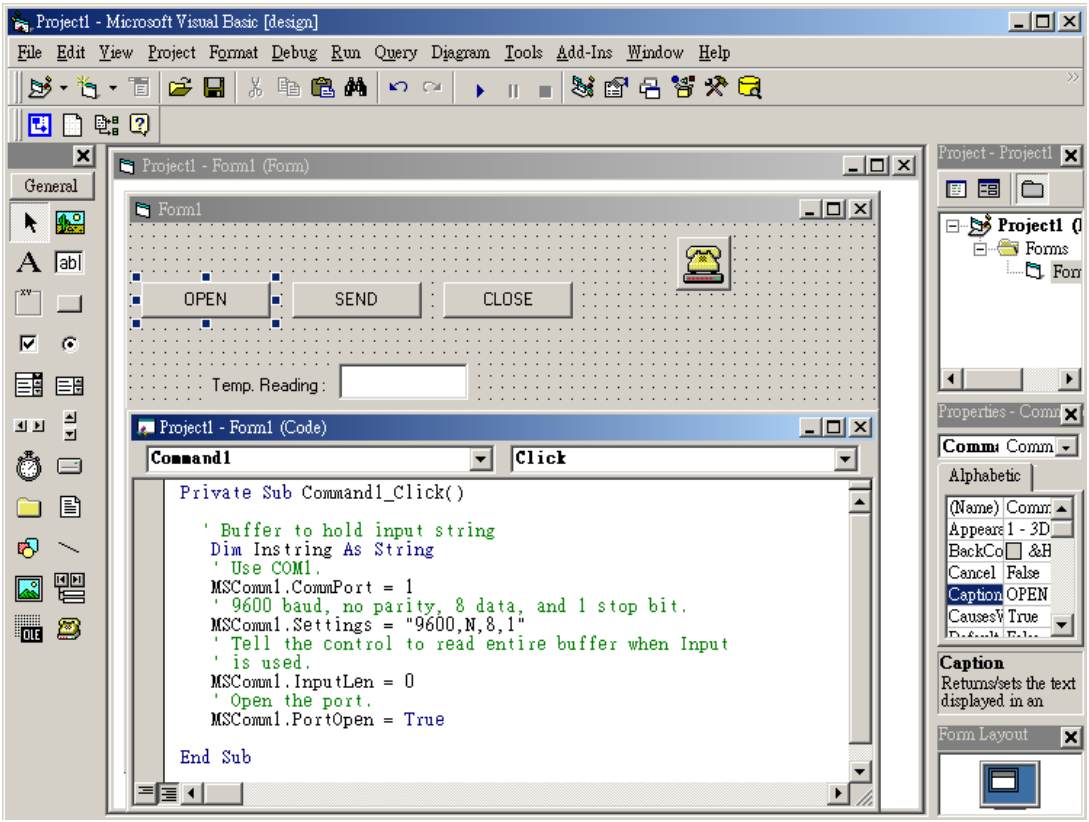

8. Click SEND Button and type in the following codes. The source codes are listed at the end of this section.

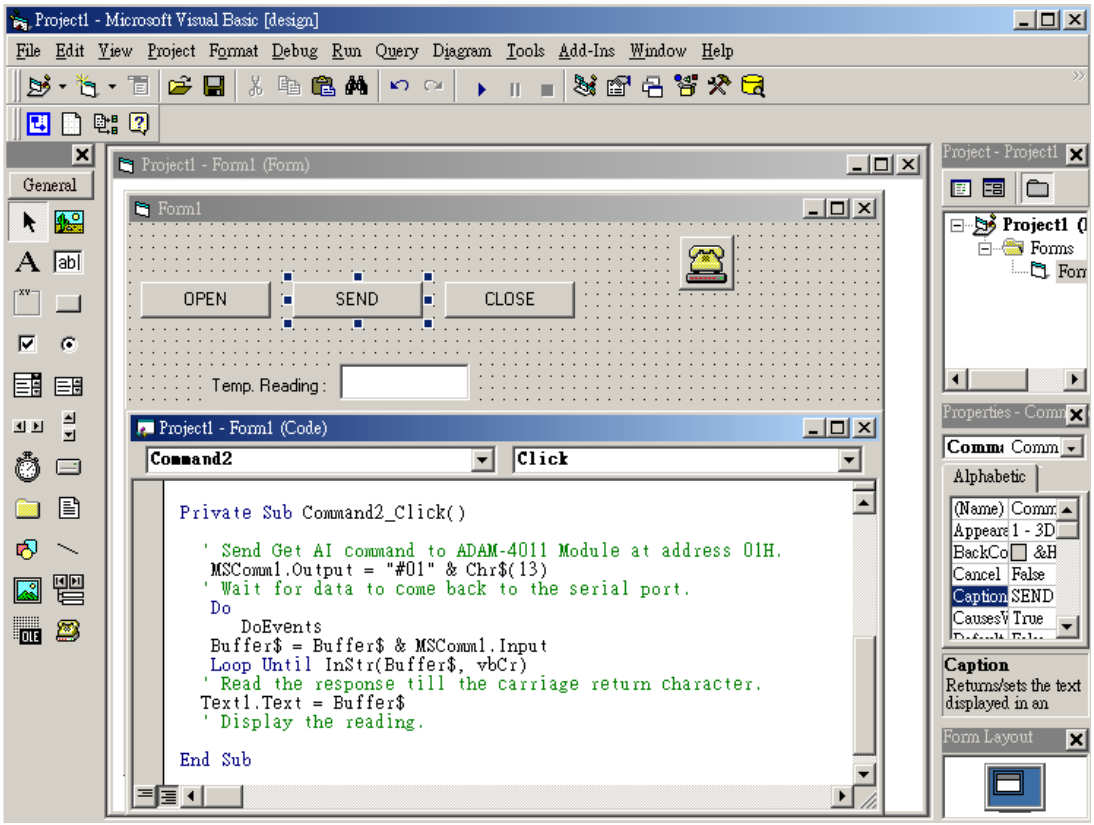

9. Click CLOSE Button and type in the following codes. The source codes are listed at the end of this section.

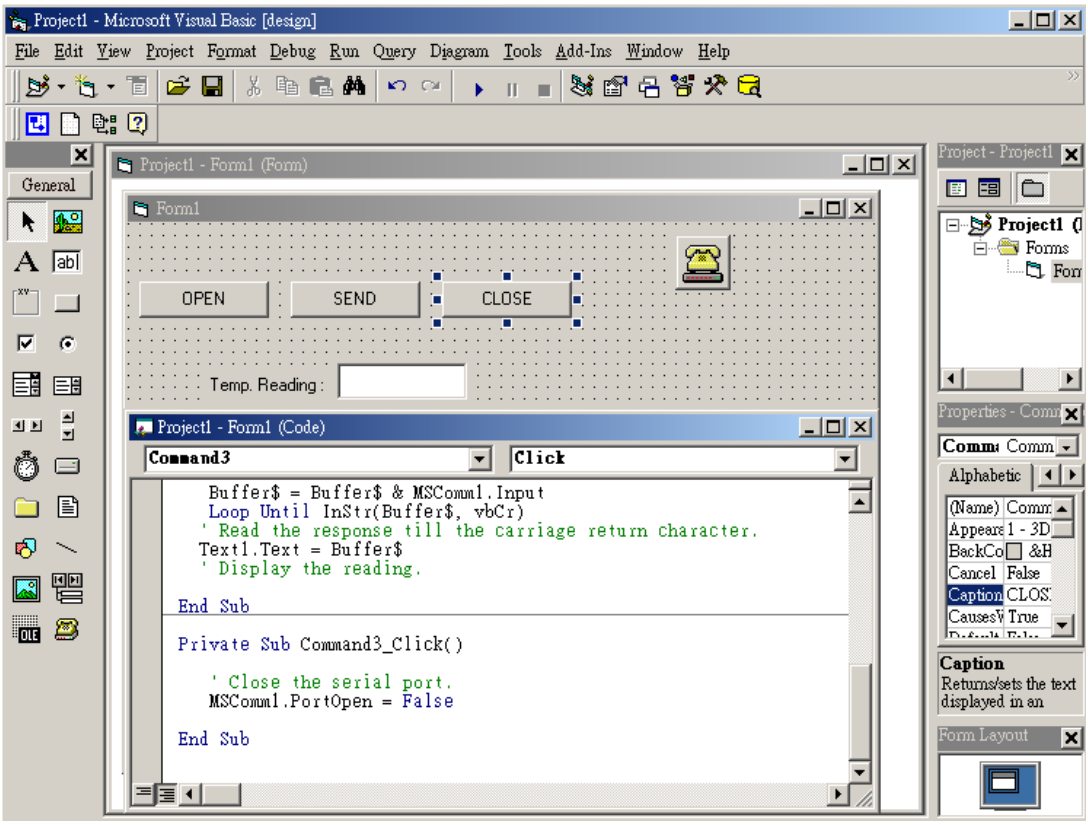

10. Run the Project → Click OPEN to open COM1 → Click SEND to send the Get Temperature Reading Command. Now, you will find the reading the same as the displayed format shown below.

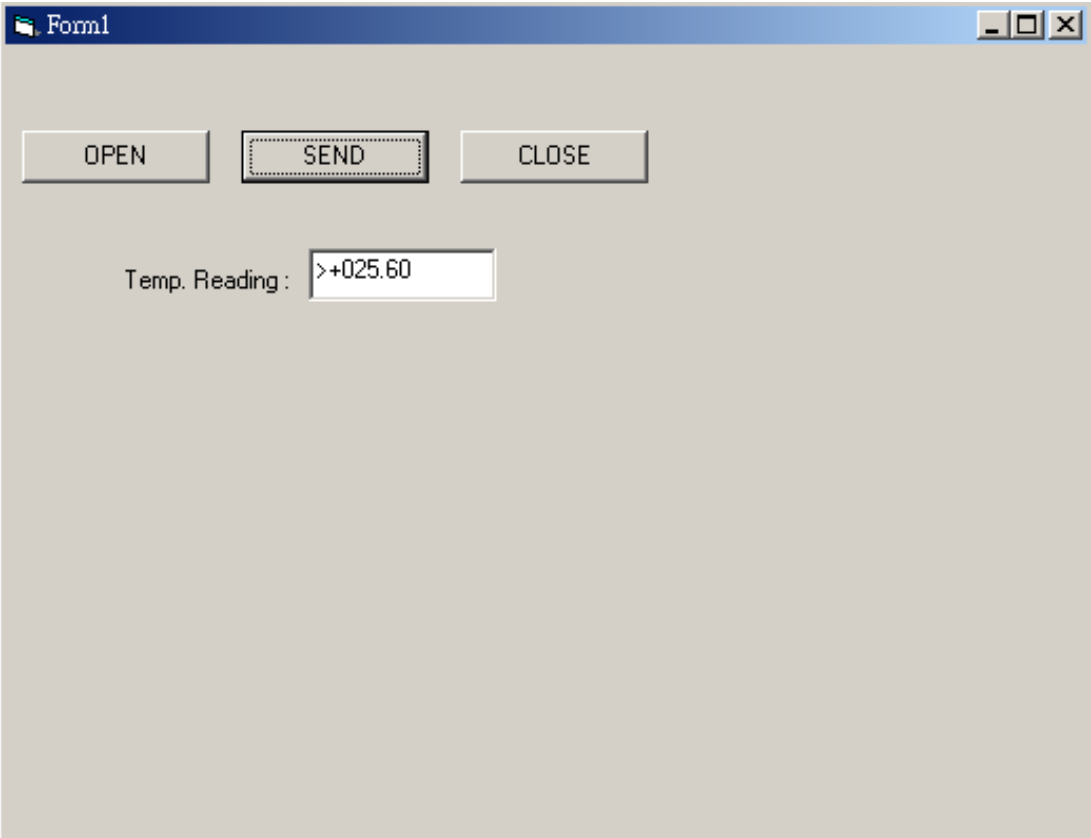

Program Source Codes:

- OPEN Command Button:

```
Private Sub Command1_Click()
  ' Buffer to hold input string
  Dim Instring As String
  ' Use COM1.
  MSComm1.CommPort = 1
  ' 9600 baud, no parity, 8 data, and 1 stop bit.
  MSComm1.Settings = "9600,N,8,1"
  ' Tell the control to read entire buffer when Input ' is used.
  MSComm1.InputLen = 0
  ' Open the port.
  MSComm1.PortOpen = True
End Sub
```

- **SEND Command Button:**

```
Private Sub Command2_Click()
  ' Send Get AI command to ADAM-4011 Module at address 01H.
  MSComm1.Output = "#01" & Chr$(13)
  ' Wait for data to come back to the serial port.
  Do
      DoEvents
  Buffer$ = Buffer$ & MSComm1.Input
  Loop Until InStr(Buffer$, vbCr)
  ' Read the response till the carriage return character.
  Text1.Text = Buffer$
  ' Display the reading.
End Sub
```

- **CLOSE Command Button**

```
Private Sub Command3_Click()
  ' Close the serial port.
  MSComm1.PortOpen = False
End Sub
```

Chapter 3

I/O Modules

3.1 The Common Specification of ADAM-4000 I/O Series

Communication:

- RS-485 (2-wire) to host
- **Speeds:** 1200, 2400, 4800, 9600, 19200, 38400, 57600, 115200 bps (ADAM-4080, ADAM-4080D only support up to 38400 bps)
- **Max. communication distance:** 4000 feet (1.2 km)
- Power and communication LED indicator
- ASCII command/response protocol
- Communication error checking with checksum
- Asynchronous data format: **1** start bit, **8** data bits, **1** stop bit, **no** parity (**N, 8, 1**)
- Up to 256 multidrop modules per serial port
- Online module insertion and removal
- Transient suppression on RS-485 communication lines

Power Requirement:

- Unregulated +10 ~ +30 VDC
- Protected against power reversal

Mechanical:

- **Case:** ABS+PC with captive mounting hardware
- **Plug-in screw:** Stripped length: 6.5 mm
  Terminal block: #14 ~22 or #14~28 AWG

Environment

- **EMI:** Meets FCC Class A or CE
- **Operating Temperature:** -10 ~ 70° C (14 ~ 158° F)
- **Storage Temperature:** -25 ~ 85° C (-13 ~ 185° F)
- **Humidity:** 5 ~ 95%, non-condensing

3.2 ADAM-4011/4011D Thermocouple Input Modules

The ADAM-4011/4011D Thermocouple Input Modules use a microprocessor-controlled integrating A/D converter to convert sensor voltage, current or thermocouple signal into digital data. The digital data is then translated into either two's complement hexadecimal format or percentage of full-scale range (FSR) according to the module's configuration. When prompted by the host computer, the data is sent through a standard RS-485 interface.

The ADAM-4011/4011D Thermocouple Input Modules offer signal conditioning, A/D conversion, ranging, and RS-485 digital communication functions. They protect your equipment from power surges at the ground terminal by providing opto-isolation of the A/D input and transformer based isolation up to 3000 V_{DC}. (ADAM-4011 has transformer-based isolation up to 500 V_{DC})

Open Thermocouple Detection and Input Surge Protection (ADAM-4011D only)

The ADAM-4011D provides an open thermocouple detection function. Users can use a simple command to detect whether the thermocouple is opened or closed. The module also provides surge protection on its input channel. Internal high-speed transient suppressor on its input channel protects the module from dangerous spikes and voltages.

Front Panel LED Indicator (ADAM-4011D only)

The 4½ digits LED display on the back of the ADAM-4011D lets you monitor the process readings right at their source. The module displays readings in a wide variety of formats as well as high-low alarm messages. The ADAM-4011D offers flexibility, easy installation, and direct availability of process data. For critical process monitoring, this module is the ideal choice.

Digital Input/Output

The ADAM-4011/4011D Thermocouple Input Modules also contain two digital outputs and one digital input. Outputs are open-collector transistor switches that may be controlled by the host computer. They can control solid-state relays, which may be used to control heaters, pumps, and other electrical powered equipment. The digital inputs may be read by the host computer and used to sense the state of a remote digital signal.

Event counting

The event counter is connected to the Digital Input channel and can be used to keep track of the total amount of external low-speed pulses. Its accumulated maximal count is 65535. The count will maintain at 65535 even if the actual number of events exceeds 65535. The counter can be read or reset to zero by the host computer.

Since the Event counter's data are not stored in EEPROM, the event counter is cleared and set to zero after every reset or start up of the analog input module.

Alarm signaling

Analog input modules include High and Low alarm functions. High and Low alarm limits may be downloaded into the module's EEPROM by the host computer.

The alarm functions can be enabled or disabled remotely. When the alarm function is enabled, both Digital Output channels are used to indicate the High and Low alarm state. Digital Output channel 1 (DO1) equals to High alarm state, and Digital Output channel 0 (DO0) equals to Low alarm state. The High and Low alarm states can be read at any time by the host computer.

Every A/D conversion will be followed by a comparison with the High and Low limit. When the input value exceeds one of these limits, the High or Low alarm state is set to ON.

There are two alarm mode options, Momentary and Latching. If the alarm is in Latching mode, the alarm will stay on even if the input value returns within the limits. An alarm in Latching mode can be turned OFF by giving a Clear Alarm command from the host computer. A Latching alarm is cleared by the module when the opposite alarm is set. When

the module receives a value that is lower than the Low alarm limit, it will clear the High alarm and turn the Low alarm ON.

When the alarm is in Momentary mode, the alarm will be turned OFF as soon as the input value returns within the limits.

The arrangement of coupling High and Low alarm states with Digital Output lines may be utilized to build ON/OFF controllers that

can operate without the involvement of host computer.

Function Description for the ADAM-4011 Thermocouple Input Module

To provide a better understanding of the ADAM module functions, the following is a description of the module ADAM-4011 with the most extensive set of functions.

All analog input data first flow through the PGA (programmable gain amplifier). The amplifier can vary its gain from 1 to 128. The PGA then automatically adjusts the signal to a range from -2.5 V to +2.5 V.

This ensures an optimal input voltage and resolution for the A/D converter.

The A/D conversion is supervised by the microprocessor that holds the calibration software. Two kinds of calibrations, Auto Zero and Auto Span calibrations, take place automatically in startup or reset. Normal calibration is used to adjust the signal according to calibration parameters defined by the user.

The digital 10 Hz filter provides a steady state output by using the Δ unction.

Before the data enter the microprocessor, they pass through an optical isolation device which prevents the chance of circuit damaging caused by power surges from the ground terminal.

The microprocessor has six basic functions:

- Linearization of T/C (Thermocouple)
- Communication software and command set
- Calibration software
- Alarm monitoring
- Event counting
- Management of the EEPROM device that holds the system parameters
- Data transformation

After data have been transformed to the right data format, they are being passed on to the RS-485 output port.

If an input value exceeds the High alarm setting or falls below the Low alarm setting, a flag is set in one of the Digital Output channels.

Finally, the on-board switching regulator accepts voltage between +10 and +30 V_{DC}, and it has an isolation value of 500 V_{DC} to protect your equipment from damages caused by power surges.

3.2.1 ADAM-4011D Thermocouple Input Module

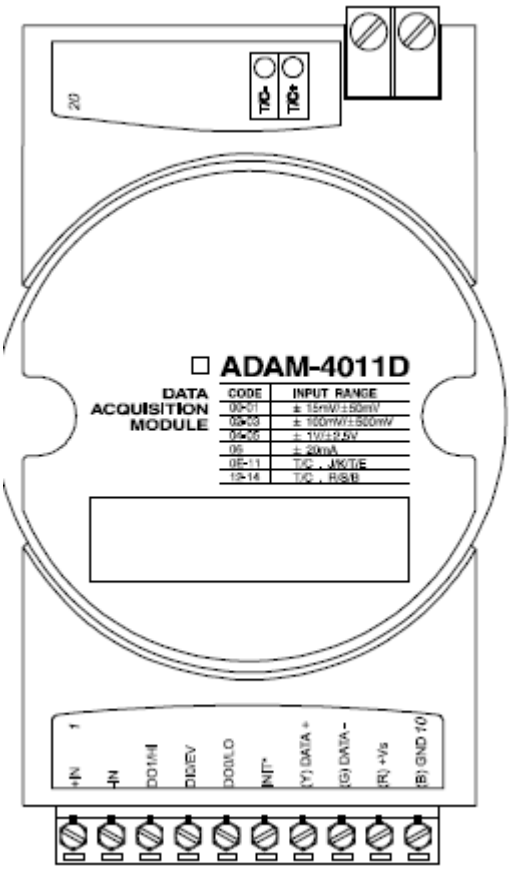

Figure 3.1 ADAM-4011 Thermocouple Input Module

Accepts:
- J, K, T, E, R, S and B thermocouples
- Millivolt inputs: ±15 mV, ±50 mV, ±100 mV and ±500 mV
- Volt inputs: ±1 V and ±2.5 V
- Current input: ±20 mA (Requires a 125Ω resistor)

Two digital output channels and one digital input channel are provided.

Depending on the module's configuration setting, it can forward the data to the host computer in one of the following formats:
- Engineering units (°C, mV, V, or mA)
- Percent of full-scale range (FSR)
- Two's complement hexadecimal

3.2.2 ADAM-4011D Thermocouple Input Module

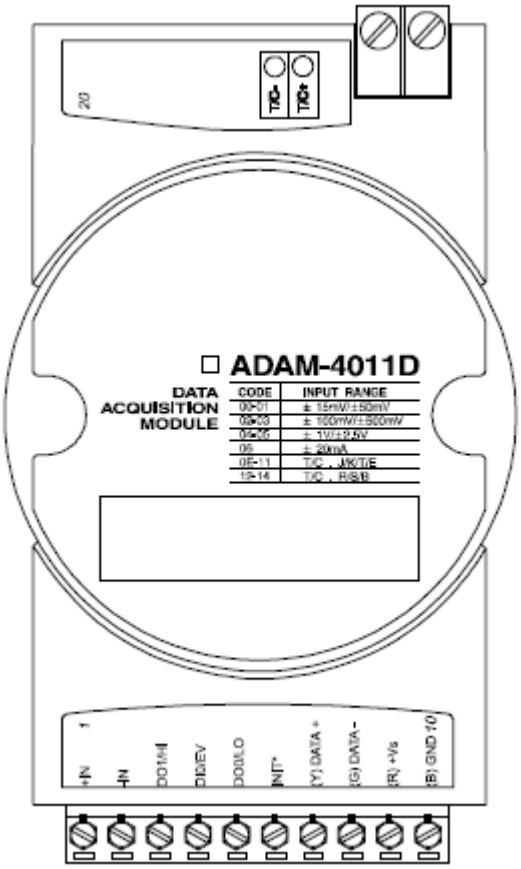

Figure 3.2 ADAM-4011D Thermocouple Input Module with LED Display

Accepts:

- J, K, T, E, R, S and B thermocouples
- Millivolt inputs: ±15 mV, ±50 mV, ±100 mV and ±500 mV
- Volt inputs: ±1 V and ±2.5 V
- Current input: ±20 mA (Requires a 125 resistor)

Two digital output channels and one digital input channel are provided.

Depending on the module's configuration setting, it can forward the data to the host computer in one of the following formats:

- Engineering units (oC, mV, V, or mA)
- Percent of full-scale range (FSR)
- Two's complement hexadecimal

3.2.3 Application Wiring

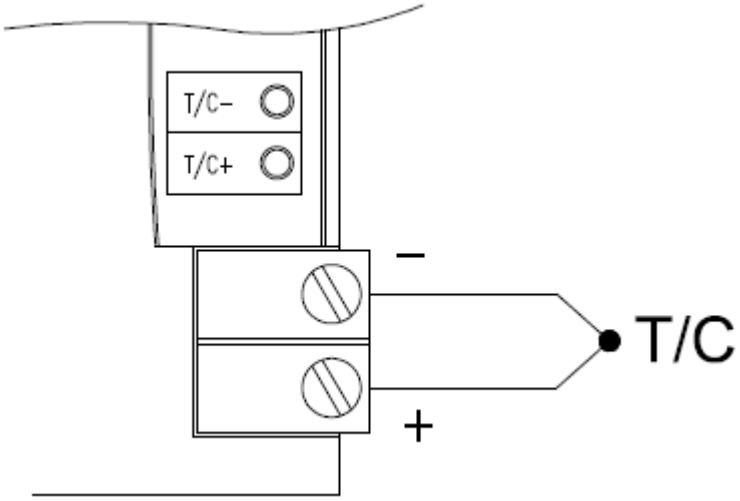

Figure 3.3 ADAM-4011/4011D Thermocouple Input Wiring Diagram

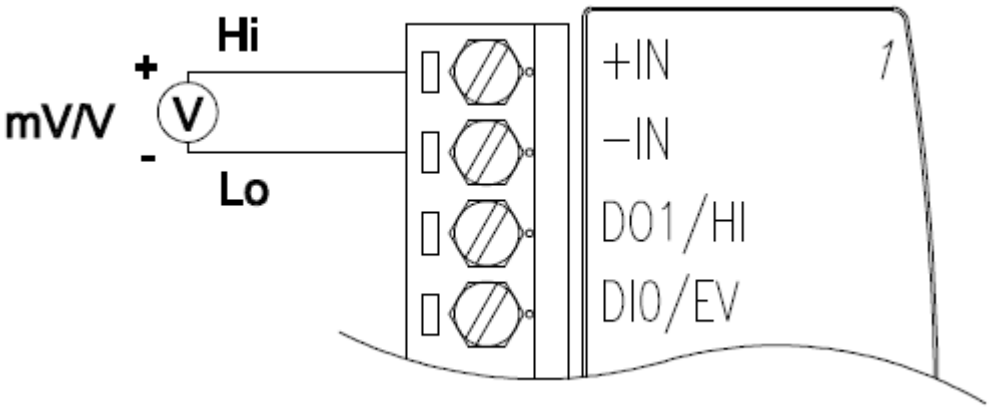

Figure 3.4 ADAM-4011/4011D Millivolt and Volt Input Wiring Diagram

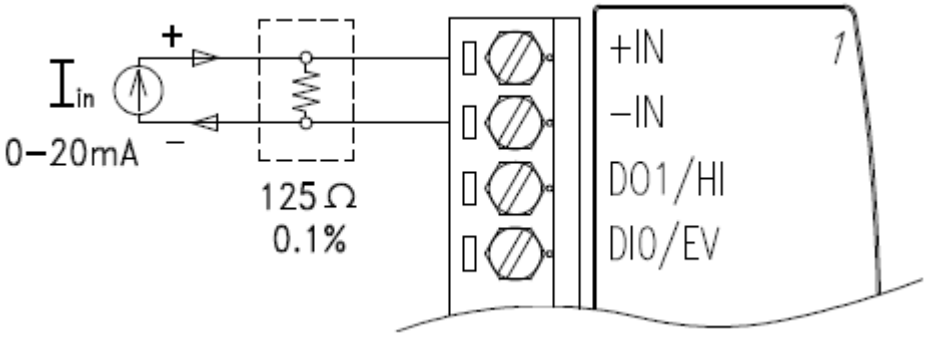

Figure 3.5 ADAM-4011/4011D Process Current Input Wiring Diagram

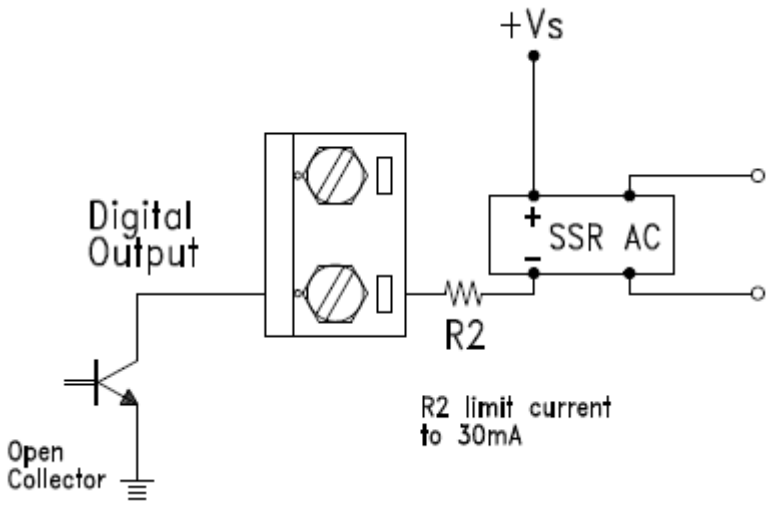

Figure 3.6 ADAM-4011/4011D Digital Output Wiring Diagram Used with SSR (HI-LO alarm)

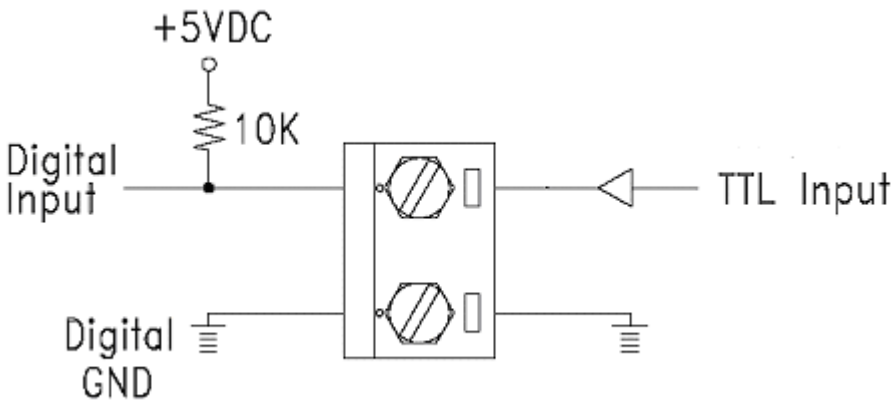

Figure 3.7 ADAM-4011/4011D Digital Input Wiring Diagram Used with TTL

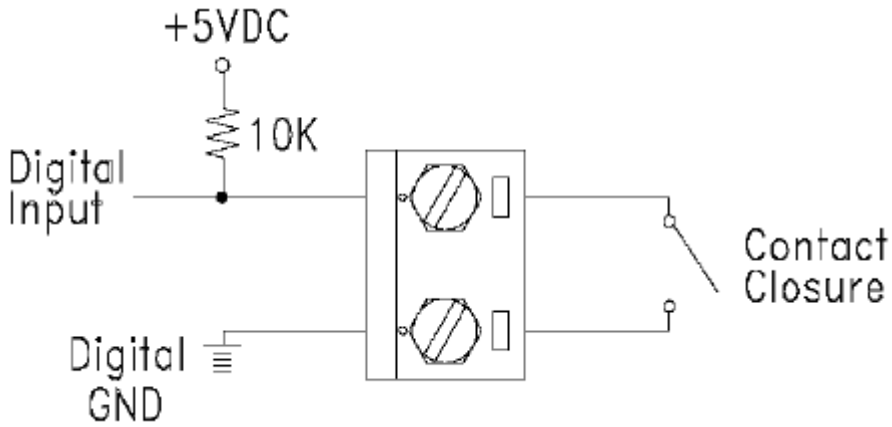

Figure 3.8 ADAM-4011/4011D Digital Input Wiring Diagram Used with Dry contact

3.3 ADAM-4012 Analog Input Module

The ADAM-4012 Analog Input Modules use a microprocessorcontrolled integrating A/D converter to convert sensor voltage or current signals into digital data. The digital data are then translated into either two's complement hexadecimal format or percentage of full-scale range (FSR) according to the module's configuration. When prompted by the host computer, the data are sent through a standard RS-485 interface.

The ADAM-4012 Analog Input Modules offer signal conditioning, A/D conversion, ranging, and RS-485 digital communication functions. They protect your equipment from power surges at the ground terminal by providing opto-isolation of the A/D input and up to 3000 V_{DC} transformer based isolation.

Digital Inputs/Outputs

The ADAM-4012 also contains two digital outputs and one digital input. Outputs are open-collector transistor switches that may be controlled by the host computer. They can control solid-state relays, which can be applied to heaters, pumps, and other electrical powered equipment. The digital inputs may be read by the host computer and used to sense the state of a remote digital signal.

Event counting

The event counter is connected to the Digital Input channel and can be used to keep track of the total amount of external low-speed pulses.

Its accumulated maximal count is 65535. The number 65535 is held even if the actual number of events exceeds 65535. The counter can be read or reset to zero by the host computer.

Since the Event counter's data are not stored in EEPROM, the event counter is cleared and set to zero after every reset or start up of the analog input module.

Alarm signaling

Analog input modules include High and Low alarm functions. High and Low alarm limits may be downloaded into the module's EEPROM by the host computer.

The alarm functions can be enabled or disabled remotely. When the alarm function is enabled, both Digital Output channels are used to indicate the High and Low alarm states. Digital Output channel 1 (DO1) equals to High alarm state, and Digital Output channel 0 (DO0) equals to Low alarm state. The High and Low alarm states can be read at any time by the host computer.

Every A/D conversion will be followed by a comparison with the High and Low limit. When the input value exceeds one of these limits, the High or Low alarm state is set to ON.

There are two alarm mode options, Momentary and Latching.

If the alarm is in Latching mode, the alarm will stay on even when the input value returns within the limits. It can also be turned OFF by issuing a Clear Alarm command from the host computer. A Latching alarm is cleared by the module when the opposite alarm is set.

When the module receives a value that is lower than the Low alarm limit, it will clear the High alarm and turn the Low alarm ON.

When the alarm is in Momentary mode, the alarm will be turned OFF as soon as the input value returns within the limits.

The arrangement of coupling High and Low alarm states with Digital Output lines may be utilized to build ON/OFF controllers that can operate without involving the host computer.

3.3.1 ADAM-4012 Analog Input Module

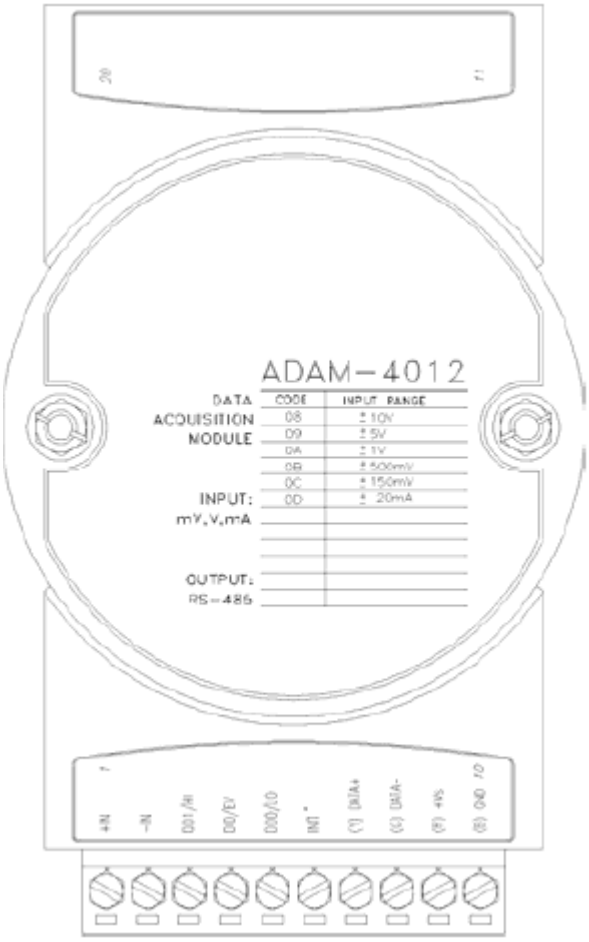

Figure 3.9 ADAM-4012 Analog Input Module

Accepts:

- Millivolt inputs ± 150 mV and ±500 mV
- Volt inputs: ±1 V, ±5 V and ±10 V
- Current input: ±20 mA (requires a 125 resistor)

Two digital output channels and one digital input channel are provided.

Depending on the module's configuration setting, it can forward the data to the host computer in one of the following formats:

- Engineering units (mV, V, or mA)
- Percent of full-scale range (FSR)
- Two’s complement hexadecimal

3.3.2 Application Wiring

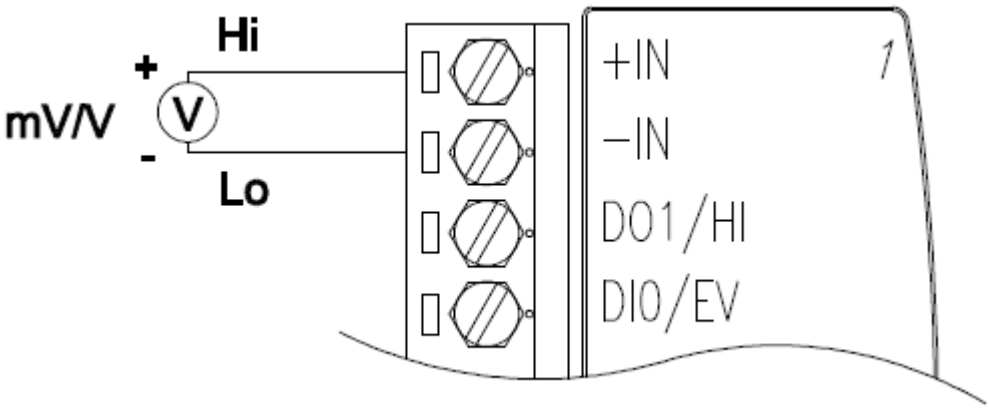

Figure 3.10 ADAM-4012 Millivolt and Volt Input Wiring Diagram

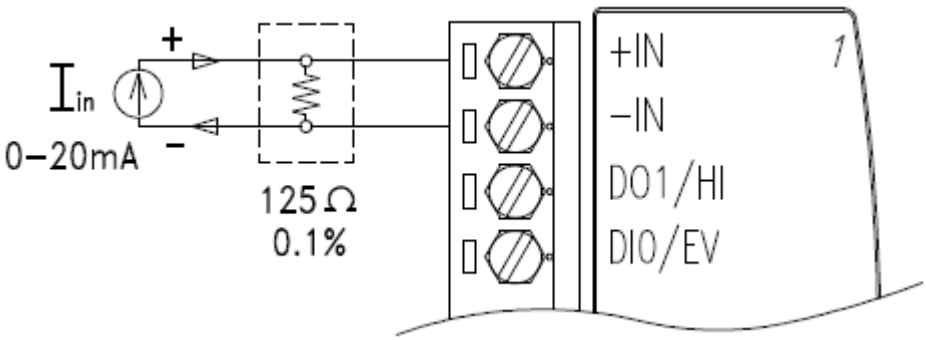

Figure 3.11 ADAM-4012 Process Current Input Wiring Diagram

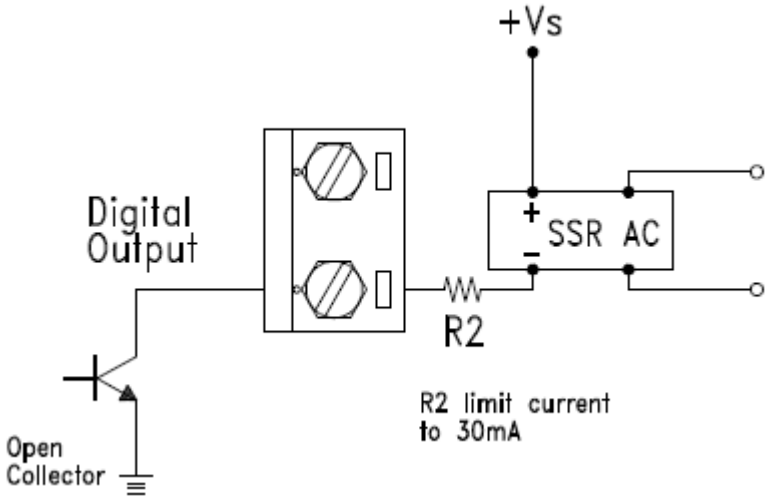

Figure 3.12 ADAM-4012 Digital Output Wiring Diagram Used with SSR (HI-LO alarm)

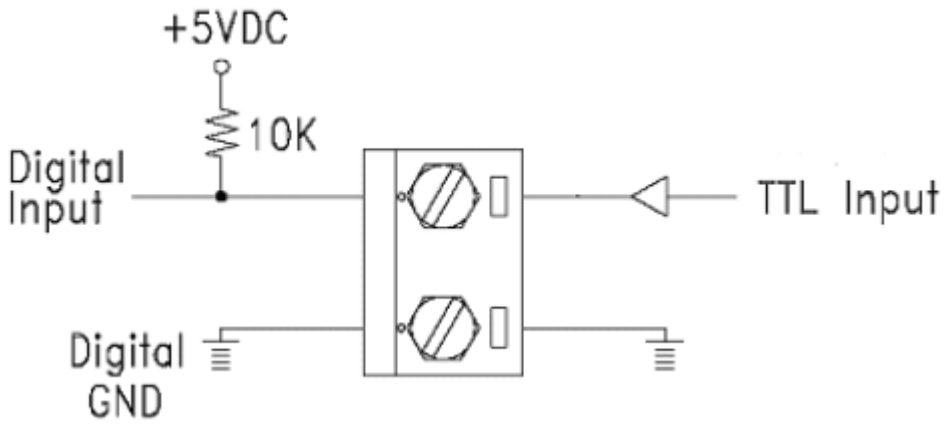

Figure 3.13 ADAM-4012 Digital Input Wiring Diagram Used with TTL

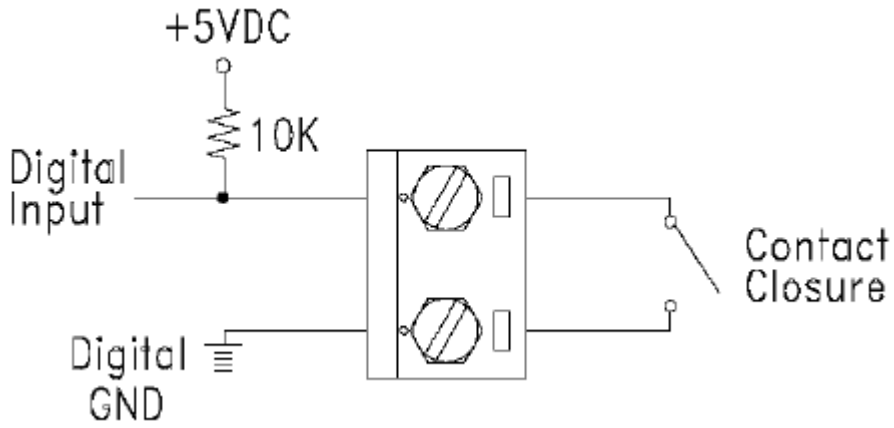

Figure 3.14 ADAM-4012 Digital Input Wiring Diagram Used with Dry contact

3.4 ADAM-4013 RTD Module

The ADAM-4013 RTD Input Module supports one Pt or Ni RTD input channel for temperature measurement. This module can accept RTD sensors with two, three, or four wires. The module offers signal conditioning, A/D conversion, ranging, and RS-485 digital communication functions. It protects your equipment from power surges at the ground terminal by providing opto-isolation of the A/D input and up to 3000 VDC transformer based isolation.

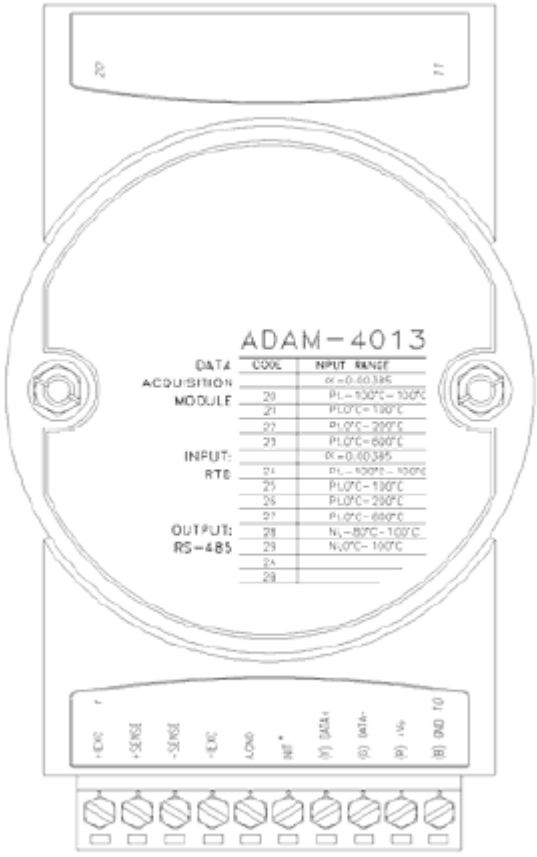

Figure 3.15 ADAM-4013 RTD Input Module

Accepts:

- Input from platinum and nickel RTDs

Depending on the module's configuration setting, it can forward the data to the host computer in one of the following formats:

- Engineering units (°C)
- Percent of full-scale range (FSR)
- Two's complement hexadecimal

3.4.1 Application Wiring

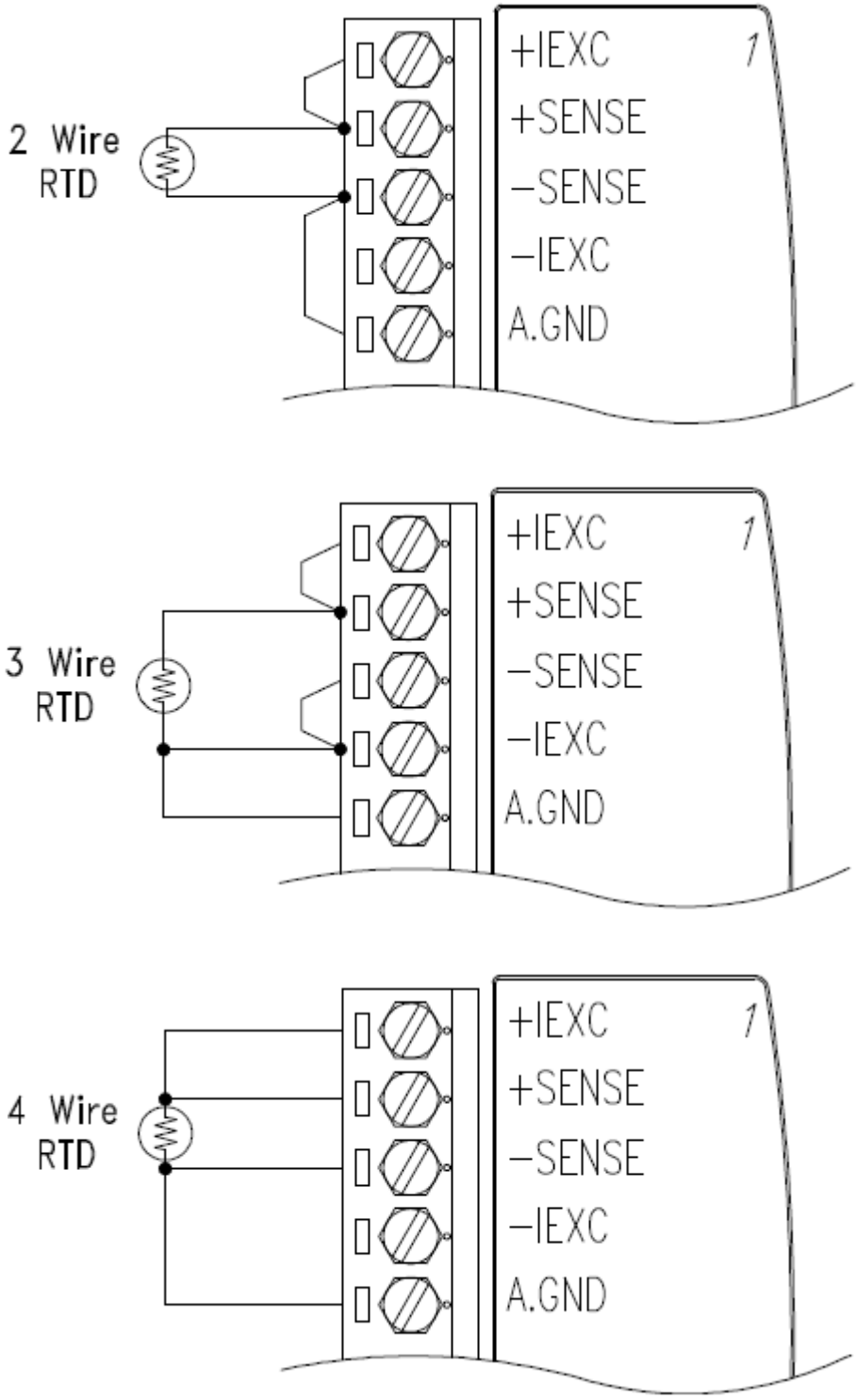

Figure 3.16 ADAM-4013 RTD Inputs Wiring Diagram

3.5 ADAM-4015 6-channel RTD Input Module

A RTD module is popularly used for temperature measurement. Unlike the traditional design, the ADAM-4015 RTD Input Module provides six RTD input channels for different types of RTD signal like as Pt, Ni, Balco. It is an effective solution in industrial & building automation. Normally, broken external wire will lead to an inaccurate current value; however, the ADAM-4015 provides a broken wire detecting function. Therefore, users can easily fix the broken wire problems. This module can accept RTD sensors that have two or three wires. After the V2.04 of ADAM-4015, ADAM-4015 can support the "BA1 -200~600°C".

Please be noted that the pin 26 is defined as GND and it's reserved.

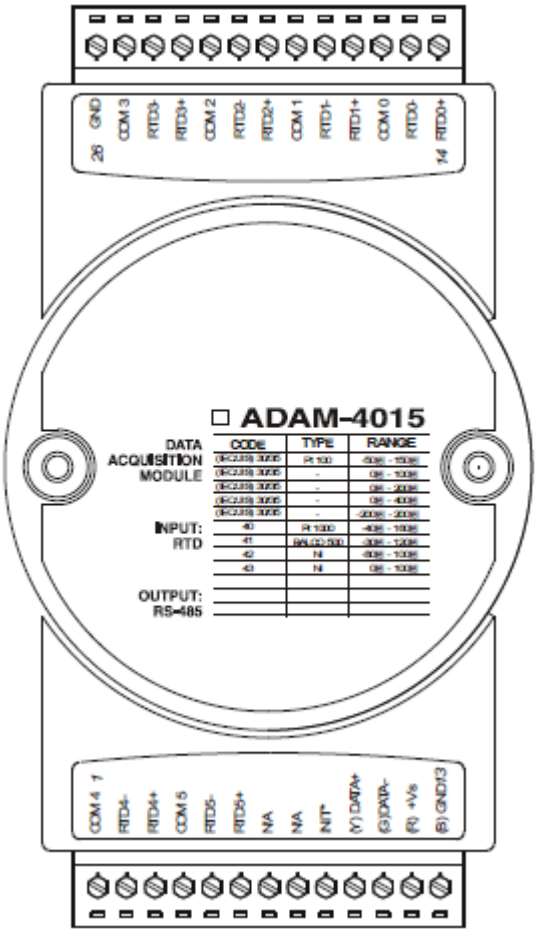

Figure 3.17 ADAM-4015 6-channel RTD Input Module

3.5.1 Application Wiring

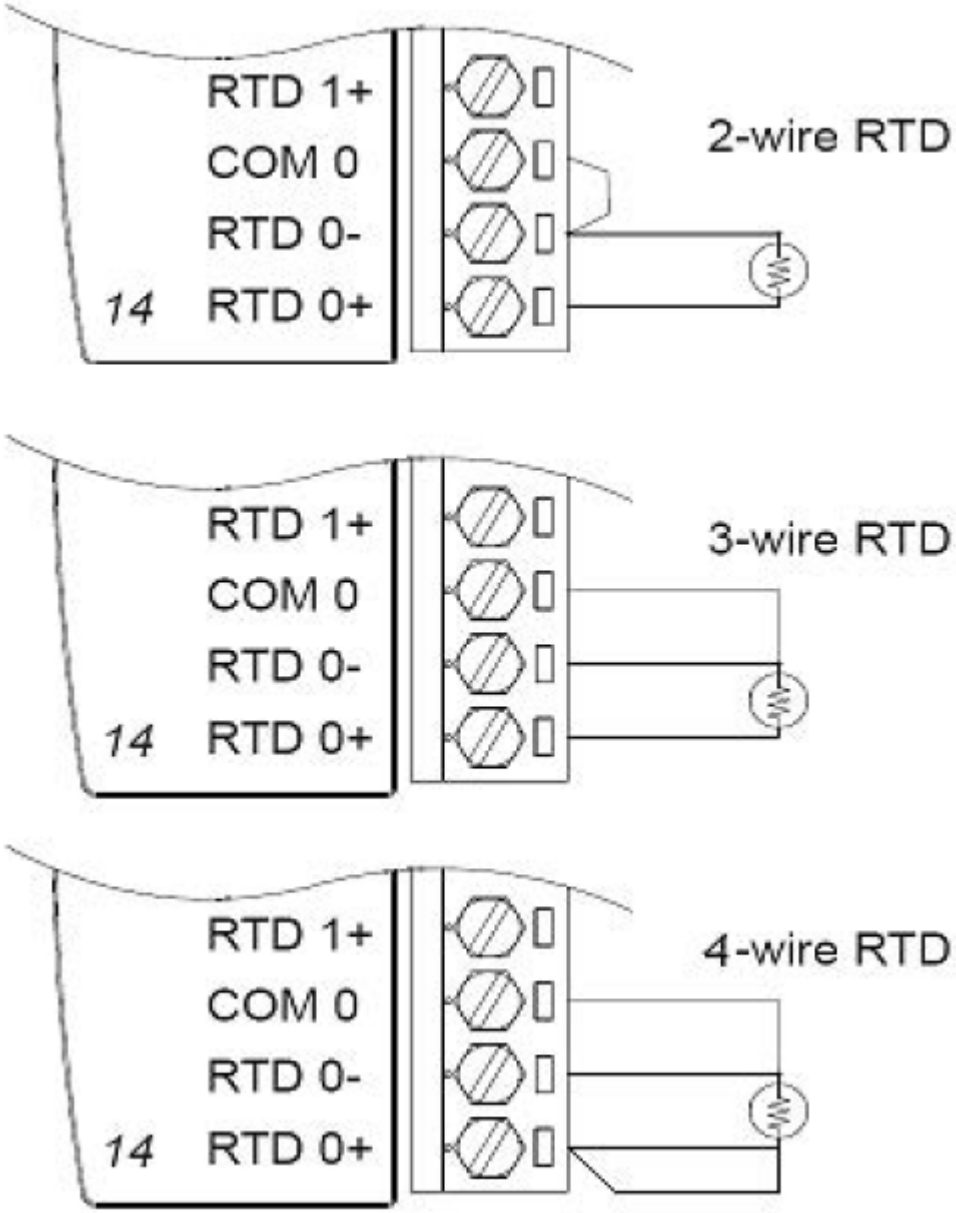

Figure 3.18 ADAM-4015 RTD Input Module Wiring Diagram

3.5.2 Technical specification of ADAM-4015

Table 3.1: Technical Specification of ADAM-4015	
Channel Number	6 differential
Support Protocol	ADAM ASCII and MODBUS/RTU
Input Type	Pt100, Pt1000, BALCO500, Ni
Input Connections	2 or 3 wires
Wire Burnout Detection	Yes
Input Type and Temperature Range	Pt100: -50 to 150° C 0 to 100° C 0 to 200° C 0 to 400° C -200 to 200° C Pt1000: -40 to 160° C Balco500: -30 to 120° C Ni 50 RTD: -80 to 100° C Ni 508 RTD: 0 to 100° C
Isolation Voltage	3000 V_{DC}
Sampling Rate	10 sample/second (total)
Input Impedance	10 MΩ
Resolution	16-bit
Accuracy	±0.1% or better
CMR@50/60Hz	120 dB
NMR@50/60Hz	100 dB
Span Drift	± 25 ppm/°C
Zero Drift	± 3 μV/°C
Watchdog Timer	System (1.6 second) and Communication
Power Input	+10~+30 V_{DC} (non-regulated)
Power Consumption	1.2 W @ 24V_{DC}

3.6 ADAM-4015T 6-channel Thermistor Input Module

A Thermistor Module is popularly used for temperature measurement. Unlike the traditional design, the ADAM-4015T provides six thermistor input channels for thermistor signal. It is an effective solution in industrial & building automation. Normally, broken external wires will lead to an inaccurate current value. The ADAM-4015T provides a broken wire detecting function, so users can easily fix the problems.

Figure 3.19 ADAM-4015T 6-channel Thermistor Input Module

3.6.1 Application Wiring

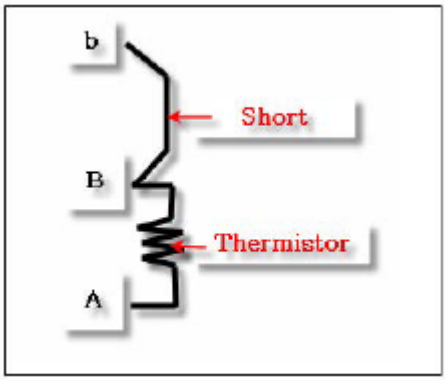

Figure 3.20 ADAM-4015T Thermistor Input Module Wiring Diagram

3.6.2 Technical Specification of ADAM-4015T

Table 3.2: Technical Specification of ADAM-4015T	
Channel Number	6 differential
Support Protocol	ADAM ASCII and MODBUS/RTU
Input Type	Thermistor
Input Connections	2 or 3 wires
Wire Burnout Detection	Yes
Input Type and Temperature Range	Thermistor 3k 0~100? (9.796K ohm ~ 203.8 ohm) Thermistor 10k 0~100?(29.49K ohm ~ 816.8 ohm)
Isolation Voltage	3000 V_{DC}
Sampling Rate	10 sample/second (total)
Input Impedance	10 MΩ
Resolution	16-bit
Accuracy	±0.1% or better
CMR@50/60Hz	120 dB
NMR@50/60Hz	100 dB
Span Drift	± 25 ppm/°C
Zero Drift	± 3 μV/°C
Watchdog Timer	System (1.6 second) and Communication
Power Input	+10~+30 V_{DC} (non-regulated)
Power Consumption	1.2 W @ 24V_{DC}

3.7 ADAM-4016 Analog Input/Output Module

A strain gauge input module uses a microprocessor-controlled integrating A/D converter to convert sensor voltage or current signals into digital data for load cell and stress measurement. The digital data are then translated into either, two's complement hexadecimal format or percentage of full-scale range (FSR) according to the module's configuration. When prompted by the host computer, the data are sent through a standard RS-485 interface.

The strain gauge input module offers signal conditioning, A/D conversion, ranging, and RS-485 digital communication functions.

They protect your equipment from power surges at the ground terminal by providing opto-isolation of the A/D input and up to 3000 VDC transformer based isolation.

Excitation Voltage Output

A strain gauge input module can supply single channel voltage output for excitation. The module receives digital input from the host computer, and the format of the data is engineering units. It then uses its microprocessor-controlled D/A converter to convert the digital data into output signals.

Strain gauge input modules protect your equipment from power surges at the ground terminal by providing opto-isolation of the D/A output and up to 3000 VDC transformer-based isolation.

Digital Outputs

A strain gauge input module also contains four digital outputs. Outputs are open-collector transistor switches that may be controlled by the host computer. They can control solid-state relays which can be applied to heaters, pumps, and other electrical controlled equipments.

Alarm signaling

Strain Gauge input modules include High and Low alarm functions. High and Low alarm limits may be downloaded into the module's EEPROM by the host computer.

The alarm functions can be enabled or disabled remotely. When the alarm function is enabled, both Digital Output channels are used to indicate the High and Low alarm states. Digital Output channel 1 (DO1) equals to High alarm state and Digital Output channel 0 (DO0) equals to Low alarm state. The High and Low alarm state can be read at any time by the host computer.

Every A/D conversion will be followed by a comparison with the High and Low limits. When the input value exceeds one of these limits, the High or Low alarm state is set to ON.

There are two alarm mode options, Momentary and Latching. If the alarm is in Latching mode, the alarm will stay on even when the input value returns within limits. An alarm in Latching mode can be turned OFF by issuing a Clear Alarm command from the host computer. A Latching alarm is cleared by the module when the opposite alarm is set.

When the module receives a value that is lower than the Low alarm limit, it will clear the High alarm and turn the Low alarm ON.

When the alarm is in Momentary mode, the alarm will be turned OFF as soon as the input value returns to within limits.

The arrangement of coupling High and Low alarm states with Digital Output lines may be utilized to build ON/OFF controllers that can operate without the host computer involvement.

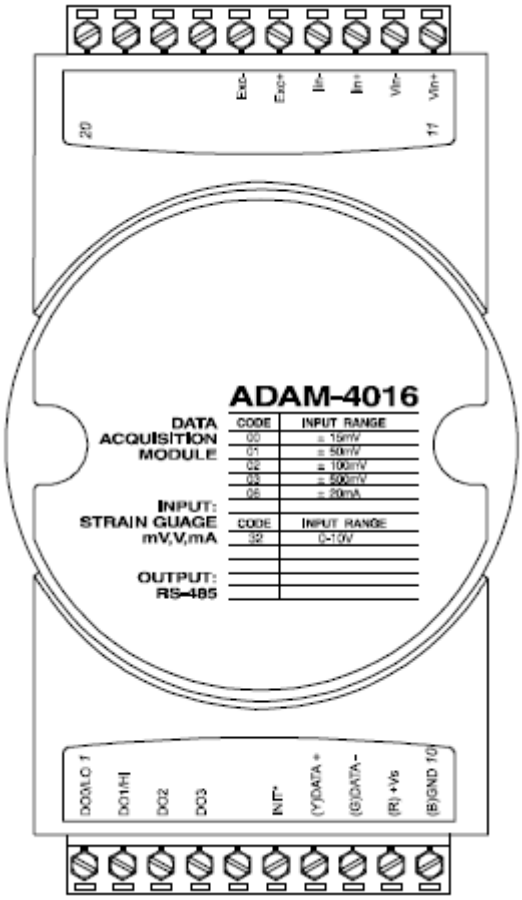

Figure 3.21 ADAM-4016 Analog Input/Output Module

Accepts:
- Millivolt inputs: ±15 mV, ±50 mV, ±100 mV, ±500 mV
- Current input: ±20 mA

Excitation voltage output: 0 ~ 10 V

Four digital output channels are provided.

Depending on the module's configuration setting, it can forward the data to the host computer in one of the following formats:
- Engineering units (mV or mA)
- Percent of full-scale range (FSR)
- Two's complement hexadecimal

3.7.1 Application Wiring

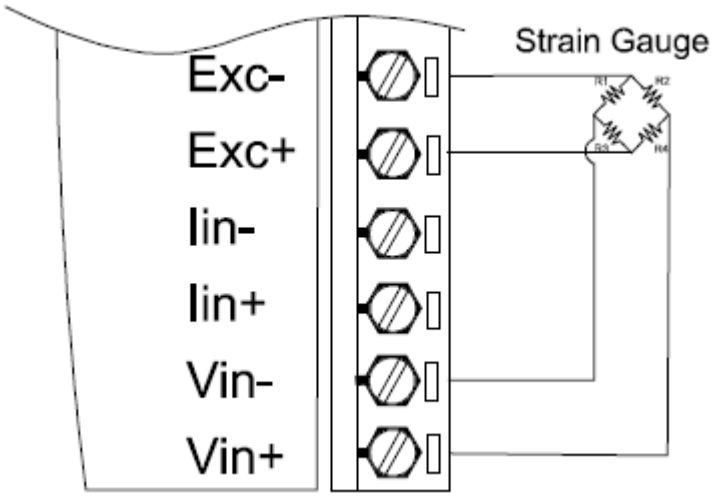

Figure 3.22 ADAM-4016 Strain Gauge Voltage Input Wiring Diagram

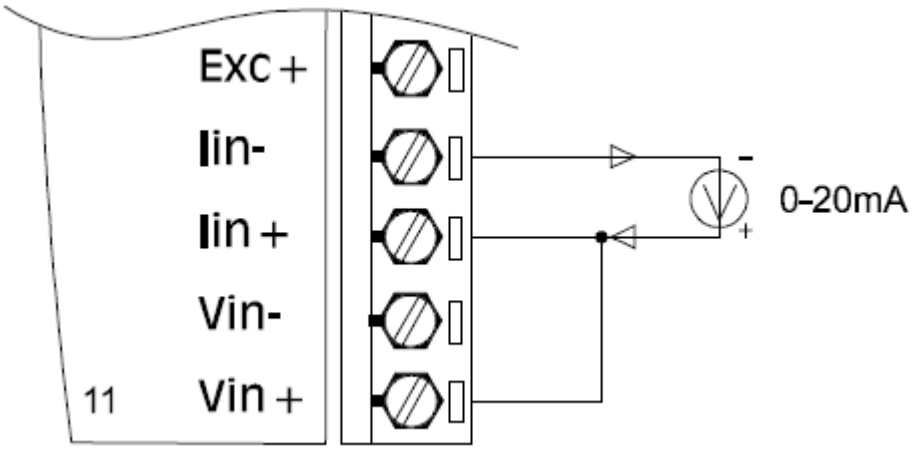

Figure 3.23 ADAM-4016 Strain Gauge Current Input Wiring Diagram

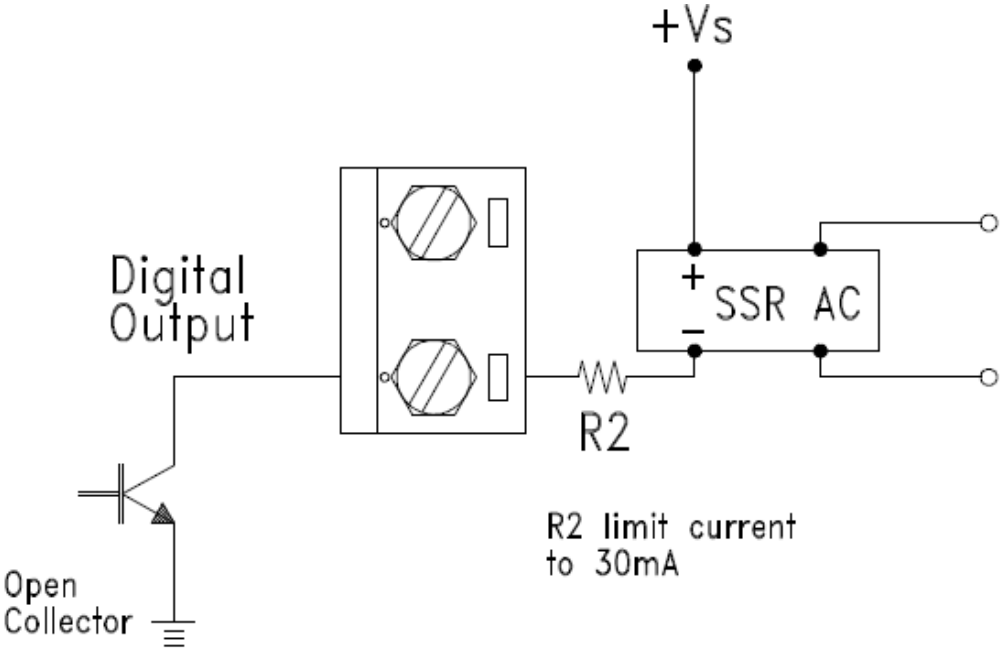

Figure 3.24 ADAM-4016 Digital Output Wiring Diagram Used with SSR

3.8 ADAM-4017/4017+/4018/4018M/4018+ 8-channel Analog Input Modules

3.8.1 ADAM-4017/4018 8-channel Analog Input Module

The ADAM-4017/4018 is a 16-bit, 8-channel analog input module that provides programmable input ranges on all channels. This module is an extremely cost-effective solution for industrial measurement and monitoring applications. Its opto-isolated inputs provide 3000 VDC of isolation between the analog input and the module, and protect the module and peripherals from damaging due to high input-line voltages.

The ADAM-4017/4018 offers signal conditioning, A/D conversion, ranging and RS-485 digital communication functions. The module protects your equipment from power surges at the ground terminal by providing opto-isolation of A/D input and up to 3000 VDC transformer based isolation.

The ADAM-4017/4018 uses a 16-bit microprocessor-controlled sigma-delta A/D converter to convert sensor voltage or current into digital data. The digital data are then translated into engineering units.

When prompted by the host computer, the module sends the data to the host through a standard RS-485 interface.

3.8.2 ADAM-4018M 8-channel Analog Input Data logger

The ADAM-4018M is a 16-bit, 8-channel analog input data logger featuring programmable input ranges on all channels. This reliable and easy to use analog input logger can store up to 38,000 measurements for a maximum duration of 20 years.

The ADAM-4018M can accept various analog inputs such as thermocouple, mV, V and mA. It also offers three configurable logging modes, standard log, event log, and mixed log. Optically isolated inputs provide 3000 VDC of isolation between the module and the analog input, and protect the module and peripherals from damaging due to high voltages on the input lines.

The ADAM-4018M is an extremely cost-effective solution for industrial measurement and monitoring applications.

3.8.3 ADAM-4017+ 8-channel Differential Analog Input Module

Here comes a solution to the demand for more analog input channels.

Similar to its counterpart, the ADAM-4017+ enables eight differential channels with multiple input ranges. This multi-channel/multi-range structure allows channels with different input ranges at the same time.

For example, channel 1 can have the range ± 5V meanwhile the others are ± 10V and ± 20 mA.

Instead of leaving two single-ended channels in ADAM-4017 module due to the limit number of pins, ADAM-4017+ uses a switch to switch AGND and INIT* to Vin6- and Vin7- respectively to allow 8- channel input. Moreover, the ADAM-4017+ has been expanded to accept 4 ~ 20 mA, so the user can employ it in various applications

3.8.4 ADAM-4018+ 8-channel Thermocouple Input Module

Here comes a solution to the demand for more thermocouple input channels. Similar to its counterpart, the ADAM-4018+ enables eight differential channels with multiple input types. This multichannel/ multi-type structure allows synchronizing channels with different types of input. For example, channel 1 has K type of input meanwhile the others have R and S types.

ADAM-4018+ is an 8-channel T/C input module. Comparing with the universal analog input module ADAM-4019, it is more dedicated to T/C and 4 ~ 20 mA inputs for those with special request. It improves ADAM-4018 with the traditional design of six differential and two single-ended channels. It also enhances the steadiness and reliability of the wiring. Normally, broken external wires will lead to an inaccurate current value. ADAM-4018+, however, provides burned-out detection that allows users to fix the problems easily. ADAM 4018+ has build in Shunt.

3.8.5 ADAM-4017 8-channel Analog Input Module

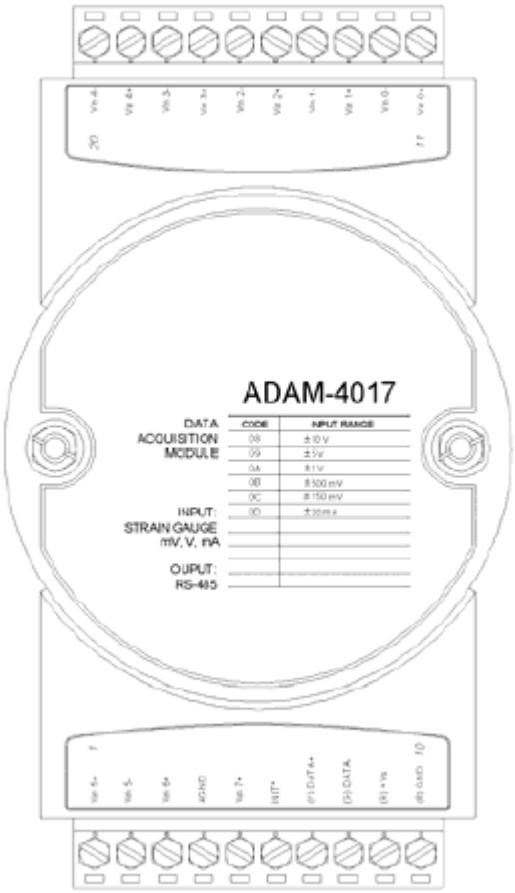

Figure 3.25 ADAM-4017 8-channel Analog Input Module

Channels:

- Six differential, two single-ended

Accepts:

- Millivolt inputs: ±150 mV and ±500 mV
- Volt inputs: ±1 V, ±5 V, and ±10 V
- Current input: ±20 mA (requires a 120 resistor)

The module forwards the data to the host computer in engineering units (mV, V or mA)

3.8.6 ADAM-4017+ 8-channel Differential Analog Input Module

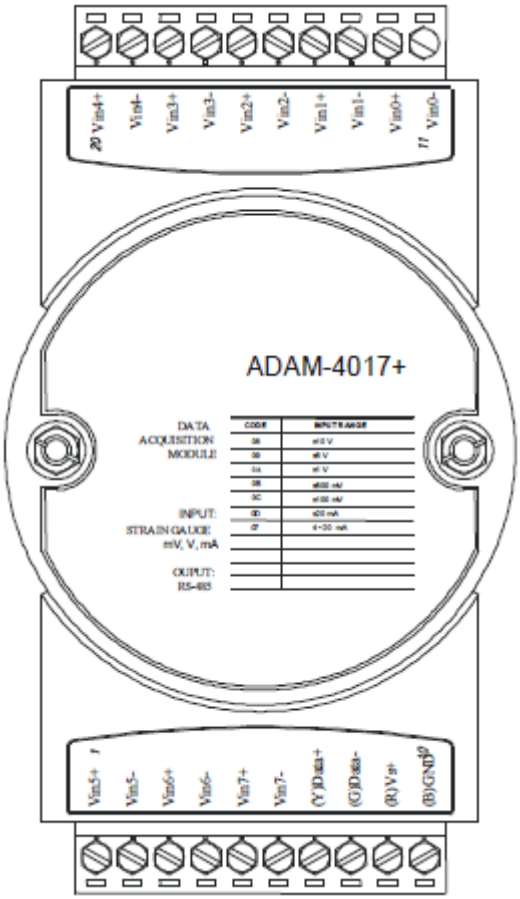

Figure 3.26 ADAM-4017+ 8-ch. differential analog input module

Jumper setting (ADAM-4017+)

1. JP0~JP7

JP0~JP7		20 mA Input Range							
		Voltage Input range							
Mapping to Channel		Ch.0	Ch.1	Ch.2	Ch.3	Ch.4	Ch.5	Ch.6	Ch.7
		JP 0	JP 1	JP 2	JP 3	JP 4	JP 5	JP 6	JP 7

2. JP12 can Enable/Disable Watchdog Timer Function. The default setting is closed, i.e., Watchdog Timer Function Enabled. Please always keep JP12 closed and enable/disable the watchdog timer function in ADAM-utility.

3.8.6.1 Technical Specification of ADAM-4017+

Table 3.3: Technical Specification of ADAM-4017+	
Channel	8
Input Type	mV, V, mA
Input Range	±150 mV, ±500 mV, ±1 V, ±5 V, ±10 V, ±20 mA, 4 ~ 20 mA Current Input doesn't need an external resistor
Isolation Voltage	3000 V_{DC}
Fault and Over-voltage	protection With stands over-voltage up to ±35 V
Sampling Rate	10 sample/sec (total)
Input Impedance	Voltage: 20 MΩ, Current: 120Ω
Accuracy	±0.1% or better
Power Consumption	1.2 W @ 24V_{DC}
I/O Connector Type	10 pin plug-in terminal
Span drift	Current Input: ±30 ppm/^{o}C Voltage Input: ±25 ppm/^{o}C

3.8.7 ADAM-4018 8-channel Analog Input Module

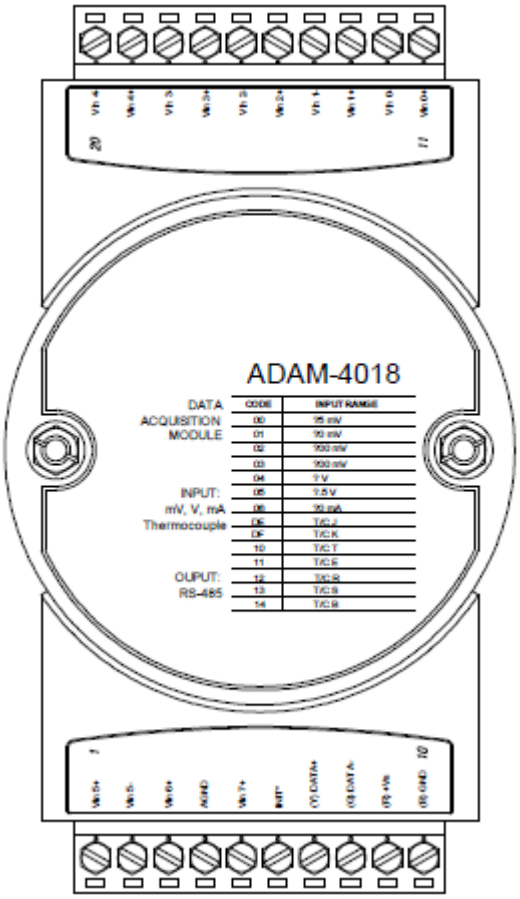

Figure 3.27 ADAM-4018 8-channel Thermocouple Input Module

Channels:

- Six differential, two single-ended

Accepts:

- J, K, T, E, R, S and B thermocouples
- Millivolt inputs: ±15 mV, ±50 mV, ±100 mV and ±500 mV
- Volt inputs: ±1 V and ±2.5 V
- Current input: ±20 mA (requires a 125 resistor)

The module forwards the data to the host computer in engineering units (°C, mV, V or mA)

3.8.8 ADAM-4018M 8-channel Analog Input Data logger

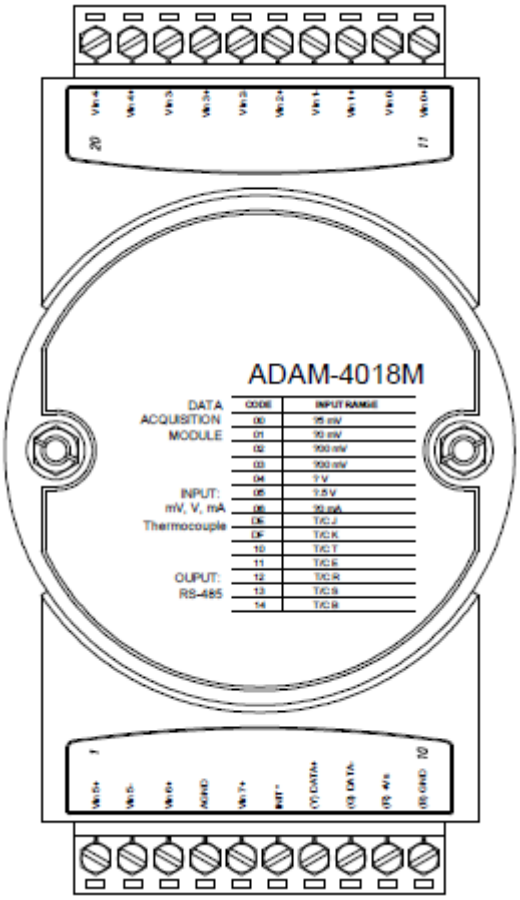

Figure 3.28 ADAM-4018M 8-channel Analog Input Data Logger

Channels:
- Six differential, two single-ended

Accepts:
- J, K, T, E, R, S and B thermocouples
- Millivolt inputs: ±15 mV, ±50 mV, ±100 mV, ±500 mV
- Volt inputs: ±1 V and ±2.5 V
- Current input: ±20 mA (requires a 125 resistor)

The module forwards the data to the host computer in engineering units (°C, mV, V, or mA)

Storage Capacity:
- 128 KB flash memory

3.8.9 ADAM-4018+ 8-channel Thermocouple Input Module

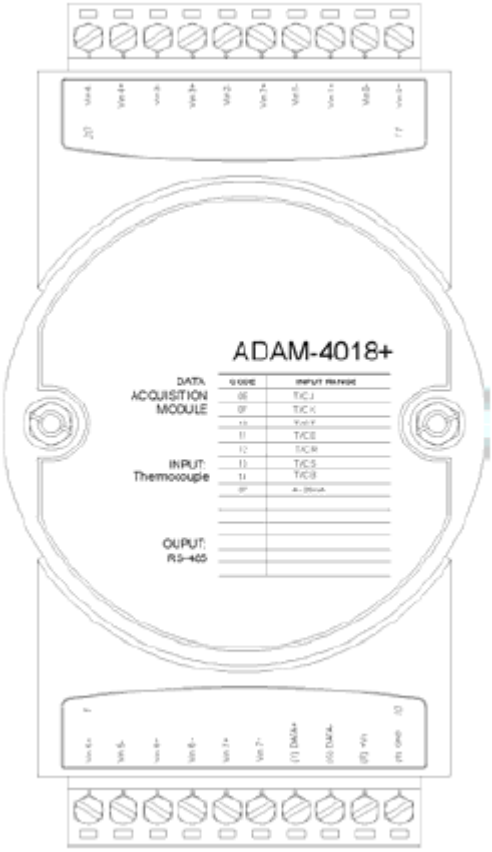

Figure 3.29 ADAM-4018+ 8-ch. thermocouple input module

JP0~ JP7	■ ■ □ △	4~20 mA Input Range							
	□ ■ ■ △	Voltage Input range							
Mapping to Channel		Ch.0	Ch.1	Ch.2	Ch.3	Ch.4	Ch.5	Ch.6	Ch.7
		JP 0	JP 1	JP 2	JP 3	JP 4	JP 5	JP 6	JP 7

3.8.9.1 Technical specification of ADAM-4018+

Table 3.4: Technical specification of ADAM-4018+	
Channel	8
Input Type T	hermocouple
Input range and T/C type	±20 mA, 4~20 mA J 0 ~ 760° C K 0 ~ 1370° C T -100 ~ 400° C E 0 ~ 1000° C R 500 ~ 1750° C S 500 ~ 1750° C B 500 ~ 1800° C
Isolation Voltage	3000 V_{DC}
Fault and over-voltage protection	Withstands over voltage up to ±35 V
Sampling Rate	10 sample/sec (total)
Input Impedance	Voltage: 20 MΩ, Current: 120Ω
Accuracy	±0.1% or better
Power Consumption	0.8 W @ 24V_{DC}
I/O Connector Type	10 pin plug-in terminal

3.8.10 Application Wiring

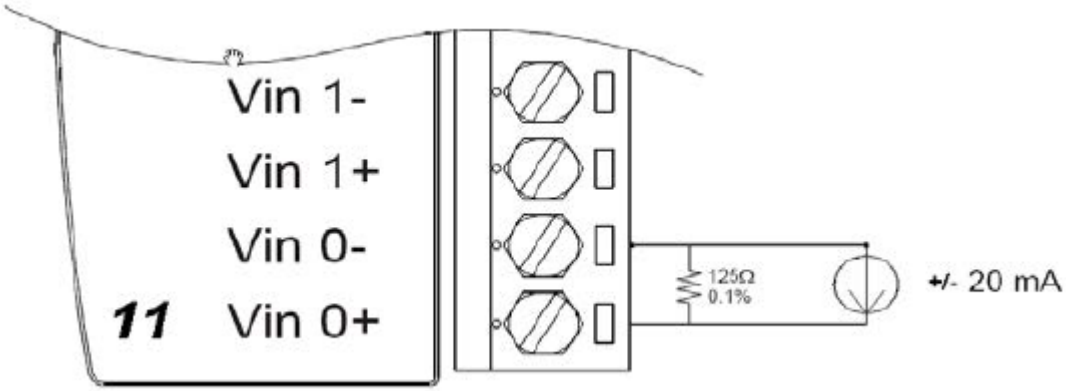

Figure 3.30 Current Input Wiring Diagram of ADAM-4017

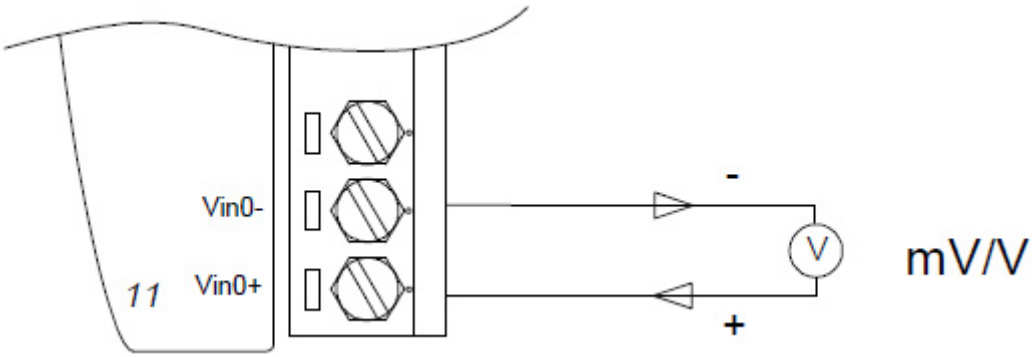

Figure 3.31 ADAM-4017 Differential Input Wiring Diagram (Ch0 ~ Ch5)

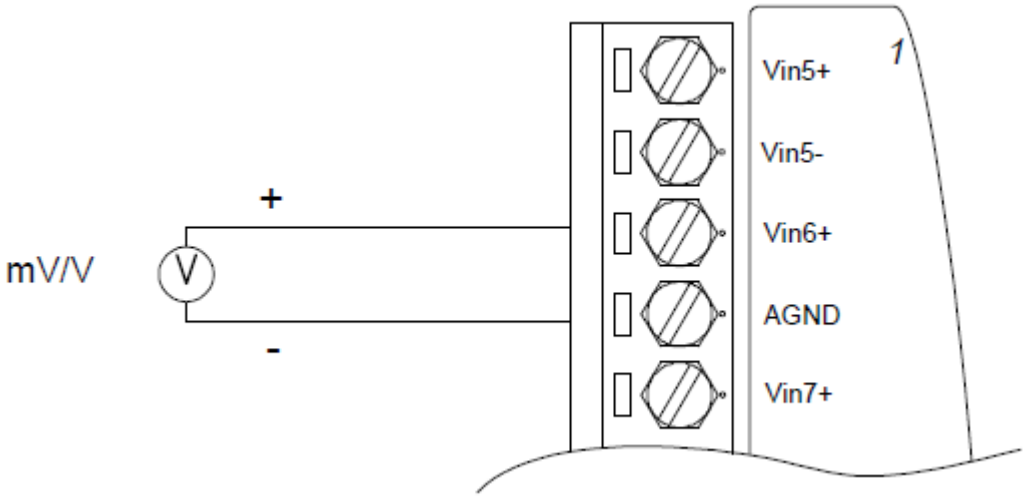

Figure 3.32 ADAM-4017 Single-ended Input Wiring Diagram (Ch6 and Ch7)

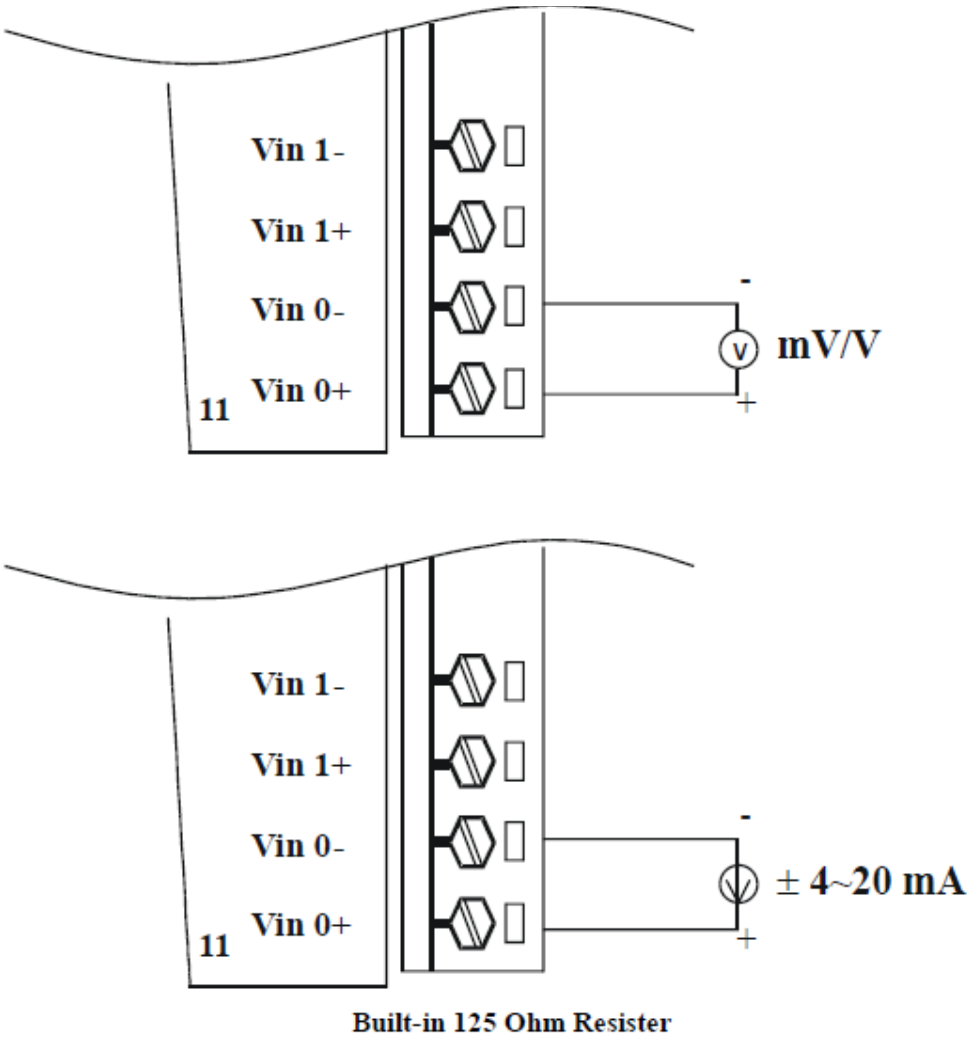

Figure 3.33 ADAM-4017+ Voltage and Current Input Wiring Diagram

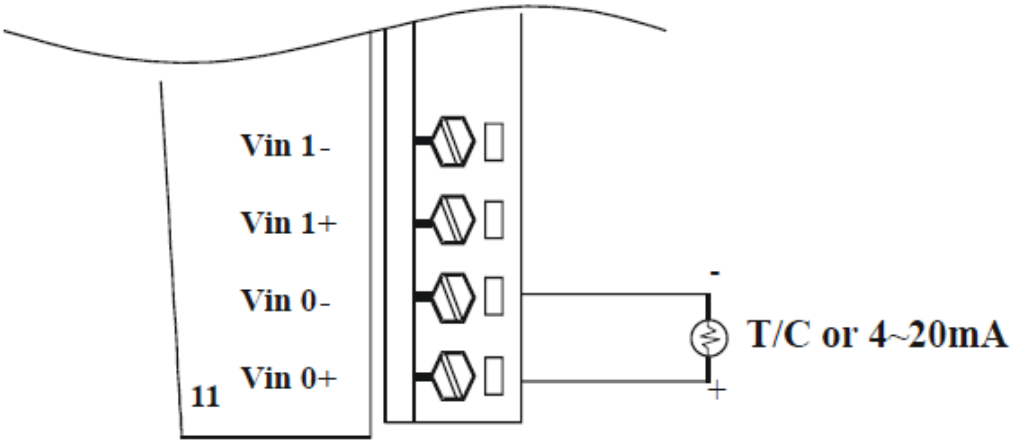

Figure 3.34 ADAM-4018+ Thermocouple Input Wiring Diagram

3.9 ADAM-4019+ 8-channel Universal Analog Input Module

The ADAM-4019+ is universal analog input module to integrate with various AI modules into one. It not only reduces the hardware cost, but also simplifies the wiring complexity. Furthermore, the ADAM- 4019+ provides the burnt-out detection functionality for 4~20mA and all thermocouple input.

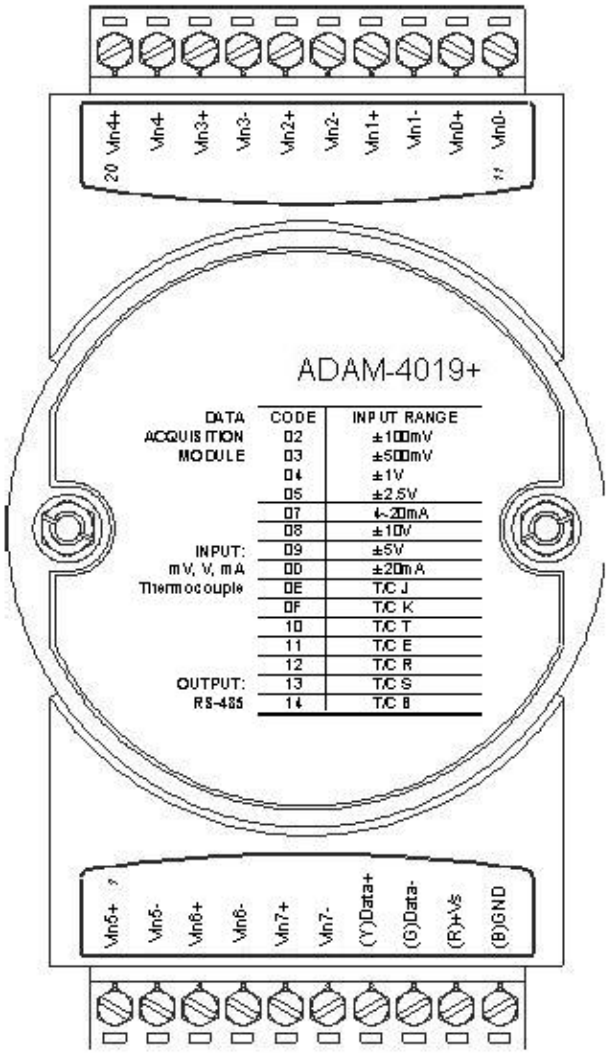

Figure 3.35 ADAM-4019+ 8-channel Universal Analog Input

The jumper setting of ADAM-4019+ for input type selection:

JP0~JP7	■■□	20mA Input Range							
	□■■	Voltage Input range							
Mapping to Channel		Ch.0	Ch.1	Ch.2	Ch.3	Ch.4	Ch.5	Ch.6	Ch.7
		JP 0	JP 1	JP 2	JP 3	JP 4	JP 5	JP 6	JP 7

***It is built the 120Ω resister inside under current input mode.**

3.9.1 Application Wiring

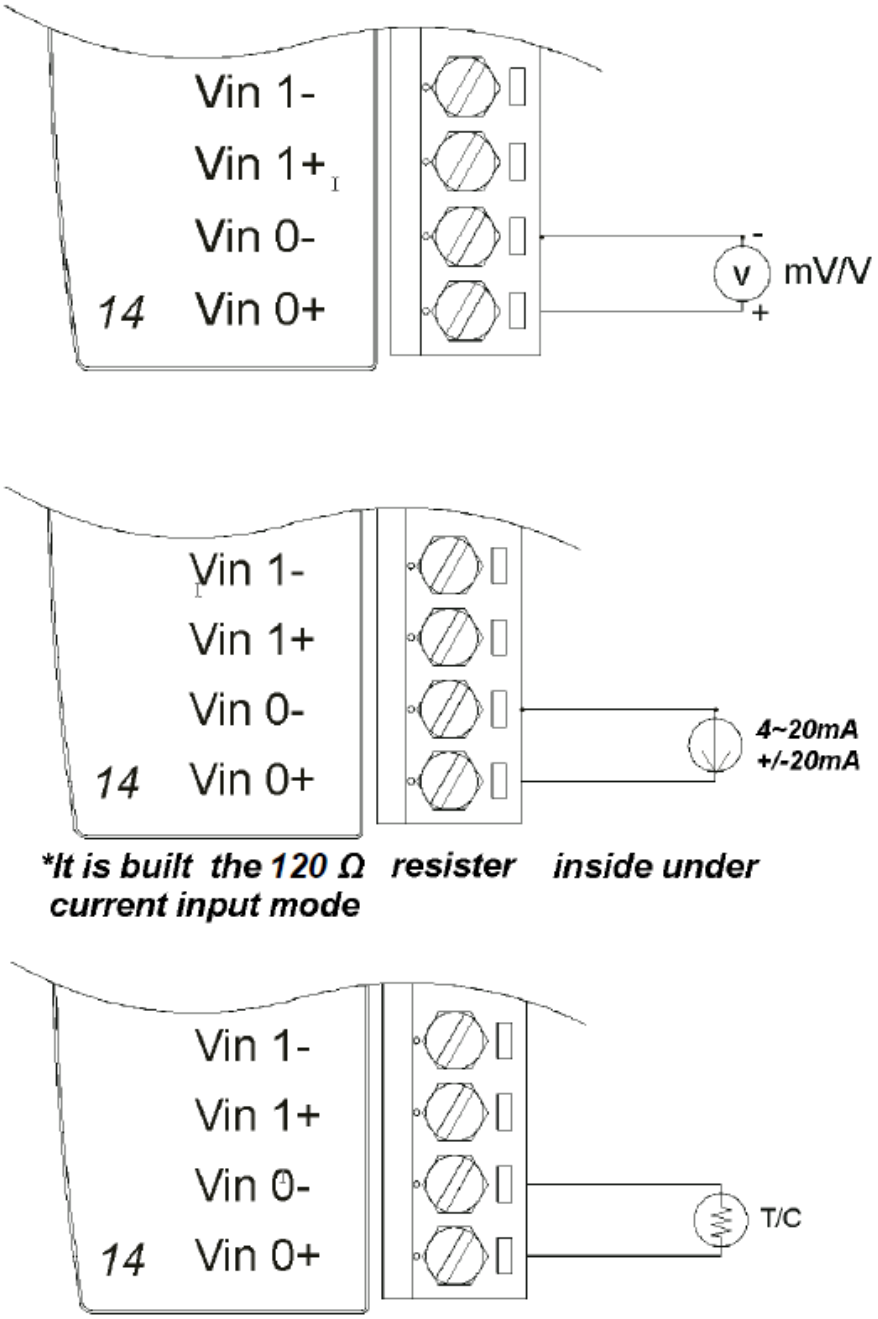

Figure 3.36 ADAM-4019+ Universal Analog Input Wiring Diagram

3.9.2 Technical Specification of ADAM-4019+

Table 3.5: Technical Specification of ADAM-4019+	
Channel	8
Resolution	16 bits
Input Type	V, mV, mA, T/C
Input type and temperature range	V: ±1 V , ±2.5 V, ±5 V , ±10 V mV: ±100 mV , ±500 mV mA: ±20 mA (with 120 Ω resister) 4~20mA (with 120 Ω resister) Thermocouple: J 0 to 760 °C K 0 to 1370 °C T -100 to 400 °C E 0 to 1000 °C R 500 to 1750 °C S 500 to 1750 °C B 500 to 1800 °C
Isolation Voltage	3000 VDC
Sampling Rate	10 samples/sec (total)
Input Impedance	Voltage: 20 MΩ, Current: 120Ω
Accuracy	±0.1% or better
Power Consumption	1.0W @ $24V_{DC}$
I/O Connector Type	10 pin plug-in terminal
Burn-out Detection	4~20mA and all thermocouple input

3.10 ADAM-4021 Analog Output Module

Analog output module receives its digital input through an RS-485 interface from the host computer. The format of the data is either two's complement hexadecimal format or percentage of full-scale range (FSR), depending on the module's configuration. It then uses its microprocessor-controlled D/A converter to convert the digital data into output signals.

You will get a true read-back of the analog output signal from the unit's ADC, which monitors the output independently. You can also specify slew rates and start up currents through the configuration software. The Analog Output Module can supply single-channel analog output in a range of voltages or currents.

Furthermore, it will protect your equipment from power surges at the ground terminal by providing opto-isolation of the D/A output and up to 3000 VDC transformer based isolation.

Slew Rate

The slew rate is defined as the discrepancy between the present number of milliamps (or Volts) per second and the required output currents (or voltages). An ADAM analog output module may be configured for a specific slew rate.

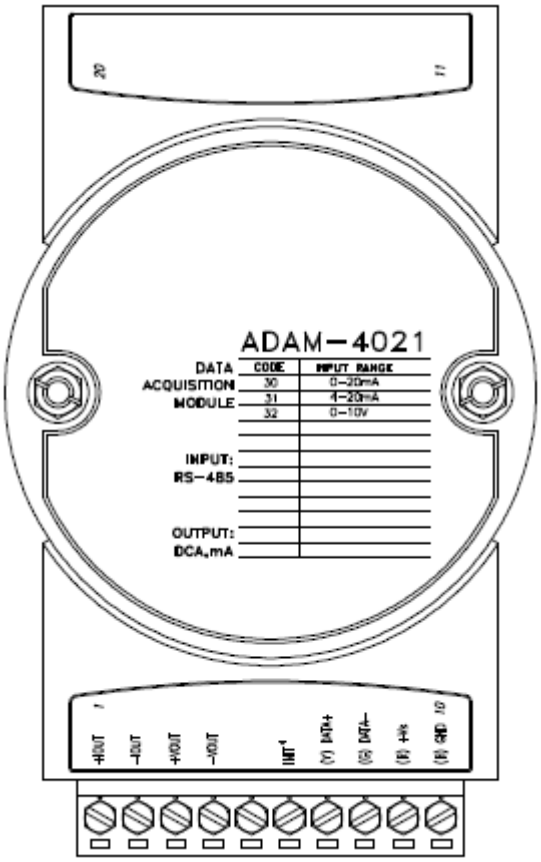

Figure 3.37 ADAM -4021 Analog Output Module

Depending on its configuration settings the module accepts the following formats from the host computer:

- Engineering units
- Percent of full-scale range (FSR)
- Two's complement hexadecimal format,

Output types:

- Voltage: 0 ~ 10 V
  (Slew rate: 0.0625 to 64 V/sec)
- Currents: 0 ~ 20 mA, or 4 ~ 20 mA.
  (Slew rate: 0.125 to 128 mA/sec)

3.10.1 Application Wiring

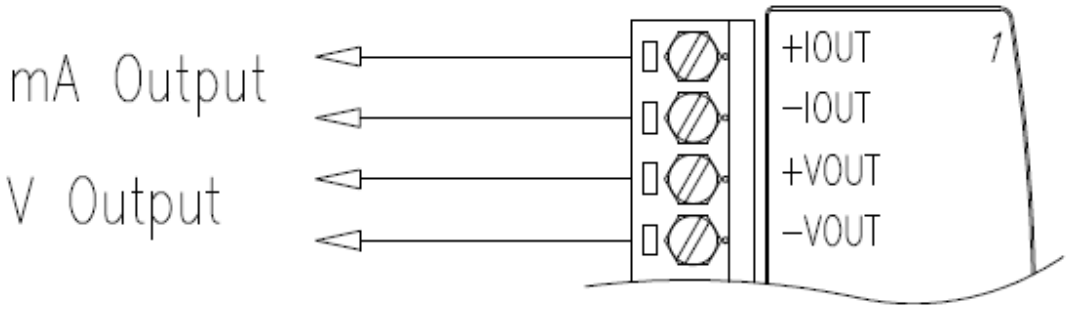

Figure 3.38 ADAM-4021 Analog Output Wiring Diagram

3.11 ADAM-4024 4-channel Analog Output Module

ADAM-4024 is a 4-channel analog output module with mixed type I/O. Under some circumstances, it is, however, a demand for multiple analog outputs to fulfill particular applications without many duplicate modules. ADAM-4024 is designed to achieve this purpose by integrating four A/O channels and four isolated D/I channels into only one module. The four digital input channels function as an interlock for emergency latch output.

ADAM-4024 inherited from ADAM-4021, but provide multi-range AO support, allows its four A/O channels working at the same time with different and more output ranges. For example, it can have 4~20 mA and ±10 V at its output. To ensure the operation of machines and facilities, ADAM-4024 has the functionality of slew rate control. Output slope is programmable through ramping/clamping the slew rate. Unlike traditional mechanism, ADAM-4024 permits users to substitute its default value at the start up. Users can easily set up and configure the module to be more adaptive.

Figure 3.39 ADAM-4024 4-channel Analog Output Module

3.11.1 Technical specification of ADAM-4024

- Resolution: 12-bit
- Output Type: mA, V (Differential)
- Output Range: 0~20 mA, 4~20 mA, and ±10V
- Isolation Voltage: 3000 V_{DC}
- Output Impedance: 0.5 Ω
- Accuracy:
  - ±0.1% of FSR for current output
  - ±0.2% of FSR for voltage output
- Zero Drift:
  - Voltage output: ±30 μV/°C
  - Current output: ±0.2 μA/°C
- Span Temperature Coefficient: ±25 ppm/°C
- Output Slope Rate:
  - 0.125 ~ 128 mA/sec.
  - 0.0625 ~ 64 V/sec.
- Current Load Resistor:Max. 500Ω
- Voltage Load Resistor:Min. 1K Ω
- Built-in Watchdog Timer
- Isolation Digital Input
  - Channel: 4
  - Level 0: +1V max
  - Level 1: +10~30 V_{DC}

3.11.2 Application Wiring

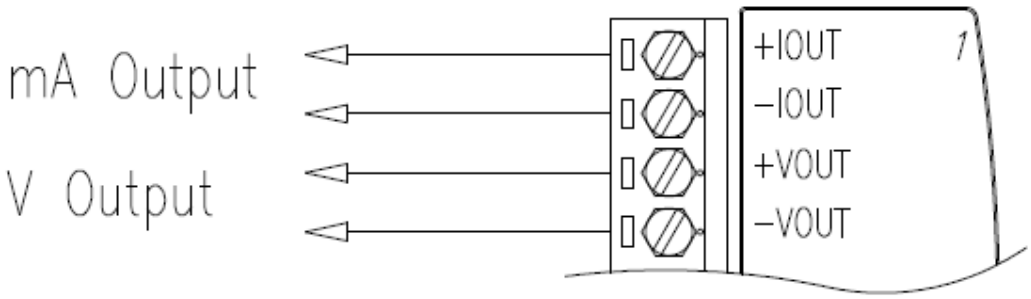

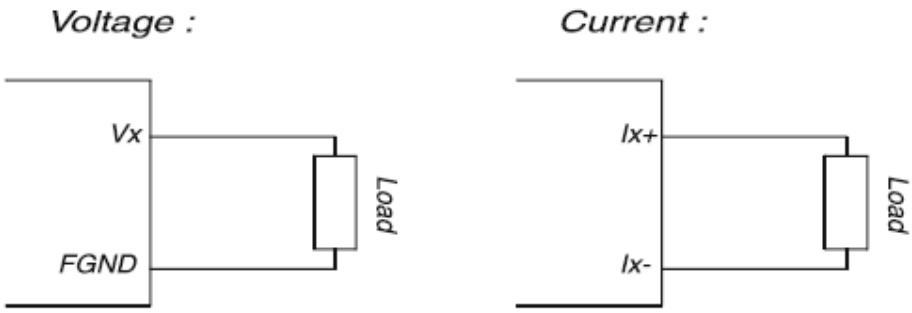

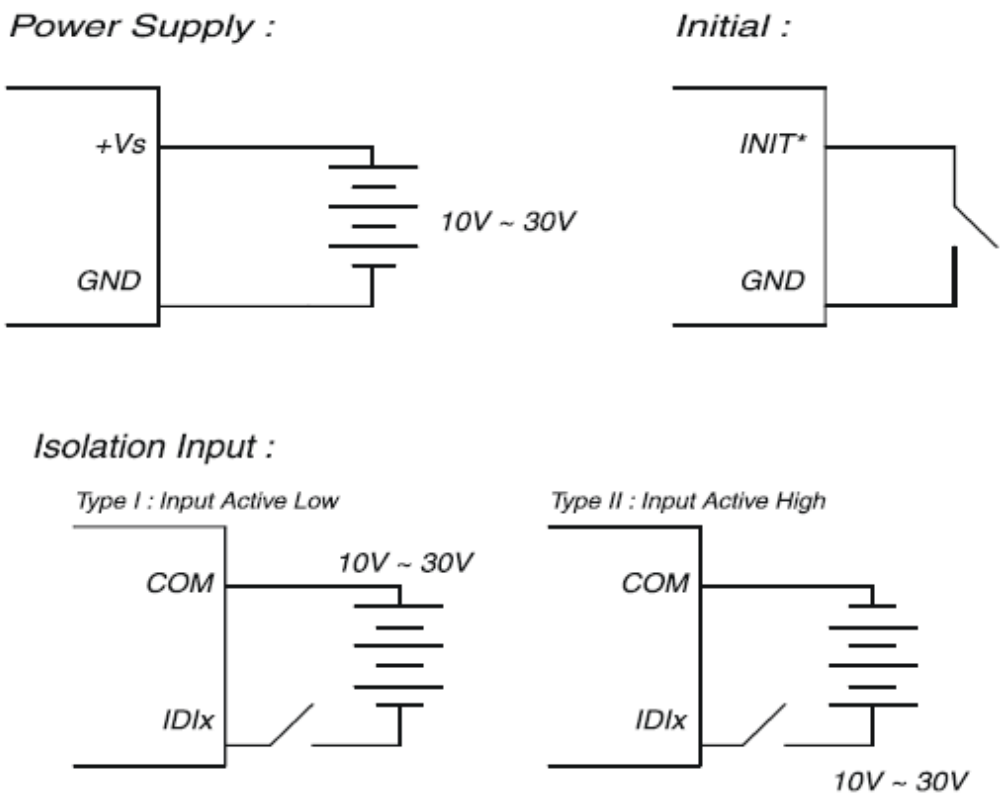

Figure 3.40 ADAM-4024 Pin Define and Wiring Diagram

3.12 ADAM-4050 Digital I/O Module

The ADAM-4050 features seven digital input and eight digital output channels. The outputs are open-collector transistor switches that you can control from the host computer. You can also use the switches to control solid-state relays, which can be applied to equipments such as heaters and pumps. The host computer can use the module's digital inputs to determine the states of limit, safety switches, and remote digital signals.

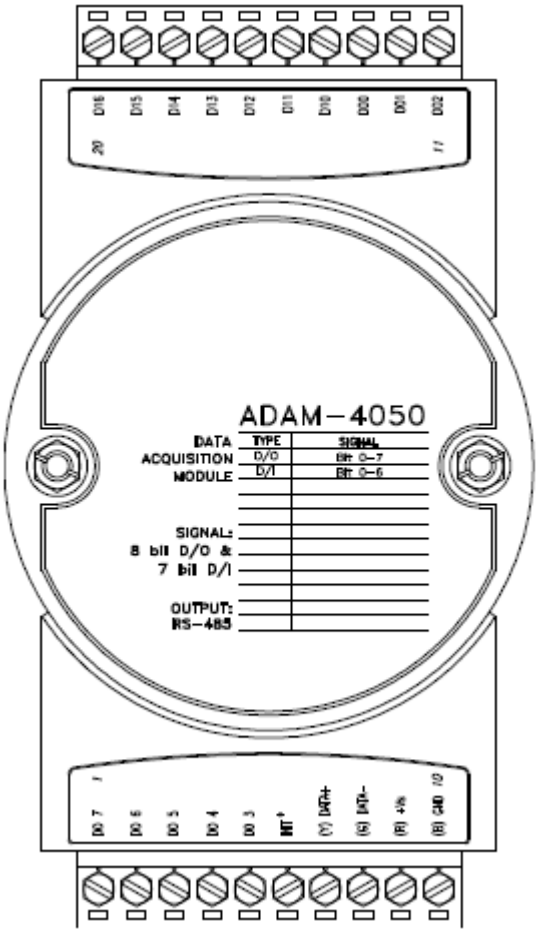

Figure 3.41 ADAM-4050 Digital I/O Module

Channels:
- 7 input channels
- 8 output channels

Digital Input:
- Logic level 0: +1 V max.
- Logic level 1: +3.5 ~ 30 V

Digital Output:
- Open collector to 30 V, 30 mA max. load

3.12.1 Application Wiring

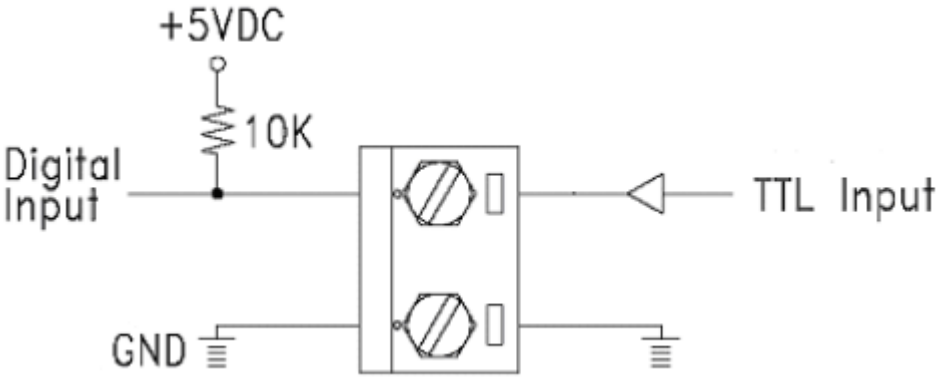

Figure 3.42 ADAM-4050 TTL Input Wiring Diagram

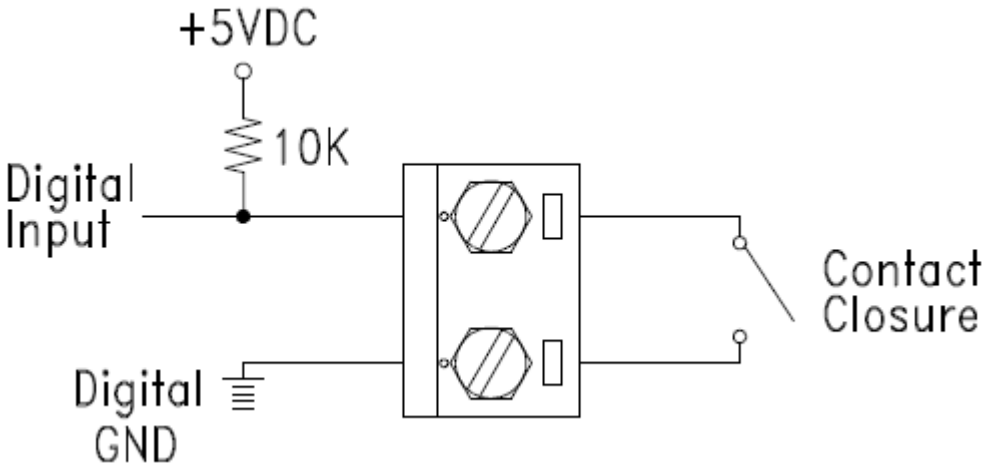

Figure 3.43 ADAM-4050 Contact Closure Input Wiring Diagram

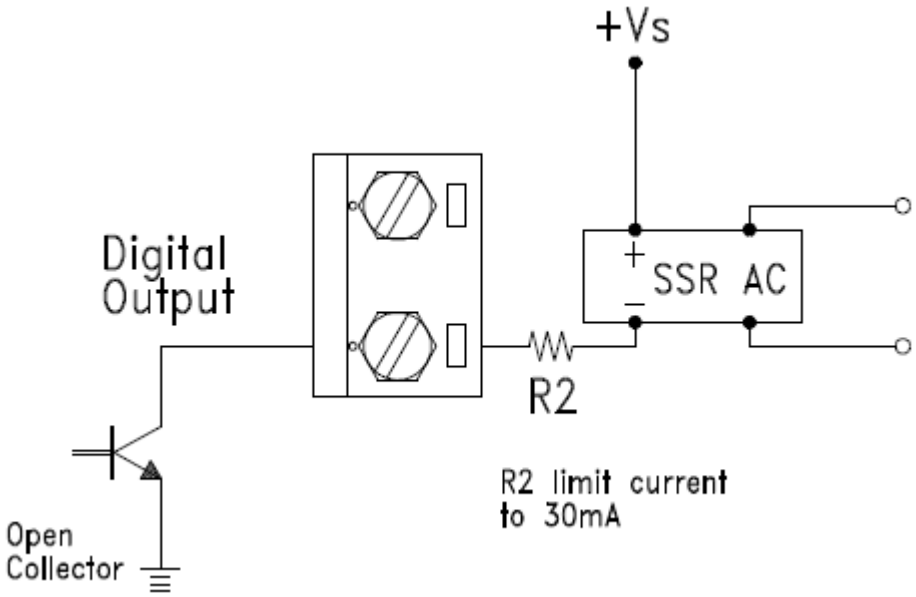

Figure 3.44 ADAM-4050 Digital Output Wiring Diagram Used with SSR

3.13 ADAM-4051 16-channel Isolated Digital Input Module

The ADAM-4051 is a 16 channel Digital Input Module. It is built with 2500VDC optical isolation, and it is suitable for critical applications. The main difference from other modules is that ADAM-4051 accepts 10 ~ 50V input voltage to fit various digital signals like 12 V, 24 V, and 48 V. Moreover, users can read the current status from the LED indicators on the front panel.

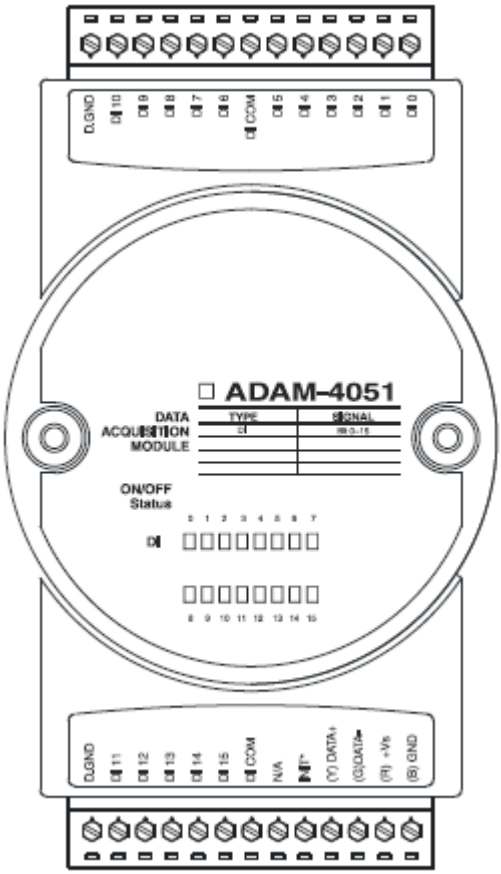

Figure 3.45 ADAM-4051 16-channel Isolated Digital Input Module

- Channel: 16
- Optical Isolation: 2500 VDC
- Opto-isolator response time: 25 μs
- Over-voltage Protect: 70 VDC
- ESD (Electro Static Discharge): 2000 VDC
- LED Indicator: On: Active; Off: Non-active
- Input Voltage:
  - Dry Contact Logic level 1: close to GND, Logic level 0: open
  - Wet Contact Logic level 1: 10 ~ 50 V, Logic level 0: 3 V
- Power consumption: 1W @ 24 VDC
- I/O Connector Type: 13 pin plug-in terminal*2

3.13.1 Application Wiring

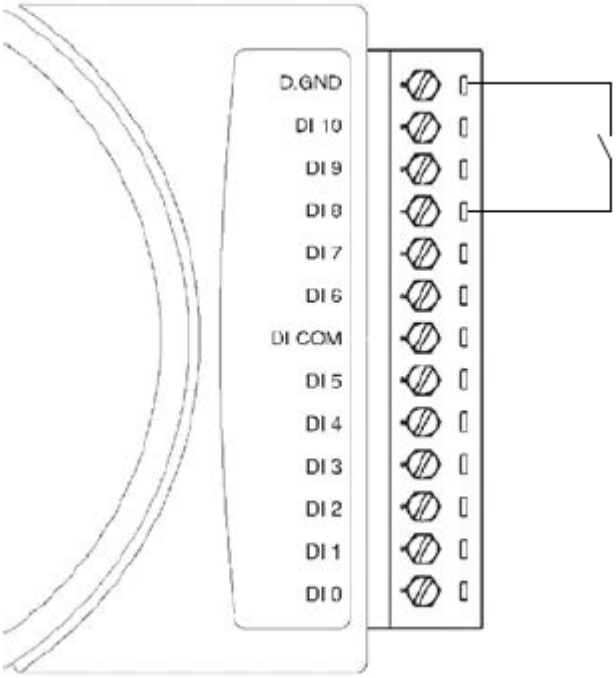

Figure 3.46 ADAM-4051 Dry Contact Wiring Diagram

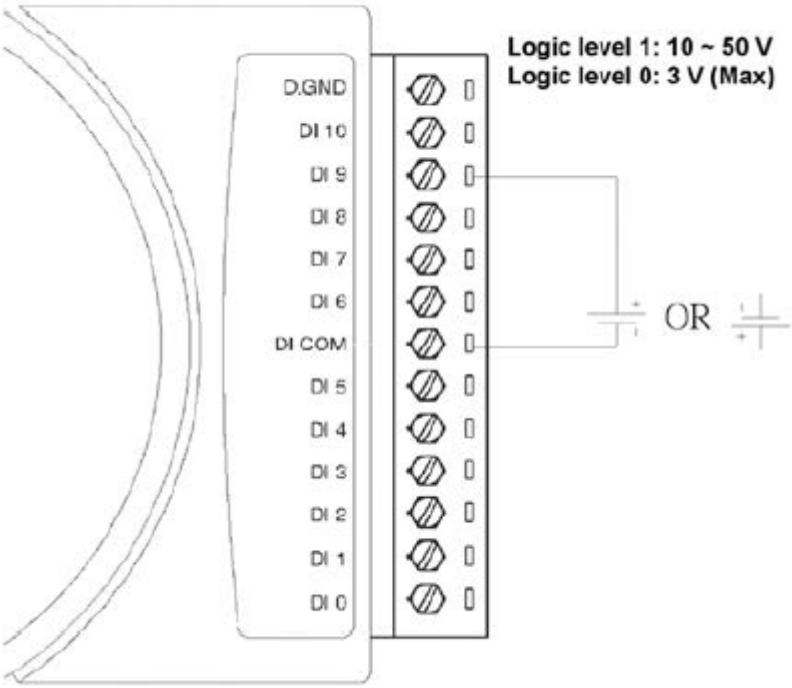

Figure 3.47 ADAM-4051 Wet Contact Wiring Diagram

3.14 ADAM-4052 Isolated Digital Input Module

The ADAM-4052 provides eight digital input channels. Among these eight channels, six of them are fully independent isolated channels and the other two are isolated channels with a common ground. They all have 5000 V_{RMS} isolation to prevent power surges from the input lines

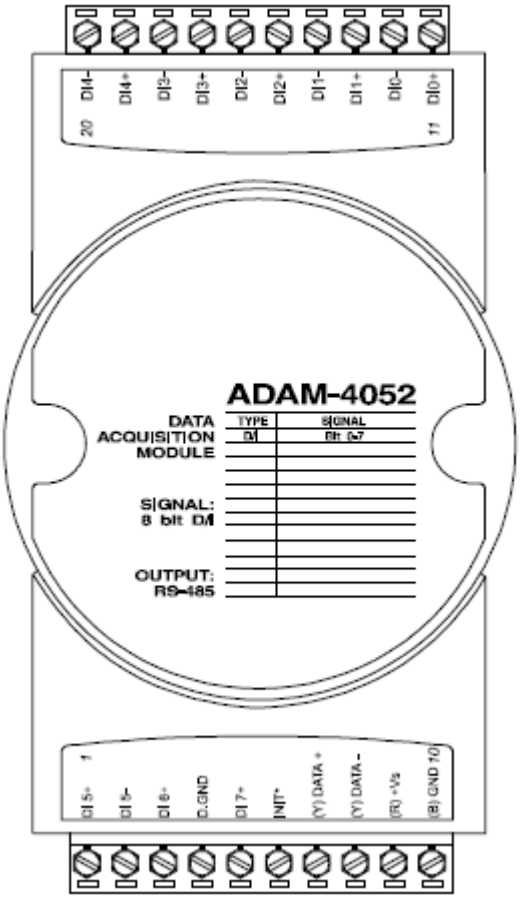

Figure 3.48 ADAM-4052 Isolated Digital Input Module

Channels: 8

- 6 differential channels (fully independent isolated channels)
- 2 single-ended channels (isolated channels with common ground)

Digital Input:

- Logic level 0: +1 V max.
- Logic level 1: +3 ~ 30 V

3.14.1 Application Wiring

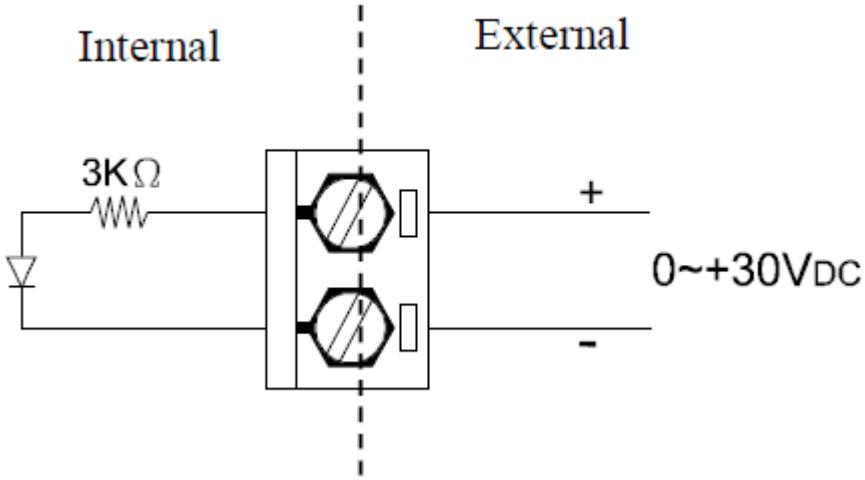

Figure 3.49 ADAM-4052 Isolation Digital Input Wiring Ground

3.15 ADAM-4053 16-channel Digital Input Module

The ADAM-4053 provides 16 digital input channels for dry contact or wet contact signals. For dry contact, the effective distance from DI to contact point is up to 500 m.

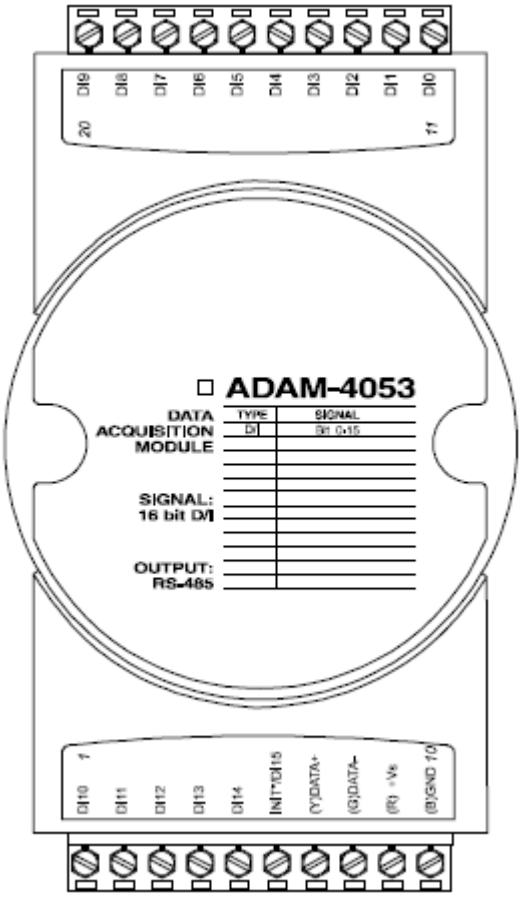

Figure 3.50 ADAM-4053 16-channel Digital Input Module

Channels: 16 Digital Input

-Dry contact

Logic level 0: Close to GND

Logic level 1: OPEN

-Wet contact

Logic level 0: +2 V max.

Logic level 1: +4 V to +30 V

Note! *There is one pin showing "INIT*/DI15" on the connector of the ADAM-4053 module. You can configure the pin define by the jumper on PCB (refer to the image below to see its location):*

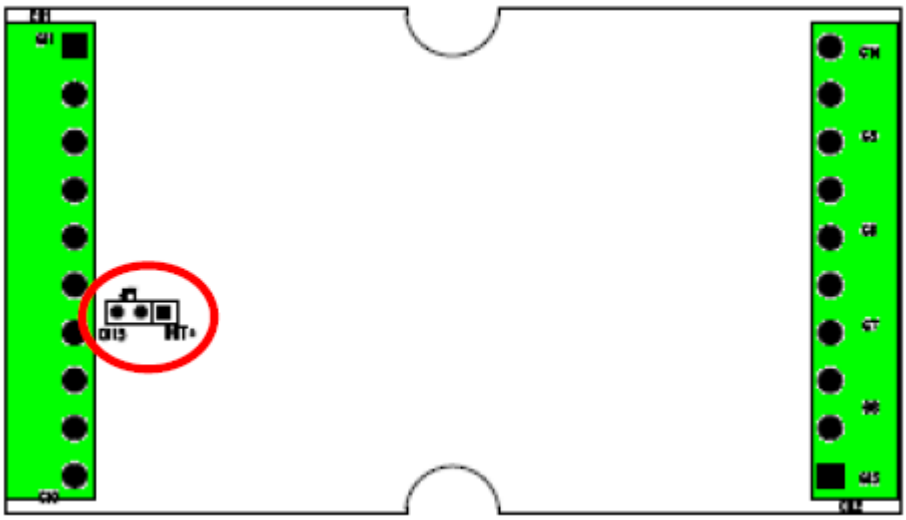

Jumper Setting:

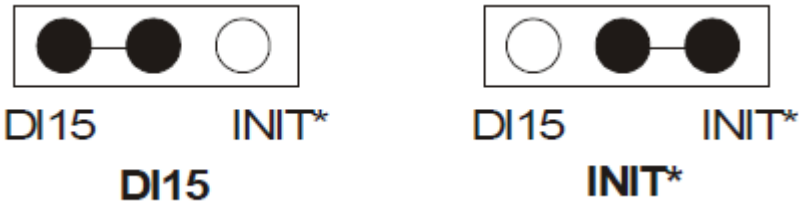

DI15 **INIT***

3.15.1 Application Wiring

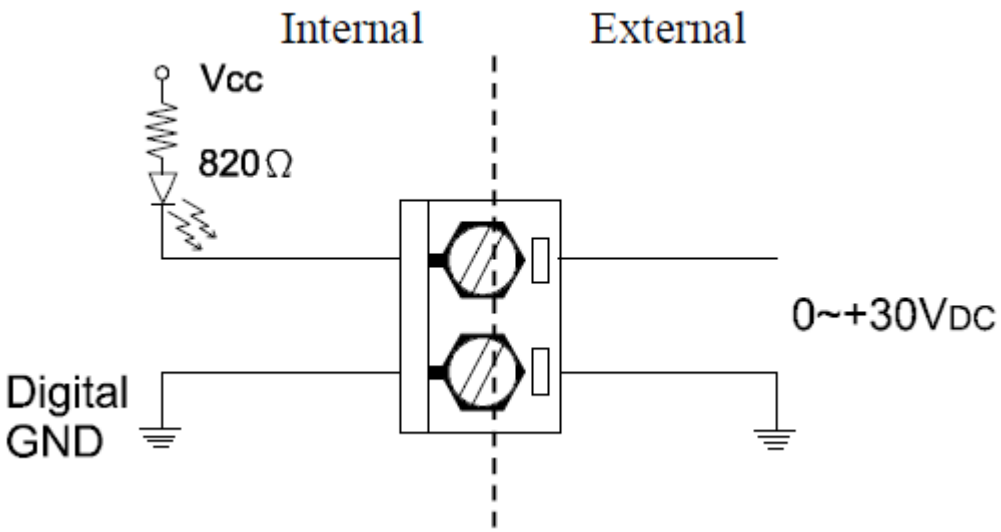

Figure 3.51 ADAM-4053 Wet Contact Input Wiring Diagram

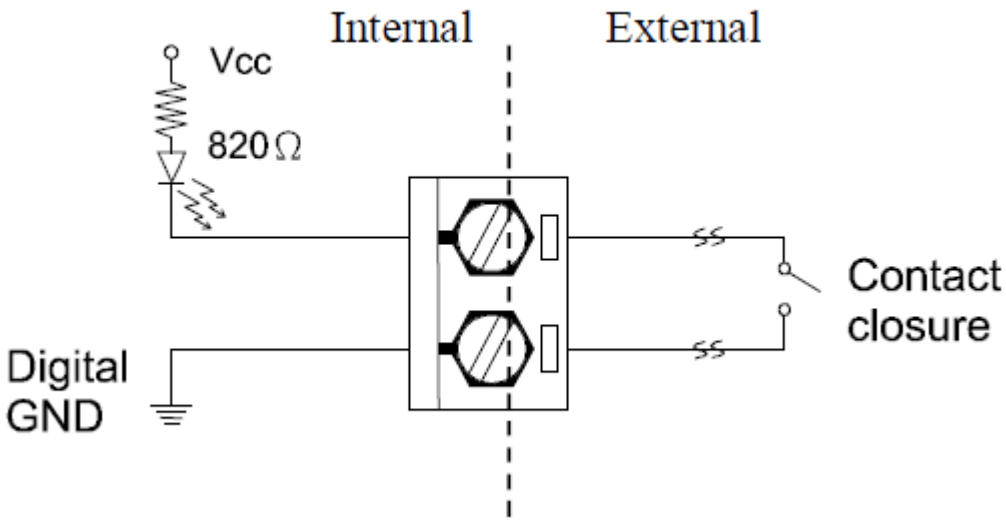

Figure 3.52 ADAM-4053 Contact Closure Input Wiring Diagram

3.16 ADAM-4055 16-channel Isolated Digital I/O Module

The ADAM-4055 offers 8 channel isolated digital input and 8 channel isolated digital output for critical applications. The inputs accept 10~50 V voltage, and the outputs can supply 5~40 VDC at the open collector. The ADAM-4055 is user friendly with built LED indicator for status reading.

Notice: We had updated the digital input dry/wet contact option by using jumper selection. The default setting is to support these two DI contacts both at the same time. However, a customer can also choose his or her needs by supporting only one. Please refer to the following wiring illustration figure 3-53 for more details.

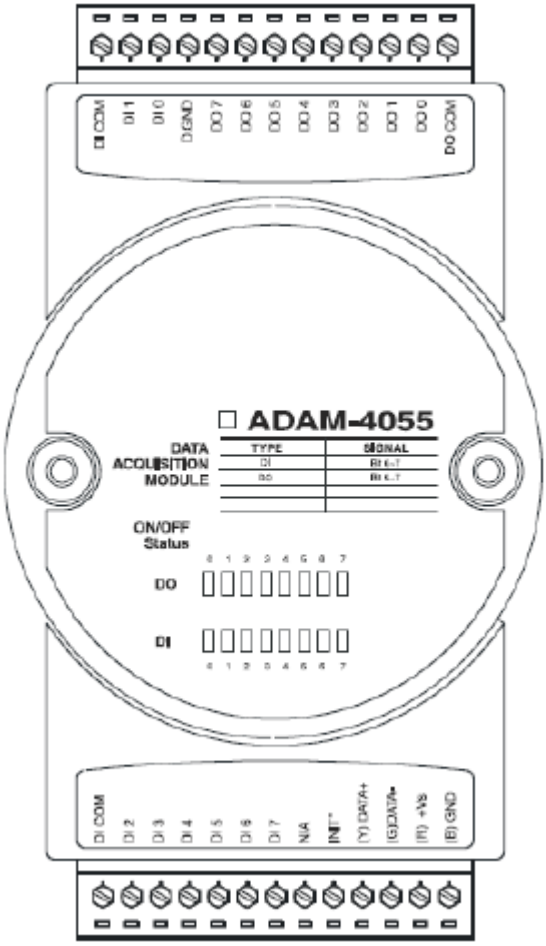

Figure 3.53 ADAM-4055 16-channel Digital I/O Module

3.16.1 Application Wiring:

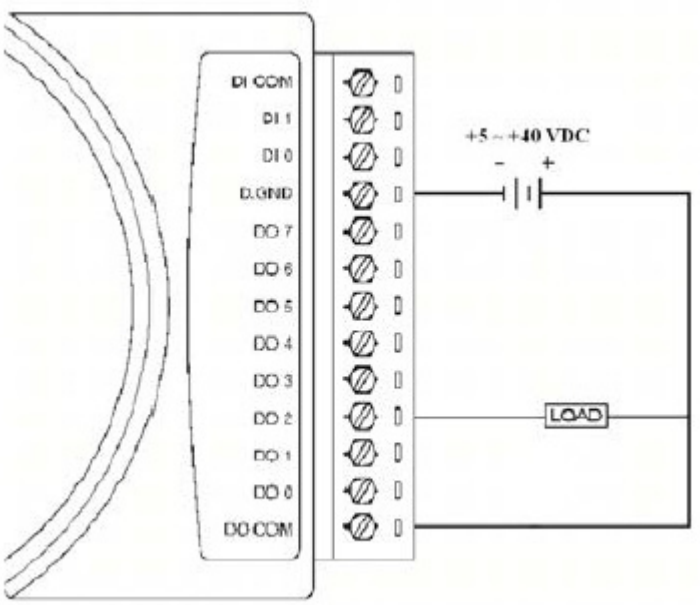

Figure 3.54 ADAM-4055 Digital Output Wiring Diagram

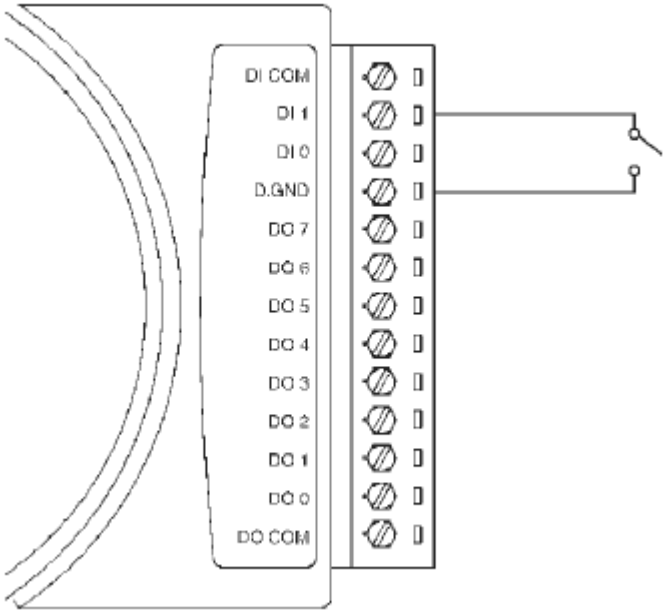

Figure 3.55 ADAM-4055 Digital Input Dry Contact Wiring Diagram

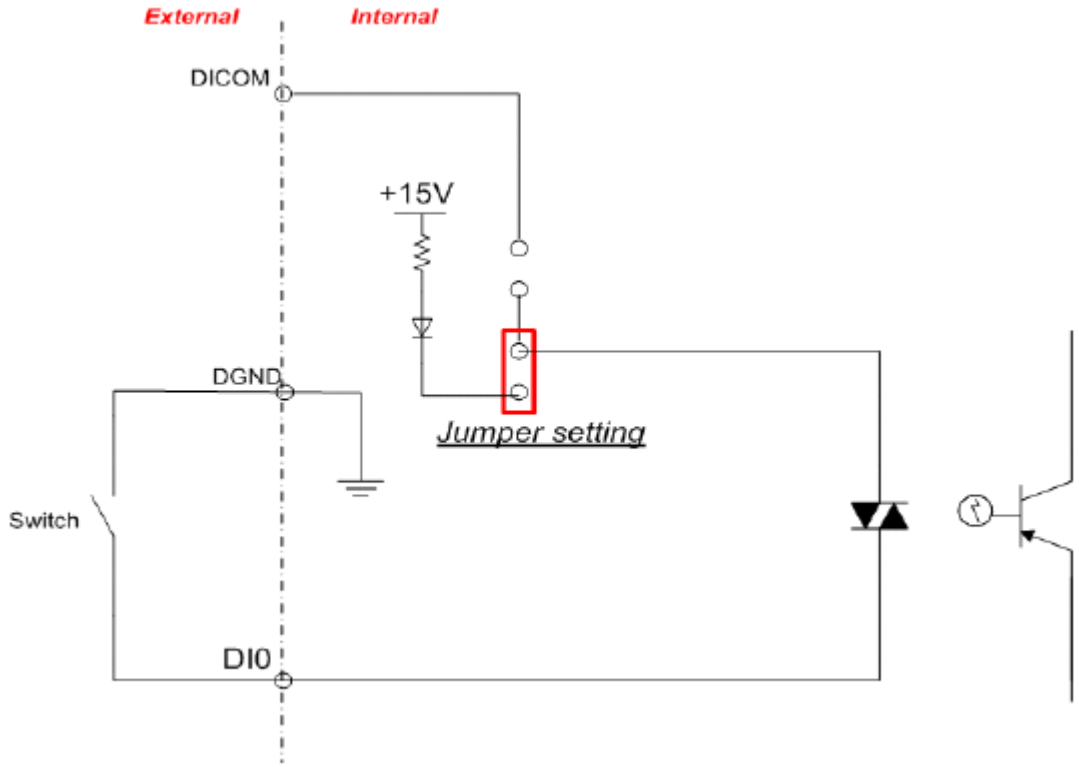

Figure 3.56 ADAM-4055 Digital Input Dry Contact Diagram (Internal)

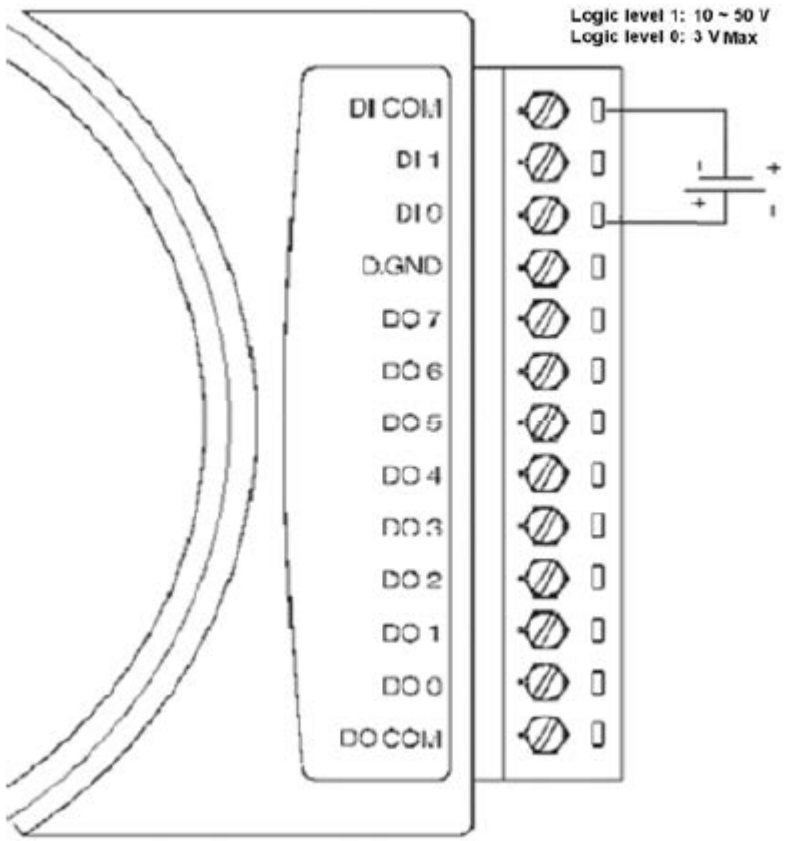

Figure 3.57 ADAM-4055 Digital Input Wet Contact Wiring Diagram

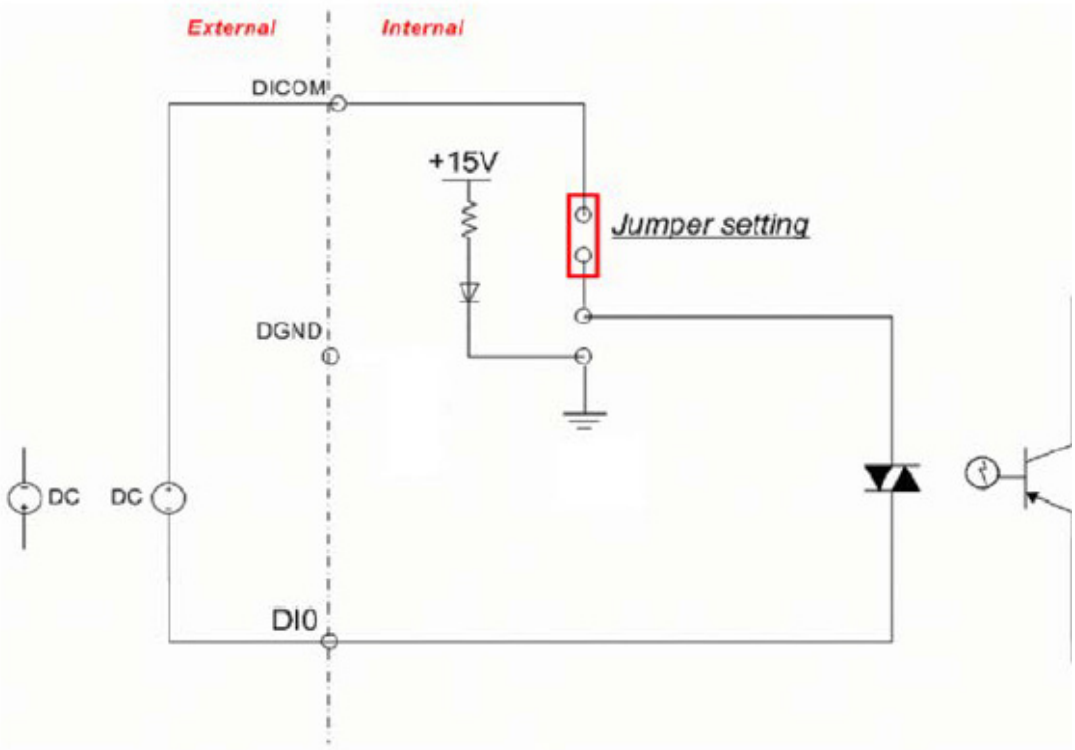

Figure 3.58 ADAM-4055 Digital Input Wet Contact Diagram (Internal)

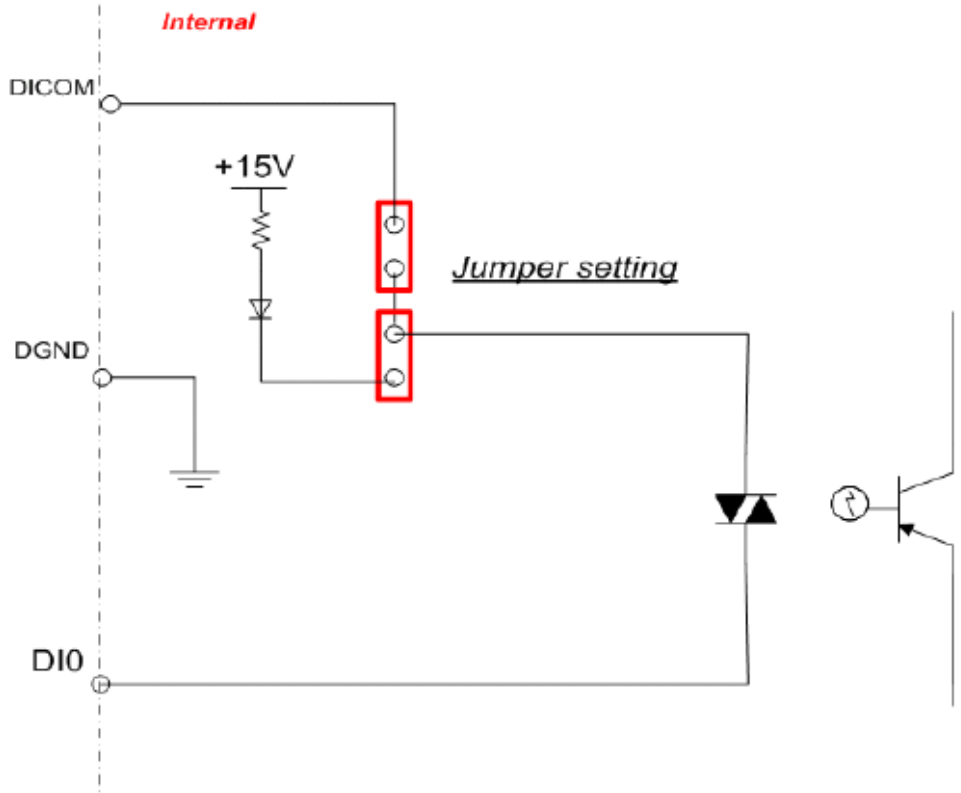

Figure 3.59 ADAM-4055 Default Jumper Setting for the Digital Input Wiring
(Support dry and wet contact digital input at the same time)

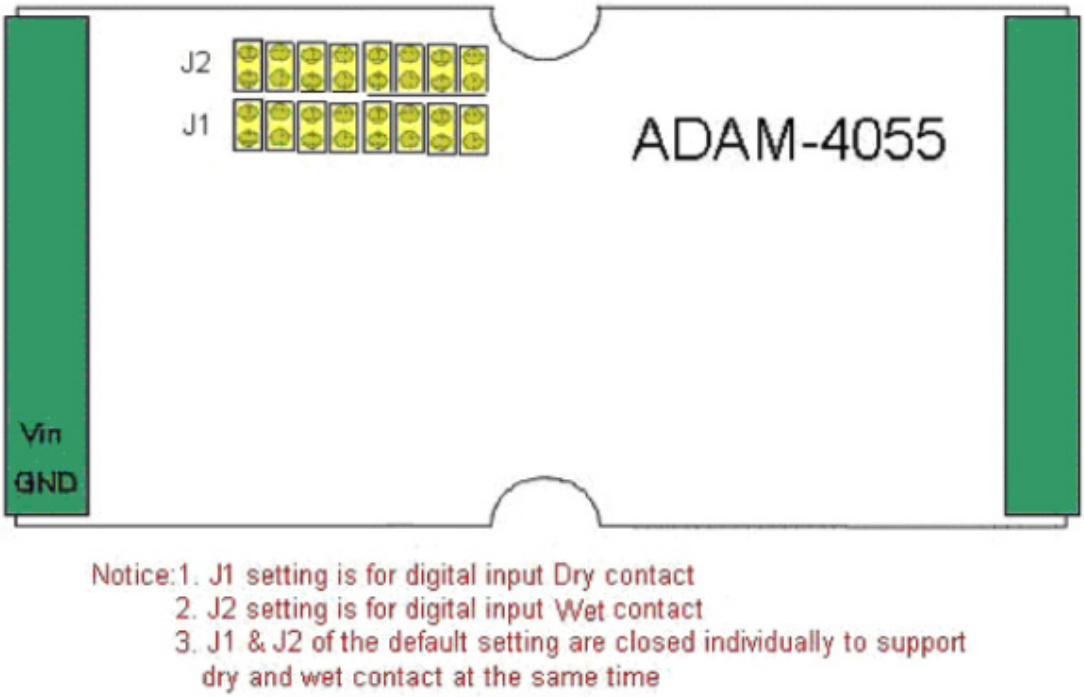

Figure 3.60 ADAM-4055 Default Jumper Setting for the Digital Input Wiring

3.17 ADAM-4056S 12-channel Sink Type Isolated Digital Output Module

ADAM-4056S is a 12-channel sink type isolated digital output module. The isolated channels are designed for digital output for critical applications. Open collector outputs can provide from +5 to +40 VDC, and both ADAM ASCII and Modbus/RTU protocols are supported. LED indicators are used for status reading.

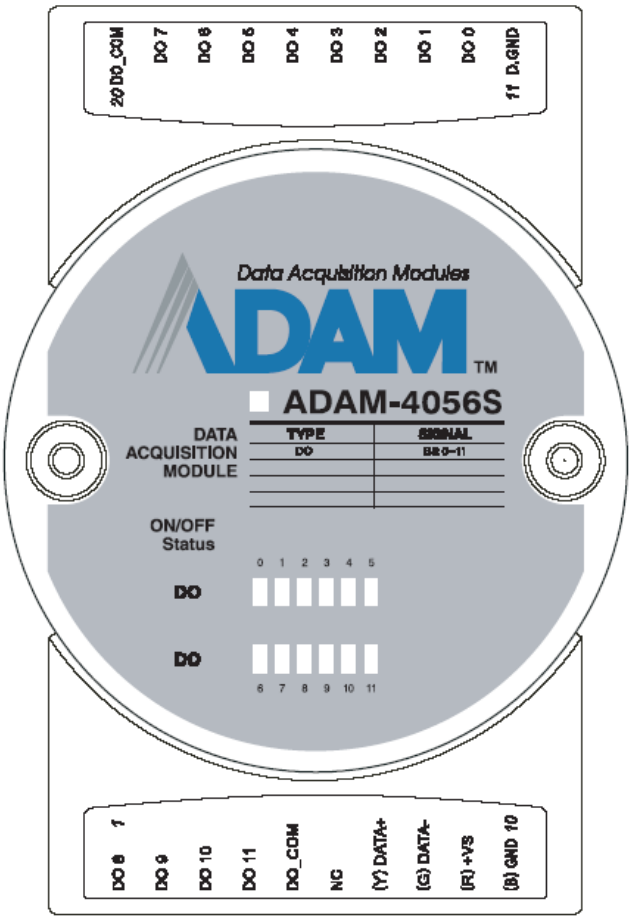

Figure 3.61 ADAM-4056S 12-channel Sink Type Isolated Digital Output Module

3.17.1 Technical Specification of ADAM-4056S

- Number of Output Channel: 12
- Digital Output:
  Open Collector from +5 ~ +40V, 200mA max. load (Sink)
- LED Indicator: On: Active, Off: Non-active
- Power Consumption: 1 W @ 24V_{DC}
- Optical isolation: 5000 V_{DC}
- Supports Modbus/RTU protocol
- I/O Connector Type: 10 pin plug-in terminal*2
- Support Safety Value:
  Force the DO channels to safety status when communication is in time-out and over pre-defined period.

3.17.2 Application Wiring

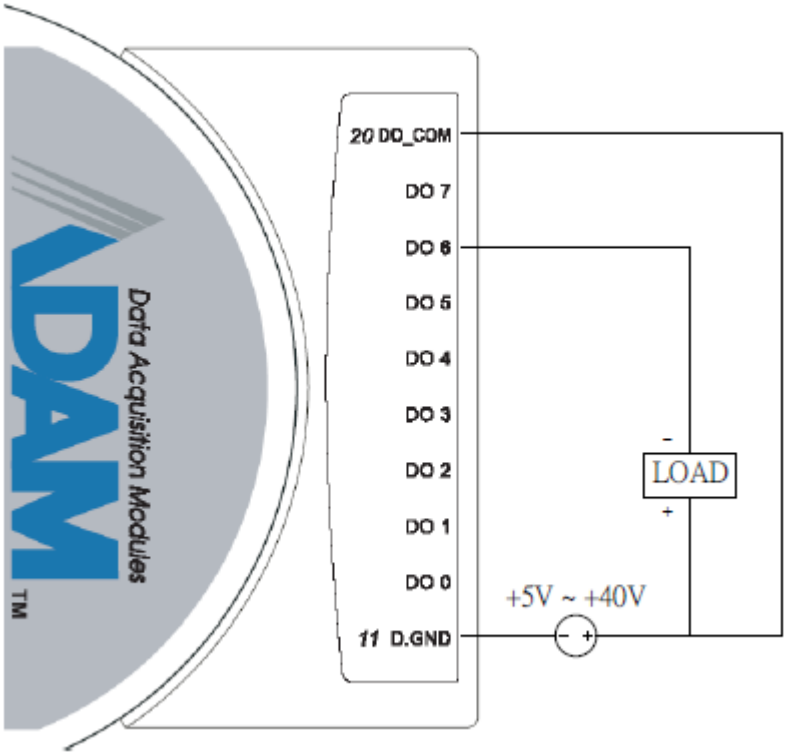

Figure 3.62 ADAM-4056S Digital Output Wiring Diagram

3.18 ADAM-4056SO 12-channel Source Type Isolated Digital Output Module

ADAM-4056SO is a 12-channel source type isolated digital output module. The 12 isolated digital output channels are designed for critical applications. The digital output signals are sent in the range of 10 ~ 35 VDC with maximum 1A per channel, and both ADAM ASCII and Modbus/RTU protocols are supported. The LED indicators provide status reading of the module.

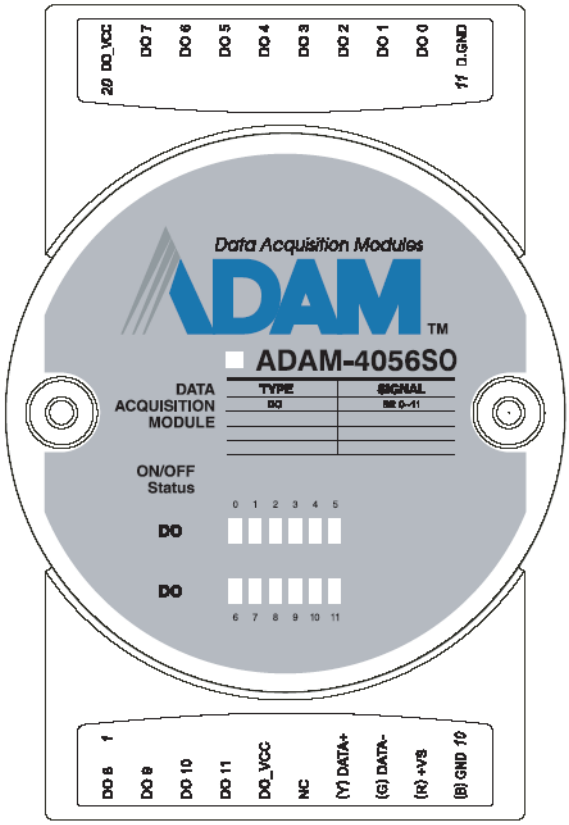

Figure 3.63 ADAM-4056SO 12-channel Source Type Isolated Digital Output Module

3.18.1 Technical Specification of ADAM-4056SO

- Number of Output Channel: 12
- Digital Output: VCC: +10 ~ 35VDC, 1A per Channel (Source)
- LED Indicator: On: Active, Off: Non-active
- Power Consumption: 1 W @ 24VDC
- Optical isolation: 5000 VDC
- Supports Modbus/RTU protocol
- ?/O Connector Type: 10 pin plug-in terminal*2
- Leakage current : 50μA
- Support Safety Value:
  Force the DO channels to safety status when communication is in time-out and over pre-defined period.

3.18.2 Application Wiring

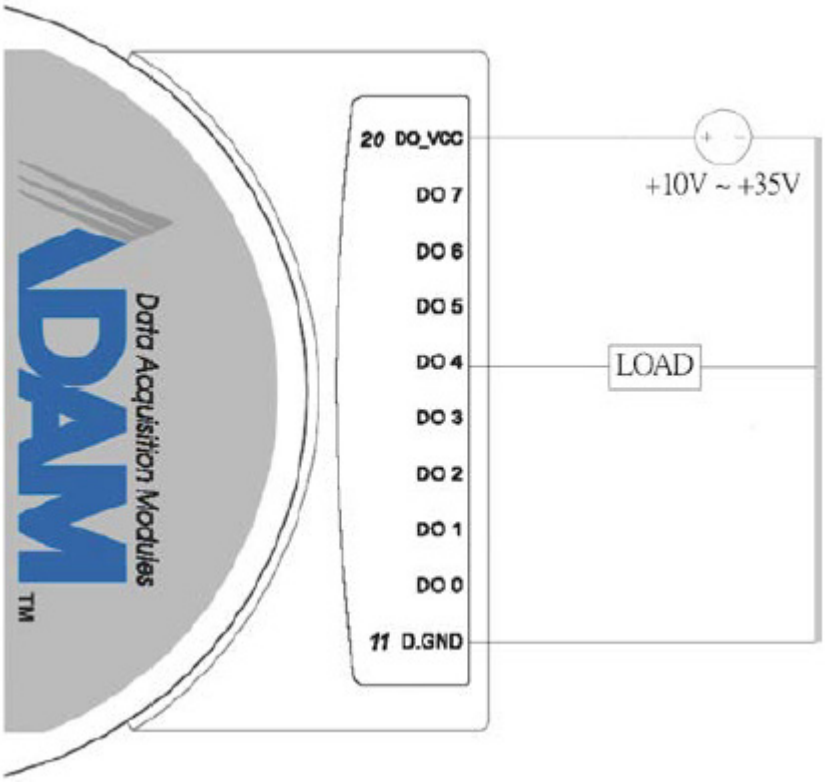

Figure 3.64 ADAM-4056SO Digital Output Wiring Diagram

3.19 ADAM-4060/4068 Relay Output Module

The ADAM Relay Output Module is a low-cost alternative to SSR modules. The ADAM-4060 Relay Output Module provides four relay channels; two of them are Form A, and two are Form C. The ADAM- 4068 Relay Output Module provides eight channels. Four of the channels are Form A, and four are Form C. These two modules are excellent for ON/OFF control or low-power switching applications and they are able to support the safety value setting.

3.19.1 ADAM-4060 4-channel Relay Output Module

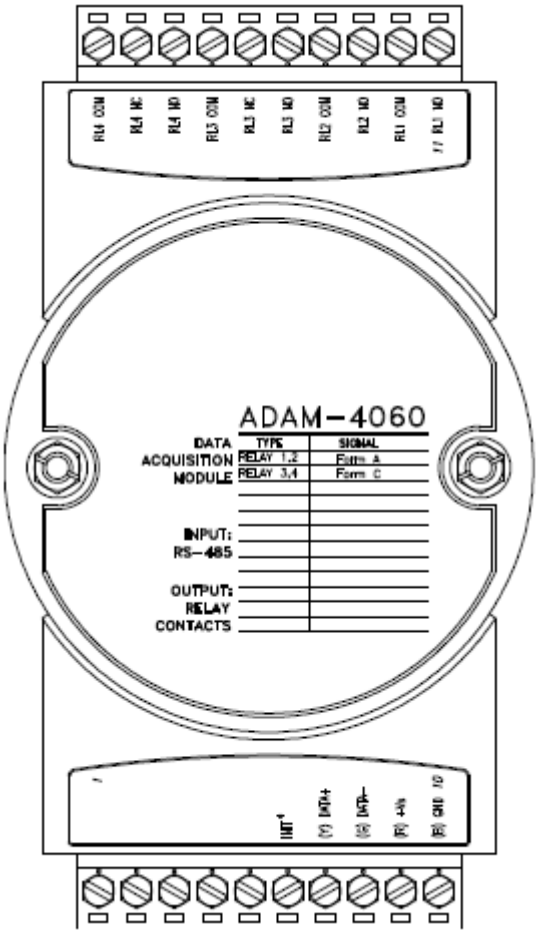

Figure 3.65 ADAM-4060 4-channel Relay Output Module

Contact rating for Form A and Form C: (Resistive)

AC	0.6 A @ 125 V
	0.3 A @ 250 V
DC	2 A @ 30 V
	0.6 A @ 110 V

3.19.2 ADAM-4068 8-channel Relay Output Module

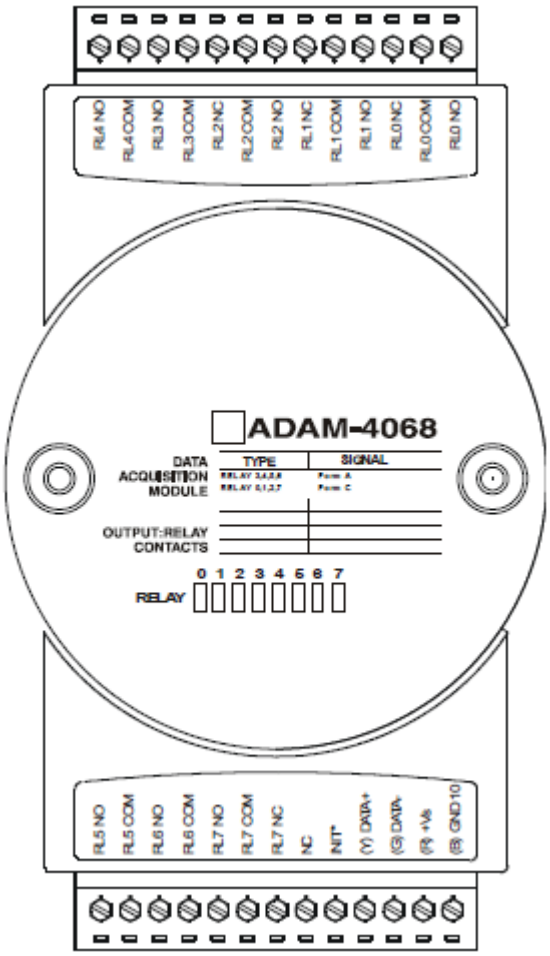

Figure 3.66 ADAM-4068 8-channel Relay Output Module

Contact Rating for Form A and Form C: (Resistive)

AC	0.5 A	@120 V
	0.25 A	@240 V
DC	1 A	@ 30 V
	0.3 A	@ 110 V

Note! *This electric current is under the load of resistance. If you try to use the load of inductance, the electric current would be less the above-mentioned value.*

3.19.3 Application Wiring

The following diagrams are examples of how to connect Form A and Form C relay output applications to your ADAM modules.

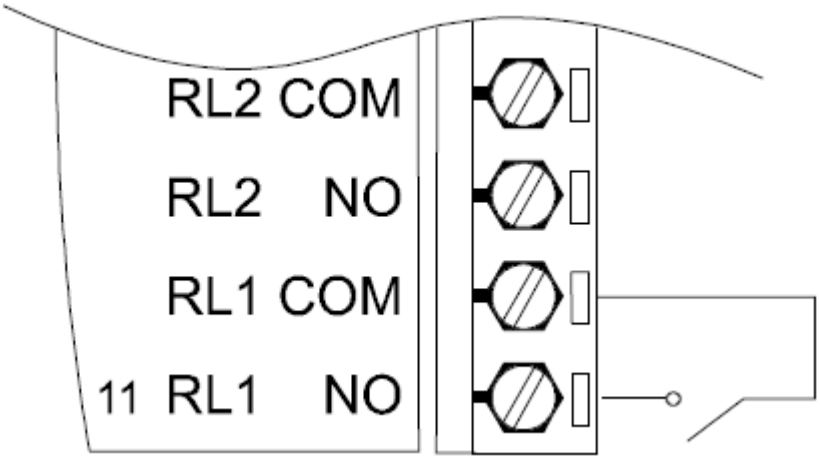

Figure 3.67 ADAM-4060 Form A Relay Output Wiring Diagram

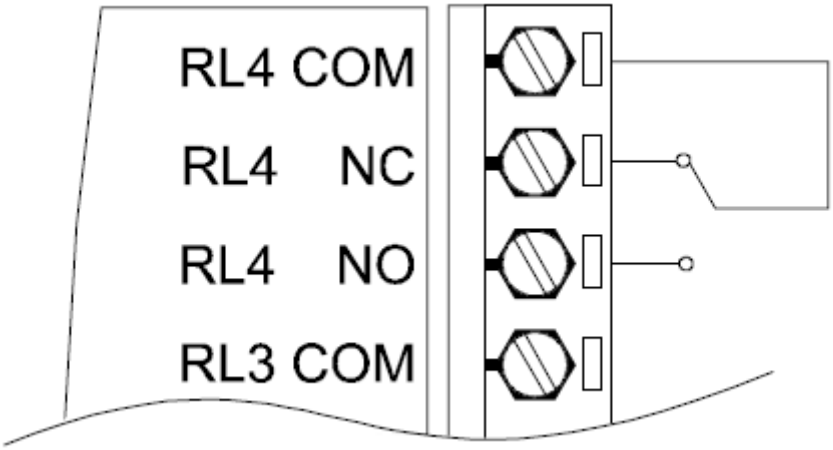

Figure 3.68 ADAM-4060 Form C Relay Output Wiring Diagram

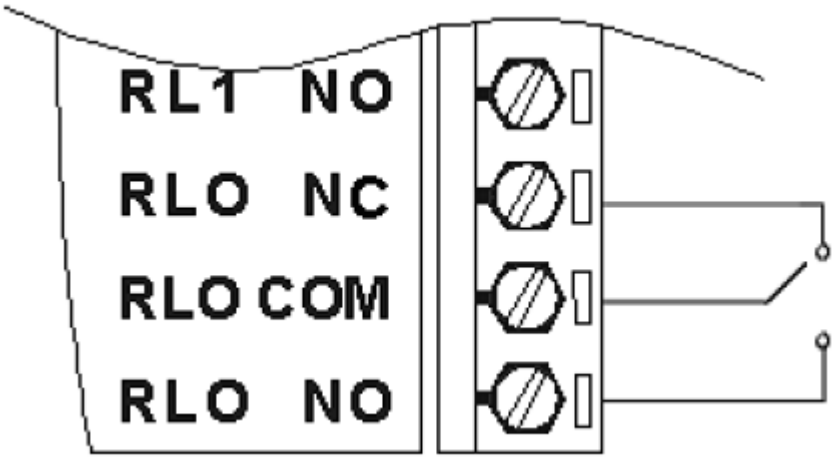

Figure 3.69 ADAM-4068 Form C Relay Output Wiring Diagram

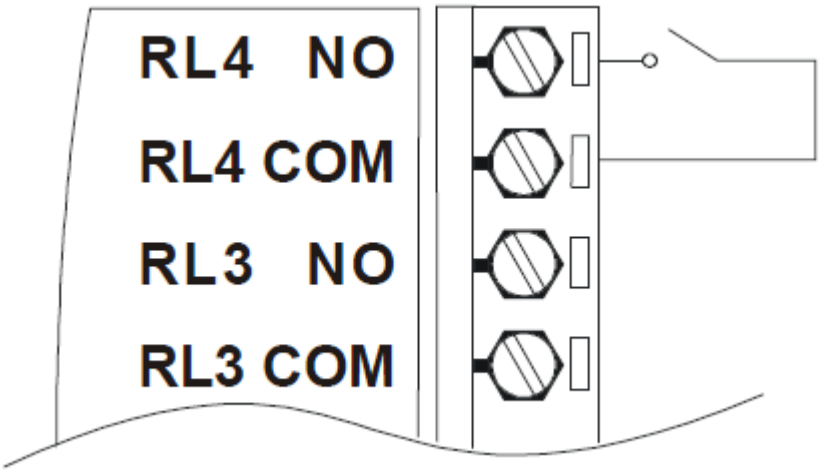

Figure 3.70 ADAM-4068 Form A relay output Wiring Diagram

3.20 ADAM-4069 8-channel Relay Output Module

The ADAM-4069 Relay Output Module provides eight channels; four are Form A and the rest are Form C. This module is excellent for ON/OFF control or low-power switching applications.

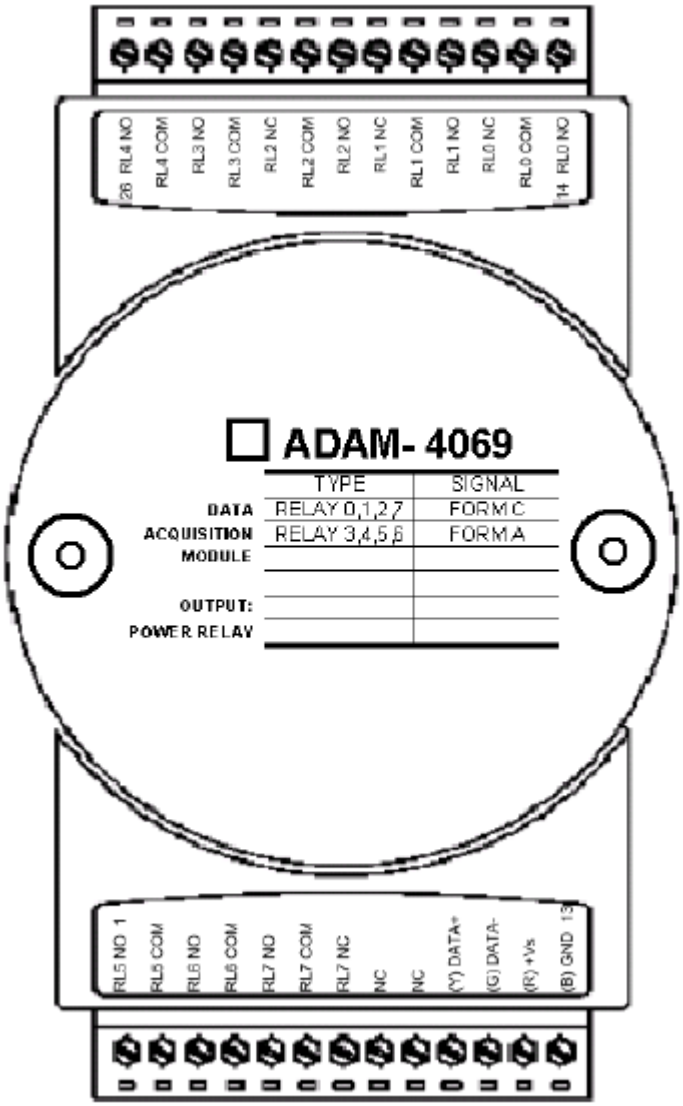

Figure 3.71 ADAM-4069 Relay Output Module

3.20.1 Specification

- Number of Relay Output Channel: 8
- Digital Output: (Source)
  - 4 Form A, 4 Form C
  - AC 5A@250V
  - DC 5A@30V
  - ON/OFF : 5ms/ 5.6ms
- Power Consumption: 2.2 W
- Supports Modbus/RTU protocol
- I/O Connector Type: 13-pin plug-terminal * 2
- Support Safety Value: Force the DO channels to safety status when communication is in time-out and over pre-defined period.

3.20.2 Wiring

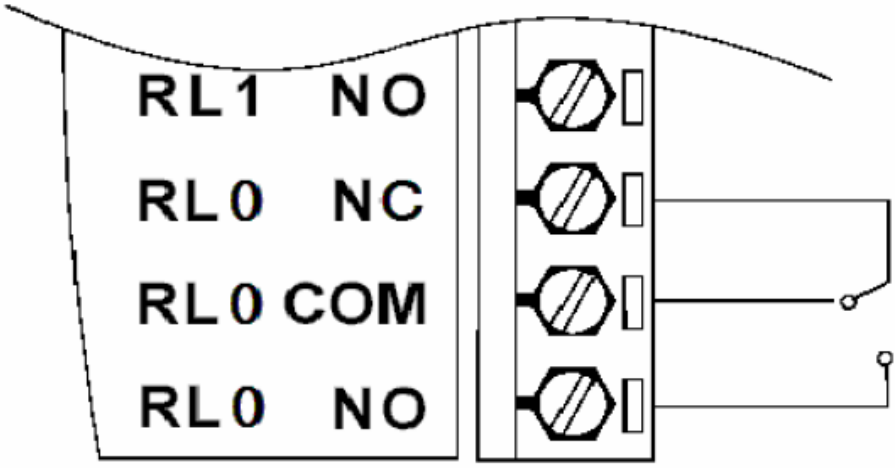

Figure 3.72 ADAM-4069 Form C Relay Output

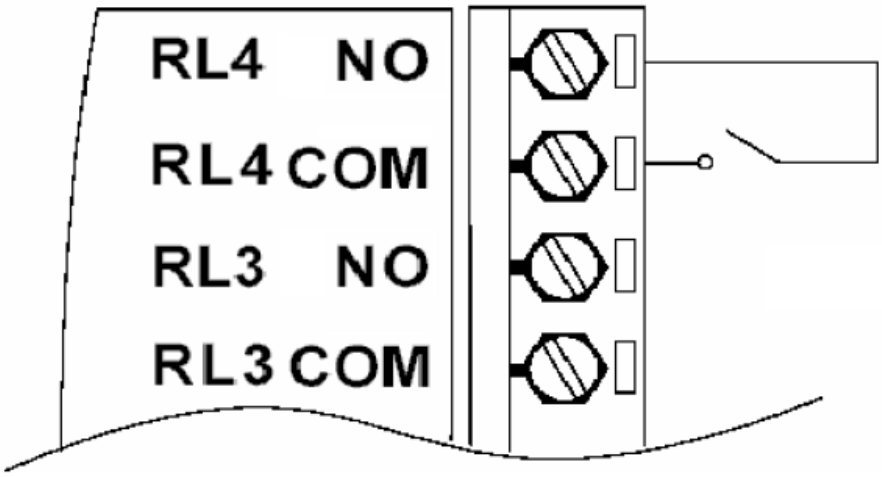

Figure 3.73 ADAM-4069 Form A Relay Output

3.21 ADAM-4080/4080D Counter/Frequency Input Modules

ADAM-4080/4080D Counter/frequency input module has two 32- bit counter input channels (counter 0 and counter 1) with built-in programmable timer for frequency measurement. These cost-effective modules let you monitor counter/frequency data as measurements are taken.

Front Panel LED Indicator (ADAM-4080D only)

The 5-digit LED display of the ADAM-4080D lets you monitor its counter data right at the source. The module's LED display shows counter values as well as high-low alarm messages when the counter exceeds its programmed limits (direct display).

Another option is to display the data sent by the host computer. The module first sends counter data to the host computer for conversion or calculation. The host computer then sends the data back to the ADAM- 4080D and displays on the module's LED display (remote display).

Signal Input Mode

The ADAM-4080/4080D provides separate terminals for photo isolated input and non-isolated input to simplify the wiring. Optoisolated input provides 2500 V_{RMS} isolation to protect your equipment from power surges at the ground terminal. After you make the physical connections, program the module to identify which of its two input terminals should be activated (isolated or non-isolated terminals).

Programmable Digital Filter

The ADAM-4080/4080D module includes a unique programmable digital filter to reject noise from the input lines. You can specify separate time constant like minimum signal width at high level and minimum signal width at low level. This provides stable output readings.

Programmable Threshold

When the ADAM-4080/4080D is programmed for non-isolated input, you can set a high and low trigger level. Like the programmable digital filter, the programmable threshold rejects noise from the input lines and provides a stable input readings

External Control (Gate mode)

Aside from the GND and counter terminal, each channel has a gate terminal to connect to an external gate signal. The gate signal (high or low) can trigger the counter from start or stop counting. The gate mode can be among these three options, low, high or disabled (low means that counting starts when the gate signal is low. It stops once the gate signal becomes high)

Programmable Alarm Output

The ADAM-4080 module provides a configurable alarm for each counter. The ADAM-4080D provides high and low alarm functions for counter 0. When the counter reaches an alarm limit, it will trigger the built-in digital output of machine ON/OFF control. The alarm limits may be downloaded into the module's EEPROM by the host computer. The initial count value of ADAM-4080 module's counter can be configured in any values.

The alarm functions can be enabled or disabled remotely. When the alarm functions are enabled, digital output channels are used to indicate the alarm states. For ADAM-4080, digital output channel 0 equals to the alarm state of counter 0, and digital output channel 1 equals to the alarm state of counter 1. For ADAM-4080D, digital output channel 0 equals to the low alarm state of counter 0, and digital output channel 1 equals to the high alarm state of counter 0.

Every A/D conversion will be followed by a comparison of alarm limits. If the input value exceeds one of these limits, the corresponding alarm state is set to ON.

There are two alarm mode options, momentary and latching, for ADAM-4080D. If the alarm is in latching mode, the alarm will stay on even when the input value returns within the limits. An alarm in latching mode can be turned off by issuing a Clear Alarm command from the host computer. A latching alarm is cleared by the module when the opposite alarm is set. For example, the alarm is in latching mode and the high alarm is then turned ON. When the module receives a value that is lower than the low alarm limit, it will clear the high alarm and turn the low alarm ON.

When the alarm is in Momentary mode, the alarm will be turned OFF as soon as the input value returns within the limits. The arrangement of coupling high and low alarm states with digital output lines may be utilized to build ON/OFF controllers that can operate without the host computer involvement.

3.21.1 ADAM-4080 Counter/Frequency Input Modules

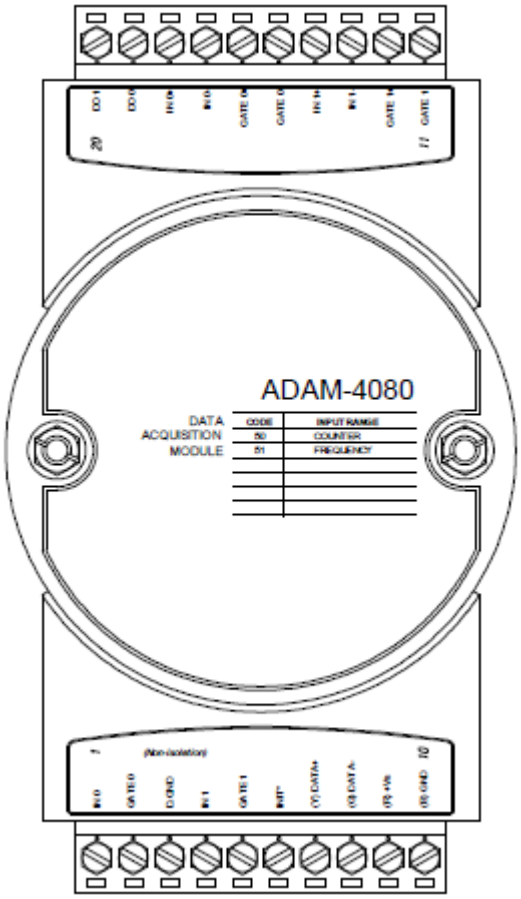

Figure 3.74 ADAM-4080 Counter/Frequency Input Module

Channels: 2 independent 32-bit counters (counter 0 and counter 1)
Input frequency: 50 kHz max.
Input mode: Isolated or non-isolated
Isolation input level:
- Logic level 0: +1 V max
- Logic level 1: +3.5 V to +30 V
- Input Impedance: 1.2 kΩ
Non-isolation input level (programmable threshold):
- Logic level 0: 0 to +5V (default = 0.8 V)
- Logic level 1: 0 to +5V (default = 2.4 V)
- Input Impedance: 50 MΩ

3.21.2 ADAM-4080D Counter/Frequency Input Modules with LED Display

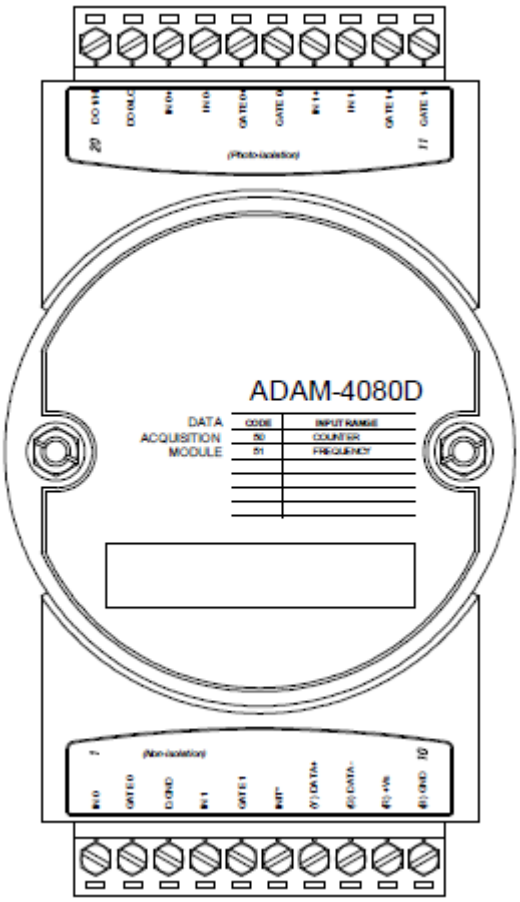

Figure 3.75 ADAM-4080D Counter/Frequency Input Module with LED Display

Channels: 2 independent 32-bit counters (counter 0 and counter 1)
Input frequency: 50 kHz max.
Input mode: Isolated or non-isolated
Isolation input level:
- Logic level 0: +1 V max
- Logic level 1: +3.5 V to +30 V
- Input Impedance: 1.2 kΩ

Non-isolation input level (programmable threshold):

- Logic level 0: 0 to +5V (default = 0.8 V)
- Logic level 1: 0 to +5V (default = 2.4 V)
- Input Impedance: 50 MΩ

3.21.3 Application Wiring

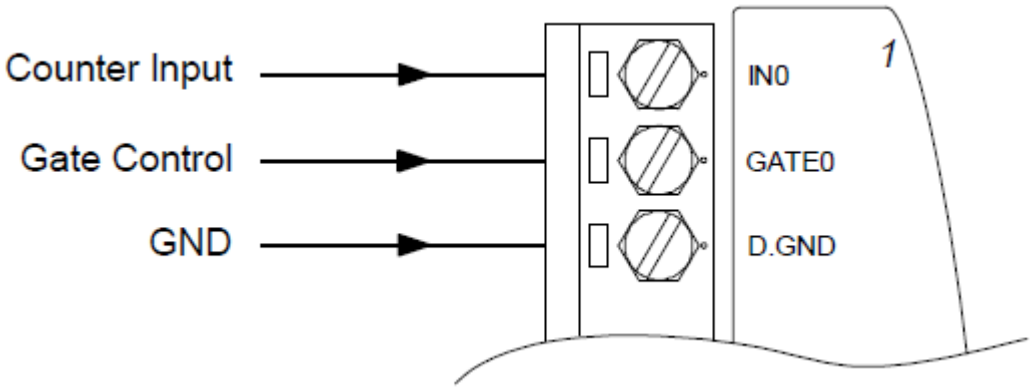

Figure 3.76 ADAM-4080/4080D Non-isolated Input

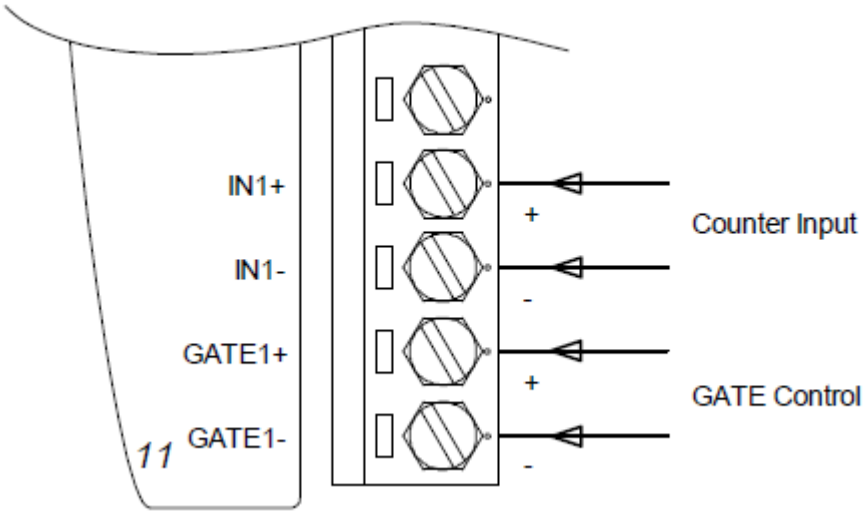

Figure 3.77 ADAM-4080/4080D Photo-isolated Input

Chapter 4

Command Set

4.1 Introduction

In order to avoid communication conflicts among devices trying to send data simultaneously, all the traffics are coordinated by the host computer. This action is initiated by the host computer using a command/response protocol.

When the modules are not transmitting, they are in listening mode. The host issues a command to a module with a specified address and waits for the module's response. If there is no response, a timeout aborts the sequence and returns the control to the host.

Changing ADAM's configuration might require the module to perform auto calibration before changes may take effect. This is the case when the range is modified especially. The module has to perform all stages of auto calibration which is also performed during the start up. When the calibration process is underway, the module does not respond to any other commands. The command set in the following pages includes the exact delays that might occur as modules are reconfigured.

4.2 Syntax

[delimiter character][address][command][data][checksum] [carriage return]

Every command begins with a delimiter character. There are four valid characters: a dollar sign $, a pound sign #, a percentage sign % and an at sign @.

The delimiter character is followed by a two-character address (hexadecimal) that specifies the target module. The actual two-character command follows by the address. Depending on the command, an optional data segment may follows by a command string. Furthermore, an optional two-character checksum may be appended to the total string. Every command is terminated by a carriage return (cr).

ALL COMMANDS SHOULD BE ISSUED IN UPPERCASE CHARACTERS!

Before the command set is given, we provide an I/O module commands search table to help you find the commands that you wish to use. The command set is divided into the following three categories:

- Analog Input Module commands
- Analog Output Module commands
- Digital I/O, Relay Output and Counter/Frequency Module commands

Each Category starts with a command summary of a particular type of module. However, they are explained in more depth at Chapter 5, 6 & 7 with detailed datasheets of each individual commands.

Although commands in different subsections sometimes share the same format, the effect they have on a certain module can be completely different from others. For example, the configuration command %AANNTTCCFF affects analog input modules and analog output modules differently. The full command set for every module is listed below.

4.3 I/O Module Commands Search Table

Table 4.1: ADAM-4011 Command Table

Command Syntax	Command Name	Command Description	Page No.
%AANNTTCCFF	Configuration	Sets the address, input range, baud rate, data format, checksum status, and/or integration time for a specified analog input module	5-4
$AA2	Configuration Status	Returns the configuration parameters for the specified analog input module	5-10
$AAF	Read Firmware Version	Return the firmware version code from the specified analog input module	5-12
$AAM	Read Module Name	Return the module name from the specified analog input module	5-13
#AA	Analog Data In	Returns the input value from a specified analog input module in the currently configured data format	5-14
$AA0	Span Calibration	Calibrates an analog input module to correct for gain errors	5-19
$AA1	Offset Calibration	Calibrates an analog input module to correct for offset errors	5-20
#**	Synchronized Sampling	Orders all analog input modules to sample their input values and store them in special registers	5-21
$AA4	Read Synchronized Data	Returns the value that was stored in the specified module's register after the #** command	5-22
$AA3	CJC Status	Returns the value of the CJC sensor for a specified analog input module	5-25
$AA9SNNNN	CJC Offset Calibration	Calibrates the CJC sensor for offset errors	5-26
@AADI	Read Digital I/O and Alarm Status	The addressed module returns the state of its digital input channel, its two digital output channels and the status of its alarm	5-50
@AADO(data)	Set Digital Output	Set the values of the module's two digital outputs (ON or OFF)	5-52
@AAEAT	Enable Alarm	Enables the alarm in either Momentary or Latching mode	5-54
@AAHI(data)	Set High Alarm	Downloads the High alarm limit value	5-56
@AALO(data)	Set Low Alarm	Downloads the Low alarm limit value	5-57
@AADA	Disable Alarm	Disables all alarm functions	5-58
@AACA	Clear Latch Alarm	The latch alarm is reset	5-59
@AARH	Read High Alarm	The addressed analog input module is asked to return its high alarm value	5-60
@AARL	Read Low Alarm	The addressed analog input module is asked to return its low alarm value	5-61
@AARE	Read Event Counter	The addressed module is asked to return its event counter value	5-62
@AACE	Clear Event Counter	The event counter is set to 0	5-63

Table 4.2: ADAM-4011D Command Table			
Command Syntax	**Command Name**	**Command Description**	**Page No.**
%AANNTTCCFF	Configuration	Sets the address, input range, baud rate, data format, checksum status, and/or integration time for a specified analog input module	5-4
$AA2	Configuration Status	Returns the configuration parameters for the specified analog input module	5-10
$AAF	Read Firmware Version	Return the firmware version code from the specified analog input module	5-12
$AAM	Read Module Name	Return the module name from the specified analog input module	5-13
#AA	Analog Data In	Returns the input value from a specified analog input module in the currently configured data format	5-14
$AA0	Span Calibration	Calibrates an analog input module to correct for gain errors	5-19
$AA1	Offset Calibration	Calibrates an analog input module to correct for offset errors	5-20
#**	Synchronized Sampling	Orders all analog input modules to sample their input values and store them in special registers	5-21
$AA4	Read Synchronized Data	Returns the value that was stored in the specified module's register after the #** command	5-22
$AA3	CJC Status	Returns the value of the CJC sensor for a specified analog input module	5-25
$AA9SNNNN	CJC Offset Calibration	Calibrates the CJC sensor for offset errors	5-26
@AADI	Read Digital I/O and Alarm Status	The addressed module returns the state of its digital input channel, its two digital output channels and the status of its alarm	5-50
@AADO(data)	Set Digital Output	Set the values of the module's two digital outputs (ON or OFF)	5-52
@AAEAT	Enable Alarm	Enables the alarm in either Momentary or Latching mode	5-54
@AAHI(data)	Set High Alarm	Downloads the High alarm limit value	5-56
@AALO(data)	Set Low Alarm	Downloads the Low alarm limit value	5-57
@AADA	Disable Alarm	Disables all alarm functions	5-58
@AACA	Clear Latch Alarm	The latch alarm is reset	5-59
@AARH	Read High Alarm	The addressed analog input module is asked to return its high alarm value	5-60
@AARL	Read Low Alarm	The addressed analog input module is asked to return its low alarm value	5-61
@AARE	Read Event Counter	The addressed module is asked to return its event counter value	5-62
@AACE	Clear Event Counter	The event counter is set to 0	5-63

Table 4.3: ADAM-4012 Command Table			
Command Syntax	**Command Name**	**Command Description**	**Page No.**
%AANNTTCCFF	Configuration	Sets the address, input range, baud rate, data format, checksum status, and/or integration time for a specified analog input module	5-4
#AA	Analog Data In	Returns the input value from a specified analog input module in the currently configured data format	5-14
$AA0	Span Calibration	Calibrates an analog input module to correct for gain errors	5-19
$AA1	Offset Calibration	Calibrates an analog input module to correct for offset errors	5-20
#**	Synchronized Sampling	Orders all analog input modules to sample their input values and store them in special registers	5-21
$AA4	Read Synchronized Data	Returns the value that was stored in the specified module's register after the #** command	5-22
$AA2	Configuration Status	Returns the configuration parameters for the specified analog input module	5-10
$AAF	Read Firmware Version	Return the firmware version code from the specified analog input module	5-12
$AAM	Read Module Name	Return the module name from the specified analog input module	5-13
@AADI	Read Digital I/O and Alarm Status	The addressed module returns the state of its digital input channel, its two digital output channels and the status of its alarm	5-50
@AADO(data)	Set Digital Output	Set the values of the module's two digital outputs (ON or OFF)	5-52
@AAEAT	Enable Alarm	Enables the alarm in either Momentary or Latching mode	5-54
@AAHI(data)	Set High Alarm	Downloads the High alarm limit value	5-56
@AALO(data)	Set Low Alarm	Downloads the Low alarm limit value	5-57
@AADA	Disable Alarm	Disables all alarm functions	5-58
@AACA	Clear Latch Alarm	The latch alarm is reset	5-59
@AARH	Read High Alarm	The addressed analog input module is asked to return its high alarm value	5-60
@AARL	Read Low Alarm	The addressed analog input module is asked to return its low alarm value	5-61
@AARE	Read Event Counter	The addressed module is asked to return its event counter value	5-62
@AACE	Clear Event Counter	The event counter is set to 0	5-63

Table 4.4: ADAM-4013 Command Table			
Command Syntax	**Command Name**	**Command Description**	**Page No.**
%AANNTTCCFF	Configuration	Sets the address, input range, baud rate, data format, checksum status, and/or integration time for a specified analog input module	5-4
#AA	Analog Data In	Returns the input value from a specified analog input module in the currently configured data format	5-14
$AA0	Span Calibration	Calibrates an analog input module to correct for gain errors	5-19
$AA1	Offset Calibration	Calibrates an analog input module to correct for offset errors	5-20
#**	Synchronized Sampling	Orders all analog input modules to sample their input values and store them in special registers	5-21
$AA4	Read Synchronized Data	Returns the value that was stored in the specified module's register after the #** command	5-22
$AA2	Configuration Status	Returns the configuration parameters for the specified analog input module	5-10
$AAF	Read Firmware Version	Return the firmware version code from the specified analog input module	5-12
$AAM	Read Module Name	Return the module name from the specified analog input module	5-13

Table 4.5: ADAM-4015/ADAM-4015T Command Table			
Command Syntax	**Command Name**	**Command Description**	**Page No.**
%AANNTTCCFF	Configuration	Sets the address, input range, baud rate, data format, checksum status, and/or integration time for a specified analog input module	5-4
$AA2	Configuration Status	Returns the configuration parameters for the specified analog input module	5-10
$AAF	Read Firmware Version	Return the firmware version code from the specified analog input module	5-12
$AAM	Read Module Name	Return the module name from the specified analog input module	5-13
#AA	Analog Data In	Returns the input value from a specified analog input module in the currently configured data format	5-14
#AAN	Read Analog Input from Channel N	Returns the input value from a specified channel of analog input module in the currently configured data format	5-16
$AA5VV	Enable/Disable Channels for Multiplexing	Enable or disable the individual channels in an analog module	5-17

Table 4.5: ADAM-4015/ADAM-4015T Command Table			
$AA6	Read Channel Status	Get the enable/disable status of all channels in an analog module	5-18
$AA0	Span Calibration	Calibrates an analog input module to correct for gain errors	5-19
$AA1	Offset Calibration	Calibrates an analog input module to correct for offset errors	5-20
#**	Synchronized Sampling	Orders all analog input modules to sample their input values and store them in special registers	5-21
$AA4	Read Synchronized Data	Returns the value that was stored in the specified module's register after the #** command	5-22
$AAB	Channel Diagnose	Diagnose channel status in over range, under range, and wire opening	5-24
$AA0Ci	Single Channel Span Calibration	Calibrates a specified channel to correct for gain errors	5-27
$AA1Ci	Single Channel Offset Calibration	Calibrates a specified channel to correct for offset errors	5-28
$AA7CiRrr	Single Channel Range Configuration	Configure the input type and range of the specified channel in an analog input module	5-29
$AA8Ci	Read Single Channel Range Configuration	Get the input type and range of the specified channel in an analog input module	5-30
$AAXnnnn	Watchdog Timer Setting	Set communication WDT cycle time from 0000 ~ 9999 (unit: 0.1 second. if value is 0000, the communication WDT function will be disable)	5-31
$AAY	Read Watchdog Timer Setting	Read the cycle time setting of communication WDT	5-32
$AAS0	Internal Calibration	Internal self-calibration for offset and gain errors	5-33
$AAS0	Reload default calibrating parameter	Reload factory default calibrating parameter to overwrite current calibrating parameter	5-34

Table 4.6: ADAM-4016 Command Table			
Command Syntax	**Command Name**	**Command Description**	**Page No.**
%AANNTTCCFF	Configuration	Sets the address, input range, baud rate, data format, checksum status, and/or integration time for a specified analog input module	5-4
$AA2	Configuration Status	Returns the configuration parameters for the specified analog input module	5-10
$AAF	Read Firmware Version	Return the firmware version code from the specified analog input module	5-12
$AAM	Read Module Name	Return the module name from the specified analog input module	5-13

Table 4.6: ADAM-4016 Command Table			
#AA	Read Analog Input	Return the input value from the specified analog input module in the currently configured data format	5-14
$AA0	Span Calibration	Calibrates an analog input module to correct for gain errors	5-19
$AA1	Offset Calibration	Calibrates an analog input module to correct for offset errors	5-20
#**	Synchronized Sampling	Orders all analog input modules to sample their input values and store them in special registers	5-21
$AA4	Read Synchronized Data	Returns the value that was stored in the specified module's register after the #** command	5-22
$AA6	Get Excitation Voltage Output Value	Returns either last value sent to specified module by $AA7 command, or start-up output voltage	5-65
$AA7	Excitation Voltage Output	Direct output excitation voltage data to a specified module	5-66
$AAS	Start-up Voltage Output Configuration	Stores a default value in a specified module. The output value will take effect upon startup	5-67
$AAE	Trim Calibration	Trims specified module a number of units up or down	5-69
$AAA	Zero Calibration	Tells the module to store parameters for zero calibration	5-70
$AAB	Span Calibration	Tells the module to store parameters for span calibration	5-71
@AADI	Read Digital I/O and Alarm Status	The addressed module returns the state of its digital input channel, its two digital output channels and the status of its alarm	5-50
@AADO(data)	Set Digital Output	Set the values of the module's two digital outputs (ON or OFF)	5-52
@AAEAT	Enable Alarm	Enables the alarm in either Momentary or Latching mode	5-54
@AAHI(data)	Set High Alarm	Downloads the High alarm limit value	5-56
@AALO(data)	Set Low Alarm	Downloads the Low alarm limit value	5-57
@AADA	Disable Alarm	Disables all alarm functions	5-58
@AACA	Clear Latch Alarm	The latch alarm is reset	5-59
@AARH	Read High Alarm	The addressed analog input module is asked to return its high alarm value	5-60
@AARL	Read Low Alarm	The addressed analog input module is asked to return its low alarm value	5-61

Table 4.7: ADAM-4017 Command Table			
Command Syntax	**Command Name**	**Command Description**	**Page No.**
%AANNTTCCFF	Configuration	Sets the address, input range, baud rate, data format, checksum status, and/or integration time for a specified analog input module	5-4
$AA2	Configuration Status	Return the configuration parameters for the specified analog input module	5-10
$AAF	Read Firmware Version	Return the firmware version code from the specified analog input module	5-12
$AAM	Read Module Name	Return the module name from the specified analog input module	5-13
#AA	Read Analog Input	Return the input values from all channels of the specified analog input module	5-14
#AAN	Read Analog Input from Channel N	Return the input value from channels number N of the specified analog input module	5-16
$AA5VV	Enable/Disable Channels for Multiplexing	Enable or disable the individual channels in an analog module	5-17
$AA6	Read Channel Status	Get the enable/disable status of all channels in an analog module	5-18
$AA0	Span Calibration	Calibrates an analog input module to correct for gain errors	5-19
$AA1	Offset Calibration	Calibrates an analog input module to correct for offset errors	5-20

Table 4.8: ADAM-4017+ Command Table			
Command Syntax	**Command Name**	**Command Description**	**Page No.**
%AANNTTCCFF	Configuration	Sets the address, input range, baud rate, data format, checksum status, and/or integration time for a specified analog input module	5-4
$AA2	Configuration Status	Return the configuration parameters for the specified analog input module	5-10
$AAF	Read Firmware Version	Return the firmware version code from the specified analog input module	5-12
$AAM	Read Module Name	Return the module name from the specified analog input module	5-13
#AA	Read Analog Input from all Channels	Return the input values from all channels of the specified analog input module	5-14
#AAN	Read Analog Input from Channel N	Return the input value from channels number N of the specified analog input module	5-16
$AA5VV	Enable/Disable Channels for Multiplexing	Enable or disable the individual channels in an analog module	5-17

Table 4.8: ADAM-4017+ Command Table			
$AA6	Read Channel Status	Get the enable/disable status of all channels in an analog module	5-18
$AA0Ci	Single Channel Span Calibration	Calibrates a specified channel to correct for gain errors	5-27
$AA1Ci	Single Channel Offset Calibration	Calibrates a specified channel to correct for offset errors	5-28
$AA7CiRrr	Single Channel Range Configuration	Configure the input type and range of the specified channel in an analog input module	5-29
$AA8Ci	Read Single Channel Range Configuration	Get the input type and range of the specified channel in an analog input module	5-30
$AAXnnnn	Watchdog Timer Setting	Set communication WDT cycle time from 0000 ~ 9999 (unit: 0.1 second. if value is 0000, the communication WDT function will be disable)	5-31
$AAY	Read Watchdog Timer Setting	Read the cycle time setting of communication WDT	5-32

Table 4.9: ADAM-4017+ Input range and external calibrating input source for each input type				
Range bcode(Hex)	**Input Range**	**Max. Signal**	**Min Signal**	**Displayed Resolution**
07	4~20 mA	+20.000	+4.000 1	uA
08	+/-10 V	+10.000	-10.000	1mV
09	+/-5 V	+5.0000	-5.0000	100.00uV
0a	+/-1 V	+1.0000	-1.0000	100.00uV
0b	+/-500 mV	+500.00	-500.00	10uV
0c	+/-150 mV	+150.00	-150.00	10uV
0d	+/-20 mA	+20.000	-20.000	1uA

Table 4.10: ADAM-4018 Command Table			
Command Syntax	**Command Name**	**Command Description**	**Page No.**
%AANNTTCCFF	Configuration	Sets the address, input range, baud rate, data format, checksum status, and/or integration time for a specified analog input module	5-4
$AA2	Configuration Status	Return the configuration parameters for the specified analog input module	5-10
$AAF	Read Firmware Version	Return the firmware version code from the specified analog input module	5-12
$AAM	Read Module Name	Return the module name from the specified analog input module	5-13
#AA	Read Analog Input from all Channels	Return the input values from all channels of the specified analog input module	5-14
#AAN	Read Analog Input from Channel N	Return the input value from channels number N of the specified analog input module	5-16
$AA5VV	Enable/Disable Channels for Multiplexing	Enable or disable the individual channels in an analog module	5-17
$AA6	Read Channel Status	Get the enable/disable status of all channels in an analog module	5-18
$AA0	Span Calibration	Calibrates an analog input module to correct for gain errors	5-19
$AA1	Offset Calibration	Calibrates an analog input module to correct for offset errors	5-20
$AA3	CJC Status	Returns the value of the CJC sensor for a specified analog input module	5-25
$AA9SNNNN	CJC Offset Calibration	Calibrates the CJC sensor for offset errors	5-26

Table 4.11: ADAM-4018+ Command Table			
Command Syntax	**Command Name**	**Command Description**	**Page No.**
%AANNTTCCFF	Configuration	Sets the address, input range, baud rate, data format, checksum status, and/or integration time for a specified analog input module	5-4
$AA2	Configuration Status	Return the configuration parameters for the specified analog input module	5-10
$AAF	Read Firmware Version	Return the firmware version code from the specified analog input module	5-12
$AAM	Read Module Name	Return the module name from the specified analog input module	5-13
#AA	Read Analog Input from all Channels	Return the input values from all channels of the specified analog input module	5-14
#AAN	Read Analog Input from Channel N	Return the input value from channels number N of the specified analog input module	5-16
$AA5VV	Enable/Disable Channels for Multiplexing	Enable or disable the individual channels in an analog module	5-17
$AA6	Read Channel Status	Get the enable/disable status of all channels in an analog module	5-18
$AAB	Get Operating Status	Get the channel operating status When bit value is 0, it means this channel is in normal operating, when bit value is 1, it means this channel is opening wire	5-24
$AA3	CJC Status	Returns the value of the CJC sensor for a specified analog input module	5-25
$AA9SNNNN	CJC Offset Calibration	Calibrates the CJC sensor for offset errors	5-26
$AA0Ci	Single Channel Span Calibration	Calibrates a specified channel to correct for gain errors	5-27
$AA1Ci	Single Channel Offset Calibration	Calibrates a specified channel to correct for offset errors	5-28
$AA7CiRrr	Single Channel Range Configuration	Configure the input type and range of the specified channel in an analog input module	5-29
$AA8Ci	Read Single Channel Range Configuration	Get the input type and range of the specified channel in an analog input module	5-30
$AAXnnnn	Watchdog Timer Setting	Set communication WDT cycle time from 0000 ~ 9999 (unit: 0.1 second. if value is 0000, the communication WDT function will be disable)	5-31
$AAY	Read Watchdog Timer Setting	Read the cycle time setting of communication WDT	5-32

Table 4.12: ADAM-4018+ Input range and external calibrating input source for each input type				
Range bcode(Hex)	**Input Range**	**Max. Signal**	**Min Signal**	**Displayed Resolution**
06	+/-20 mA	+20.000	-20.000	1uA
07	4~20 mA	+20.000	+4.000	1uA
14	Type J Thermocouple			
15	Type K Thermocouple			
16	Type T Thermocouple			
17	Type E Thermocouple			
18	Type R Thermocouple			
19	Type S Thermocouple			
20	Type B Thermocouple			

Table 4.13: ADAM-4018M Command Table			
Command Syntax	**Command Name**	**Command Description**	**Page No.**
%AANNTTCCFF	Configuration	Sets the address, input range, baud rate, data format, checksum status, and/or integration time for a specified analog input module	5-4
$AA2	Configuration Status	Return the configuration parameters for the specified analog input module	5-10
$AAF	Read Version	Return the firmware version code from the specified analog input mod-ule	5-12
$AAM	Read Module Name	Return the module name from the specified analog input module	5-13
#AAN	Read Analog Input from Channel N	Return the input value from channels number N of the specified analog input module	5-16
$AA5VV	Enable/Disable Channels for Multi-plexing	Enable or disable the individual chan-nels in an analog module	5-17
$AA6	Read Channel Status	Get the enable/disable status of all channels in an analog module	5-18
$AA0	Span Calibration	Calibrates an analog input module to correct for gain errors	5-19
$AA1	Offset Calibration	Calibrates an analog input module to correct for offset errors	5-20
$AA3	CJC Status	Returns the value of the CJC sensor for a specified analog input module	5-25
$AA9SNNNN	CJC Offset Calibration	Calibrates the CJC sensor for offset errors	5-26

Table 4.13: ADAM-4018M Command Table			
$AAB	Get Operating Status	Get the channel operating status When bit value is 0, it means this channel is in normal operating, when bit value is 1, it means this channel is opening wire	5-24
$AA3	CJC Status	Returns the value of the CJC sensor for a specified analog input module	5-25
$AA9SNNNN	CJC Offset Calibration	Calibrates the CJC sensor for offset errors	5-26
@AACCCSDM-TTTT	Set Memory Configuration	Set the channel storage status, standalone mode, data logger mode, storage type and sampling interval for the specified analog input data log-ger.	5-37
@AAD	Read Memory Configuration	Return the configuration parameters for the specified analog input data logger.	5-39
@AASO	Set Memory Operation Mode	Start/stop the recording function of the memory module.	5-40
@AAT	Read Memory Operation Mode	Read the recording status of the memory module.	5-41
@AAL	Event Record Count	Read the number of stored event records in the memory module.	5-42
@AAN	Standard Record Count	Read the number of stored standard records in the memory module.	5-43
@AARNNNN	Read Record Content	Read the contents of the specified record.	5-44
@AAACSDHHHH-TEIIII	Set Alarm Limit	Set the high/low alarm settings for the specified channel.	5-46
@AABC	Read Alarm Limit	Read the high/low alarm settings for the specified channel.	5-48

Table 4.14: ADAM-4019+ Command Table			
Command Syntax	**Command Name**	**Command Description**	**Page No.**
%AANNTTCCFF	Configuration	Sets the address, input range, baud rate, data format, checksum status, and/or integration time for a specified analog input module	5-4
$AA2	Configuration Status	Return the configuration parameters for the specified analog input module	5-10
$AAF	Read Firmware Version	Return the firmware version code from the specified analog input module	5-12
$AAM	Read Module Name	Return the module name from the specified analog input module	5-13
#AA	Read Analog Input from all Channels	Return the input values from all channels of the specified analog input module	5-14
#AAN	Read Analog Input from Channel N	Return the input value from channels number N of the specified analog input module	5-16
$AA5VV	Enable/Disable Channels for Multiplexing	Enable or disable the individual channels in an analog module	5-17
$AA6	Read Channel Status	Get the enable/disable status of all channels in an analog module	5-18
$AAB	Get Operating Status	Get the channel operating status When bit value is 0, it means this channel is in normal operating, when bit value is 1, it means this channel is opening wire	5-24
$AA3	CJC Status	Returns the value of the CJC sensor for a specified analog input module	5-25
$AA9SNNNN	CJC Offset Calibration	Calibrates the CJC sensor for offset errors	5-26
$AA0Ci	Single Channel Span Calibration	Calibrates a specified channel to correct for gain errors	5-27
$AA1Ci	Single Channel Offset Calibration	Calibrates a specified channel to correct for offset errors	5-28
$AA7CiRrr	Single Channel Range Configuration	Configure the input type and range of the specified channel in an analog input module	5-29
$AA8Ci	Read Single Channel Range Configuration	Get the input type and range of the specified channel in an analog input module	5-30
$AAXnnnn	Set Communication WDT	Set communication WDT cycle time from 0000 ~ 9999 (unit: 0.1 second. if value is 0000, the communication WDT function will be disable)	5-31
$AAY	Get Communication WDT setting	Read the cycle time setting of communication WDT	5-32

Table 4.15: ADAM-4021 Command Table			
Command Syntax	**Command Name**	**Command Description**	**Page No.**
%AANNTTCCFF	Configuration	Set the address, output range, baud rate, data format, slew rate and/or checksum status	6-3
#AA(data)	Analog Data Out	Directs output data to a specified module	6-6
$AA4	Start-up output current/voltage configuration	Stores a default output value in a specified module. The output value will take effect upon startup.	6-8
$AA3(number of counts)	Trim Calibration	Trims specified module a number of units up/down	6-9
$AA0	4 mA Calibration	Tells the module to store parameters for 4 mA Calibration	6-11
$AA1	20 mA Calibration	Tells the module to store parameters for 20 mA Calibration	6-12
$AA2	Configuration Status	Reads configuration of specified module	6-13
$AA6	Last Value Readback	Returns either last value sent to specified module by #AA command, or start-up output current/voltage	6-14
$AA8	Current Readback	Returns measured value of the current/voltage flowing through current loop	6-15
$AA5	Reset Status	Checks if module has been reset since the last $AA5 command	6-16
$AAF	Read Firmware Version	Return the firmware version code from the specified analog output module	6-17
$AAM	Read Module Name	Return the module name from the specified analog output module	6-18

Table 4.16: ADAM-4024 Command Table			
Command Syntax	**Command Name**	**Command Description**	**Page No.**
%AANNTTCCFF	Configuration	Set the address, output range, baud rate, data format, slew rate and/or checksum status	6-19
#AACn(data)	Analog Data Out	Directs output data to a specified module	6-20
#AASCn(data)	Set Startup Data	Set data As CHn StartUp Data	6-20
#AAECn(data)	Set Emergency Stop	Set data As CHn Emergency Stop Data	6-20
#**	N/A	Synchrous Sample IDI	6-20
$AA0Cn	4 mA Calibration	Tells the module to store parameters for 4 mA Calibration	6-20
$AA1Cn	20 mA Calibration	Tells the module to store parameters for 20 mA Calibration	6-20
$AA2	Configuration Status	Read back Module status	6-20
$AA3Cn(number of counts)	Trim Calibration	Trims specified module a number of units up/down	6-20
$AA4	Start-up output current/voltage configuration	Stores a default output value in a specified module. The output value will take effect upon startup.	6-20
$AA5	Reset Status	Read Back Reset Times After Last $AA5 CMD And Clear This ounter	6-20
$AA6Cn	Last Value Readback	Returns either last value sent to specified module by #AA command, or start-up output current/voltage	6-20
$AA7CnRxx	Set Output Type	Set CHn Output Type	6-20
$AA8Cn	Current Readback	Returns measured value of the current/voltage flowing through current loop	6-21
$AAF	Read Firmware Version	Return the firmware version code from the specified analog output module	6-21
$AAM	Read Module Name	Return the module name from the specified analog output module	6-21
$AAACnZ	EMS Flag setting	Enable/Disable (Z=1/0) CHn EMS Flag	6-21
$AABCn	Read EMS Flag	Read CHn EMS Flag	6-21
$AADCn	Read startup data	Read Back CHn StartUp Data	6-21
$AAECn	Read emergency Stop	Read Back CHn Emergency Stop Data	6-21
$AAG	Reset Current Trim	Reset Current Trim Data Variable To 0	6-21
$AAH	Read Current Trim	Read Current Trim Data Variable	6-21
$AAI	Read IDI	Read IDI	6-21
$AANCn	Read 4mA Calibration Parameter	Read Back CHn 4mA Calibration Parameter	6-21
$AAOCn	Read 20mA Calibration Parameter	Read Back CHn 20mA Calibration Parameter	6-21

Table 4.16: ADAM-4024 Command Table			
$AAPCn	Clear 4mA Calibration Parameter	Clear CHn 4mA Calibration Parameter/EEPROM	6-21
$AAQCn	Clear 20mA Calibration Parameter	Clear CHn 20mA Calibration Parameter/EEPROM	6-21
$AAX0nnnn	Watchdog Timer Setting	Set communication W DT cycle time from 0000 ~ 9999 (unit: 0.1 second. if value is 0000, the communication W DT function will be disable)	6-21
$AAX1	Read Watchdog Timer Setting	Read the cycle time setting of communication W DT	6-21
#**	N/A	Synchrous Sample IDI	6-20
$AA0Cn	4 mA Calibration	Tells the module to store parameters for 4 mA Calibration	6-20

Table 4.17: ADAM-4050 Command Table			
Command Syntax	**Command Name**	**Command Description**	**Page No.**
%AANNTTCCFF	Configuration	Sets address, baud rate, and/or checksum status, to a digital I/O module	7-4
$AA6	Digital Data In	Returns the values of the digital I/O channels of the addressed module	7-6
#AABB(data)	Digital Data Out	Writes specified values to either a single channel or all channels simultaneously	7-8
#**	Synchronized Sampling	Orders all digital I/O modules to sample their input values and store them in a special register	7-11
$AA4	Read Synchronized Data	Return the value of a specified digital I/O module that was stored after an #** command was issued	7-12
$AA2	Configuration Status	Returns the configuration parameters of a specified digital I/O module	7-14
$AA5	Reset Status	Indicates whether a specified digital I/O module was reset after the last time the $AA5 command was issued	7-16
$AAF	Read Firmware Version	Return the firmware version code from the specified digital I/O module	7-18
$AAM	Read Module Name	Return the module name from the specified Digital I/O module	7-19

Table 4.18: ADAM-4051 Command Table			
Command Syntax	**Command Name**	**Command Description**	**Page No.**
%AANNTTCCFF	Configuration	Sets the address, baud rate, and/or checksum status to a digital I/O module	7-4
#**	Synchronized Sampling	Orders all digital I/O modules to sample their input values and store them in special registers	7-11
$AA2	Configuration Status	Returns the configuration parameters of a specified digital I/O module	7-14
$AA4	Read Synchronized Data	Returns the value of a specified digital I/O module that was stored in the specified register after an #** command was issued	7-12
$AA5	Reset Status	Indicates whether a specified digital I/O module was reset after the last time that $AA5 command was issued	7-16
$AA6	Digital Data In	Returns the values of the digital I/O channel in the addressed module	7-6
$AAF	Read Firmware Version	Return the firmware version code from the specified digital I/O module	7-18
$AAM	Read Module Name	Return the module name from the specified digital I/O module	7-19

Table 4.19: ADAM-4052 Command Table			
Command Syntax	**Command Name**	**Command Description**	**Page No.**
%AANNTTCCFF	Configuration	Sets address, baud rate, and/or checksum status, to a digital I/O module	7-4
$AA6	Digital Data In	Returns the values of the digital I/O channels of the addressed module	7-6
#**	Synchronized Sampling	Orders all digital I/O modules to sample their input values and store them in a special register	7-11
$AA4	Read Synchronized Data	Return the value of a specified digital I/O module that was stored after an #** command was issued	7-12
$AA2	Configuration Status	Returns the configuration parameters of a specified digital I/O module	7-14
$AA5	Reset Status	Indicates whether a specified digital I/O module was reset after the last time the $AA5 command was issued	7-16
$AAF	Read Firmware Version	Return the firmware version code from the specified digital I/O module	7-18
$AAM	Read Module Name	Return the module name from the specified digital I/O module	7-19
$AAXnnnn	Watchdog Timer Setting	Set communication WDT cycle time from 0000 ~ 9999 (unit: 0.1 second. if value is 0000, the communication WDT function will be disable)	7-27
$AAY	Read Watchdog Timer Setting	Read the cycle time setting of communication WDT	7-28

Table 4.20: ADAM-4053 Command Table			
Command Syntax	**Command Name**	**Command Description**	**Page No.**
%AANNTTCCFF	Configuration	Sets address, baud rate, and/or checksum status, to a digital I/O module	7-4
$AA6	Digital Data In	Returns the values of the digital I/O channels of the addressed module	7-6
#**	Synchronized Sampling	Orders all digital I/O modules to sample their input values and store them in a special register	7-11
$AA4	Read Synchronized Data	Return the value of a specified digital I/O module that was stored after an #** command was issued	7-12
$AA2	Configuration Status	Returns the configuration parameters of a specified digital I/O module	7-14
$AA5	Reset Status	Indicates whether a specified digital I/O module was reset after the last time the $AA5 command was issued	7-16
$AAF	Read Firmware Version	Return the firmware version code from the specified digital I/O module	7-18
$AAM	Read Module Name	Return the module name from the specified digital I/O module	7-19

Table 4.21: ADAM-4055 Command Table			
Command Syntax	**Command Name**	**Command Description**	**Page No.**
%AANNTTCCFF	Configuration	Sets the address, baud rate, and/or checksum status to a digital I/O module	7-4
#AABB(data)	Digital Data Out	Writes specified values to either a single channel or all channels simultaneously	7-8
#**	Synchronized Sampling	Orders all digital I/O modules to sample their input values and store them in special registers	7-11
$AA2	Configuration Status	Returns the configuration parameters of a specified digital I/O module	7-14
$AA4	Read Synchronized Data	Returns the value of a specified digital I/O module that was stored in the specified register after an #** command was issued	7-12
$AA5	Reset Status	Indicates whether a specified digital I/O module was reset after the last time that $AA5 command was issued	7-16
$AA6	Digital Data In	Returns the values of the digital I/O channel in the addressed module	7-6
$AAF	Read Firmware Version	Return the firmware version code from the specified digital I/O module	7-18
$AAM	Read Module Name	Return the module name from the specified digital I/O module	7-19
$AAX0TTTTDD	Write Safety Value	Force the DO channels to safety status when communication is time-out and over pre-defined period.	7-21
$AAX1	Read Safety Value	Read the time-out setting and pre-defined safety status of DO channels.	7-22
$AAX2	Read Safety Flag	Requests the Safty Flag of the addressed digital I/O module to see whether the safety value has been executed since Write Safety Value command was set.	7-23

Table 4.22: ADAM-4056S Command Table			
Command Syntax	**Command Name**	**Command Description**	**Page No.**
%AANNTTCCFF	Configuration	Sets the address, baud rate, and/or checksum status to a digital I/O module	7-4
#AABB(data)	Digital Data Out	Writes specified values to either a single channel or all channels simul-taneously	7-8
$AA2	Configuration Status	Returns the configuration parame-ters of a specified digital I/O module	7-14
$AA5	Reset Status	Indicates whether a specified digital I/O module was reset after the last time that $AA5 command was issued	7-16
$AA6	Digital Data In	Returns the values of the digital I/O channel in the addressed module	7-6
$AAF	Read Firmware Version	Return the firmware version code from the specified digital I/O module	7-18
$AAM	Read Module Name	Return the module name from the specified digital I/O module	7-19
$AAX0TTTTDD	Write Safety Value	Force the DO channels to safety status when communication is time-out and over pre-defined period.	7-21
$AAX1	Read Safety Value	Read the time-out setting and pre-defined safety status of DO channels.	7-22
$AAX2	Read Safety Flag	Requests the Safty Flag of the addressed digital I/O module to see whether the safety value has been executed since Write Safety Value command was set.	7-23
$AAXnnnn	Watchdog Timer Setting	Set communication WDT cycle time from 0000 ~ 9999 (unit: 0.1 second. if value is 0000, the communication WDT function will be disable)	7-27
$AAY	Read Watchdog Timer Setting	Read the cycle time setting of communication WDT	7-28

Table 4.23: ADAM-4056SO Command Table			
Command Syntax	**Command Name**	**Command Description**	**Page No.**
%AANNTTCCFF	Configuration	Sets the address, baud rate, and/or checksum status to a digital I/O module	7-4
#AABB(data)	Digital Data Out	Writes specified values to either a single channel or all channels simultaneously	7-8
$AA2	Configuration Status	Returns the configuration parameters of a specified digital I/O module	7-14
$AA5	Reset Status	Indicates whether a specified digital I/O module was reset after the last time that $AA5 command was issued	7-16
$AA6	Digital Data In	Returns the values of the digital I/O channel in the addressed module	7-6
$AAF	Read Firmware Version	Return the firmware version code from the specified digital I/O module	7-18
$AAM	Read Module Name	Return the module name from the specified digital I/O module	7-19
$AAX0TTTTDD	Write Safety Value	Force the DO channels to safety status when communication is time-out and over pre-defined period.	7-21
$AAX1	Read Safety Value	Read the time-out setting and pre-defined safety status of DO channels.	7-22
$AAX2	Read Safety Flag	Requests the Safety Flag of the addressed digital I/O module to see whether the safety value has been executed since Write Safety Value command was set.	7-23
$AAE0	Read and Clear Over Current Status Flag	Read the Over Current Status Flag and Clear the Flag simultaneously	7-24
$AAXnnnn	Watchdog Timer Setting	Set communication WDT cycle time from 0000 ~ 9999 (unit: 0.1 second. if value is 0000, the communication WDT function will be disable)	7-27
$AAY	Read Watchdog Timer Setting	Read the cycle time setting of communication WDT	7-28

Table 4.24: ADAM-4060/4068 Command Table			
Command Syntax	**Command Name**	**Command Description**	**Page No.**
%AANNTTCCFF	Configuration	Sets address, baud rate, and/or checksum status, to a digital I/O module	7-4
$AA6	Digital Data In	Returns the values of the digital I/O channels of the addressed module	7-6
#AABB(data)	Digital Data Out	Writes specified values to either a single channel or all channels simultaneously	7-8
#**	Synchronized Sampling	Orders all digital I/O modules to sample their input values and store them in a special register	7-11
$AA4	Read Synchronized Data	Return the value of a specified digital I/O module that was stored after an #** command was issued	7-12
$AA2	Configuration Status	Returns the configuration parameters of a specified digital I/O module	7-14
$AA5	Reset Status	Indicates whether a specified digital I/O module was reset after the last time the $AA5 command was issued	7-16
$AAF	Read Firmware Version	Return the firmware version code from the specified digital I/O module	7-18
$AAM	Read Module Name	Return the module name from the specified digital I/O module	7-19
$AAX0TTTTDD	Write Safety Value	Force the DO channels to safety status when communication is time-out and over pre-defined period.	7-21
$AAX1	Read Safety Value	Read the time-out setting and pre-defined safety status of DO channels.	7-22
$AAX2	Read Safety Flag	Requests the Safety Flag of the addressed digital I/O module to see whether the safety value has been executed since Write Safety Value command was set.	7-23

Table 4.25: ADAM-4069 Command Table			
Command Syntax	**Command Name**	**Command Description**	**Page No.**
%AANNTTCCFF	Configuration	Sets address, baud rate, and/or checksum status, to a digital I/O module	7-4
$AA6	Digital Data In	Returns the values of the digital I/O channels of the addressed module	7-6
#AABB(data)	Digital Data Out	Writes specified values to either a single channel or all channels simultaneously	7-8
$AA2	Configuration Status	Returns the configuration parameters of a specified digital I/O module	7-14
$AA5	Reset Status	Indicates whether a specified digital I/O module was reset after the last time the $AA5 command was issued	7-16
$AAF	Read Firmware Version	Return the firmware version code from the specified digital I/O module	7-18
$AAM	Read Module Name	Return the module name from the specified digital I/O module	7-19
$AAX0TTTTDD	Write Safety Value	Force the DO channels to safety status when communication is time-out and over pre-defined period.	7-21
$AAX1	Read Safety Value	Read the time-out setting and pre-defined safety status of DO channels.	7-22
$AAP	Read low power status	The command requests the module at address AA to return the low power status of module	7-25
$AAS	Set low power status	The command requests the module at address AA to set and return the low power mode of module	7-26

Table 4.26: ADAM-4080 Command Table			
Command Syntax	**Command Name**	**Command Description**	**Page No.**
%AANNTTCCFF	Configuration	Sets the address, input mode, baud rate, checksum status and/or frequency gate time for a specified counter/ frequency module	7-28

Table 4.26: ADAM-4080 Command Table			
$AA2	Configuration Status	Returns configuration parameters from the specified counter/frequency module	7-30
$AAF	Read Firmware Version	Return firmware version code from the specified counter/frequency module	7-31
$AAM	Read Module Name	Return the module name from the specified counter/frequency module	7-32
$AABS	Set Input Signal Mode	Sets the input signal mode of the specified counter/frequency module to either non-isolated or photo-isolated input signals	7-33
$AAB	Read Input Signal Mode	Read the input signal mode of the specified counter/frequency module.	7-34
#AAN	Read Counter or Frequency Value	Returns the value of counter 0 or counter 1 from a specified counter/frequency module in hex format	7-35
$AAAG	Set Gate Mode	Requests the specified counter/frequency module to set its gate mode to either high, low or disabled	7-40
$AAA	Read Gate Mode	Requests the specified counter/frequency module to return the status of its gate mode	7-41
$AA3N(data)	Set Maximum Counter Value	Sets the maximum value of counter 0 or counter 1 for the specified counter/frequency module	7-42
$AA3N	Read Maximum Counter Value	Reads the maximum value of counter 0 or counter 1 of the specified counter/frequency module	7-43
$AA5NS	Start/Stop Counter	The command orders the specified counter/frequency module to start or stop counting	7-44
$AA5N	Read Counter Start/Stop Status	The addressed counter frequency module returns its status indicating whether counting is enabled or disabled	7-45
$AA6N	Clear Counter	The command clears the counter 0 or counter 1 of the specified counter module	7-46
$AA7N	Read Overflow Flag	The addressed module returns the status of the overflow flag of counter 0 or counter 1	7-47
$AA4S	Enable/Disable Digital Filter	Enables or disables the digital filter of the addressed counter/frequency module	7-49
$AA4	Read Filter Status	The addressed counter frequency module returns the status of its digital filter	7-50
$AA0H(data)	Set Minimum Input Signal Width at High Level	Sets the minimum input signal width at high level for a specified counter/frequency module	7-51

Table 4.26: ADAM-4080 Command Table			
$AA0H	Read Minimum Input Signal Width at High Level	Reads the minimum input signal width setting at high level for a specified counter/frequency module	7-52
$AA0L(data)	Set Minimum Input Signal Width at Low Level	Sets the minimum input signal width at low level for a specified counter/ frequency module	7-53
$AA0L	Read Minimum Input Signal Width at Low Level	Reads minimum input signal width setting at low level for a specified counter/frequency module	7-54
$AA1H(data)	Set Non-isolated High Trigger Level	Sets the high trigger level of non-isolated input signals for a specified counter/frequency module	7-55
$AA1H	Read Non-isolated High Trigger Level	Requests the addressed counter frequency module to return the high trigger level for non-	7-56
$AA1L(data)	Set Non-isolated Low Trigger Level	isolated input signals	7-57
$AA1L	Read Non-isolated Low Trigger Level	Sets the low trigger level of non-isolated input signals for a specified counter/frequency module	7-58
@AAPN(data)	Set Initial Count Value of Counter N	Sets the initial count value of the module for counter 0 or counter 1	7-61
@AAGN	Read Initial Count Value of Counter N	Reads the initial count value of counter 0 or counter 1	7-62
@AAEAN	Enable Alarm of Counter N	Enable alarm for the specified counter 0 or counter 1	7-63
@AADAN	Disable Alarm of Counter N	Disable alarm for the specified counter 0 or counter 1	7-64
@AAPA(data)	Set Alarm Limit Value of Counter 0	Download the alarm limit value for counter 0 of the specified module	7-65
@AASA(data)	Set Alarm Limit Value of Counter 1	Download the alarm limit value for counter 1 of the specified module	7-65
@AARP	Read Alarm Limit Value of Counter 0	Ask the module to return the alarm limit value of counter 0	7-66
@AARA	Read Alarm Limit Value of Counter 1	Ask the module to return the alarm limit value of counter 1	7-66
@AADO (data)	Set Digital Output Values	Set the values of the module's two digital outputs (ON or OFF)	7-67
@AADI	Read Digital Output and Alarm Status	Ask the module to return the status state of its two digital outputs and the status of its alarm.	7-68

No.

Table 4.27: ADAM-4080D Command Table			
Command Syntax	**Command Name**	**Command Description**	**Page No.**

Table 4.27: ADAM-4080D Command Table			
%AANNTTCCFF	Configuration	Sets the address, input mode, baud rate, checksum status and/or frequency gate time for a specified counter/ frequency module	7-28
$AA2	Configuration Status	Returns configuration parameters from the specified counter/frequency module	7-30
$AAF	Read Firmware Version	Return firmware version code from the specified counter/frequency module	7-31
$AAM	Read Module Name	Return the module name from the specified counter/frequency module	7-32
$AABS	Set Input Signal Mode	Sets the input signal mode of the specified counter/frequency module to either non-isolated or photo-isolated input signals	7-33
$AAB	Read Input Signal Mode	Read the input signal mode of the specified counter/frequency module.	7-34
#AAN	Read Counter or Frequency Value	Returns the value of counter 0 or counter 1 from a specified counter/ frequency module in hex format	7-35
$AA8V	Select LED Data Origin	Select whether LED will display data from the counter/frequency module directly or from the host computer	7-36
$AA8	Read LED Data Origin	Returns the status of the LED Data origin. Origin is either direct from module or from host computer	7-37
$AA9(data)	Send Data to LED	The host computer sends data to the addressed module to display on its LED. This command is valid only after selecting to display host computer data ($AA8V)	7-38
$AAAG	Set Gate Mode	Requests the specified counter/ frequency module to set its gate mode to either high, low or disabled	7-40
$AAA	Read Gate Mode	Requests the specified counter/ frequency module to return the status of its gate mode	7-41
$AA3N(data)	Set Maximum Counter Value	Sets the maximum value of counter 0 or counter 1 for the specified counter/frequency module	7-42
$AA3N	Read Maximum Counter Value	Reads the maximum value of counter 0 or counter 1 of the specified counter/ frequency module	7-43
$AA5NS	Start/Stop Counter	The command orders the specified counter/frequency module to start or stop counting	7-44
$AA5N	Read Counter Start/Stop Status	The addressed counter frequency module returns its status indicating whether counting is enabled or disabled	7-45
$AA6N	Clear Counter	The command clears the counter 0 or counter 1 of the specified counter module	7-46

Table 4.27: ADAM-4080D Command Table			
$AA7N	Read Overflow Flag	The addressed module returns the status of the overflow flag of counter 0 or counter 1	7-47
$AA4S	Enable/Disable Digital Filter	Enables or disables the digital filter of the addressed counter/frequency module	7-49
$AA4	Read Filter Status	The addressed counter frequency module returns the status of its digital filter	7-50
$AA0H(data)	Set Minimum Input Signal Width at High Level	Sets the minimum input signal width at high level for a specified counter/frequency module	7-51
$AA0H	Read Minimum Input Signal Width at High Level	Reads the minimum input signal width setting at high level for a specified counter/frequency module	7-52
$AA0L(data)	Set Minimum Input Signal Width at Low Level	Sets the minimum input signal width at low level for a specified counter/frequency module	7-53
$AA0L	Read Minimum Input Signal Width at Low Level	Reads minimum input signal width setting at low level for a specified counter/frequency module	7-54
$AA1H(data)	Set Non-isolated High Trigger Level	Sets the high trigger level of non-isolated input signals for a specified counter/frequency module	7-55
$AA1H	Read Non-isolated High Trigger Level	Requests the addressed counter frequency module to return the high trigger level for non-isolated input signals	7-56
$AA1L(data)	Set Non-isolated Low Trigger Level	Sets the low trigger level of non-isolated input signals for a specified counter/frequency module	7-57
$AA1L	Read Non-isolated Low Trigger Level	Sets the low trigger level of non-isolated input signals for a specified counter/frequency module	7-58
@AAEAT	Enable Alarm	Enable the alarm in either momentary or latching mode	7-69
@AADA	Disable Alarm	Disable all alarm functions	7-70
@AACA	Clear Latch Alarm	The latch alarm is reset	7-71
@AAPA(data)	Set Low-Alarm Count Value of Counter 0	Downloads the low-alarm count value for counter 0 of the specified counter/frequency module	7-72
@AASA(data)	Set High-Alarm Count Value of Counter 0	Downloads the high-alarm count value for counter 0 of the specified counter/frequency module	7-73
@AARP	Read Low-Alarm Count Value of Counter 0	Ask the addressed module to return its low-alarm count value for counter 0	7-74
@AARA	Read High-Alarm Count Value of Counter 0	Ask the addressed module to return its high-alarm count value for counter 0	7-75
@AADO(data)	Set Digital Output Values	Set the values of the module's two digital outputs(ON or OFF)	7-67

Table 4.27: ADAM-4080D Command Table			
@AADI	Read Digital Output and Alarm Status	Ask the module to return the status state of its two digital outputs and the status of its alarm.	7-68

Chapter 5

Analog Input Module Command Set

5.1 Analog Input Common Command Set

Command Syntax	Description	I/O Module
%AANNTTCCFF	Sets the address, input range, baud rate, data format, checksum status, and/or integration time for a specified analog input module	4011, 4011D, 4012, 4013, 4015, 4015T, 4016, 4017, 4017+, 4018, 4018+, 4018M, 4019+
$AA2	Returns the configuration parameters for the specified analog input module	4011, 4011D, 4012, 4013, 4015, 4015T, 4016, 4017, 4017+, 4018, 4018+, 4018M, 4019+
$AAF	Returns the firmware version code from the specified analog input module	4011, 4011D, 4012, 4013, 4015, 4015T, 4016, 4017, 4017+, 4018, 4018+, 4018M, 4019+
$AAM	Returns the module name from the specified analog input module	4011, 4011D, 4012, 4013, 4015, 4015T, 4016, 4017, 4017+, 4018, 4018+, 4018M, 4019+
#AA	Returns the input value from a specified analog input moudule in the currently configured data format	4011, 4011D, 4012, 4013, 4015, 4015T, 4016, 4017, 4017+, 4018, 4018+, 4019+
#AAN	Returns the input value from channel number n of the specified analog input module	4015, 4015T, 4017, 4017+, 4018, 4018+, 4018M, 4019+
$AA5VV	Enables/disables multiplexing simultaneously for separate channels of the specified input module	4015, 4015T, 4017, 4017+, 4018, 4018+, 4018M, 4019+
$AA6	Ask the specified input module to return the status of all eight channels	4015, 4015T, 4017, 4017+, 4018+, 4018, 4018M, 4019+
$AA0	Calibrate the analog input module to correct for gain errors	4011, 4011D, 4012, 4013, 4016, 4017, 4018, 4018M
$AA1	Calibrate the analog input module to correct for offset errors.	4011, 4011D, 4012, 4013, 4016, 4017, 4018, 4018M
#**	Orders all analog input modules to sample their input values and store them in special registers	4011, 4011D, 4012, 4013, 4015, 4015T, 4016
$AA4	Returns the value that was stored in the specified module's register after the #** command	4011, 4011D, 4012, 4013, 4015, 4015T, 4016
$AAB	Ask the module to respond whether the wiring is open or closed	4011D, 4015, 4015T, 4018+, 4019+
$AA3	Returns the value of the CJC sensor for a specified analog input module	4011, 4011D, 4018, 4018+, 4018M, 4019+
$AA9	Calibrates the CJC sensor for offset errors	4011, 4011D, 4018, 4018+, 4018M 4019+
$AA0Ci	Calibrates a specified channel to correct for gain errors	4015, 4015T, 4017+, 4018+, 4019+
$AA1Ci	Calibrates a specified channel to correct for offset errors	4015, 4015T, 4017+, 4018+, 4019+

$AA7CiRrr	Configure the input type and range of the specified channel in an analog input module	4015, 4015T, 4017+, 4018+, 4019+
$AA8Ci	Get the input type and range of the specified channel in an analog input module	4015, 4015T, 4017+, 4018+, 4019+
$AAXnnnn	Communication Watchdog Timer Setting	4015, 4015T, 4017+, 4018+,4019+
$AAY	Read Communication Watchdog Timer Setting	4015, 4015T, 4017+, 4018+, 4019+
$AAS0	Internal self-calibration for offset and gain errors	4015, 4015T
$AAS1	Reload factory default calibrating parameter to overwrite current calibrating parameter	4015, 4015T

4011, 4011D, 4012, 4013, 4015, 4015T, 4016, 4017, 4017+, 4018, 4018+, 4018M, 4019+

5.1.1 %AANNTTCCFF

Name Configuration command

Description Sets address, input range, baud rate, data format, checksum status, and/or integration time for an analog input module.

Syntax **%AANNTTCCFF(cr)**

% is a delimiter character.

AA (range 00-FF) represents the 2-character hexadecimal address of the analog input module you want to configure.

NN represents the new hexadecimal address of the analog input module. Range is from 00h to FFh.

TT represents the type (input range) code. (Note: 4015 and 4019 must be 00)

(Refer to Table 5-1 on Page 5-6)

CC represents the baud rate code.

(Refer to Table 5-2 on Page 5-8)

FF is a hexadecimal number that equals the 8-bit parameter representing the data format, checksum status and integration time. The layout of the 8-bit parameter is shown in Figure 5-1. Bits 2 through 5 are not used and are set to 0.

(cr) is the terminating character, carriage return (0Dh)

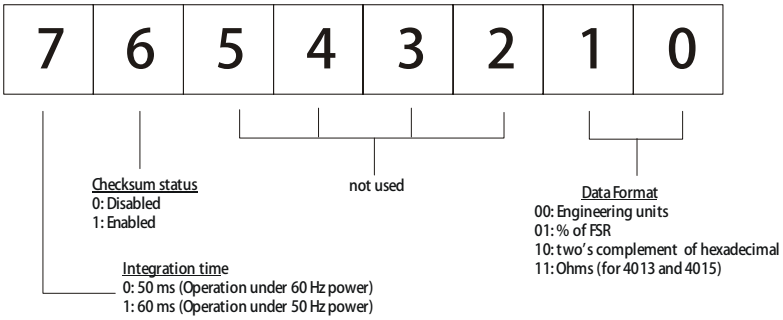

Figure 5.1 Data format for FF (8-bit parameter)

Response **!AA(cr)** if the command is valid.
?AA(cr) if an invalid parameter was entered or if the INIT* terminal was not grounded when attempting to change baud rate or checksum settings.
There is no response if the module detects a syntax error or communication error or if the specified address does not exist.
! delimiter character indicates a valid command was received.
? delimiter character indicates the command was invalid
AA (range 00-FF) represents the 2-character hexadecimal address of an analog input module.
(cr) is the terminating character, carriage return (0Dh)

Example command:%2324050600(cr)
response: !24(cr)
The ADAM-4011 module with address 23h is configured to a new address of 24h, an input range ±2.5 V, baud rate 9600, integration time 50 ms (60 Hz), engineering units data format and no checksum checking or generation.
The response indicates that the command was received.
Wait 7 seconds to let the new configuration settings take effect before issuing a new command to the module.

Caution! *Only ADAM-4011, ADAM-4011D, ADAM-4012, ADAM-4013, ADAM-4016 and ADAM-4018+ support "% of FSR" and "two's complement of hexadecimal" Data Format.*

Caution! *An analog input module requires a maximum of 7 seconds to perform auto calibration and ranging after it is reconfigured.*
During this time span, the module cannot be addressed to perform any other actions.

Caution! *All configuration parameters can be changed dynamically, except checksum and baud rate parameters. They can only be altered when the INIT* terminal is grounded. (Refer to Baud rate and Checksum configuration in Chapter 2, for the correct procedure)*

Table 5.1: Input Range Codes (Type Codes)	
Input Range Code (Hex)	**Input Range for 4011, 4011D, 4018, 4018+ (Thermocouple and ± 20 mA only), 4018M**
00	± 15 mV
01	± 50 mV
02	± 100 mV
03	± 500 mV
04	± 1 V
05	± 2.5 V
06	± 20 mA
0E	Type J Thermocouple 0 ~ 760 °C
0F	Type K Thermocouple 0 ~ 13700 °C
10	Type T Thermocouple -100 ~ 400 °C
11	Type E Thermocouple 0 ~ 1000 °C
12	Type R Thermocouple 500 ~ 1750 °C
13	Type S Thermocouple 500 ~ 1750 °C
14	Type B Thermocouple 500 ~ 1800 °C
Input Range Code(Hex)	**Input Range for 4012,4017,4017+**
08	± 10 V
09	± 5 V
0A	± 1 V
0B	± 500 mV
0C	± 150 mV
0D	± 20 mA
Notice: The input range requires the usage of a 125 Ω current conversion resistor	
Input Rage Code (Hex)	**Input Range for 4016**
00	±15 mV
01	±50 mV
02	±100 mV
03	±500 mV
06	±20 mA
Input Range Code (Hex)	**Input Range for 4013**
20	Platinum, -100 ~ 100 °C, a=0.00385
21	Platinum, 0 ~ 100 °C, a=0.00385
22	Platinum, 0 ~ 200 °C, a=0.00385
23	Platinum, 0 ~ 600 °C, a=0.00385
24	Platinum, -100 ~ 100 °C, a=0.003916
25	Platinum, 0 ~ 100 °C, a=0.003916
26	Platinum, 0 ~ 200 °C, a=0.003916
27	Platinum, 0 ~ 600 °C, a=0.003916
28	Nickel, -80 ~ 100 °C
29	Nickel, 0 ~ 100 °C

Table 5.2: ADAM-4015/4015T command codes against Input ranges table

Command Code (Hex)	Input Type	Input Range
20	Platinum 100 (IEC)	-50 ~ 150 °C
21	Platinum 100 (IEC)	0 ~ 100 °C
22	Platinum 100 (IEC)	0 ~ 200 °C
23	Platinum 100 (IEC)	0 ~ 400 °C
24	Platinum 100 (IEC)	-200 ~ 200 °C
25	Platinum 100 (JIS)	-50 ~ 150 °C
26	Platinum 100 (JIS)	0 ~ 100 °C
27	Platinum 100 (JIS)	0 ~ 200 °C
28	Platinum 100 (JIS)	0 ~ 400 °C
29	Platinum 100 (JIS)	-200 ~ 200 °C
2A	Platinum 1000	-40 ~ 160 °C
2B	BALCO 500	-30 ~ 120 °C
2C	Ni 604	-80 ~ 100 °C
2D	Ni 604	0 ~ 100 °C
30	Thermistor 3K	0 ~ 100 °C
31	Thermistor 10K	0 ~ 100 °C
33	Ni 508	-50 ~ 200 °C
IEC RTD 100O, α = 0.00385 JIS RTD 100O, α = 0.00391		

Input Range Code (Hex)	Input Range for 4019+
02	± 100 mV
03	± 500 mV
04	± 1 V
05	± 2.5 V
07	+4~20mA
08	± 10 V
09	± 5 V
0D	± 20 mA
0E	Type J Thermocouple 0 ~ 760 °C
0F	Type K Thermocouple 0 ~1370 °C
10	Type T Thermocouple -100 ~ 400 °C
11	Type E Thermocouple 0 ~ 1000 °C
12	Type R Thermocouple 500 ~ 1750 °C
13	Type S Thermocouple 500 ~ 1750 °C
14	Type B Thermocouple 500 ~ 1800 °C

Table 5.3: Baud Rate Codes	
Baud Rate Code (Hex)	**Baud Rate**
03	1200 bps
04	2400 bps
05	4800 bps
06	9600 bps
07	19.2 kbps
08	38.4 kbps

4011, 4011D, 4012, 4013, 4015, 4015T, 4016, 4017, 4017+, 4018, 4018+, 4018M, 4019+

5.1.2 $AA2

Name Configuration Status command

Description The command requests the return of the configuration data from the analog input module at address AA.

Syntax **$AA2(cr)**

$ is a delimiter character.

AA (range 00-FF) represents the 2-character hexadecimal address of the analog input module that you want to interrogate.

2 is the Configuration Status command.

(cr) is the terminating character, carriage return (0Dh).

Response **!AATTCCFF(cr)** if the command is valid.

?AA(cr) if an invalid operation was entered.

There is no response if the module detects a syntax error or communication error or if the specified address does not exist.

! delimiter character indicates a valid command was received.

? delimiter character indicates the command was invalid.

AA (range 00-FF) represents the 2-character hexadecimal address of an analog input module.

TT represents the type code. Type code determines the input range.

CC represents the baud rate code.

FF is a hexadecimal number that equals the 8-bit parameter that represents the data format, checksum status and integration time. The layout of the 8-bit parameter is shown in figure 4-1. Bits 2 to 5 are not used, and are set to 0.

(cr) is the terminating character, carriage return (0Dh).

(Please refer to %AANNTTCCFF configuration command to see TT, CC and FF parameter definition)

Example command: $452(cr)
response: !45050600(cr)
The command asks the analog input module at address 45h to send its configuration data.
The analog input module at address 45h responds with an input range of 2.5 volts, a baud rate of 9600 bps, an integration time of 50 ms (60 Hz), engineering units are the currently configured data format, and no checksum function or checksum generation.

4011, 4011D, 4012, 4013, 4015, 4015T, 4016, 4017, 4017+, 4018, 4018+, 4018M, 4019+

5.1.3 $AAF

Name Read Firmware Version command

Description The command requests the analog input module at address AA to return the version code of its firmware.

Syntax **$AAF (cr)**
$ is a delimiter character.
AA (range 00-FF) represents the 2-character hexadecimal address of the analog input module that you want to interrogate.
F is the Read Firmware Version command.
(cr) is the terminating character, carriage return (ODh).

Response **!AA(Version)(cr)** if the command is valid.
There is no response if the module detects a syntax error or communication error, or if the specified address does not exist.
! is a delimiter character indicating a valid command was received.
AA (range 00-FF) represents the 2-character hexadecimal address of an analog input module.
(Version) is the version code of the module's firmware at address AA.
(cr) is the terminating character, carriage return (ODh).

4011, 4011D, 4012, 4013, 4015, 4015T, 4016, 4017, 4017+, 4018, 4018+, 4018M, 4019+

5.1.4 $AAM

Name	Read Module Name command
Description	The command requests the analog input module at address AA to return its name.
Syntax	**$AAM (cr)** **$** is a delimiter character. **AA** (range 00-FF) represents the 2-character hexadecimal address of the analog input module that you want to interrogate. **M** is the Read Module Name command. **(cr)** is the terminating character, carriage return (ODh).
Response	**!AA(Module Name)(cr)** if the command is valid. There is no response if the module detects a syntax error or communication error, or if the specified address does not exist. **!** is a delimiter character indicating a valid command was received. **AA** (range 00-FF) represents the 2-character hexadecimal address of an analog input module. **(Module Name)** is the name of the module at address AA. **(cr)** is the terminating character, carriage return (ODh).

4011, 4011D, 4012, 4013, 4015, 4015T, 4016, 4017, 4017+, 4018, 4018+, 4018M, 4019+

5.1.5 #AA

Name Analog Data In command

Description The command will return the input value from a specified (AA) module in the currently configured data format.

Syntax **#AA(cr)**

is a delimiter character.

AA (range 00-FF) represents the 2-character hexadecimal address of an analog input module.

(cr) is the terminating character, carriage return (0Dh).

Response **>(data)(cr)**

There is no response if the module detects a syntax error or communication error or if the specified address does not exist.

> is a delimiter character.

(data) is the input value in the configured data format of the interrogated module.

(For data formats, see Appendix B).

(cr) is the terminating character, carriage return (0Dh).

Example command: #21(cr)

response: >+7.2111+7.2567+7.3125+7.1000
+7.4712+7.2555+7.1234+7.5678 (cr)

The command interrogates the analog input module at address 21h for its input values of all channels.

The analog input module responds with channels from 0 to 7 with +7.2111 volts, +7.2567 volts, +7.3125 volts, +7.1000 volts, +7.4712 volts, +7.2555 volts, +7.1234 volts and +7.5678 volts.

Example command: #DE(cr)

response: >FF5D(cr)

The analog input module at address DEh has an input value of FF5D. (The configured data format of the analog input module is two's complement)

	Two's complement	% of Span	Engineering units
under	0000	-0000	-0000
over	FFFF	+9999	+9999

Caution! *When modules measure Thermocouple or RTD input values that are outside their configured range they will send data that implies input out of bounds. The next table shows the values that the modules will return, depending on the configured data format and if the input value falls under or exceeds the configured range.*

Only when modules are configured for Thermocouple or RTD, "input out of bounds" warning will occur. When analog input modules measure voltage or current that falls outside the configured range, they will return the actual measured input!

In the next example the target module is configured for an input range of T/C type J (Input range: 0 ~ 760 ?) and for a data format in engineering units. The module measures an input value of 820 °C.

Example

command: #D1(cr)
response: >+9999(cr)
By returning a high value, +9999, the module at address D1h indicates that the measured input value exceeds the configured range.

4015, 4015T, 4017, 4017+, 4018, 4018+, 4018M, 4019+

5.1.6 #AAN

Name Read Analog Input from Channel N command

Description The command will return the input value from one of the eight channels of a specified (AA) module in the currently configured data format.

Syntax **#AAN(cr)**

is a delimiter character.

AA (range 00-FF) represents the 2-character hexadecimal address of the analog input module.

N identifies the channel you want to read. The value can range from 0 to 7 for 4017, 4018, 4018M, 4019. (The range of 4015 is from 0 to 5)

(cr) is the terminating character, carriage return (0Dh).

Response **>(data)(cr)**

There is no response if the module detects a syntax error or communication error or if the specified address does not exist.

> is a delimiter character.

(data) is the input value of the channel number N. Data consists of a + or - sign followed by five decimal digits with a fixed decimal point.

(cr) is the terminating character, carriage return (0Dh).

Example command: #120(cr)

response: >+1.4567(cr)

The command requests the analog input module at address 12h to return the input value of channel 0.

The analog input module responds that the input value of channel 0 is equal to +1.4567 volts.

4015, 4015T, 4017, 4017+, 4018, 4018+, 4018M, 4019+

5.1.7 $AA5VV

Name Enable/disable Channels for Multiplexing command

Description Enables/disables multiplexing simultaneously for separate channels of a specified input module.

Syntax **$AA5VV(cr)**

$ is a delimiter character.

AA (range 00-FF) represents the 2-character hexadecimal address of analog input module.

5 is the Enable/disable Channels command.

VV are two hexadecimal values. The values are interpreted by the module as two binary words (4-bit). The first word represents the status of channel 4~7, and the second word represents the status of channel 0~3. Value 0 means the channel is disabled, value 1 means the channel is enabled.

(cr) is the terminating character, carriage return (0Dh).

Response **!AA(cr)** if the command is valid.

?AA(cr) if an invalid operation was entered.

There is no response if the module detects a syntax error or communication error or if the specified address does not exist.

! delimiter character indicates a valid command was received.

? delimiter character indicates the command was invalid.

AA (range 00-FF) represents the 2-character hexadecimal address of an analog input module.

(cr) is the terminating character, carriage return (0Dh).

Example command: $00581(cr)

response: !00(cr)

Hexadecimal 8 equals binary 1000, which enables channel 7 and disables channels 4, 5, and 6.

Hexadecimal 1 equals binary 0001, which enables channel 0 and disables channel 1, 2, and 3.

4015, 4015T, 4017, 4017+, 4018, 4018+, 4018M, 4019+

5.1.8 $AA6

Name Read Channel Status command

Description Asks a specified input module to return the status of all channels.

Syntax **$AA6(cr)**

AA (range 00-FF) represents the 2-character hexadecimal address of analog input module of which the channel status you want to send. The channel status defines whether a channel is enabled or disabled.

6 is the Read Channel Status command.

(cr) is the terminating character, carriage return (0Dh).

Response **!AAVV(cr)** if the command is valid.

?AA(cr) if an invalid operation was entered.

There is no response if the module detects a syntax error or communication error or if the specified address does not exist.

! delimiter character indicates a valid command was received.

? delimiter character indicates the command was invalid.

AA (range 00-FF) represents the 2-character hexadecimal address of an analog input module.

VV are two hexadecimal values. The values are interpreted by the module as two binary words (4-bit). The first word represents the status of channel 4-7, and the second word represents the status of channel 0-3. Value 0 means the channel is disabled, value 1 means the channel is enabled.

(cr) is the terminating character, carriage return (0Dh).

Example command: $026(cr)

response: !02FF(cr)

The command asks the analog input module at address 02 to send the status of it input channels. The analog input module at address 02 responds that all its multiplex channels are enabled (FF equals 1111 and 1111).

4011, 4011D, 4012, 4013, 4016, 4017, 4018, 4018M

5.1.9 $AA0

Name Span Calibration command

Description Calibrates an analog input module to correct for gain errors.

Syntax **$AA0(cr)**

$ is a delimiter character.

AA (range 00-FF) represents the 2-character hexadecimal address of the analog input module which is to be calibrated.

0 is the Span Calibration command.

(cr) is the terminating character, carriage return (0Dh).

Response **!AA(cr)** if the command was valid.

?AA(cr) if an invalid operation was entered.

There is no response if the module detects a syntax error or communication error or if the specified address does not exist.

! delimiter character indicates a valid command was received.

? delimiter character indicates the command was invalid.

AA (range 00-FF) represents the 2-character hexadecimal address of the analog input module.

(cr) represents terminating character, carriage return (0Dh).

In order to successfully calibrate an analog input module's input range, a proper calibration input signal should be connected to the analog input module before and during the calibration. (See also Chapter 8, Calibration)

Caution! *An analog input module requires a maximum of 7 seconds to perform auto calibration and ranging after it received a Span Calibration command. During this interval, the module can not be addressed to perform any other actions.*

4011, 4011D, 4012, 4013,
4016, 4017, 4018, 4018M

5.1.10 $AA1

Name Offset Calibration command

Description Calibrates an analog input module to correct for offset errors.

Syntax **$AA1(cr)**

$ is a delimiter character.

AA (range 00-FF) represents the 2-character hexadecimal address of the analog input module you want to calibrate.

1 is the Offset Calibration command.

(cr) is the terminating character, carriage return (0Dh).

Response **!AA(cr)** if the command is valid.

?AA(cr) if an invalid operation was entered.

There is no response if the module detects a syntax error or communication error or if the specified address does not exist.

! delimiter character indicates a valid command was received.

? delimiter character indicates the command was invalid.

AA (range 00-FF) represents the 2-character hexadecimal address of the analog input module.

(cr) represents terminating character, carriage return (0Dh).

In order to successfully calibrate an analog input module's input range, a proper calibration input signal should be connected to the analog input module before and during the calibration. (See also Chapter 8, Calibration)

Caution! *An analog input module requires a maximum of 7 seconds to perform auto calibration and ranging after it received an Offset Calibration command. During this interval, the module can not be addressed to perform any other actions.*

4011, 4011D, 4012, 4013,
4015, 4015T, 4016

5.1.11 #**

Name Synchronized Sampling mand com

Description Orders all analog input modules to sample their input values and store the values in special registers.

Syntax **#****
is a delimiter character.
** is the Synchronized Sampling command.
The terminating character, in the form of a carriage return (0Dh), is not required.

Response The analog input modules will send no response after executing the synchronized sampling command. In order to retrieve the data, a separate Read Synchronized Data command has to be issued for every analog input module. The pound sign (#) followed by two asterisks (**) does not represent an optional value, but is the actual command string.

4011, 4011D, 4012, 4013,
4015, 4015T, 4016

5.1.12 $AA4

Name Read Synchronized Data command

Description Returns the input value that was stored in the addressed module's register, after a Synchronized Sampling command #** was issued.

Syntax **$AA4(cr)**
$ is a delimiter character.
AA (range 00-FF) represents the 2-character hexadecimal address of the analog input module from which data is to be sent.
4 is the Read Synchronized Data command.
(cr) is the terminating character, carriage return (0Dh).

Response **!AA(status)(data)(cr)** if the command was valid.
?AA(cr) if an invalid operation was entered.
There is no response if the module detects a syntax error or communication error or if the specified address does not exist.
! delimiter character indicates a valid command was received.
AA (range 00-FF) represents the 2-character hexadecimal address of the analog input module that is responding.
(status) will tell you if the data (data) from the last Synchronized Sampling command (#**) has already been sent. If status = 1, then the data has been sent for the first time since a Synchronized Sampling command was issued.
If status = 0, then the data has been sent at least once before.

(data) a value stored in a special register of the interrogated module in the configured data format. It has been sampled by the module after a Synchronized Sampling command. (For possible data formats, see Appendix B, Data Formats and I/O Ranges)
(cr) represents terminating character, carriage return (0Dh).

Example

command: $074(cr)
response: >071+5.8222(cr)
The command asks the analog input module at address 07h to send its analog input data.
The analog input module responds with status = 1, which means that this is the first time that the data has been sent and that the data = +5.8222 Volts.
(Configured data format of the analog input module in this case is engineering units.)

command: $074(cr)
response: >070+5.8222(cr)
The command asks the analog input module at address 07h to send its analog input data.
The analog input module responds with status = 0, which means that it has sent the same data at least once before, and data = +5.8222 Volts. This could indicate that a previous Synchronized Sampling command was not received!
(Configured data format of the analog input module in this case is engineering units.)

4011D, 4015, 4015T, 4018+, 4019+

5.1.13 $AAB

Name Channel Diagnose command

Description Diagnose channel status in over range, under range, and wire opening.

Syntax **$AAB(cr)**

$ is a delimiter character.

AA (range 00-FF) represents the 2-character hexadecimal address of the analog input module to be detected.

B is the Channel Diagnose command.

(cr) is the terminating character, carriage return (0Dh).

Response **ADAM-4011D:**

!AA0(cr) if the module detects a close thermocouple.

!AA1(cr) if the module detects an open thermocouple.

?AA(cr) if an invalid command was issued.

ADAM-4015/4015T/4018+/4019+:

!AANN(cr) if the command is valid when it applied with.

?AA(cr) if an invalid command was issued.

There is no response if the module detects a syntax error or communication error of if the specified address does not exist.

! delimiter character indicates a valid command was received.

? delimiter character indicates the command was invalid.

AA (range 00-FF) represents the 2-character hexadecimal address of the analog input module.

NN (range 00-FF) is a hexadecimal number that equals the 8-bit parameter, representing the status of analog input channels. Bit value 0 means normal status; and bit value 1 means channel over range, under range, or open wiring.

(cr) is the terminating character, carriage return (0Dh)

4011, 4011D, 4018, 4018+, 4018M, 4019+

5.1.14 $AA3

Name CJC Status command

Description Instructs the addressed analog input module to read its CJC (Cold Junction Compensation) sensors and return the acquired data.

Syntax **$AA3(cr)**

$ is a delimiter character.

AA (range 00-FF) represents the 2-character hexadecimal address of the analog input module which contains the CJC Status you wish to retrieve.

3 is the CJC Status command.

(cr) is the terminating character, carriage return (0Dh).

Response **>data(cr)** if the command is valid.

?AA(cr) if an invalid command was issued.

There is no response if the module detects a syntax error or communication error or if the specified address does not exist.

! delimiter character indicates a valid command was received.

? delimiter character indicates the command was invalid

AA (range 00-FF) represents the 2-character hexadecimal address of an analog input module.

(data) is the value that is retrieved by the module by reading its CJC sensor. The data format, in degrees Celsius, consists an “+” or “-” sign followed by five decimal digits and a fixed decimal point. The resolution of the data is 0.1 ° C.

(cr) is the terminating character, carriage return (0Dh).

Example command: $093(cr)

response: >+0036.8(cr)

The command requests the analog input module at address 09h to read its CJC sensor and return the data. The analog input module at address 09h responds with: 36.8 °C.

4011, 4011D, 4018, 4018+, 4018M, 4019+

5.1.15 $AA9SNNNN

Name	CJC Offset Calibration command
Description	Calibrates an analog input module to adjust for offset errors of its CJC (Cold Junction Compensation) sensors.
Syntax	**$AA9SNNNN**(number of counts)(cr) **$** is a delimiter character. **AA** (range 00-FF) represents the 2-character hexadecimal address of the analog input module which contains the CJC status you wish to retrieve. **9** is the CJC Status command. S sign, + or -, indicates whether to increase or decrease the CJC offset value. **NNNN** (number of counts) is a four character hexadecimal "count" value. Each count equals approximately 0.009 ?. The value can range from 0000 to FFFF. **(cr)** is the terminating character, carriage return (0Dh).
Response	**!AA(cr)** if the command is valid. **?AA(cr)** if an invalid command was issued. There is no response if the module detects a syntax error or communication error or if the specified address does not exist. **!** delimiter character indicates a valid command was received. **?** delimiter character indicates the command was invalid. **AA** (range 00-FF) represents the 2-character hexadecimal address of an analog input module. **(cr)** is the terminating character, carriage return (0Dh).
Example	command: $079+0042(cr) response: !07(cr) The command increases the CJC offset value of the analog input module at address 07h with 66 counts (42 hex) which equals about 0.6 °C.

Caution! *An analog input module requires a maximum of 2 seconds to perform auto calibration and ranging after it received a CJC Calibration command. During this interval, the module can not be addressed to perform any other actions.*

4015, 4015T, 4017+, 4018+, 4019+

5.1.16 $AA0Ci

Name Single Channel Span Calibration command

Description The command calibrates a specified channel to correct for gain errors.

Syntax **$AA0Ci(cr)**

$ is a delimiter character.

AA (range 00-FF) represents the 2-character hexadecimal address of the analog input module which is to be calibrated.

0 is the Single Channel Span Calibration command.

Ci represents the specified input channel you want to calibrate.

(cr) is the terminating character, carriage return (0Dh).

Response **!AA(cr)** if the command was valid.

?AA(cr) if an invalid operation was entered.

There is no response if the module detects a syntax error or communication error or if the specified address does not exist.

! delimiter character indicates a valid command was received.

? delimiter character indicates the command was invalid.

AA (range 00-FF) represents the 2-character hexadecimal address of the analog input module.

(cr) represents terminating character, carriage return (0Dh).

In order to successfully calibrate an analog input module's input range, a proper calibration input signal should be connected to the analog input module before and during the calibration. (See also Chapter 8, Calibration)

Caution! *An analog input module requires a maximum of 7 seconds to perform auto calibration and ranging after it received a Span Calibration command. During this interval, the module can not be addressed to perform any other actions.*

4015, 4015T, 4017+, 4018+, 4019+

5.1.17 $AA1Ci

Name Single Channel Offset Calibration command

Description The command calibrates a specified channel to correct for offset errors.

Syntax **$AA1Ci(cr)**

$ is a delimiter character.

AA (range 00-FF) represents the 2-character hexadecimal address of the analog input module which is to be calibrated.

1 is the Single Channel Offset Calibration command.

Ci represents the specified input channel you want to calibrate.

(cr) is the terminating character, carriage return (0Dh).

Response **!AA(cr)** if the command was valid.

?AA(cr) if an invalid operation was entered.

There is no response if the module detects a syntax error or communication error or if the specified address does not exist.

! delimiter character indicates a valid command was received.

? delimiter character indicates the command was invalid.

AA (range 00-FF) represents the 2-character hexadecimal address of the analog input module.

(cr) represents terminating character, carriage return (0Dh).

Example command: $021C5(cr)

response: !02(cr)

The command calibrates channel 5 of the analog input module at address 02 for correcting offset errors.

4015, 4015T, 4017+, 4018+, 4019+

5.1.18 $AA7CiRrr

Name Single Channel Range Configuration command

Description This command configures the input type and range of the specified channel in an analog input module.

Syntax **$AA7CiRrr(cr)**

$ is a delimiter character.

AA (range 00-FF) represents the 2-character hexadecimal address of the analog input module which is to be configured.

7 is the Single Channel Range Configuration command.

Ci represents the specified input channel you want to configure.

Rrr represents the type and range you want to set. (Refer to Table 5.1 on Page 5-6 to check range codes)

(cr) is the terminating character, carriage return (0Dh).

Response **!AA(cr)** if the command was valid.

?AA(cr) if an invalid operation was entered.

There is no response if the module detects a syntax error or communication error or if the specified address does not exist.

! delimiter character indicates a valid command was received.

? delimiter character indicates the command was invalid.

AA (range 00-FF) represents the 2-character hexadecimal address of the analog input module.

(cr) represents terminating character, carriage return (0Dh).

Example command: $027C5R21(cr)

response: !02(cr)

The command configures the range of channel 5 in the analog input module at address 02 as Pt100(IEC) 0 ~ 100 °C

4015, 4015T, 4017+, 4018+, 4019+

5.1.19 $AA8Ci

Name Read Single Channel Range Configuration command

Description This command read the input type and range configuration of the specified channel in an analog input module.

Syntax **$AA8Ci(cr)**

$ is a delimiter character.

AA (range 00-FF) represents the 2-character hexadecimal address of the analog input module which is to be read.

8 is the Read Single Channel Range Configuration command.

Ci represents the specified input channel you want to read.

(cr) is the terminating character, carriage return (0Dh).

Response **!AACiRrr(cr)** if the command was valid.

?AA(cr) if an invalid operation was entered.

There is no response if the module detects a syntax error or communication error or if the specified address does not exist.

! delimiter character indicates a valid command was received.

? delimiter character indicates the command was invalid.

AA (range 00-FF) represents the 2-character hexadecimal address of the analog input module.

Ci represents the specified input channel you read.

Rrr represents the type and range setting in the specified channel. (Refer to Table 5-1 on Page 5-6 to check range codes)

(cr) represents terminating character, carriage return (0Dh).

Example command: $028C5(cr)

response: !02C5R21(cr)

The command read the range of channel 5 in the analog input module at address 02. The response “R21” means Pt100 (IEC) 0 ~ 100 °C.

4015, 4015T, 4017+, 4018+, 4019+

5.1.20 $AAXnnnn

Name Watchdog Timer Setting command

Description This command set the communication watchdog timer (WDT) cycle time.

Syntax **$AAXnnnn(cr)**

$ is a delimiter character.

AA (range 00-FF) represents the 2-character hexadecimal address of the analog input module which is to be read.

X is the Watchdog Timer Setting command.

nnnn (range 0000~9999) represents the specified value of communication cycle you want to set. (Unit: 0.1 second)

(cr) is the terminating character, carriage return (0Dh).

Response **!AA(cr)** if the command was valid.

?AA(cr) if an invalid operation was entered.

There is no response if the module detects a syntax error or communication error or if the specified address does not exist.

! delimiter character indicates a valid command was received.

? delimiter character indicates the command was invalid.

AA (range 00-FF) represents the 2-character hexadecimal address of the analog input module.

(cr) represents terminating character, carriage return (0Dh).

Example command: $02X1234(cr)

response: !02(cr)

The command set the WDT cycle as 1234 in the input module at address 02.

Caution! *If the value of "nnnn" is 0000, the communication WDT function will be disabled.*

4015, 4015T, 4017+, 4018+, 4019+

5.1.21 $AAY

Name Read Communication Watchdog Timer Cycle Setting command

Description This command read the setting of communication watchdog timer (WDT) cycle time.

Syntax **$AAY(cr)**

$ is a delimiter character.

AA (range 00-FF) represents the 2-character hexadecimal address of the analog input module which is to be read.

Y is the Reading Communication WDT Cycle Setting command.

(cr) is the terminating character, carriage return (0Dh).

Response **!AAnnnn(cr)** if the command was valid.

?AA(cr) if an invalid operation was entered.

There is no response if the module detects a syntax error or communication error or if the specified address does not exist.

! delimiter character indicates a valid command was received.

? delimiter character indicates the command was invalid.

AA (range 00-FF) represents the 2-character hexadecimal address of the analog input module.

nnnn (range 0000~9999) represent the specified value of communication cycle you read. (Unit: 0.1 second)

(cr) represents terminating character, carriage return (0Dh).

Example command: $02Y(cr)

response: !020030(cr)

The command read the WDT cycle as 0030 in the input module at address 02.

4015, 4015T

5.1.22 $AAS0

Name Internal Calibration command

Description This command executes internal self-calibration for offset and gain errors.

Syntax **$AAS0(cr)**

$ is a delimiter character.

AA (range 00-FF) represents the 2-character hexadecimal address of the analog input module which is to be calibrated.

S0 is the Internal Calibration command.

(cr) is the terminating character, carriage return (0Dh).

Response **!AA(cr)** if the command was valid.

?AA(cr) if an invalid operation was entered.

There is no response if the module detects a syntax error or communication error or if the specified address does not exist.

! delimiter character indicates a valid command was received.

? delimiter character indicates the command was invalid.

AA (range 00-FF) represents the 2-character hexadecimal address of the analog input module.

(cr) represents terminating character, carriage return (0Dh).

4015, 4015T

5.1.23 $AAS1

Name Reload Default Calibrating Parameter command

Description Reload factory default calibrating parameter to overwrite current calibrating parameter.

Syntax **$AAS1(cr)**

$ is a delimiter character.

AA (range 00-FF) represents the 2-character hexadecimal address of the analog input module which is to be reloaded.

S1 is the Reload Calibrating Parameter command.

(cr) is the terminating character, carriage return (0Dh).

Response **!AA(cr)** if the command was valid.

?AA(cr) if an invalid operation was entered.

There is no response if the module detects a syntax error or communication error or if the specified address does not exist.

! delimiter character indicates a valid command was received.

? delimiter character indicates the command was invalid.

AA (range 00-FF) represents the 2-character hexadecimal address of the analog input module.

(cr) represents terminating character, carriage return (0Dh).

5.2 Analog Input Data Logger Command Set

Command Syntax	Command Name	Description	I/O Module
@AACCCSDMTT TT	Set Memory Configuration	Set the channel storage status, standalone mode, data logger mode, storage type and sampling interval for the specified analog input data logger.	4018M
@AAD	Read Memory Configuration	Return the configuration parame-ters for the specified analog input data logger.	4018M
@AASO	Set Memory Operation Mode	Start/stop the recording function of the memory module.	4018M
@AAT	Read Memory Operation Mode	Read the recording status of the memory module.	4018M
@AAL	Event Record Count	Read the number of stored event records in the memory module.	4018M
@AAN	Standard Record Count	Read the number of stored standard records in the memory module.	4018M
@AARNNNN	Read Record Content	Read the contents of the specified record.	4018M
@AAACSDHHHH TEIIII	Set Alarm Limit	Set the high/low alarm settings for the specified channel.	4018M
@AABC	Read Alarm Limit	Read the high/low alarm settings for the specified channel.	4018M

4018M

5.2.1 @AACCCSDMTTTT

Name Set Memory Configuration command

Description Sets the channel storage status, standalone mode, data logger mode storage type and sampling interval for the specified analog input data logger.

Syntax **@AACCCSDMTTTT(cr)**

@ is a delimiter character.

AA (range 00-FF) represents the 2-character hexadecimal address of an analog input data logger.

C is the Set Memory Configuration command.

CC (range 00-FF) represents the data storage status of each channel. The ADAM-4018M has 8 channels, bit 0 representing channel 0, and bit 7 representing channel 7. A mask bit value of ‘1’ enables data storage in the specified channel, while a mask bit value of ‘0’ disables data storage.

Channel 7							Channel 0
Bit 7	Bit 6	Bit 5	Bit 4	Bit 3	Bit 2	Bit 1	Bit 0

S represents the standalone mode. In order for the ADAM-4018M to operate in the field, you must power on the memory module by setting this value to ‘1.’ Otherwise, the data will not be recorded.
D represents the data logging mode. ‘0’ enables Standard Mode, where all eight channels record the normal data according to the sampling interval. ‘1’ enables Event Mode, where all eight channels record the data if its value is over the High Alarm limit or under the Low Alarm limit. ‘2’ enables Mixed Mode, where channels 0 ~ 3 act as the standard logger and the channels 4 ~ 7 act as the event logger.
M represents the storage type. "0" represents writing to the end of memory. "1" represents circular memory mode.
TTTT (range 2-65535) represents the sampling interval in seconds.
(cr) is the terminating character, carriage return (0Dh).

Response **!AA(cr)** if the configuration is successful.
?AA(cr) if the configuration fails.
! and ? are delimiter characters.
AA (range 00-FF) represents the 2-character hexadecimal address of an analog input module.
(cr) represents terminating character, carriage return (0Dh).

Example command: @0DCFF111012C(cr)
response: !0D(cr)
The ADAM-4018M module at address 0D is configured as such:
All eight data storage channels enabled
Standalone mode enabled
Event logger selected
Circular memory mode
Sampling interval 300 seconds
The response indicates the command is successful.

4018M

5.2.2 @AAD

Name Read Memory Configuration command

Description The command requests the configuration data from the analog input data logger at address AA.

Syntax **@AAD (cr)**

@ is a delimiter character.

AA (range 00-FF) represents the 2-character hexadecimal address of an analog input data logger.

D is the Read Memory Configuration command.

(cr) is the terminating character, carriage return (0Dh).

Response **!AACCSDMTTTT(cr)** if the command is valid.

! is a delimiter character indicating a valid command was received.

AA (range 00-FF) represents the 2-character hexadecimal address of an analog input data logger.

CC (range 00-FF) represents the data storage status of each channel. The ADAM-4018M has 8 channels, bit 0 representing channel 0, and bit 7 representing channel 7. A mask bit value of ‘1’ enables data storage in the specified channel, while a mask bit value of ‘0’ disables data storage.

S represents the standalone mode. In order for the ADAM-4018M to operate in the field, you must power on the memory module by setting this value to ‘1.’ Otherwise, the data will not be recorded.

D represents the data logging mode. ‘0’ enables Standard Mode, where all eight channels record the normal data according to the sampling interval. ‘1’ enables Event Mode, where all eight channels record the data if its value is over the High Alarm limit or under the Low Alarm limit. ‘2’ enables Mixed Mode, where channels 0 ~ 3 act as the standard logger and the channels 4 ~ 7 act as the event logger.

M represents the storage type. "0" represents writing to the end of memory. "1" represents circular memory mode.

TTTT (range 2-65535) represents the sampling interval in seconds.

(cr) is the terminating character, carriage return (0Dh).

4018M

5.2.3 @AAD

Name Read Memory Configuration command

Description The command requests the configuration data from the analog input data logger at address AA.

Syntax **@AAD (cr)**

@ is a delimiter character.

AA (range 00-FF) represents the 2-character hexadecimal address of an analog input data logger.

D is the Read Memory Configuration command.

(cr) is the terminating character, carriage return (0Dh).

Response **!AACCSDMTTTT(cr)** if the command is valid.

! is a delimiter character indicating a valid command was received.

AA (range 00-FF) represents the 2-character hexadecimal address of an analog input data logger.

CC (range 00-FF) represents the data storage status of each channel. The ADAM-4018M has 8 channels, bit 0 representing channel 0, and bit 7 representing channel 7. A mask bit value of ‘1’ enables data storage in the specified channel, while a mask bit value of ‘0’ disables data storage.

S represents the standalone mode. In order for the ADAM-4018M to operate in the field, you must power on the memory module by setting this value to ‘1.’ Otherwise, the data will not be recorded.

D represents the data logging mode. ‘0’ enables Standard Mode, where all eight channels record the normal data according to the sampling interval. ‘1’ enables Event Mode, where all eight channels record the data if its value is over the High Alarm limit or under the Low Alarm limit. ‘2’ enables Mixed Mode, where channels 0 ~ 3 act as the standard logger and the channels 4 ~ 7 act as the event logger.

M represents the storage type. "0" represents writing to the end of memory. "1" represents circular memory mode.

TTTT (range 2-65535) represents the sampling interval in seconds.

(cr) is the terminating character, carriage return (0Dh).

4018M

5.2.4 @AASO

Name Set Memory Operation Mode command

Description Sets the operation mode of the analog input data logger at address AA to Start or Stop.

Syntax **@AASO(cr)**

@ is a delimiter character.

AA (range 00-FF) represents the 2-character hexadecimal address of an analog input data logger.

S is the Set Memory Operation Mode command.

O represents the operation mode:

'1': enables the recording of data.

'0': disables the recording of data.

(cr) is the terminating character, carriage return (0Dh).

Response **!AA(cr)** if the command is valid.

?AA(cr) if an invalid parameter was entered. There is no response if the module detects a syntax error or communication error or if the specified address does not exist.

! is a delimiter character indicating a valid command was received.

? is a delimiter character indicating the command was invalid.

AA (range 00-FF) represents the 2-character hexadecimal address of an analog input data logger.

(cr) is the terminating character, carriage return (0Dh).

Example command: @03S1(cr)

response: !03(cr)

The command enables the analog input data logger at address 03 to record data.

The response indicates that the command was received.

4018M

5.2.5 @AAT

Name Read Memory Operation Mode command

Description Request the memory operation status of the analog input data logger at address AA.

Syntax **@AAT (cr)**

@ is a delimiter character.

AA (range 00-FF) represents the 2-character hexadecimal address of an analog input data logger.

T is the Read Memory Operation Mode command.

(cr) is the terminating character, carriage return (0Dh).

Response **!AAO(cr)** if the command is valid.

! is a delimiter character indicating a valid command was received.

AA (range 00-FF) represents the 2-character hexadecimal address of an analog input module.

O represents the operation mode:

'1': enables the recording of data.

'0': disables the recording of data.

(cr) is the terminating character, carriage return (0Dh).

Example command: @F3T(cr)

response: !F31(cr)

The command requests the memory operation status of the analog input data logger at address F3.

The response indicates that data recording is enabled.

4018M

5.2.6 @AAL

Name Event Record Count command

Description Request the number of event records stored in the analog input data logger at address AA.

Syntax **@AAL (cr)**

@ is a delimiter character.

AA (range 00-FF) represents the 2-character hexadecimal address of an analog input data logger.

L is the Event Record Count command.

(cr) is the terminating character, carriage return (0Dh).

Response **!AAHHHH(cr)** if the command is valid.

! is a delimiter character indicating a valid command was received.

AA (range 00-FF) represents the 2-character hexadecimal address of an analog input module.

HHHH represents the 4-character hexadecimal number of event records stored in the analog input data logger at address AA.

(cr) is the terminating character, carriage return (0Dh).

Example command: @F3L(cr)

response: !F30096(cr)

The command requests the number of event records stored in the analog input data logger at address F3.

The module currently has 150 event records.

4018M

5.2.7 @AAN

Name Standard Record Count command

Description Request the number of standard records stored in the analog input data logger at address AA.

Syntax **@AAN (cr)**

@ is a delimiter character

AA (range 00-FF) represents the 2-character hexadecimal address of an analog input data logger.

N is the Standard Record Count command.

(cr) is the terminating character, carriage return (0Dh).

Response **!AAHHHH(cr)** if the command is valid.

! is a delimiter character indicating a valid command was received.

AA (range 00-FF) represents the 2-character hexadecimal address of an analog input module.

HHHH represents the 4-character hexadecimal number of data records stored in the analog input data logger at address AA.

(cr) is the terminating character, carriage return (0Dh).

Example command: @A3N(cr)

response: !A30320(cr)

The command requests the number of data records stored in the analog input data logger at address A3.

The module currently has 800 data records.

4018M

5.2.8 @AARNNNN

Name Read Record Content command

Description Request the content of record NNNN stored in the analog input data logger at address AA.

Syntax **@AARNNNN (cr)**

@ is a delimiter character.

AA (range 00-FF) represents the 2-character hexadecimal address of an analog input data logger.

R identifies the Read Record Content command.

NNNN represents the 4-character hexadecimal number of stored record index. Its value is from 0 to (total record number - 1).

(cr) is the terminating character, carriage return (0Dh).

NOTE:

NNNN is from 0 to 9470 for Standard Mode.

NNNN is from 0 to 4599 for Event Mode.

NNNN is from 0 to 7299 for Mixed Mode. (0-4999 are data records, 5000-7299 are event records)

Response **!AACDHHHH(cr)** if the returned data are data records.

!AACDHHHHTTTTTTTT(cr) if the returned data are event records.

! is a delimiter character indicating a valid command was received.

AA (range 00-FF) represents the 2-character hexadecimal address of an analog input module.

C represents the channel index. Its value is from 0 to 7.

D represents the 4-bit binary number. Bit 0 represents the sign of the number HHHH. ‘0’ means positive. ‘1’ means negative. Bits 1~3 represents the decimal point of the number HHHH.

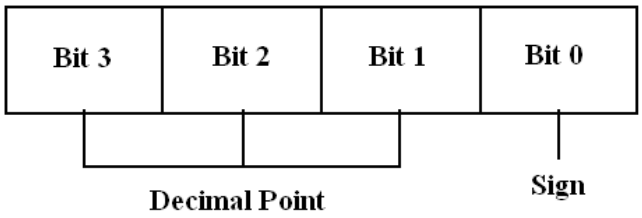

HHHH represents the 4-character hexadecimal number of returned record stored in the analog input data logger at address AA.

TTTTTTTT represents elapsed time.

(cr) is the terminating character, carriage return (0Dh).

Example command: @F3R1000(cr)

response: !F30799AA00001000(cr)

The command requests the analog input data logger at address F3 to return its contents in the 1001st record.

The returned content is valid. The event data number is- 39.338 for channel 0 in the 4096 seconds from the start of the module.

4018M

5.2.9 @AAACSDHHHHTEIIII

Name Set Alarm Limit command

Description Set high/low alarm limits for the channel C in the analog input data logger at address AA.

Syntax **@AAACSDHHHHTEIIII(cr)**

@ is a delimiter character

AA (range 00-FF) represents the 2-character hexadecimal address of an analog input data logger.

A is the Set Alarm Limit command.

C represents the channel index. Its value is from 0 to 7.

S represents the sign of the high alarm limit.

'+' is for positive, and '-' is for negative.

D represents the decimal point of the high alarm limit. Its value is from 0 to 5.

HHHH represents the 4-character hexadecimal number of high alarm limit.

T represents the sign of the low alarm limit.

'+' is for positive, and '-' is for negative.

E represents the decimal point of the low alarm limit. Its value is from 0 to 5.

IIII represents the 4-character hexadecimal number of low alarm limit.

(cr) is the terminating character, carriage return (0Dh).

Response **!AA(cr) i**f the command is valid.

?AA(cr) if an invalid parameter was entered. There is no response if the module detects a syntax error or communication error or if the specified address does not exist.

! is a delimiter character indicating a valid command was received.

? is a delimiter character indicating the command was invalid.

AA (range 00-FF) represents the 2-character hexadecimal address of an analog input data logger.

(cr) is the terminating character, carriage return (0Dh).

Example command: @EFA0+20400+20100(cr)

response: !EF(cr)

The command sets channel 0 of the analog input data logger at address EF as such:

high alarm limit = 10.24

low alarm limit = 2.56

The response indicates the command was received.

4018M

5.2.10 @AABC

Name Read Alarm Limit command

Description Request the alarm limits for the specified channel in the analog input data logger at address AA.

Syntax **@AABC(cr)**

@ is a delimiter character.
AA (range 00-FF) represents the 2-character hexadecimal address of an analog input data logger.
B is the Read Alarm Limit command.
C represents the channel index. Its value is from 0 to 7.
(cr) is the terminating character, carriage return (0Dh).

Response **!AASDHHHHTEIIII**

! is a delimiter character indicating a valid command was received.
AA (range 00-FF) represents the 2-character hexadecimal address of an analog input data logger.
S represents the sign of the high alarm limit.
'+' is for positive, and '-' is for negative.
D represents the decimal point of the high alarm limit. Its value is from 0 to 5.
HHHH represents the 4-character hexadecimal number of high alarm limit.
T represents the sign of the low alarm limit.
'+' is for positive, and '-' is for negative.
E represents the decimal point of the low alarm limit. Its value is from 0 to 5.
IIII represents the 4-character hexadecimal number of low alarm limit.
(cr) is the terminating character, carriage return (0Dh).

5.3 Digital I/O, Alarm and Event Command Set

Command Syntax	Command Name	Description	I/O Module
@AADI	Read Digital I/O and Alarm Status	The addressed module returns the state of its digital input and digital output channels and the status of its alarm	4011, 4011D, 4012, 4016
@AADO(data)	Set Digital Output Values	Set the values of the module's digital outputs (ON or OFF)	4011, 4011D, 4012, 4016
@AAEAT	Enable Alarm	Enables the alarm in either Momentary or Latching mode	4011, 4011D, 4012, 4016
@AAHI(data)	Set High Alarm Value	Downloads the High alarm limit value	4011, 4011D, 4012, 4016
@AALO(data)	Set Low Alarm Value	Downloads the Low alarm limit value	4011, 4011D, 4012, 4016
@AADA	Disable Alarm	Disables all alarm functions	4011, 4011D, 4012, 4016
@AACA	Clear Latch Alarm	Resets the module's Latch alarm to zero	4011, 4011D, 4012, 4016
@AARH	Read High Alarm Value	Ask the addressed module to return its high alarm value	4011, 4011D, 4012, 4016
@AARL	Read Low Alarm Value	Ask the addressed module to return its low alarm value	4011, 4011D, 4012, 4016
@AARE	Read Event Counter	Ask the addressed module to return its event counter value	4011, 4011D, 4012
@AACE	Clear Event Counter	Reset the module's event counter to zero	4011, 4011D, 4012

4011, 4011D, 4012, 4016

5.3.1 @AADI

Name Read Digital I/O and Alarm State

Description The addressed analog input module is instructed to return the value of its digital input and output channels and the state of its alarm (Momentary or Latching).

Syntax **@AADI(cr)**

@ is a delimiter character.

AA (range 00-FF) represents the 2-character hexadecimal address of an analog input module.

DI is the Read Digital I/O and Alarm Status command.

(cr) represents terminating character, carriage return (0Dh).

Response **ADAM-4011/4011D/4012:**

!AASOOII(cr) if the command was valid

ADAM-4016:

!AASOO00(cr) if the command was valid

There is no response if the module detects a syntax error or communication error or if the specified address does not exist.

! delimiter character indicates a valid command was received.

AA represents the 2-character hexadecimal address of the responding analog input module.

S hexadecimal number that represents the alarm state (0h = disabled, 1h = MOMENTARY mode enabled, 2h = LATCH mode enabled).

OO

For ADAM-4011/4011D/4012: it is a hexadecimal number representing the Digital Output port's channel 0 and 1 status (00h = D/O channels 0 and 1 are both OFF, 01h = channel 0 is ON, channel 1 is OFF, 02h = channel 0 is OFF, channel 1 is ON, 03h = channel 0 and 1 are both ON).

For ADAM-4016: it is a hexadecimal number representing the status of the four digital output channels. The corresponding table is show in the following table:

Status Code	DO0	001	002	003
OO	OFF	OFF	OFF	OFF
O1	OFF	OFF	OFF	ON
O2	OFF	OFF	ON	OFF
O3	OFF	OFF	ON	ON
O4	OFF	ON	OFF	OFF
O5	OFF	ON	OFF	ON
O6	OFF	ON	ON	OFF
O7	OFF	ON	ON	ON
O8	ON	OFF	OFF	OFF
O9	ON	OFF	OFF	ON
OA	ON	OFF	ON	OFF
OB	ON	OFF	ON	ON
OC	ON	ON	OFF	OFF
OD	ON	ON	OFF	ON
OE	ON	ON	ON	OFF
OF	ON	ON	ON	ON

II is a hexadecimal number representing the Digital input port's channel status (00h = D/I channel is Low, 01h = channel is High).
(cr) represents terminating character, carriage return (0Dh).

Example

command: @15DI(cr)
response: !510001(cr)
The analog input module at address 15h is instructed to return digital I/O data and alarm status.
The module responds that both digital output channels are OFF, digital input is HIGH, and alarm state is Momentary.

4011, 4011D, 4012, 4016

5.3.2 @AADO

Name Set Digital Output command

Description Sets the values of the module's digital outputs (ON or OFF).

Syntax **@AADO(data)(cr)**

@ is a delimiter character.

AA (range 00-FF) represents the 2-character hexadecimal address of an analog input module.

DO is the Set Digital Output command.

(data) is the two-character parameter that sets the state for the digital output bits of the module, as shown below:

For ADAM-4011/4011D/4012:

00 all D/O bits are OFF
01 DO0 is ON, DO1 is OFF
02 DO0 is OFF, DO1 is ON
03 all bits are ON

For ADAM-4016:

00 DO0 and DO1 are OFF
01 DO0 is ON, DO1 is OFF
02 DO0 is OFF, DO1 is ON
03 DO0 and DO1 are ON
10 DO2 and DO3 are OFF
11 DO2 is ON, DO3 is OFF
12 DO2 is OFF, DO3 is ON
13 DO2 and DO3 are ON

(cr) represents terminating character, carriage return (0Dh).

Response **!AA(cr)** if the command was valid.

?AA(cr) if an invalid parameter was entered.

There is no response if the module detects a syntax error or communication error or if the specified address does not exist

! delimiter character indicates a valid command was received.

? delimiter character indicates the command was invalid.

AA represents the 2-character hexadecimal address of the responding analog input module.

(cr) represents terminating character, carriage return (0Dh).

Example command: @05DO01(cr)

response: !05(cr)

The analog input module at address 05h is instructed to set digital output channel 1 to ON and digital output channel 2 to OFF. The module confirms the settings.

5.3.3 @AAEAT

Name Enable Alarm command

Description The addressed analog input module is instructed to enable its alarm in either Latching or Momentary mode.

Syntax **@AAEAT(cr)**

@ is a delimiter character.

AA (range 00-FF) represents the 2-character hexadecimal address of an analog input module.

EA is the Enable Alarm command.

T indicates alarm type and can have the value M = Momentary alarm state, or L = Latching alarm state.

(cr) represents terminating character, carriage return (0Dh).

Response **!AA(cr)** if the command was valid.

There is no response if the module detects a syntax error or communication error or if the specified address does not exist.

! delimiter character indicates a valid command was received.

AA represents the 2-character hexadecimal address of the responding analog input module.

(cr) represents terminating character, carriage return (0Dh).

Example command: @03EAL(cr)

response: !03(cr)

The analog input module at address 03h is instructed to enable its alarm in Latching mode.

The module confirms that the command has been received.

Caution! *An analog input module requires a maximum of 2 seconds after it received an Enable Alarm command to let the settings take effect . During this interval, the module can not be addressed to perform any other actions.*

4011, 4011D, 4012, 4016

5.3.4 @AAHI

Name Set High Alarm Limit command

Description Downloads high alarm limit value into the addressed module.

Syntax **@AAHI(data)(cr)**

@ is a delimiter character.

AA (range 00-FF) represents the 2-character hexadecimal address of an analog input module.

HI is the Set High Limit command.

(data) represents the value of the desired high limit setting. The format is always engineering units.

(cr) represents terminating character, carriage return (0Dh).

Response **!AA(cr)** if the command was valid.

There is no response if the module detects a syntax error or communication error or if the specified address does not exist.

! delimiter character indicates a valid command was received.

AA represents the 2-character hexadecimal address of the responding analog input module.

(cr) represents terminating character, carriage return (0Dh).

Example command: @04HI+080.00(cr)

response: !04(cr)

Presume the analog input module at address 04h is configured to accept T-type thermocouple input. The command will set the High alarm limit to 80?.

The module responds that the command has been received.

Caution! *An analog input module requires a maximum of 2 seconds after it received an Set High Alarm command to let the settings take effect . During this interval, the module can not be addressed to perform any other actions.*

5.3.5 @AALO

Name Set Low Alarm Limit command

Description Downloads Low alarm limit value into the addressed module.

Syntax **@AALO(data)(cr)**

@ is a delimiter character.

AA (range 00-FF) represents the 2-character hexadecimal address of an analog input module.

LO is the Set Low Limit command.

(data) represents the value of the desired low limit setting. The format is always engineering units.

(cr) represents terminating character, carriage return (0Dh).

Response **!AA(cr)** if the command was valid.

There is no response if the module detects a syntax error or communication error or if the specified address does not exist.

! delimiter character indicates a valid command was received.

AA represents the 2-character hexadecimal address of the responding analog input module.

(cr) represents terminating character, carriage return (0Dh).

Example command: @04LO-020.00(cr)

response: !04(cr)

Presume the analog input module at address 04h is configured to accept T-type thermocouple input. The command will set the Low alarm limit to -20 °C.

The module responds that the command has been received.

Caution! *An analog input module requires a maximum of 2 seconds after it received an Set Low Alarm command to let the settings take effect. During this interval, the module can not be addressed to perform any other actions.*

4011, 4011D, 4012, 4016

5.3.6 @AADA

Name Disable Alarm command

Description Disables all alarm functions of the addressed analog input module.

Syntax **@AADA(cr)**

@ is a delimiter character.

AA (range 00-FF) represents the 2-character hexadecimal address of an analog input module.

DA is the Disable Alarm command.

(cr) represents terminating character, carriage return (0Dh).

Response **!AA(cr)** if the command was valid.

There is no response if the module detects a syntax error or communication error or if the specified address does not exist.

! delimiter character indicates a valid command was received.

AA represents the 2-character hexadecimal address of the responding analog input module.

(cr) represents terminating character, carriage return (0Dh).

Example command: @07DA (cr)

response: !07(cr)

The analog input module at address 07h is instructed to disable all alarm functions.

The module confirms it alarm functions have been disabled.

Caution! *An analog input module requires a maximum of 2 seconds after it received an Disable Alarm command to let the settings take effect. During this interval, the module can not be addressed to perform any other actions.*

4011, 4011D, 4012, 4016

5.3.7 @AACA

Name Clear Latch Alarm command

Description Both alarm states (High and Low) of the addressed analog input module are set to OFF, no alarm.

Syntax **@AACA(cr)**

@ is a delimiter character.

AA (range 00-FF) represents the 2-character hexadecimal address of an analog input module.

CA is the Clear Latch Alarm command.

(cr) represents terminating character, carriage return (0Dh).

Response **!AA(cr)** if the command was valid.

There is no response if the module detects a syntax error or communication error or if the specified address does not exist.

! delimiter character indicates a valid command was received.

AA represents the 2-character hexadecimal address of the responding analog input module.

(cr) represents terminating character, carriage return (0Dh).

Example command: @05CA(cr)

response: !05(cr)

The analog input module at address 05h is instructed to set both alarm states (High and Low) to OFF.

The module confirms it has done so accordingly.

4011, 4011D, 4012, 4016

5.3.8 @AARH

Name Read High Alarm Limit command

Description The addressed module is asked to return its High alarm limit value.

Syntax **@AARH(cr)**

@ is a delimiter character.

AA (range 00-FF) represents the 2-character hexadecimal address of an analog input module.

RH is the Read High Alarm Limit command.

(cr) represents terminating character, carriage return (0Dh).

Response **!AA(data)(cr)** if the command was valid.

There is no response if the module detects a syntax error or communication error or if the specified address does not exist.

! delimiter character indicates a valid command was received.

AA represents the 2-character hexadecimal address of the responding analog input module.

(data) is the value of the High alarm limit in engineering units.

(cr) represents terminating character, carriage return (0Dh).

Example command: @07RH(cr)

response: !07+2.0500(cr)

Presume the analog input module at address 07h is configured to accept 5 V input. The command instructs the module to return it High alarm limit value. The module responds its High alarm limit value is 2.0500 V.

4011, 4011D, 4012, 4016

5.3.9 @AARL

Name Read Low Alarm Limit command

Description The addressed module is asked to return its Low alarm limit value.

Syntax **@AARL(cr)**

@ is a delimiter character.

AA (range 00-FF) represents the 2-character hexadecimal address of an analog input module.

RL is the Read Low Alarm Limit command.

(cr) represents terminating character, carriage return (0Dh).

Response **!AA(data)(cr)** if the command was valid.

There is no response if the module detects a syntax error or communication error or if the specified address does not exist.

! delimiter character indicates a valid command was received.

AA represents the 2-character hexadecimal address of the responding analog input module.

(data) is the value of the Low alarm limit in engineering units.

(cr) represents terminating character, carriage return (0Dh).

Example command: @05RL(cr)

response: !05-0.3750(cr)

Presume the analog input module at address 05h is configured to accept 1 V input. The command instructs the module to return it Low alarm limit value. The module responds its Low alarm limit value is -0.3750 V.

4011, 4011D, 4012

5.3.10 @AARE

Name Read Event Counter command

Description The addressed module is instructed to return its event counter value.

Syntax **@AARE(cr)**

@ is a delimiter character.

AA (range 00-FF) represents the 2-character hexadecimal address of an analog input module.

RE is the Reads Event Counter command.

(cr) represents terminating character, carriage return (0Dh).

Response **!AA(data)(cr)** if the command was valid.

There is no response if the module detects a syntax error or communication error or if the specified address does not exist.

! delimiter character indicates a valid command was received.

AA represents the 2-character hexadecimal address of the responding analog input module.

(data) represents the stored value, from '00000' to '65535' (The max value that can be held by the counter register is 65535). The number 65535 is held when the actual total counts exceed this number.

(cr) represents terminating character, carriage return (0Dh).

Example command: @08RE(cr)

response: !0832011(cr)

The command instructs the module at address 08h to return its counter value. The module responds that its counter value equals 32011.

4011, 4011D, 4012

5.3.11 @AACE

Name Clear Event Counter command

Description The addressed module is instructed to reset its event counter to zero.

Syntax **@AACE(cr)**

@ is a delimiter character.

AA (range 00-FF) represents the 2-character hexadecimal address of an analog input module.

CE is the Clear Event Counter command.

(cr) represents terminating character, carriage return (0Dh).

Response **!AA(cr)** if the command was valid.

There is no response if the module detects a syntax error or communication error or if the specified address does not exist.

! delimiter character indicates a valid command was received.

AA represents the 2-character hexadecimal address of the responding analog input module.

(cr) represents terminating character, carriage return (0Dh).

Example command: @09CE(cr)

response: !09(cr)

The command instructs the module at address 09h to set its event counter to zero. The module responds that its counter has been reset.

5.4 Excitation Voltage Output Command Set

Command Syntax	Command Name	Description	I/O module
$AA6	Get Excitation Voltage Output Value	Returns either last value sent to specified module by $AA7 command, or start-up output voltage.	4016
$AA7	Excitation Voltage Output	Direct output excitation voltage data to a specified module	4016
$AAS	Start-up Voltage Output Configuration	Stores a default value in a specified module. The output value will take effect upon startup.	4016
$AAE	Trim Calibration	Trims specified module a number of units up/down	4016
$AAA	Zero Calibration	Tells the module to store parameters for zero calibration	4016
$AAB	Span Calibration	Tells the module to store parameters for span calibration	4016

4016

5.4.1 $AA6

Name Get Excitation Voltage Output Value command

Description The addressed strain gauge input module is instructed to return the latest output value it received from Excitation Voltage Output command. If the module hasn't received an Excitation Voltage Output command since startup, it will return its Start-up Output value.

Syntax **$AA6(cr)**
$ is a delimiter character.
AA (range 00-FF) represents the 2-character hexadecimal address of the strain gauge input module.
6 is the Get Excitation Voltage Output command.
(cr) is the terminating character, carriage return (0Dh)

Response **!AA(data)(cr)** if the command is valid.
?AA(cr) if an invalid command was issued.
There is no response if the module detects a syntax error or communication error or if the specified address does not exist.
! delimiter character indicates a valid command was received.
? delimiter character indicates the command was invalid.
AA (range 00-FF) represents the 2-character hexadecimal address of the strain gauge input module.
(data) is the value that is returned by analog output channel. The format of the data is in engineering unit.
(cr) is the terminating character, carriage return (0Dh)

Example command: $0A6(cr)
response: !0A+03.000(cr)
The command tells the strain gauge input module at address 0Ah to return the last excitation voltage output value it received from an Excitation Voltage Output command. The strain gauge input module returns the value +03.000V.

4016

5.4.2 $AA7

Name Excitation Voltage Output command

Description Send a value to the analog output channel of the addressed strain gauge input module. Upon receipt, the analog output channel will output this value.

Syntax **$AA7(data)(cr)**

$ is a delimiter character.

AA (range 00-FF) represents the 2-character hexadecimal address of the strain gauge input module.

7 is the Excitation Voltage Output command.

(data) is the value that has to be output through the analog output channel. The data format is engineering unit and the range is between 0 ~ 10 V.

(cr) is the terminating character, carriage return (0Dh)

Response **!AA(cr)** if the command is valid.

?AA(cr) if a value was sent that is out of range.

There is no response if the module detects a syntax error or communication error or if the specified address does not exist.

! delimiter character indicates a valid command was received.

? delimiter character indicates the command was invalid.

AA (range 00-FF) represents the 2-character hexadecimal address of the strain gauge input module.

(cr) is the terminating character, carriage return (0Dh)

Example command: $337+05.000(cr)

response: !33(cr)

The command sends the value +05.000V to the analog output channel of the strain gauge input module at address 33h. The module responds that the command is valid. Its output data format is in engineering unit, the value is +05.000V.

4016

5.4.3 $AAS

Name Start-up Voltage Output Configuration command

Description Stores the present analog output value of the strain gauge input module with address AA in the module's non-volatile register. The output value will take effect upon start-up or after a brownout.

Syntax **$AAS(cr)**

$ is a delimiter character.

AA (range 00-FF) represents the 2-character hexadecimal address of the strain gauge input module whose analog output is to be set.

S is the Start-up Voltage Output Configuration command.

(cr) is the terminating character, carriage return (0Dh).

Response **!AA(cr)** if the command is valid.

?AA(cr) if an invalid command was issued.

There is no response if the module detects a syntax error or communication error or if the specified address does not exist.

! delimiter character indicates a valid command was received.

? delimiter character indicates the command was invalid.

AA (range 00-FF) represents the 2-character hexadecimal address of the strain gauge input module.

(cr) is the terminating character, carriage return (0Dh).

Note! *A strain gauge input module requires a maximum of 6 milliseconds after it received a Startup Voltage Output Configuration command to let the settings take effect. During this interval, the module can not be addressed to perform any other actions.*

Example command: $0AS(cr)

response: !0A(cr)

Presume the present output value of the output channel of the strain gauge input module with address 0A is +05.000V. The command tells the module store the present output value, in its non-volatile memory. When the module is powered up or reset, its default output value will be +05.000V. The response of the strain gauge input module indicates that the command has been received.

4016

5.4.4 $AAE

Name	Trim Calibration command
Description	Trims the output voltage of the strain gauge input module a specified number of units up or down.
Syntax	**$AAE**(number of counts)(cr) **$** is a delimiter character. **AA** (range 00-FF) represents the 2-character hexadecimal address of the strain gauge input module to be calibrated. **E** is the Trim Calibration command. (number of counts) is the 2-character two's complement hexadecimal value that represents the number of counts by which to increase or decrease the output voltage. Each count equals approximately 1mV. Values range from 00 to **7F** and from 80 to FF, where 00 represents 0 counts, 7F represents 127 counts, 80 represents -128 counts and FF represents -1 counts. Negative values decrease and positive values increase the output voltage according to the number of counts. **(cr)** is the terminating character, carriage return (0Dh).
Response	**!AA(cr)** if the command is valid. There is no response if the module detects a syntax error or communication error or if the specified address does not exist. **!** delimiter character indicates a valid command was received. **AA** (range 00-FF) represents the 2-character hexadecimal address of the strain gauge input module. **(cr)** is the terminating character, carriage return (0Dh).
Example	command: $07E14(cr) response: !07 The command tells the analog output of the strain gauge input module at address 07h to increase its output value by 20 (14h) counts which is approximately 20 mV. The strain gauge input module confirms the increase. In order to perform this trim calibration, a voltmeter should be connected to the module's output. (See also the zero calibration command and span calibration command of the strain gauge input module and Chapter 8, Calibration, for a detailed description.)

4016

5.4.5 $AAA

Name Zero Calibration command

Description Stores the voltage output value of the addressed strain gauge input module as zero voltage reference.

Syntax **$AAA(cr)**

$ is a delimiter character.

AA (range 00-FF) represents the 2-character hexadecimal address of the strain gauge input module whose output channel is to be calibrated.

A is the Zero Calibration command.

(cr) is the terminating character, carriage return (0Dh)

Response **!AA(cr)** if the command is valid.

?AA(cr) if an invalid command was issued.

There is no response if the module detects a syntax error or communication error or if the specified address does not exist.

! delimiter character indicates a valid command was received.

? delimiter character indicates the command was invalid.

AA (range 00-FF) represents the 2-character hexadecimal address of the strain gauge input module.

(cr) is the terminating character, carriage return (0Dh).

Before issuing the Zero Calibration command, the analog output should be trimmed to the correct value with the Trim Calibration command. A voltmeter should be connected to the module's output channel. (See also the strain gauge input module's Trim Calibration command and Chapter 8, Calibration, for a detailed description.)

4016

5.4.6 $AAB

Name Span Calibration command

Description Stores the voltage output value of the addressed strain gauge input module as 10V reference.

Syntax **$AAB(cr)**

$ is a delimiter character.

AA (range 00-FF) represents the 2-character hexadecimal address of the strain gauge input module whose output channel is to be calibrated.

B is the Span Calibration command.

(cr) is the terminating character, carriage return (0Dh).

Response **!AA(cr)** if the command is valid.

?AA(cr) if an invalid command was issued.

There is no response if the module detects a syntax error or communication error or if the specified address does not exist.

! delimiter character indicates a valid command was received.

? delimiter character indicates the command was invalid.

AA (range 00-FF) represents the 2-character hexadecimal address of the strain gauge input module.

(cr) is the terminating character, carriage return (0Dh).

Before issuing the Span Calibration command, the analog output should be trimmed to the correct value with the Trim Calibration command. A voltmeter should be connected to the module's output channel. (See also the strain gauge input module's Trim Calibration command and Chapter 8, Calibration, for a detailed description.)

Chapter 6

Analog Output Module Command Set

6.1 Analog Output Module Command for ADAM-4021

Command Syntax	Command Name	Description	I/O Module
%AANNTTCCFF	Configuration	Sets the address, output range, baud rate, data format, slew rate and/or checksum status	4021
#AA(data)	Analog Data Out	Directs output data to a specified module	4021
$AA4	Start-Up Output Current or Voltage Configuration	Stores a default output value in a specified module. The output value will take effect upon startup	4021
$AA3 (number of counts)	Trim Calibration	Trims specified module a number of units up/down	4021
$AA0	4 mA Calibration	Tells the module to store parameters for 4mA Calibration	4021
$AA1	20 mA Calibration	Tells the module to store parameters for 20 mA Calibration	4021
$AA2	Configuration Status	Reads the configuration of specified module	4021
$AA6	Last Value Readback	Returns either last value sent to specified module by #AA command, or start-up output current/voltage	4021
$AA8	Current Readback	Returns measured value of the current/voltage flowing through current loop	4021
$AA5	Reset Status	Checks if module has been reset since the last $AA5 command	4021
$AAF	Read Firmware Version	Returns the firmware version code from the specified analog output module	4021
$AAM	Read Model Name	Return the module name from specified analog output module	4021

4021

6.1.1 %AANNTTCCFF

Name Configuration command

Description Sets address, input range, baud rate, data format, checksum status, and/or integration time for an analog output module.

Syntax **%AANNTTCCFF(cr)**

% is a delimiter character.

AA (range 00-FF) represents the 2-character hexadecimal address that is to be configured.

NN represents the new hexadecimal address of the analog output module. Range is from 00h to FFh.

TT represents the type codes (output range codes).

(See Table 6-2 on next page)

CC represents the baud rate codes.

(See Table 6-1 on next page)

FF is a hexadecimal number that equals to 8-bit parameter representing the status of data format, slew rate, and checksum. The layout of the 8-bit parameter is shown in Figure 6.1. Bit 7 is not used and must be set to 0.

(cr) is the terminating character, carriage return (0Dh).

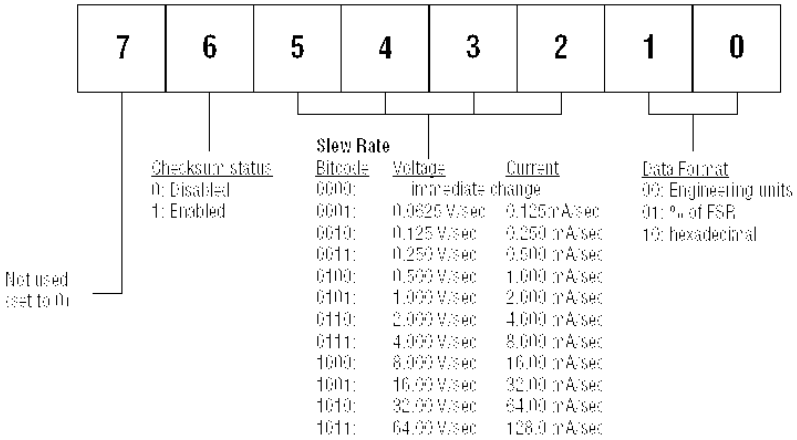

Figure 6.1 Data format for FF (8-bit parameter)

Note! *Only ADAM-4021 supports "% of FSR" and "two's complement of hexa decimal" Data Format.*

Response **!AA(cr)** if the command is valid.
?AA(cr) if an invalid parameter was entered or the INIT* terminal was not grounded when changing baud rate or checksum settings was attempted.
There is no response if the module detects a syntax or communication error, or even if the specified address does not exist.
! delimiter character indicates that a valid command is received.
? delimiter character indicates that the command is invalid.
AA (range 00-FF) represents the 2-character hexadecimal address of an analog output module.
(cr) is the terminating character, carriage return (0Dh).

Table 6.1: Baud Rate Codes

Baud Rate Code (Hex)	Baud Rate
03	1200 bps
04	2400 bps
05	4800 bps
06	9600 bps
07	19.2 Kbps
08	38.4 Kbps

Table 6.2: Output Range Codes (Type Codes)

Output Range Code (Hex)	Output Range for ADAM-4021
30	0 to 20 mA
31	4 to 20 mA
32	0 to 10 V

Caution! *An analog output module requires a maximum of 20 milliseconds to perform auto calibration and ranging after it is reconfigured. During this time span, the module can not be addressed to perform any other actions.*

Caution! *All configuration parameters can be changed dynamically, except the checksum and baud rate parameters. They can only be altered when the INIT* terminal is grounded. (Refer to Baud rate and Checksum in Chapter 2).*

Example command: %310A310610(cr)
response: !24(cr)
The analog input module is configured from addresses 31h to a new address 0Ah, output range 4 to 20 mA, baud rate 9600, engineering units data format, a slew rate of 1.0 mA/sec and no checksum checking.
The response indicates that the command has been received.

4021

6.1.2 #AA

Name Analog Data Out command

Description Send a value to the address of analog output module. Then, the analog output module will output this value.

Syntax **#AA(data)(cr)**

is a delimiter character.

AA (range 00-FF) represents the 2-character hexadecimal address of an analog output module.

(data) is the value that has to be outputted through the analog output module. The Range and value depend on the module's configured data format. The possible formats are engineering units or % of FSR or hexadecimal. (Please refer to Appendix B, Data Formats and I/O Ranges.)

(cr) is the terminating character, carriage return (0Dh).

Response **>(cr)** if the command was valid.

?AA(cr) if the sent value was out of range. Note that when the analog output module receives such a value, it will try to use a value which is close to the one received and within the module's configured range.

There is no response if the module detects a syntax or communication error, or even if the specified address does not exist.

> is a delimiter character.

? delimiter character indicates that the command is invalid.

AA (range 00-FF) represents the 2-character hexadecimal address of an analog output module.

(cr) is the terminating character, carriage return (0Dh).

Example command: #3315.000(cr)

response: >(cr)

The command sends the value 15 mA, which is converted to engineering units, to the address 33h of the analog output module. The analog output module responds with an output value of 15 mA which represents a valid command.

command: #0A+030.00(cr)

response: >(cr)

The module is configured for an output range of 4 to 20 mA and a percent of span data format. The command sends the value 8.8 mA (4 mA + 0.30 x 16 mA = 8.8 mA) which is 30% of the span to the address 0Ah of analog output module. The analog output module responds with an output value of 8.8 mA which represents a valid command.

command: #1B7FF(cr)

response: >(cr)

The command sends the hexadecimal value 7FF to the analog output module at address 1Bh. The module is configured to a 0 to 20 mA output range and a hexadecimal data format. It will output with a value of 10 mA ((7FFH/FFFH) x 20 mA = 10 mA).

4021

6.1.3 $AA4

Name Start-up Voltage/Current Output Configuration command

Description Stores the present output value of an analog output module at address AA in the module's non-volatile register. The output value will take effect at start-up or after a brownout.

Syntax **$AA4(cr)**

$ is a delimiter character.

AA (range 00-FF) represents the 2-character hexadecimal address of the analog output module whose output current is to be set.

4 is the Start-up Output Current Configuration command.

(cr) is the terminating character, carriage return (0Dh).

Response **!AA(cr)** if the command is valid.

?AA(cr) if an invalid command was issued.

There is no response if the module detects a syntax or communication error, or even if the specified address does not exist.

! delimiter character indicates that a valid command was received.

? delimiter character indicates that the command was invalid.

AA (range 00-FF) represents the 2-character hexadecimal address of the analog output module.

(cr) is the terminating character, carriage return (0Dh).

Example command: $0A4(cr)

response: !0A(cr)

Presume the present output value of the analog output module at address 0A is 9.4 mA. The command tells the analog output module to store the present output value into non-volatile memory. When the module is at start-up or reset, its default output value will be 9.4mA. The response of the analog output module indicates that the command has been received.

Caution! *An analog output module requires a maximum of 6 milli-seconds after it received a Startup Voltage/Current Output Configuration command to let the settings take effect . During this interval, the module can not be addressed to perform any other actions.*

4021

6.1.4 $AA3

Name Trim Calibration command

Description Trim the address of analog output module for a specific number of units up or down.

Syntax **$AA3**(number of counts)(cr)

$ is a delimiter character.

AA (range 00-FF) represents the 2-character hexadecimal address which is to be calibrated.

3 is the Trim Calibration Command.

(number of counts) is the 2-character two's complement hexadecimal value that represents the number of counts increasing or decreasing the output current. Each count equals to approximately 1.5 ?A. Values range from 00 to 5F and A1 to FF (hexadecimal). The 00 represents 0 counts, 5F represents +95 counts, A1 represents -95 counts and FF represents -1 count. Negative values decrease the output current according to the number of counts. On the other hand, the positive values do the opposite.

(cr) is the terminating character, carriage return (0Dh).

Response **!AA(cr)** if the command is valid.

There is no response if the module detects a syntax or communication error, or even if the specified address does not exist.

! delimiter character indicates that a valid command was received

AA (range 00-FF) represents the 2-character hexadecimal address of the analog output module.

(cr) is the terminating character, carriage return (0Dh).

Example command: $07314(cr)

response: !07(cr)

The command tells the analog output module at address 07h to increase its output value by 20 (14h) counts which are approximately 30 μA.

The analog output module confirms the increase.

In order to perform this trim calibration, a millimeter or a resistor and voltmeter should be connected to the module's output. (Please see the 4 mA Calibration command and 20 mA Calibration command of the analog output module's command set. Please also refer to Chapter 8, Calibration for a detailed description.)

4021

6.1.5 $AA0

Name 4 mA Calibration command

Description Stores the current output value 4 mA for reference in the specified address in analog output module.

Syntax **$AA0(cr)**

$ is a delimiter character.

AA (range 00-FF) represents the 2-character hexadecimal address whose data are to be sent.

0 is the 4 mA Calibration command.

(cr) is the terminating character, carriage return (0Dh).

Response **!AA(cr)** if the command was valid.

?AA(cr) if an invalid command was issued.

There is no response if the module detects a syntax or communication error, or even if the specified address does not exist.

! delimiter character indicates that a valid command was received.

? delimiter character indicates that the command was invalid.

AA (range 00-FF) represents the responding 2-character hexadecimal address of the analog output module.

(cr) is the terminating character, carriage return (0Dh).

Before issuing the 4 mA Calibration command, the analog output module should be trimmed to the correct value with the Trim Calibration command. A millimeter or a resistor and voltmeter should be connected to the module's output. (Please refer to the analog output module's Trim Calibration command and Chapter 8, Calibration, for a detailed description.)

4021

6.1.6 $AA2

Name Read Configuration Status command

Description Instruct the analog output module to return its configuration data.

Syntax **$AA2(cr)**

$ is a delimiter character.

AA (range 00-FF) represents the 2-character hexadecimal address for status reading.

2 is the Read Configuration Status command.

(cr) is the terminating character, carriage return (0Dh).

Response **!AATTCCFF(cr)** if the command is valid.

?AA(cr) if an invalid command was issued.

There is no response if the module detects a syntax or communication error, or even if the specified address does not exist.

! delimiter character indicates that a valid command was received.

? delimiter character indicates that the command was invalid.

AA (range 00-FF) represents the 2-character hexadecimal address of an analog output module.

TT represents the type of code, which determines the output range.

CC represents the baud rate code.

FF is a hexadecimal number that equals to 8-bit parameter representing the data format, slew rate, and checksum status.

(cr) is the terminating character, carriage return (0Dh)

Please refer to %AANNTTCCFF Configuration command (Page 6-3 and 6-4) for TT, CC and FF parameter definition.

Example command: $452(cr)

response: !45300614(cr)

The command asks the analog output module at address 45h to send its configuration data.

The analog output module at address 45h responds with output range 0 to 20 mA, baud rate 9600, engineering units as the currently configured data format, slew rate 2 mA per second, and no checksum checking.

4021

6.1.7 $AA6

Name Last Value Readback command

Description The analog output module is instructed to return the latest output value that it has received from the Analog Data Out command. If the module hasn't received any Analog Data Out commands since startup, it will return to its Start-up Output value.

Syntax **$AA6(cr)**
$ is a delimiter character.
AA (range 00-FF) represents the 2-character hexadecimal address whose value you want to return.
6 is the Last Value Readback command.
(cr) is the terminating character, carriage return (0Dh).

Response **!AA(data)(cr)** if the command was valid.
?AA(cr) if an invalid command was issued.
There is no response if the module detects a syntax or communication error, or even if the specified address does not exist.
! delimiter character indicates that a valid command was received.
? delimiter character indicates that the command was invalid.
AA (range 00-FF) represents the 2-character hexadecimal address of the analog output module.
(data) is the value that is returned by the analog output module. The format of the data depends on the module's configured data format.
(cr) is the terminating character, carriage return (0Dh).

Example command: $0A6(cr)
response: !0A03.000(cr)
The command requests the analog output module at address 0Ah to return the last output value that it has received from an Analog Out command.
The analog output module returns the value 3.000 mA.

4021

6.1.8 $AA8

Name Current Readback command

Description The addressed analog output module is instructed to measure the current flowing through its current/voltage loop and return the measured data in the module's configured data format. The value returned may be a rough estimate of the real value.

Syntax **$AA8(cr)**
$ is a delimiter character.
AA (range 00-FF) represents the 2-character hexadecimal address of the analog output module that you want to retrieve the data from. The data are current/voltage loop.
8 is the Current feedback command.
(cr) is the terminating character, carriage return (0Dh).

Response **!AA(data)(cr)** if the command was valid.
?AA(cr) if an invalid command was issued.
There is no response if the module detects a syntax or communication error, or even if the specified address does not exist.
! delimiter character indicates that a valid command was received.
? delimiter character indicates that the command was invalid.
AA (range 00-FF) represents the 2-character hexadecimal address of the analog output module.
(data) is the value returned by the analog output module.
(cr) is the terminating character, carriage return (0Dh).

Example command: $0A8(cr)
response: !0A18.773(cr)
The command tells the analog output module at address 0Ah to measure its current loop and return the measured value. The analog output module returns the value 18.773 mA.

4021

6.1.9 $AA5

Name Reset Status command

Description Checks the Reset Status of the analog output module to see whether it has been reset since the last Reset Status command was issued.

Syntax **$AA5(cr)**

$ is a delimiter character.

AA (range 00-FF) represents the 2-character hexadecimal address of the analog output module who's Reset Status is to be returned.

5 is the Reset Status command.

(cr) is the terminating character, carriage return (0Dh).

Response **!AAS(cr)** if the command was valid.

?AA(cr) if an invalid command was issued.

There is no response if the module detects a syntax or communication error, or even if the specified address does not exist.

! delimiter character indicates that a valid command was received.

? delimiter character indicates that the command was valid.

AA (range 00-FF) represents the 2-character hexadecimal address of the analog output module.

S represents the Status bit which is returned by the analog output module. If S=1, the module is in reset mode since a Reset Status command had been issued already. If S=0, the module has not been reset since the last Reset Status command was not issued.

(cr) is the terminating character, carriage return (0Dh).

Example command: $395(cr)

response: !391(cr)

The analog output module at address 39h was reset or powered up after the last execution of the Reset Status command. When the command is executed once more, the analog output module will reply with !390(cr)

4021

6.1.10 $AAF

Name Read Firmware Version command

Description The command requests the analog output module at address AA to return the version code of its firmware.

Syntax **$AAF (cr)**

$ is a delimiter character.

AA (range 00-FF) represents the 2-character hexadecimal address that you want to access.

F is the Read Firmware Version command.

(cr) is the terminating character, carriage return (ODh).

Response **!AA(Version)(cr)** if the command is valid.

There is no response if the module detects a syntax or communication error, or if the specified address does not exist.

! is a delimiter character indicating that a valid command was received.

AA (range 00-FF) represents the 2-character hexadecimal address of an analog output module.

(Version) is the version code of the module's firmware at address AA.

(cr) is the terminating character, carriage return (ODh).

4021

6.1.11 $AAM

Name	Read Module Name
Description	The command requests the analog output module at address AA to return its name
Syntax	**$AAM (cr)** **$** is a delimiter character. **AA** (range 00-FF) represents the 2-character hexadecimal address that you want to access. **M** is the Read Module Name command. **(cr)** is the terminating character, carriage return (ODh)
Response	**!AA(Module Name)(cr)** if the command is valid. There is no response if the module detects a syntax or communication error, or even if the specified address does not exist. **!** is a delimiter character indicating that a valid command was received. **AA** (range 00-FF) represents the 2-character hexadecimal address of an analog output module. **(Module Name)** is the name of the module at address AA. For example, 4021 **(cr)** is the terminating character, carriage return (ODh).

6.2 Analog Output Module Command for ADAM-4024

Table 6.3: ADAM-4024 Command Review:

Command Set	Function	Response	Example
%AANNTTCCFF	Module Configuration : Set Address, Baud Rate, Check Sum **AA :** Current Module Address **NN :** New Module Address **TT :** Not Used For ADAM-4024 (Must Be 00) **CC :** Baud Rate Index 03 — 1200 bps 04 — 2400 bps 05 — 4800 bps 06 — 9600 bps 07 — 19200 bps 08 — 38400 bps 09 — 57600 bps 0A — 115200 bps **FF :** Control the parameter listed below Bit 7: Reserved Bit 6: Check Sum: 0-Disable 1-Enable Bit 5 – 2 : Slew Rate (see table below) Bit 1 – 0 : Reserved Slew Rate: 00 — immediately / immediately 01 — 0.0625 V/sec / 0.125 mA/sec 02 — 0.125 V/sec / 0.25 mA/sec 03 — 0.25 V/sec / 0.5 mA/sec 04 — 0.5 V/sec / 1.0 mA/sec 05 — 1.0 V/sec / 2.0 mA/sec 06 — 2.0 V/sec / 4.0 mA/sec 07 — 4.0 V/sec / 8.0 mA/sec 08 — 8.0 V/sec / 16.0 mA/sec 09 — 16.0 V/sec / 32.0 mA/sec 0A — 32.0 V/sec / 64.0 mA/sec 0B — 64.0 V/sec / 128.0 mA/sec	!AA	%0203000600
#AACn(data)	Direct Output CHn Data	!AACn (data)	#02C2+07.456 #02C1-03.454 #02C0+11.234
#AASCn(data)	Set data As CHn Start Up Data	!AASCn (data)	#02SC2+07.456 #02SC1-03.454 #02SC0+11.234

Table 6.3: ADAM-4024 Command Review:

#AAECn(data)	Set data As CHn Emergency Stop Data	!AAECn (data)	#02EC2 +07.456 #02EC1 -03.454 #02EC0 +11.234
#**	Synchronous Sample IDI	No Response	#**
$AA0Cn	Set Current Trim Data As CHn 4m A Calibration Parameter/EEPROM	!AA	$020C2
$AA1Cn	Set Current Trim Data As CHn 20m A Calibration Parameter/EPROM	!AA	$021C2
$AA2	Read Back Module Status	!AATTCCFF	$022
$AA3Cn(m)	Set Trim Data For CHn m :0 ~ 127 And If Negative Then Add 0x80 (m =xx) Ex.m=89 → -9 m=09 → +9	!AA	$02308
$AA4	Read Back The IDI Input By Synchronous Command (#**)	!AAx	$024
$AA5	Checks the Reset Status of the analog output module to see whether it has been reset since the last Reset Status command was issued.	!AAS	$025
$AA6Cn	Read Back CHn Last Output Value	!AA(data)	$026C2
$AA7CnRxx	Set CHn Output Type **AA:** Current Module Address **Cn:** Channel C: Prefix Command String n = 0,1,2,3 **Rxx:** Output Type (Range) R: Prefix Command String xx = 32 -10 V ~ +10 V xx = 30 0 ~ 20 mA xx = 31 4 ~ 20 mA	!AA	$027C2R32

Table 6.3: ADAM-4024 Command Review:

$AA8Cn	Read Back CHn Output Range	!AACnxx	$027C2
$AAACnZ	Enable/Disable (Z=1/0) CHn EMS Flag	!AA	$02AC21 $02AC20
$AABCn	Read CHn EMS Flag	!AACn1 !AACn0	$02BC2
$AADCn	Read Back CHn StartUp Data	!AA(data)	$02DC2
$AAECn	Read Back CHn Emergency Stop Data	!AA(data)	$02EC2
$AAF	Read Firmware Version	!AAAx.xx	$02F
$AAG	Reset Current Trim Data Variable To 0	!AA	$02G
$AAH	Read Current Trim Data Variable	!AAxx (xx=m)	$02H
$AAI	Read IDI	!AAx	$02I
$AAM	Read Module Name	!AA4024	$02M
$AANCn	Read Back CHn 4mA Calibration Parameter	!AAxx	$02NC2
$AAOCn	Read Back CHn 20mA Calibration Parameter	!AAxx	$02OC2
$AAPCn	Clear CHn 4mA Calibration Parameter / EEPROM	!AA	$02PC2
$AAQCn	Clear CHn 20mA Calibration Parameter / EEPROM	!AA	$02QC2
$AAX0nnnn	This command set the communication watchdog timer (WDT) cycle time. **AA:** (range 00-FF) 2-character hexadecimal address of the analog input module which is to be read. **X0:** the setting WDT command. **Nnnn:** (range 0000~9999) the specified value of communication cycle you want to set. (Unit: 0.1 second)	!AA	$02X01234
$AAX1	Read Communication Watchdog Timer Cycle Setting. **AA:** (range 00-FF) 2-character hexadecimal address of the analog input module which is to be read. **X1:** the reading WDT cycle command.	!AA	$02X1

Chapter 7

Digital I/O, Relay ouput and Counter/ Frequency Command Set

7.1 Digital I/O and Relay Output Module Command

Command Syntax	Description	I/O Module
%AANNTTCCFF	Sets the address, input range, baud rate, and/or checksum status to a digital I/O module	4050, 4051, 4052, 4053, 4055, 4056S, 4056SO, 4060, 4068, 4069
$AA6	Returns the values of digital I/O channels of the addressed module	4050, 4051, 4052, 4053, 4055, 4056S, 4056SO, 4060, 4068, 4069
#AABB(data)	Writes specified values to either a single channel or all channels simultaneously	4050, 4055, 4056S, 4056SO, 4060, 4068, 4069,
#**	Orders all digital I/O modules to sample their input values and store them in a special register	4050, 4051, 4052, 4053, 4055, 4060, 4068
$AA4	Returns the value that was stored in the specified digital I/O module that was stored after an #** command	4050, 4051, 4052, 4053, 4055, 4060, 4068
$AA2	Returns the configuration parameters for the specified digital I/O module	4050, 4051, 4052, 4053, 4055, 4056S, 4056SO, 4060, 4068, 4069
$AA5	Indicates whether a specified digital I/O module was reset after the last time the $AA5 command was issued	4050, 4051, 4052, 4053, 4055, 4056S, 4056SO, 4060, 4068, 4069
$AAF	Return firmware version code from the specified digital I/O module	4050, 4051, 4052, 4053, 4055, 4056S, 4056SO, 4060, 4068, 4069
$AAM	Return the module name from the specified digital I/O module	4050, 4051, 4052, 4053, 4055, 4056S, 4056SO, 4060, 4068, 4069
@AA	Returns the values of the digital I/O channel in the addressed module. This command is the same with $AA6 command	4056S, 4056SO
$AAX0TTTTDD	Force the DO channels to safety status when communication is time-out and over pre-defined period.	4055, 4056SO, 4056SO, 4060, 4068, 4069
$AAX1	Read the time-out setting and pre-defined safety status of DO channels.	4055, 4056SO, 4056SO, 4060, 4068, 4069
$AAX2	Requests the Safty Flag of the addressed digital I/O module to see whether the safety value has been executed since Write Safety Value command was set.	4055, 4056S, 4056SO, 4060, 4068
$AAE0	Read the Over Current Status Flag	4056SO
$AAP	The command requests the module at address AA to return the low power status	4069
$AAS	The command requests the module at address AA to set and return the low	4069

4050, 4051, 4052, 4053, 4055,
4056S, 4056SO, 4060, 4068, 4069

7.1.1 %AANNTTCCFF

Name Configuration command

Description Configure address, baud rate and/or checksum status of the digital I/O module.

Syntax **%AANNTTCCFF(cr)**

% is a delimiter character.

AA (range 00-FF) represents the 2-character hexadecimal address which is to be configured.

NN represents the new hexadecimal address ranging from 00h to FFh of the digital I/O module.

TT represents the type of code that is always set to 40 for a digital I/O module.

CC represents the baud rate code.

(Refer to Table 7-1 on next page)

FF is a hexadecimal number that equals to a 8-bit parameter that represents the checksum and protocol status. Bits 3 through 5 and bit 0, 1, 7 are not used and are being set to 0. (Refer to Figure 7-1 below)

Bit 6 is the selection of checksum and bit 2 is the selection of protocol. (0: advantech; 1: modbus). (Modbus protocol is supported by ADAM-4052, 4051, 4055, 4056S, 4056SO, 4068 only)

(cr) is the terminating character, carriage return (0Dh).

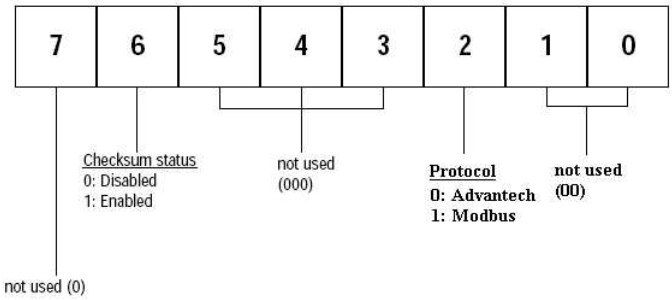

Figure 7.1 Data format for FF (8-bit parameter)

Response **!AA (cr)** if the command is valid.
?AA(cr) if an invalid parameter was entered or the INIT* terminal was not grounded when changing baud rate or checksum settings were attempted.
There is no response if the module detects a syntax or communication error, or even if the specified address does not exist.
! is a delimiter character which indicates a received valid command.
? is a delimiter character which indicates an invalid command.
AA (range 00-FF) represents the 2-character hexadecimal address of a digital I/O module.
(cr) is the terminating character, carriage return (0Dh).

Example command: %2324400600(cr)
response: !24(cr)
The command tries to configure module by changing address 23h to address 24h, assigning baud rate 9600, setting no checksum checking and supporting Advantech protocol. The response indicates that the configuration was successful.

Table 7.1: Baud Rate Codes

Baud Rate Code (Hex)	Baud Rate
03	1200 bps
04	2400 bps
05	4800 bps
06	9600 bps
07	19.2 kbps
08	38.4 kbps
09	57.6 kbps
0A	115.2 kbps

Note! *All configuration parameters can be changed dynamically, except checksum and baud rate parameters. They can only be altered when the INIT* terminal is grounded. (Please Refer to Baud rate and Checksum, in Chapter 2 for the correct procedure.)*

4050, 4051, 4052, 4053, 4055,
4056S, 4056SO, 4060, 4068, 4069

7.1.2 $AA6

Name Digital Data In command

Description This command requests the specified (AA) module to return the status of its digital input channels and feedback value from its digital output channels.

Syntax **$AA6(cr)**
$ is a delimiter character.
AA (range 00-FF) represents the 2-character hexadecimal address of the module.
6 is the Digital Data In command.
(cr) is the terminating character, carriage return (0Dh).

Response **!(dataOutput)(dataInput)00(cr)**
if the command was valid. **(ADAM-4050)**
!(dataInput)00(cr)
if the command was valid. **(ADAM-4051)**
!(dataInput)0000(cr)
if the command was valid. **(ADAM-4052)**
!(dataInput)(dataInput) 00 (cr)
if the command was valid. **(ADAM-4053)**
!(dataOutput)(dataInput)00(cr)
if the command was valid. **(ADAM-4055)**
!(dataOutput)00(cr)
if the command was valid. **(ADAM-4056S/4056SO)**
!(dataOutput)0000(cr)
if the command was valid. (ADAM-4060/4068)
?AA(cr) if an invalid command has been issued.
There is no response if the module detects a syntax or communication error, or even if the specified address does not exist.
! delimiter character indicates that a valid command was received.
? delimiter character indicates that the command was invalid.
AA (range 00-FF) represents the responding 2-character hexadecimal address of the module.
(dataOutput) two-character hexadecimal value which is either the feedback of a digital output channel or a relay. For ADAM-4056S and ADAM-4056SO, it is four-character hexadecimal for representing 12 channel digital output.
(dataInput) two-character hexadecimal value representing the input values of the digital I/O module.
(cr) is the terminating character, carriage return (0Dh).

Example command: $336(cr)
response: !112200(cr)
This example is for ADAM-4050. The first two characters,

11h (00010001), of the response indicates that digital output channels 0 and 4 are ON and channels 1, 2, 3, 5, 6, 7 are OFF. The second two characters of the response, 22h (00100010), indicates that digital input channels 1 and 5 are HIGH and channels 0, 2, 3, 4, 6, 7 are LOW.

command: $036(cr)
response: !BEDE00(cr)
This example is for ADAM-4053. The first two characters, BEh (10111110), of the response indicates that digital input channels 8 and 14 are LOW and channels 9, 10, 11, 12, 13 and 15 are HIGH. The second two characters, DEh (11011110), of the response indicates that digital input channels 0 and 5 are LOW and channels 1, 2, 3, 4, 6, 7 are HIGH.

command: $056(cr)
response: !017A00(cr)
This example is for ADAM-4056S or ADAM-4056SO. The first character of the response is always 0. The next three characters, 17A (000101111010), are the status of 12 channel digital outputs. The detail status is as below.

Digital value	0	0	0	1	0	1	1	1	1	0	1	0
ADAM-4056S/4056SO Channel no.	11	10	9	8	7	6	5	4	3	2	1	0

4050, 4055, 4056S,
4056SO, 4060, 4068, 4069

7.1.3 #AABB

Name Digital Data Out command

Description The command either sets a single digital output channel or sets all digital output channels simultaneously.

Syntax **#AABB(data)(cr)**

is a delimiter character.

AA (range 00-FF) represents the 2-character hexadecimal address of the output value.

BB is used to indicate whether all channels will be set or a single channel will be set. In the last case, BB will also indicate which channel it is. Writing data (a byte) to all channels should make both characters to be zero (BB=00). Writing data (a bit) to a single channel, however, will make the first character 1and the second character ranging from 0 to B. The second character indicates the channel number.

(data) is the hexadecimal representation of the digital output value(s). Two characters are for ADAM-4050, ADAM-4055, ADAM-4060 and ADAM-4068. Four characters are for ADAM-4056S and 4056SO.

ADAM-4050, 4055, 4060 and 4068:

When writing to a single channel (bit), the first character is always 0. The value of the second character will be either 0 or 1.

When writing to all channels (byte), both characters are significant (range 00h-FFh). The digital equivalent of these two hexadecimal characters represents the value of the channels. The amount of channels on ADAM-4050, ADAM-4055, ADAM-4060 and ADAM-4068 differ. The value 7A representation for 8 channeled ADAM-4050, ADAM-4055 and ADAM-4068 would be the following:

Digital Value:	0	1	1	1	1	0	1	0
ADAM-4050/4055/4068 channel no.	7	6	5	4	3	2	1	0

Since the ADAM-4060 only has four output channels, all the relevant values lie between 00h and 0Fh. The value 0Ah for the ADAM-4060 would represent the following:

Digital Value:	0	0	0	0	1	0	1	0
ADAM-4060 channel no.	-	-	-	-	3	2	1	0

ADAM-4056S and 4056SO:

When writing to a single channel (bit), the first three characters are always 0. The value of the last character is either 0 or 1.

When writing to all channels (byte), the first character zero is irrelevant, but the rest are significant (range 000h-FFFh). The digital equivalent of last three hexadecimal characters represents the value of channels.
For example: 017A
First character is always 0
2nd~4th character means the the channel values 17A.

Digital value	0	0	0	1	0	1	1	1	1	0	1	0
Adam-4056S/4056SO channel no.	11	10	9	8	7	6	5	4	3	2	1	0

(cr) is the terminating character, carriage return (0Dh).

Response

>(cr) if the command was valid.
?AA(cr) if an invalid command has been issued.
There is no response if the module detects a syntax or communication error, or even if the specified address does not exist.
> is a delimiter character which indicates a valid command.
? is a delimiter character which indicates an invalid command.
AA (range 00-FF) represents the responding 2-character hexadecimal address of the module.
(cr) is the terminating character, carriage return (0Dh).

Examples

command: #140005(cr)
response: >(cr)
An output byte with value 05h (00000101) is sent to the digital I/O module at address 14h (Either ADAM-4050 or ADAM-4060). Its channel 0 and 2 will be set to ON. Other channels are set to OFF.

command: #151201(cr)
response: >(cr)
An output bit with value 1 is sent to channel 2 at address 15h of a digital I/O module (Either ADAM-4050 or ADAM-4060).
Channel 2 of the digital I/O module is set to ON.

command: #1400017A(cr)
response: >(cr)
An output byte with value 017Ah (0000000101111010) is sent to the digital I/O module at address 14h (Either ADAM-4056S or ADAM-4056SO). Its channel 1, 3, 4, 5, 6, and 8 will be set to ON. Other channels are set to OFF.

command: #15120001(cr)
response: >(cr)
An output bit with value 1 is sent to channel 2 of a digital I/O module at address 15h (Either ADAM-4056S or ADAM-4056SO). Channel two of the digital I/O module is set to ON.

4050, 4051, 4052, 4053,
4055, 4060, 4068

7.1.4 #**

Name Synchronized Sampling command

Description Orders all (analog or digital) input modules to sample their input values and store them into a special register.

Syntax **#****
is a delimiter character.
** is the Synchronized Sampling command.
The terminating character, in the form of a carriage return (0Dh), is not required.

Response The digital I/O modules will not respond to the Synchronized Sampling command. In order to retrieve the data, you must execute a Read Synchronized Data command for every module separately.

4050, 4051, 4052, 4053,
4055, 4060, 4068

7.1.5 $AA4

Name Read Synchronized Data command

Description The addressed digital I/O module is instructed to return the value that was stored in its register by a Synchronized Sampling command.

Syntax **$AA4(cr)**
$ is a delimiter character.
AA (range 00-FF) represents the 2-character hexadecimal address of returning data.
4 is the Read Synchronized Data command.
(cr) is the terminating character, carriage return (0Dh).

Response **!(status)(dataOutput)(dataInput)00(cr)**
if the command was valid. **(ADAM-4050)**
!(status)(dataInput)00(cr)
if the command was valid. **(ADAM-4051)**
!(status)(dataInput)0000(cr)
if the command was valid. **(ADAM-4052)**
!(status)(dataInput)(dataInput)00(cr)
if the command was valid. **(ADAM-4053)**
!(status)(dataOutput)0000(cr)
if the command was valid. **(ADAM-4060/4068)**
?AA(cr) if an invalid command has been issued.
There is no response if the module detects a syntax or communication error, or even if the specified address does not exist.

! is a delimiter character which indicates a valid command.
? is a delimiter character which indicates an invalid command.
AA (range 00-FF) represents the responding 2-character hexadecimal address of the digital I/O module.
(status) will tell you if the data (data) from the last Synchronized Sampling command (#**) have already been sent. If (status=1), data have only been sent for the first time after a Synchronized Sampling command was issued. If (status=0), then the data have been sent at least once since no Synchronized Sampling command was issued.
(dataOutput) two-character hexadecimal value which is either the feedback of a digital output channel or a relay.
(dataInput) two-character hexadecimal value representing the input values of the digital I/O module.
(cr) is the terminating character, carriage return (0Dh).

Example

command: $064(cr)
response: !1055100(cr)
The command asks the ADAM-4050 digital I/O module at address 06h to send its digital input data that was gathered during the last Synchronized Sampling command. The module returns the value 1055100 with status equals to 1 which also represents that data have not been sent before. From inspection, the value has dataOutput = 05h (00000101), ON for digital output channels 0 and 2 and OFF for channels 1, 3, 4, 5, 6, 7. It also has dataInput = 51h (01010001) which represents HIGH for digital input channels 0, 4, 6 and LOW for channels 1, 2, 3, 4, 5.
The digital I/O module responds with data = 055100 and status = 1. These mean that the data has been sent for the first time.

command: $064(cr)
response: !0055100(cr)
The command asks the digital I/O module at address 06h to send its digital input data.
The digital I/O module responds with data = 055100 and status = 0, which means that it has sent the same data at least once before. This may also indicates that a previous Synchronized Sampling command was not received!

4050, 4051, 4052, 4053, 4055,
4056S, 4056SO, 4060, 4068, 4069

7.1.6 $AA2

Name Configuration Status command

Description Returns the configuration parameters of the digital I/O module.

Syntax **$AA2(cr)**
$ is a delimiter character.
AA (range 00-FF) represents the 2-character hexadecimal address that you will access to.
2 is Configuration Status command.
(cr) is the terminating character, carriage return (0Dh).
This command requests the return of the configuration data from the digital I/O module at address AA.

Response **!AATTCCFF(cr)** if the command is valid.
?AA(cr) if an invalid command has been issued.
There is no response if the module detects a syntax or communication error, or even if the specified address does not exist.
! is a delimiter character which indicates a valid command.
? is a delimiter character which indicates an invalid command.
AA (range 00-FF) represents the 2-character hexadecimal address of the module.
TT represents the type of code, which is always 40.
CC represents the baud rate codes.
(Refer to Table 7-2 on next page).
The hexadecimal number **FF** which is converted to a 8-bit parameter represents the checksum and protocol status .
Bits 3 through 5 and bit 0, 1, 7 are not used, so they are set to 0. (Refer to Figure 7-2 on next page)
Bit 6 is the selection of checksum and bit 2 is the selection of protocol (0: advantech, 1: modbus).
(Modbus protocol is supported by ADAM-4051, 4055, 4056S, 4056SO, 4068 only)
(cr) is the terminating character, carriage return (ODh).

Example command: $452 (cr)
response: !45400600 (cr)
The command asks the digital I/O module at address 45h to send its configuration data.
The digital I/O module at address 45h responds with baud rate 9600, no checksum function and module supports for Advantech protocol.

Table 7.2: Baud Rate Codes	
Baud Rate Code (Hex)	**Baud Rate**
03	1200 bps
04	2400 bps
05	4800 bps
06	9600 bps
07	19.2 kbps
08	38.4 kbps
09	57.6 kbps
0A	115.2 kbps

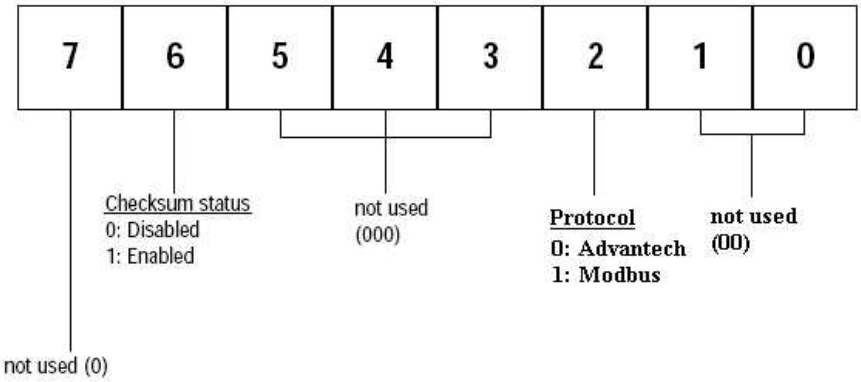

Figure 7.2 Data format for FF (8-bit parameter)

4050, 4051, 4052, 4053, 4055,
4056S, 4056SO, 4060, 4068, 4069

7.1.7 $AA5

Name Reset Status command

Description Requests the Reset Status of the addressed digital I/O module to see whether it has been reset since the last Reset Status command.

Syntax **$AA5(cr)**
$ is a delimiter character.
AA (range 00-FF) represents the 2-character hexadecimal address whose Reset Status is to be returned.
5 is the Reset Status command.
(cr) is the terminating character, carriage return (0Dh).

Response **!AAS(cr)** if the command was valid.
?AA(cr) if an invalid command has been issued.
There is no response if the module detects a syntax or communication error, or even if the specified address does not exist.
! is a delimiter character which indicates a valid command.
? is a delimiter character which indicates an invalid command.
AA (range 00-FF) represents the 2-character hexadecimal address which is to be calibrated.
S represents the Status bit that is returned by the digital I/O module. If S=1, the module has been reset since it was issued last time. If S=0, the module has not been reset since the last Reset Status command was not issued.
(cr) is the terminating character, carriage return (0Dh).

Example command: $395(cr)
response: !390(cr)
The command tells the digital I/O module at address 39h to return its Reset Status.
The digital I/O module at address 39h returns the value S=0.
This indicates that the digital I/O module has not been reset or powered on since a Reset Status command was issued last time.

4050, 4051, 4052, 4053, 4055,
4056S, 4056SO, 4060, 4068, 4069

7.1.8 $AAF

Name Read Firmware Version command

Description The command requests the digital I/O module at address **AA** to return the version code of its firmware

Syntax **$AAF (cr)**
$ is a delimiter character.
AA (range 00-FF) represents the 2-character hexadecimal address that you will access to.
F is the Read Firmware Version command.
(cr) is the terminating character, carriage return (ODh).

Response **!AA(Version)(cr)** if the command is valid.
There is no response if the module detects a syntax or communication error, or even if the specified address does not exist.
! is a delimiter character which indicates a valid command.
AA (range 00-FF) represents the 2-character hexadecimal address of the module.
(Version) is the version code of the module's firmware at address AA.
(cr) is the terminating character, carriage return (ODh).

4050, 4051, 4052, 4053, 4055,
4056S, 4056SO, 4060, 4068, 4069

7.1.9 $AAM

Name Read Module Name command

Description The command requests the digital I/O module at address AA to return its name

Syntax **$AAM (cr)**
$ is a delimiter character.
AA (range 00-FF) represents the 2-character hexadecimal address that you will access to.
M is the Read Module Name command.
(cr) is the terminating character, carriage return (ODh).

Response **!AA(Module Name)(cr)** if the command is valid.
There is no response if the module detects a syntax or communication error, even or if the specified address does not exist.
! is a delimiter character which indicates a valid command.
AA (range 00-FF) represents the 2-character hexadecimal address of the module.
(Module Name) is the name of the module at address AA.
For example, 4052
(cr) is the terminating character, carriage return (ODh).

4055, 4056S, 4056SO,
4060, 4068, 4069

7.1.10 $AAX0TTTTDD

Name Write Safety Value command

Description Force the DO channels to safety status when communication is in time-out and over pre-defined period.

Syntax **$AAX0TTTTDD(cr)**

$ is a delimiter character.

AA (range 00-FF) represents the 2-character hexadecimal address that you will access to.

X0 is the Write Safety Value command.

TTTT is the time divided by 100ms and shown in hexadecimal number

DD is the two-hexadecimal character representing the desired input safety value. The first character D is always 0, and the others are the channels values.

For Example, 017A

First character is always 0

The meaning of 17A is as follows:

Digital value	0	0	0	1	0	1	1	1	1	0	1	0
Adam-4056SO channel no.	11	10	9	8	7	6	5	4	3	2	1	0

17A means that the status of channel 1, 3, 4, 5, 6, 8 is ON; and the rest are OFF.

(cr) is the terminating character, carriage return (0Dh).

Response **>(cr)** if the command was valid.

?AA(cr) if an invalid command has been issued.

There is no response if the module detects a syntax or communication error, or even if the specified address does not exist.

> is a delimiter character which indicates a valid command.

? is a delimiter character which indicates an invalid command.

AA (range 00-FF) represents the responding 2-character hexadecimal address of the module.

(cr) is the terminating character, carriage return (0Dh).

4055, 4056S, 4056SO,
4060, 4068, 4069

7.1.11 $AAX1

Name Read Safety Value command

Description Read the time-out setting and pre-defined safety status of DO channels.

Syntax **$AAX1(cr)**

$ is a delimiter character.

AA (range 00-FF) represents the 2-character hexadecimal address that you will access to.

X1 is the Read Safety Value command.

(cr) is the terminatng character, carriage return (0Dh).

Response **! TTTTDDDD(cr)** if the command is valid.

?AA(cr) if an invalid command has been issued.

! is a delimiter character which indicates a valid command.

? is a delimiter character which indicates an invalid command.

TTTT is the time, 100 ms per number.

DDDD is the four-hexadecimal character representing the desired input safety value. The first character D is always 0, and the others are the channels values.

For Example, 017A

First character is always 0

The meaning of 17A is as follows:

Digital value	0	0	0	1	0	1	1	1	1	0	1	0
Adam-4056SO channel no.	11	10	9	8	7	6	5	4	3	2	1	0

17A means channels 1, 3,4,5, 6, 8 are ON, and the rest are OFF.

(cr) is the terminating character, carriage return (ODh).

4055, 4056S, 4056SO,
4060, 4068, 4069

7.1.12 $AAX2

Name Read Safety Flag command

Description Requests the Safety Flag of the addressed digital I/O module to see whether the safety value has been executed since Write Safety Value command was set.

Syntax **$AAX2(cr)**
$ is a delimiter character.
AA (range 00-FF) represents the 2-character hexadecimal address that you will access to.
X2 is the Read Safety Flag command.

Response **!XX (cr)** if the command is valid.
XX is two-hexadecimal character – (00: OFF, 01: ON)
!X (cr) for ADAM-4068
X is one-hexadecimal character – (0: OFF, 1: ON)
!00(cr) for ADAM-4069 response will show 00 regardless of its status .
?AA(cr) if an invalid command has been issued.
! is a delimiter character which indicates a valid command.
? is a delimiter character which indicates an invalid command.
(cr) is the terminating character, carriage return (ODh).

4056SO

7.1.13 $AAE0

Name Read and Clear over Current Status Flag command

Description Read the Over Current Status Flag and Clear the Flag simultaneously.

Syntax **$AAE0(cr)**
$ is a delimiter character.
AA (range 00-FF) represents the 2-character hexadecimal address that you will access to.
E0 is the Read and Clear over Current Status Flag command.
(cr) is the terminating character, carriage return (ODh).

Response **!AAX(cr)**: if the command is valid.
?AA(cr): if an invalid command has been issued.
X is one-hexadecimal character (range from 0 to 7)
X=0: No over current occur
X=1: DO0~3 has over current occurred
X=2: DO4~7 has over current occurred
X=4: DO8~11 has over current occurred
! is a delimiter character which indicates a valid command

? is a delimiter character which indicates an invalid command
(cr) is the terminating character, carriage return (ODh).

4069

7.1.14 $AAP

Name Read the Low Power Status of Module command

Description The command requests the module at address AA to return the low power status of module

Syntax **$AAP(cr)**
$ is a delimiter character.
AA (range 00-FF) represents the 2-character hexadecimal address that you will access to.
P is the Read the Low Power Status of Module command.
(cr) is the terminating character, carriage return (ODh).

Response **!AAS(cr)** if the command was valid.
?AA(cr) if an invalid command has been issued.
There is no response if the module detects a syntax or communication error, or even if the specified address does not exist.
! is a delimiter character which indicates a valid command
? is a delimiter character which indicates an invalid command
AA (range 00-FF) represents the calibrated 2-character hexadecimal address of the module.
S represents the Status bit from the low power status. When the logic equals to 1, it represents low power. When it equals to zero, it means normal.
(cr) is the terminating character, carriage return (0Dh).

4069

7.1.15 AAS

Name Change and Read the Low Power Mode of Module command

Description The command requests the module at address AA to change and return the status of low power mode of module

Syntax **$AAS(cr)**

$ is a delimiter character.

AA (range 00-FF) represents the 2-character hexadecimal address that you will access to.

S is the Change and Read the Low Power Mode of Module command

(cr) is the terminating character, carriage return (ODh).

Response **!AAX(cr)** if the command was valid.

?AA(cr) if an invalid command has been issued.

There is no response if the module detects a syntax or communication error, or even if the specified address does not exist.

! is a delimiter character which indicates a valid command

? is a delimiter character which indicates an invalid command

AA (range 00-FF) represents the calibrated 2-character hexadecimal address of the module.

X represents the Status bit from the low power status. When the logic is 1, it represents low power. However, if the logic is 0, it is normal

(cr) is the terminating character, carriage return (0Dh).

4052, 4055, 4056S,
4056SO, 4068, 4069

7.1.16 $AAXnnnn

Name	Watchdog Timer Setting command
Description	This command set the communication watchdog timer (WDT) cycle time.
Syntax	**$AAXnnnn(cr)** **$** is a delimiter character. **AA** (range 00-FF) represents the 2-character hexadecimal address of the analog input module which is to be read. **X** is Watchdog Timer Setting command. **nnnn** (range 0000~9999) represents the specified value of communication cycle you want to set. (Unit: 0.1 second) **(cr)** is the terminating character, carriage return (0Dh).
Response	**!AA(cr)** if the command was valid. **?AA(cr)** if an invalid operation was entered. There is no response if the module detects a syntax error or communication error or if the specified address does not exist. **!** delimiter character indicates a valid command was received. **?** delimiter character indicates the command was invalid. **AA** (range 00-FF) represents the 2-character hexadecimal address of the analog input module. **(cr) r**epresents terminating character, carriage return (0Dh).
Example	command: $02X1234(cr) response: !02(cr) The command set the WDT cycle as 1234 in the input module at address 02.

Caution! *If the value of "nnnn" is 0000, the communication WDT function will be disable*

4052, 4055, 4056S,
4056SO, 4068, 4069

7.1.17 $AAY

Name Read Communication Watchdog Timer Cycle Setting command

Description This command read the setting of communication watchdog timer (WDT) cycle time.

Syntax **$AAY(cr)**
$ is a delimiter character.
AA (range 00-FF) represents the 2-character hexadecimal address of the analog input module which is to be read.
Y is the Read Communication Watchdog Timer Cycle Setting command.
(cr) is the terminating character, carriage return (0Dh).

Response **!AAnnnn(cr)** if the command was valid.
?AA(cr) if an invalid operation was entered.
There is no response if the module detects a syntax error or communication error or if the specified address does not exist.
! delimiter character indicates a valid command was received.
? delimiter character indicates the command was invalid.
AA (range 00-FF) represents the 2-character hexadecimal address of the analog input module.
nnnn (range 0000~9999) represent the specified value of communication cycle you read. (Unit: 0.1 second)
(cr) represents terminating character, carriage return (0Dh).

Example command: $02Y(cr)
response: !020030(cr)
The command read the WDT cycle as 0030 in the input module at address 02.

7.2 Counter/Frequency Module Command

7.2.1 Configuration, Counter Input and Display Command Set

Command Syntax	Description	I/O Module
%AANNTTCCFF	Sets the address, input mode, baud rate, checksum status and/or frequency gate time for a specified counter/frequency module	4080, 4080D
$AA2	Requests the return of the configuration data from the counter/frequency module	4080, 4080D
$AAF	Requests the counter/frequency module to return the version code of its firmware	4080, 4080D
$AAM	Requests the counter/frequency module to return its name	4080, 4080D
$AABS	Set the input signal mode of the specified counter/frequency module to either non-isolated (TTL) or photo-isolated.	4080, 4080D
$AAB	Read the input mode of the specified counter/frequency module.	4080, 4080D
#AAN	Instructs the addressed counter/ frequency module to read the counter or frequency value of counter 0 or counter 1 and return the acquired data.	4080, 4080D
$AA8V	Select whether LED will display data from the counter/frequency module directly or from the host computer.	4080D
$AA8	Read the LED Data Origin status which determines whether LED will display data from the counter/ frequency module directly or from the host computer	4080D
$AA9(data)	The host computer sends data to the addressed module to display on its LED. This command is valid only after selecting to display host computer data ($AA8V)	4080D

4080, 4080D

7.2.1.1 %AANNTTCCFF

Name Configuration command

Description Sets the address, input mode, baud rate, checksum status and frequency gate time for a specified counter/frequency module

Syntax **%AANNTTCCFF (cr)**

% is a delimiter character.

AA (range 00-FF) represents the 2-character hexadecimal address that you will access to.

NN represents the new hexadecimal address of the counter/frequency module. Range is from 00h to FFh.

TT represents the input mode.

50h : counter input mode

51h : frequency measurement mode

CC represents the baud rate code.

(Refer to Table 7-3 on next page).

Hexadecimal value FF which is converted to an 8-bit parameter represents the checksum status and frequency gate time. The layout of the 8-bit parameter is shown in Figure 7-3 below.

Bits 0, 1, 3, 4, 5 and 7 are not used and are set to 0.

(cr) is the terminating character, carriage return (0Dh).

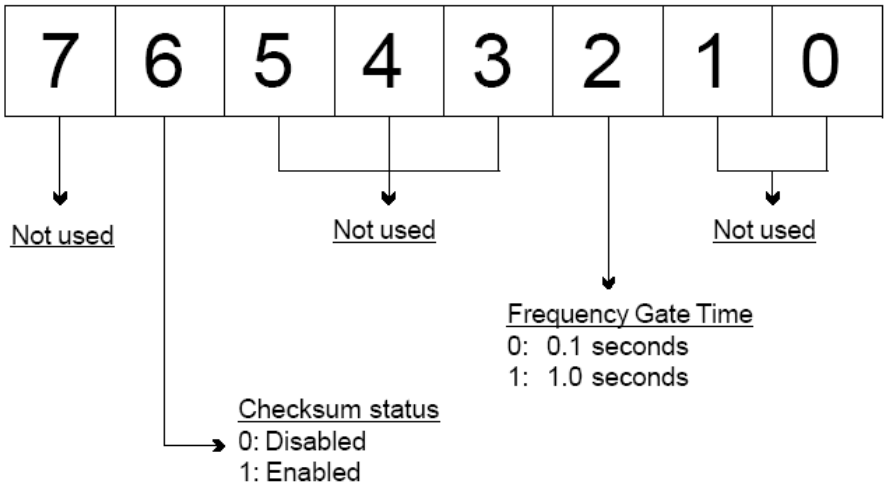

Figure 7.3 Data format for FF (8-bit parameter)

Response **AA(cr)** if the command is valid.

?AA(cr) if an invalid parameter was entered or the INIT*

terminal was not grounded when changing baud rate or checksum setting were attempted.
There is no response if the module detects a syntax or communication error, or even if the specified address does not exist.
! is a delimiter character which indicates a valid command.
? is a delimiter character which indicates an invalid command.
AA (range 00-FF) represents the 2-character hexadecimal address of the module.
(cr) is the terminating character, carriage return (0Dh).

Example

command: %0120510600(cr)
response: !20(cr)
The ADAM 4080D module is configured by changing address 01 to a new address 20, choosing frequency measurement module, assigning 9600 to baud rate, setting frequency gate time 0.1 second and no checksum checking or generation.
The response indicates that the command was received.
Wait seven seconds to let the new configuration settings take effect before you issue a new command to the module.

Table 7.3: Baud Rate Codes

Baud Rate Code (Hex)	Baud Rate
03	1200 bps
04	2400 bps
05	4800 bps
06	9600 bps
07	19.2 kbps
08	38.4 kbps

Caution! *You can change all configuration parameters dynamically except checksum and baud rate parameters. They can only be altered when the INIT* terminal is grounded.*

4080, 4080D

7.2.1.2 $AA2

Name Configuration Status command

Description The command requests the return of the configuration data from the counter/frequency module at address AA.

Syntax **$AA2(cr)**

$ is a delimiter character.

AA (range 00-FF) represents the 2-character hexadecimal address that you will access to.

2 is the Configuration Status command.

(cr) is the terminating character, carriage return (0Dh).

Response **!AATTCCFF (cr)** if the command is valid.

?AA(cr) if an invalid operation was entered

There is no response if the module detects a syntax or communication error, or even if the specified address does not exist.

! is a delimiter character which indicates a valid command.

? is a delimiter character which indicates an invalid command.

AA (range 00-FF) represents the 2-character hexadecimal that you will access to.

TT (50h or 51h) represents the type of code. 50h means using module as a counter. 51h means using module as a frequency measurement module.

CC represents the baud rate code.

Hexadecimal value FF which also equals to an 8-bit parameter represents the checksum status and frequency gate time. The layout of the 8-bit parameter is shown in figure 4-5. The bits are not used and are set to 0.

(cr) is the terminating character, carriage return (0Dh)

(Also see the %AANNTTCCFF configuration command)

4080, 4080D

7.2.1.3 $AAF

Name Read Version command

Description The command requests the analog input module at address AA to return the version code of its firmware.

Syntax **$AAF (cr)**

$ is a delimiter character.

AA (range 00-FF) represents the 2-character hexadecimal address that you will access to.

F is the Read Version command.

(cr) is the terminating character, carriage return (0Dh).

Response **!AA(Version)(cr)** if the command is valid.

There is no response if the module detects a syntax or communication error, or even if the specified address does not exist.

! is a delimiter character which indicates a valid command.

AA (range 00-FF) represents the 2-character hexadecimal address of the module.

(Version) is the version code of the module's firmware at address AA.

(cr) is the terminating character, carriage return (0Dh).

4080, 4080D

7.2.1.4 $AAM

Name Read Module Name command

Description The command requests the counter/frequency module at address AA to return its name

Syntax **$AAM (cr)**

$ is a delimiter character.

AA (range 00-FF) represents the 2-character hexadecimal address that you will access to.

M is the Read Module Name command.

(cr) is the terminating character, carriage return (0Dh).

Response **!AA(Module Name)(cr)** if the command is valid.

There is no response if the module detects a syntax or communication error, or even if the specified address does not exist.

! is a delimiter character which indicates a valid command.

AA (range 00-FF) represents the 2-character hexadecimal address of the module.

(Module Name) is the name of the module at address AA.

For example, 4080D
(cr) is the terminating character, carriage return (0Dh).

4080, 4080D

7.2.1.5 $AABS

Name Set Input Mode command

Description Set the input signal mode of the specified counter/ frequency module to either non-isolated (TTL) or photo-isolated.

Syntax **$AABS(cr)**
$ is a delimiter character.
AA (range 00-FF) represents the 2-character hexadecimal address that you will access to.
B is the Set Input Signal Mode command.
S indicates the input signal mode. When S = 0, the module is configured to non-isolated (TTL) input. If S = 1, the module is configured to photo-isolated input.
(cr) is the terminating character, carriage return (0Dh).

Response **!AA(cr)** if the command is valid.
There is no response if the module detects a syntax or communication error, or even if the specified address does not exist.
! is a delimiter character which indicates a valid command.
AA (range 00-FF) represents the 2-character hexadecimal address of the module.
(cr) is the terminating character, carriage return (0Dh).

Example command: $03B0(cr)
response: !03(cr)
The command configures the counter/frequency modules at address 03 to retrieve a non-isolated input. The module replies by sending its address to indicate that the command was executed.

Caution! *The input mode command is not related to a specific channel. When the input mode is set both channels are changed accordingly.*

4080, 4080D

7.2.1.6 $AAB

Name Read Input Mode command

Description Read the input mode of the specified counter/frequency module.

Syntax **$AAB(cr)**

$ is a delimiter character.

AA (range 00-FF) represents the 2-character hexadecimal address that you will access to.

B is the Read Input Mode command.

(cr) is the terminating character, carriage return (0Dh).

Response ! **AAS(cr)** if the command is valid.

There is no response if the module detects a syntax or communication error, or even if the specified address does not exist.

! is a delimiter character which indicates a valid command.

AA (range 00-FF) represents the 2-character hexadecimal address of the module.

S indicates the input signal mode. When S = 0, the module is configured to non-isolated (TTL) input. If S = 1, the module is configured to photo-isolated input.

(cr) is the terminating character, carriage return (0Dh).

Example command: $03B(cr)

response: !030(cr)

The command requests the counter/frequency module at address 03 to return its input mode. The module replies by setting the input mode to retrieve non-isolated input.

4080, 4080D

7.2.1.7 $AAN

Name Counter or Frequency Value command

Description Instructs the addressed counter/frequency module at address AA to read the counter or frequency value of counter 0 or counter 1 and return the acquired data.

Syntax **#AAN(cr)**

is a delimiter character.

AA (range 00-FF) represents the 2-character hexadecimal address that you will access to.

N represents the counter number.

N=0 represents counter 0

N=1 represents counter 1

(cr) is the terminating character, carriage return (0Dh).

Response **>data(cr)** if the command is valid.

?AA(cr) if an invalid operation was entered.

There is no response if the module detects a syntax or communication error, or even if the specified address does not exist.

? is a delimiter character which indicates an invalid command.

AA (range 00-FF) represents the 2-character hexadecimal address of the module.

(data) is the value that is retrieved by the module from reading counter 0 or counter 1. The data format consists of eight hexadecimal characters.

(cr) is the terminating character, carriage return (0Dh).

Example command: #120(cr)

response: >000002FE(cr)

The command requests the counter/frequency module at address 12 to read the counter 0 and return the data. The counter/frequency module at address 12 responds with value 000002FE (hexadecimal) of counter 0 which is also equivalent to 766 (decimal).

4080D

7.2.1.8 $AA8V

Name Select LED Data Origin command

Description Select whether LED will display data from either the host computer or the counter/frequency module directly.

Syntax **$AA8V(cr)**

$ is a delimiter character.

AA (range 00-FF) represents the 2-character hexadecimal address that you will access to.

8 is the Select LED Data Origin command.

V indicates the origin of the data which is to be displayed on the LED:

V=0 sets the LED data origin to the module's counter 0

V=1 sets the LED data origin to the module's counter 1

V=2 sets the LED data origin to the host computer

(cr) is the terminating character, carriage return (0Dh)

Response **!AA(cr)** if the command is valid.

?AA(cr) if an invalid operation was entered.

There is no response if the module detects a syntax or communication error, or even if the specified address does not exist.

! is a delimiter character which indicates a valid command.

? is a delimiter character which indicates an invalid command.

AA (range 00-FF) represents the 2-character hexadecimal address of the module.

(cr) is the terminating character, carriage return (0Dh).

Example command: $0182(cr)

response: !01(cr)

The command sets the counter/frequency modules at address 01 to display data sent by the host computer. After this command has been issued, the host computer can use command $AA9(data) to send the data to the module.

4080D

7.2.1.9 $AA8

Name Read LED Data Origin command

Description Read the LED Data Origin status which determines whether LED will display data from either the host computer or the counter/frequency module directly.

Syntax **$AA8(cr)**

$ is a delimiter character.

AA (range 00-FF) represents the 2-character hexadecimal address that you will access to.

8 is the Read LED Data Origin command.

(cr) is the terminating character, carriage return (0Dh)

Response **!AAV(cr)** if the command is valid.

?AA(cr) if an invalid operation was entered.

There is no response if the module detects a syntax or communication error, or even if the specified address does not exist.

! is a delimiter character which indicates a valid command.

? is a delimiter character which indicates an invalid command.

AA (range 00-FF) represents the 2-character hexadecimal address of the module.

V indicates the origin of the data to be displayed on the LED:

V=0 sets the LED data origin to the module's counter 0

V=1 sets the LED data origin to the module's counter 1

V=2 sets the LED data origin to the host computer

(cr) is the terminating character, carriage return (0Dh).

Example command: $018(cr)

response: !011(cr)

The command requests the counter/frequency module at address 01 to return its LED Data Origin status. The module replies that it currently displays data from counter 1.

4080D

7.2.1.10 $AA9(data)

Name Send Data to LED command

Description The host computer sends data to the addressed module to display on its LED.

Syntax **$AA9(data)(cr)**

$ is a delimiter character.

AA (range 00-FF) represents the 2-character hexadecimal address that you will access to.

9 is the Send LED Data command.

(data) is a floating point numeral consisting of five digits, and there can be a decimal point. Its maximum value is 99999.

(cr) is the terminating character, carriage return (0Dh)

Response **!AA(cr)** if the command is valid.

?AA(cr) if an invalid operation was entered.

There is no response if the module detects a syntax or communication error, or even if the specified address does not exist.

! is a delimiter character which indicates a valid command.

? is a delimiter character which indicates an invalid command.

AA (range 00-FF) represents the 2-character hexadecimal address of a counter/frequency module.

(cr) is the terminating character, carriage return (0Dh).

Example command: $0198999.9(cr)

response: !01(cr)

The command requests the host computer to send 8999.9 to the counter/frequency module at address 01 for LED display. This command is only valid after the command $0182 has been issued.

7.2.2 Counter Setup Command Set

Command Syntax	Command Name	Description	I/O Module
$AAAG	Set Gate Mode	Requests the specified counter/ frequency module to set its gate mode to either high, low or disabled	4080, 4080D
$AAA	Read Gate Mode	Requests the specified counter/ frequency module to return the sta-tus of its gate mode	4080, 4080D
$AA3N(data)	Set Maximum Counter Value	Sets the maximum value of counter 0 or counter 1 for the speci-fied counter/frequency module	4080, 4080D
$AA3N	Read Maximum Counter Value	Reads the maximum value of counter 0 or counter 1 of the speci-fied counte/ frequency module	4080, 4080D
$AA5NS	Start/Stop Counter	The command orders the specified counter/frequency module to start or stop counting	4080, 4080D
$AA5N	Read Counter Start/Stop Status	The addressed counter frequency module returns its status indicating whether counting is enabled or dia-bled	4080, 4080D
$AA6N	Clear Counter	The command clears the counter 0 or counter 1 of the specified counter module	4080, 4080D
$AA7N	Read Overflow Flag	The addressed module returns the status of the overflow flag of counter 0 or counter 1	4080, 4080D

4080, 4080D

7.2.2.1 $AAAG

Name Set Gate Mode command

Description Request the specified counter/frequency module to set its gate to one of the three states, high, low or disabled.

Syntax **$AAAG(cr)**

$ is a delimiter character.

AA (range 00-FF) represents the 2-character hexadecimal address that you will access to.

A is the Gate Mode command.

G determines the gate mode:

G = 0 the gate is low

G = 1 the gate is high

G = 2 the gate is disabled

(cr) is the terminating character, carriage return (0Dh).

Response **!AA(cr)** if the command is valid.

There is no response if the module detects a syntax or communication error, or even if the specified address does not exist.

! is a delimiter character which indicates a valid command.

AA (range 00-FF) represents the 2-character hexadecimal address of the module.

(cr) is the terminating character, carriage return (0Dh).

Example command: $01A1(cr)

response: !01(cr)

The command requests the counter/frequency module at address 01 to set its gate high. The module will reply with an address indicating that it has executed the command.

4080, 4080D

7.2.2.2 $AAA

Name Read Gate Mode command

Description Request the specified counter/frequency module to return its gate status.

Syntax **$AAA(cr)**

$ is a delimiter character.

AA (range 00-FF) represents the 2-character hexadecimal address that you will access to.

A is the Read Gate Mode command.

(cr) is the terminating character, carriage return (0Dh).

Response **!AAG(cr)** if the command is valid.

There is no response if the module detects a syntax or communication error, or even if the specified address does not exist.

! is a delimiter character which indicates a valid command.

AA (range 00-FF) represents the 2-character hexadecimal address of the module.

G determines the gate mode.

G = 0 the gate is low

G = 1 the gate is high

G = 2 the gate is disabled.

(cr) is the terminating character, carriage return (0Dh).

Example command: $01A(cr)

response: !011(cr)

The command requests the counter/frequency module to return its gate status. The module at address 01 replies with gate setting high.

4080, 4080D

7.2.2.3 $AA3N(data)

Name Set Maximum Counter Value command

Description Set the maximum value for either counter 0 or counter 1 of a specified counter/frequency module.

Syntax **$AA3N(data)(cr)**

$ is a delimiter character.

AA (range 00-FF) represents the 2-character hexadecimal address that you will access to.

3 is the Set Maximum Counter Value command.

N determines the counter for which the maximum counter value is to be set.

N = 0 represents counter 0

N = 1 represents counter 1

(data) is the maximum count value which consists of eight hexadecimal digits. The module will accumulate the input counts until it reaches the maximum value. When the count exceeds the maximum counter value, the counter will stop counting. The programmer should use the command $AA6N to reset the counter to 1.

(cr) is the terminating character, carriage return (0Dh).

Response **!AA(cr)** if the command is valid.

?AA(cr) if an invalid operation was entered.

There is no response if the module detects a syntax or communication error, or even if the specified address does not exist.

! is a delimiter character which indicates a valid command.

? is a delimiter character which indicates an invalid command.

AA (range 00-FF) represents the 2-character hexadecimal address of the module.

(cr) is the terminating character, carriage return (0Dh).

Example command: $24300000ffff(cr)

response: !24(cr)

The command requests the counter/frequency module at address 24 to set the maximum value for counter 0 to 65535 (0x0000ffff). The module will reply that it has executed the command.

4080, 4080D

7.2.2.4 $AA3N

Name Read Maximum Counter Value command

Description Read the maximum value of counter 0 or counter 1 for a specified counter/frequency module.

Syntax **$AA3N(cr)**

$ is a delimiter character.

AA (range 00-FF) represents the 2-character hexadecimal address that you will access to.

3 is the Read Maximum Counter Value command.

N determines the counter for which the maximum counter value is to be set.

N = 0 represents counter 0

N = 1 represents counter 1

(cr) is the terminating character, carriage return (0Dh).

Response **!AA(data)(cr)** if the command is valid.

?AA(cr) if an invalid operation was entered.

There is no response if the module detects a syntax or communication error, or even if the specified address does not exist.

! is a delimiter character which indicates a valid command.

? is a delimiter character which indicates an invalid command. AA (range 00-FF) represents the 2-character hexadecimal address of the module.

(data) is the maximum counter value which consists of eight hexadecimal digitals.

(cr) is the terminating character, carriage return (0Dh).

Example command: $2430(cr)

response: !240000ffff(cr)

The command requests the counter/frequency module at address 24 for the maximum number of counter 0. The module replies the maximum count number of channel 0 with 65535 (0000ffff)

4080, 4080D

7.2.2.5 $AA5NS

Name Start/Stop Counter command

Description Request the counter/frequency module to start or stop the counting for either counter 0 or counter 1.

Syntax **$AA5NS(cr)**

$ is a delimiter character.

AA (range 00-FF) represents the 2-character hexadecimal address that you will access to.

5 is the Start/Stop Counter command.

N determines the counter that should be either enabled or disabled.

N = 0 represents counter 0

N = 1 represents counter 1

S represents the counter status.

S = 0 stops counting

S = 1 starts counting

(cr) is the terminating character, carriage return (0Dh).

Response **!AA(cr)** if the command is valid. There is no response if the module detects a syntax or communication error, or even if the specified address does not exist.

! is a delimiter character which indicates a valid command.

AA (range 00-FF) represents the 2-character hexadecimal address of a counter input module.

(cr) is the terminating character, carriage return (0Dh).

Example command: $06501(cr)

response: !06(cr)

The command requests the counter 0 of counter/frequency module at address 06 to start. The addressed module replies with its address indicating that the command has been executed. Counter 0 has started.

4080, 4080D

7.2.2.6 $AA5N

Name Read Counter Start/Stop Status command

Description Requests the addressed counter/frequency module to indicate whether counter 0 or counter 1 is active.

Syntax **$AA5N(cr)**

$ is a delimiter character.

AA (range 00-FF) represents the 2-character hexadecimal address that you will access to.

5 is the Read Counter Start/Stop Status command.

N determines the counter for which the status should be returned.

N = 0 represents counter 0

N = 1 represents counter 1

(cr) is the terminating character, carriage return (0Dh).

Response **!AAS(cr)** if the command is valid.

There is no response if the module detects a syntax or communication error, or even if the specified address does not exist.

! is a delimiter character which indicates a valid command.

AA (range 00-FF) represents the 2-character hexadecimal address of the module.

S represents the counter status.

S = 1 indicates the status is counting

S = 0 indicates the status is not counting

(cr) is the terminating character, carriage return (0Dh).

Example command: $0650(cr)

response: !061(cr)

The command requests the counter/frequency module at address 06 to return the status of counter 0. The module replies that the counter 0 is in the counting process.

4080, 4080D

7.2.2.7 $AA6N

Name Clear Counter command

Description Clears the counter 0 or counter 1 of the specified counter/frequency module.

Syntax **$AA6N(cr)**

$ is a delimiter character.

AA (range 00-FF) represents the 2-character hexadecimal address that you will access to.

6 is the Clear Counter command.

N determines the counter which should be cleared.

N = 0 represents counter 0

N = 1 represents counter 1

(cr) is the terminating character, carriage return (0Dh).

Response **!AA(cr)** if the command is valid.

There is no response if the module detects a syntax or communication error, or even if the specified address does not exist.

! is a delimiter character which indicates a valid command.

AA (range 00-FF) represents the 2-character hexadecimal address of the module.

(cr) is the terminating character, carriage return (0Dh).

Example command: $1361(cr)

response: !13(cr)

The command requests the counter/frequency module at address 13 to clear counter 1. The module replies with its address indicating that the counter has been cleared.

4080, 4080D

7.2.2.8 $AA7N

Name Read/Clear Overflow Flag command

Description The command requests the module to return the status of the overflow flag for either counter 0 or counter 1. Then clear the flag afterwards.

Syntax **$AA7N(cr)**

$ is a delimiter character.
AA (range 00-FF) represents the 2-character hexadecimal address that you will access to.
7 is the Read/Clear Overflow Flag command.
N determines the channel whose overflow flag status should be read and cleared. When N = 0, it represents counter 0. On the other hand, N = 1 represents counter 1
(cr) is the terminating character, carriage return (0Dh).

Response **!AAV(cr)** if the command is valid.
?AA(cr) if an invalid operation was entered.
There is no response if the module detects a syntax or communication error, or even if the specified address does not exist.
! is a delimiter character which indicates a valid command.
? is a delimiter character which indicates an invalid command .
AA (range 00-FF) represents the 2-character hexadecimal address of the module.
V represents the status of the Nth channel's overflow flag.
V = 1 means that the overflow flag has been set because the counting has exceeded the maximum count.
V = 0 means that the overflow flag has not been set.
(cr) is the terminating character, carriage return (0Dh).

Example command: $1371(cr)
response: !131(cr)
The command requests the counter/frequency module at address 13 to return the status of the overflow flag for counter 1 and to reset it. The module replies with the overflow flag for counter 1indicating overflow. Then it is being reset.

7.2.3 Digital Filter and Programmable Threshold Command Set

Command Syntax	Command Name	Description	I/O Module
$AA4S	Enable/Disable Digital Filter	Enables or disables the digital filter of the addressed counter/frequency module	4080, 4080D
$AA4	Read Filter Status	The addressed counter frequency module returns the status of its digital filter	4080, 4080D
$AA0H(data)	Set Minimum Input Signal Width at High Level	Sets the minimum input signal width at high level for a specified counter/frequency module	4080, 4080D
$AA0H	Read Minimum Input Signal Width at High Level	Reads the minimum input signal width setting at high level for a specified counter/frequency module	4080, 4080D
$AA0L(data)	Set Minimum Input Signal Width at Low Level	Sets the minimum input signal width at low level for a specified counter/frequency module	4080, 4080D
$AA0L	Read Minimum Input Signal Width at Low Level	Reads minimum input signal width setting at low level for a specified counter/frequency module	4080, 4080D
$AA1H(data)	Set Non-isolated High Trigger Level	Sets the high trigger level of non-solated input signals for a specified counter/frequency module	4080D
$AA1H	Read Non-isolated High Trigger Level	Requests the addressed counter frequency module to return the high trigger level for non-isolated input signals	4080D
$AA1L(data)	Set Non-isolated Low Trigger Level	Sets the low trigger level of non-solated input signals for a specified counter/frequency module	4080D
$AA1L	Read Non-isolated Low Trigger Level	Requests the addressed ounter/ frequency module to return the low trigger level for non-isolated input signals	4080D

4080, 4080D

7.2.3.1 $AA4S

Name Enable/Disable Digital Filter command

Description Enables or disables the digital filter of the counter/ frequency module.

Syntax **$AA4S(cr)**

$ is a delimiter character.

AA (range 00-FF) represents the 2-character hexadecimal address that you will access to.

4 is the Enable/Disable Filter command.

S is the digital filter mode.

S = 0 means disable filter

S = 1 means enable filter

(cr) is the terminating character, carriage return (0Dh).

Response **!AA(cr)** if the command is valid.

There is no response if the module detects a syntax or communication error, or even if the specified address does not exist.

! is a delimiter character which indicates a valid command.

AA (range 00-FF) represents the 2-character hexadecimal address of the module.

(cr) is the terminating character, carriage return (0Dh).

Example command: $0340(cr)

response: !03(cr)

The command orders the counter/frequency module at address 03 to disable its digital filter. The module returns its address indicating that it has executed the command successfully.

4080, 4080D

7.2.3.2 $AA4

Name Read Filter Status command

Description Read the digital filter status of the addressed counter/ frequency module.

Syntax **$AA4(cr)**

$ is a delimiter character.

AA (range 00-FF) represents the 2-character hexadecimal address that you will access to.

4 is the Read Filter Status command.

(cr) is the terminating character, carriage return (0Dh).

Response **!AAS(cr)** if the command is valid.

There is no response if the module detects a syntax or communication error, or even if the specified address does not exist.

! is a delimiter character which indicates an invalid command.

AA (range 00-FF) represents the 2-character hexadecimal address of the module.

S is the digital filter mode.

S = 0 means filter is disabled

S = 1 means filter is enabled

(cr) is the terminating character, carriage return (0Dh).

Example command: $034(cr)

response: !030(cr)

The command requests the counter/frequency module at address 03 to return whether its digital filter is ON or not. The module returns its address which indicates that its digital filter is disabled.

4080, 4080D

7.2.3.3 $AA0H(data)

Name Set Minimum Input Signal Width at High Level command

Description Set the minimum input signal width at high level for a specified counter/frequency module to filter the noise.

Syntax **$AA0H(data)(cr)**

$ is a delimiter character.

AA (range 00-FF) represents the 2-character hexadecimal address that you will access to.

0H is the Set Minimum Input Signal Width at High Level command.

(data) is the minimum width at high level. The unit is in µsec (microseconds) and its resolution is 1 µsec. The format is a five digit integer that can range from 2 µsec to 65535 µsec. Out of range values will cause errors.

(cr) is the terminating character, carriage return (0Dh).

Response **!AA(cr)** if the command is valid. The addressed module stores the value and will recognize the input signal “high” only after the input signal continues “high” and for longer than the specified value.

?AA(cr) if an invalid operation was entered.

There is no response if the module detects a syntax or communication error, or even if the specified address does not exist.

! is a delimiter character which indicates a valid command.

? is a delimiter character which indicates an invalid command.

AA (range 00-FF) represents the 2-character hexadecimal address of the module.

(cr) is the terminating character, carriage return (0Dh).

Example command: $130H00020(cr)

response: !13(cr)

The command requests the counter/frequency module at address 13 to set the minimum input width at high level to 20 ?sec. The module stores the value and will identify an input signal to be "high” only if the signal continues to be “high” longer than 20 ?sec. This function can be used as a digital filter.

4080, 4080D

7.2.3.4 $AA0H

Name Read Minimum Input Signal Width at High Level command

Description Read the minimum input signal width at high level for a specified counter/frequency module.

Syntax **$AA0H(cr)**

$ is a delimiter character.

AA (range 00-FF) represents the 2-character hexadecimal address that you will access to.

0H is the Read Minimum Input Signal Width at High Level command.

(cr) is the terminating character, carriage return (0Dh).

Response **!AA(data)(cr)** if the command is valid.

?AA(cr) if an invalid operation was entered.

There is no response if the module detects a syntax or communication error, or even if the specified address does not exist.

! is a delimiter character which indicates a valid command.

? is a delimiter character which indicates an invalid command.

AA (range 00-FF) represents the 2-character hexadecimal address of the module.

(data) is the minimum width at high level. The unit is in μsec (microseconds) and its resolution is 1 μsec. The format is a five digit integer that ranges from 2 μsec to 65535 μsec.

(cr) is the terminating character, carriage return (0Dh).

Example command: $130H(cr)

response: !1300020(cr)

The command requests the counter/frequency module at address 13 to read its minimum input signal width at high level. The module replies that its minimum input signal width at high level is 20 μsec.

4080, 4080D

7.2.3.5 $AA0L(data)

Name Set Minimum Input Signal Width at Low Level command

Description Set the minimum input signal width at low level for a specified counter/frequency module to filter noise.

Syntax **$AA0L(data)(cr)**

$ is a delimiter character.

AA (range 00-FF) represents the 2-character hexadecimal address that you will access to.

0L is the Set Minimum Input Signal Width at Low Level command.

(data) is the minimum width at low level. The unit is in µsec (microseconds) and its resolution is 1 µsec. The format is a five digit integer that can range from 2 µsec to 65535 µsec. Out of range values will cause errors.

(cr) is the terminating character, carriage return (0Dh).

Response **!AA(cr)** if the command is valid. The addressed module stores the value and will identify the input signal “low” only if the input signal continues to be “low” longer than the specified time.

?AA(cr) if an invalid operation was entered.

There is no response if the module detects a syntax or communication error, or even if the specified address does not exist.

! is a delimiter character which indicates a valid command.

? is a delimiter character which indicates an invalid command.

AA (range 00-FF) represents the 2-character hexadecimal address of the module.

(cr) is the terminating character, carriage return (0Dh).

Example command: $050L00084(cr)

response: !05(cr)

The command requests the counter/frequency module at address 05 to set the minimum input width at low level to 84 ?sec. The module stores the value and will identify an input signal to be "low” only if the signal continues to be “low” longer than 84 µsec. This function can be used as digital filter.

4080, 4080D

7.2.3.6 $AA0L

Name Read Minimum Input Signal Width at Low Level command

Description Read the minimum input signal width at low level for a specified counter/frequency module to filter noise.

Syntax **$AA0L(cr)**

$ is a delimiter character.

AA (range 00-FF) represents the 2-character hexadecimal address that you will access to.

0L is the Read Minimum Input Signal Width at Low Level command.

(cr) is the terminating character, carriage return (0Dh).

Response **!AA(data)(cr)** if the command is valid.

?AA(cr) if an invalid operation was entered.

There is no response if the module detects a syntax or communication error, or even if the specified address does not exist.

! is a delimiter character which indicates a valid command.

? is a delimiter character which indicates an invalid command.

AA (range 00-FF) represents the 2-character hexadecimal address of the module.

(data) is the minimum width at low level. The unit is in µsec (microsecond) and its resolution is 1 µsec. The format is a five digit integer that ranges from 2 µsec to 65535 µsec.

(cr) is the terminating character, carriage return (0Dh).

Example command: $050L(cr)

response: !0500084(cr)

The command requests the counter/frequency module at address 05 to read its minimum input signal width at low level. The module replies that its minimum input signal width at low level is 84 µsec.

4080D

7.2.3.7 $AA1H(data)

Name Set Non-isolated High Trigger Level command

Description Set the high trigger level for non-isolated input signals for a specified counter/frequency module.

Syntax **$AA1H(data)(cr)**

$ is a delimiter character.

AA (range 00-FF) represents the 2-character hexadecimal address that you will access to.

1H is the Set Non-isolated High Trigger Level command.

(data) is the high trigger level for non-isolated input

The unit and resolution are both 0.1 V (voltage). The format is a two digit integer that range from 1 to 50 (i.e. 0.1 to 5 V). This high trigger level must at all times be higher than the low trigger level which is set by the $AA1L(data) command. When the high trigger level is out of range or lower than the low trigger level, an error will occur.

(cr) is the terminating character, carriage return (0Dh).

Response **!AA(cr)** if the command is valid. The addressed module stores the value and will recognize input signal as “high” only when they exceed the high trigger level

?AA(cr) if an invalid operation was entered.

There is no response if the module detects a syntax or communication error, or even if the specified address does not exist.

! is a delimiter character which indicates a valid command.

? is a delimiter character which indicates an invalid command.

AA (range 00-FF) represents the 2-character hexadecimal address of the module.

(cr) is the terminating character, carriage return (0Dh).

Example command: $131H30(cr)

response: !13(cr)

The command requests the counter/frequency module at address 13 to set its non-isolated high trigger level to 3 V. The module stores the value and will identify the input signals to be “high” only after the signals exceed 3 V. This function can be used as a level filter.

4080, 4080D

7.2.3.8 $AA1H

Name Read Non-isolated High Trigger Level command

Description Read the high trigger level for non-isolated input signals of a specified counter/frequency module.

Syntax **$AA1H(cr)**

$ is a delimiter character.

AA (range 00-FF) represents the 2-character hexadecimal address that you will access to.

1H is the Read Non-isolated High Trigger Level command.

(cr) is the terminating character, carriage return (0Dh).

Response **!AA(data)(cr)** if the command is valid.

?AA(cr) if an invalid operation was entered.

There is no response if the module detects a syntax or communication error, or even if the specified address does not exist.

! is a delimiter character which indicates a valid command.

? is a delimiter character which indicates an invalid command.

AA (range 00-FF) represents the 2-character hexadecimal address of the module.

(data) is the high trigger level of non-isolated input signals The unit and resolution are both 0.1 V (voltage). The format is a two digit integer that range from 1 to 50 (i.e. 0.1 V to 5 V).

(cr) is the terminating character, carriage return (0Dh).

Example command: $131H(cr)

response: !1330(cr)

The command requests the counter/frequency module at address 13 to read its non-isolated high trigger level. The module replies that the high trigger level is 3 V.

4080, 4080D

7.2.3.9 $AA1L(data)

Name Set Non-isolated Low Trigger Level command

Description Set the low trigger level of non-isolated input signals for a specified counter/frequency module.

Syntax **$AA1L(data)(cr)**

$ is a delimiter character.

AA (range 00-FF) represents the 2-character hexadecimal address that you will access to.

1L is the Set Non-isolated Low Trigger Level command.

(data) is the low trigger level for non-isolated input signals. The unit and resolution is 0.1 V (voltage). The format is a two digit integer that can range from 1 to 50 (i.e. 0.1 to 5 V). This low trigger level must at all times be lower than the high trigger level, set by $AA1H(data) command. When the low trigger level is out of range or higher than the high trigger level an error will occur.

(cr) is the terminating character, carriage return (0Dh).

Response **!AA(cr)** if the command is valid. The addressed module stores the value and will identify input signal as “low” only when it exceeds the low trigger level

?AA(cr) if an invalid operation was entered.

There is no response if the module detects a syntax or communication error, or if the specified address does not exist.

! is a delimiter character which indicates a valid command.

? is a delimiter character which indicates an invalid command.

AA (range 00-FF) represents the 2-character hexadecimal address of the module.

(cr) is the terminating character, carriage return (0Dh).

Example command: $051L08(cr)

response: !05(cr)

The command requests the counter/frequency module at address 05 to set its non-isolated low trigger level to 0.8 V. The module stores the value and will identify the TTL input signal to be “low” only if the signal exceeds 0.8 V. This function can be used as a level filter.

4080, 4080D

7.2.3.10 $AA1L

Name Read Non-isolated Low Trigger Level command

Description Read the low trigger level for non-isolated input signals of a specified counter/frequency module.

Syntax **$AA1L(cr)**

$ is a delimiter character.

AA (range 00-FF) represents the 2-character hexadecimal address that you will access to.

1L is the Read Non-isolated Low Trigger Level command.

(cr) is the terminating character, carriage return (0Dh).

Response **!AA(data)(cr)** if the command is valid.

?AA(cr) if an invalid operation was entered.

There is no response if the module detects a syntax or communication error, or even if the specified address does not exist.

! is a delimiter character which indicates a valid command.

? is a delimiter character which indicates an invalid command.

AA (range 00-FF) represents the 2-character hexadecimal address of the module.

(data) is the low trigger level of non-isolated input signal. The unit and resolution is 0.1 V (voltage). The format is a two digit integer that can range from 1 to 50 (i.e. 0.1 V to 5 V).

(cr) is the terminating character, carriage return (0Dh).

Example command: $051L(cr)

response: !0508(cr)

The command requests the counter/frequency module at address 05 to read its non-isolated input signal low trigger level. The module replies that its low trigger level is 0.8 V.

7.2.4 Digital Output and Alarm Command Set

Command Syntax	Command Name	Description	I/O Module
@AAPN(data)	Set Initial Count Value of Counter N	Sets the initial count value of the module for counter 0 or counter 1	4080
@AAGN	Read Initial Count Value of Counter N	Read the initial count value of counter 0 or counter 1	4080
@AAEAN	Enable Alarm of Counter N	Enable alarm for the specified counter 0 or counter 1	4080
@AADAN	Disable Alarm of Counter N	Disable alarm for the specified counter 0 or counter 1	4080
@AAPA(data)	Set Alarm Limit Value of Counter 0	Download the alarm limit value for counter 0 of the specified module	4080
@AASA(data)	Set Alarm Limit Value of Counter 1	Download the alarm limit value for counter 1 of the specified module	4080
@AARP	Read Alarm Limit Value of Counter 0	Ask the module to return the alarm limit value of counter 0	4080
@AARA	Read Alarm Limit Value of Counter 1	Ask the module to return the alarm limit value of counter 1	4080
@AADO(data)	Set Digital Output Values	Set the values of the module's two digital outputs (ON or OFF)	4080, 4080D
@AADI	Read Digital Output and Alarm Status	Ask the addressed module to return the state of its two digital output channels and the status of its alarm	4080, 4080D
@AAEAT	Enable Alarm of Counter 0	Enable the alarm of counter 0 in either momentary or latching	4080D
@AADA	Disable Alarm of	Disable all alarm functions of	4080D
@AACA	Clear Latch Alarm	Both alarm states of the counter	4080D
@AAPA(data)	Set Low-Alarm Count Value of	Downloads the low-alarm count value for counter 0 of the speci-	4080D
@AASA(data)	Set High-Alarm Count Value of	Downloads the high-alarm count value for counter 0 of the speci-	4080D
@AARP	Read Low-Alarm Count Value of	Ask the module to return the low-alarm count value for coun-	4080D
@AARA	Read High-alarm Count Value for	Requests the addressed counter module to return its high-alarm	4080D

4080

7.2.4.1 @AAPN(data)

Name Set Initial Count Value of Counter 0 or 1 command

Description Set the initial count value for counter 0 or 1 of the specified counter module at address AA.

Syntax **@AAPN(data)(cr)**

@ is a delimiter character.

AA (range 00-FF) represents the 2-character hexadecimal address of the module.

PN is the Set Initial Count Value of Counter 0 or 1 command.

N = 0 represents counter 0

N = 1 represents counter 1

(data) is the initial count value which must consist of eight hexadecimal digits.

(cr) is the terminating character, carriage return (0Dh).

Response **!AA(cr)** if the command is valid.

There is no response if the module detects a syntax or communication error, or even if the specified address does not exist.

! is a delimiter character which indicates a valid command.

AA (range 00-FF) represents the 2-character hexadecimal address of the module.

(cr) is the terminating character, carriage return (0Dh).

Example command: @12P0000000FF(cr)

response: !12(cr)

The command sets the initial count value 000000FF for counter 0 of the counter module at address 12. The module replies that the command has been received.

4080

7.2.4.2 @AAGN

Name Read Initial Count Value of Counter 0 or 1 command

Description Read the initial count value of counter 0 or 1 of the specified counter module at address AA.

Syntax **@AAGN(data)(cr)**

@ is a delimiter character.

AA (range 00-FF) represents the 2-character hexadecimal address of the module.

GN is the Read Initial Count Value for Counter 0 or 1 command.

N = 0 represents counter 0

N = 1 represents counter 1

(cr) is the terminating character, carriage return (0Dh).

Response **!AA(data)(cr)** if the command is valid.

There is no response if the module detects a syntax or communication error, or even if the specified address does not exist.

! is a delimiter character which indicates a valid command.

AA (range 00-FF) represents the 2-character hexadecimal address of the module.

(data) is the initial count value which must consist of eight hexadecimal digits.

(cr) is the terminating character, carriage return (0Dh).

Example command: @12G0(cr)

response: !12000000FF(cr)

The command instructs the module at address 12h to return the initial value of counter 0. The module replies that initial count value of counter 0 is 000000FF.

4080

7.2.4.3 @AAEAN

Name Enable Alarm command

Description Enable Alarm for the specified counter.

Syntax **@AAEAN (cr)**

@ is a delimiter character.

AA (range 00-FF) represents the 2-character hexadecimal address of the module.

EAN is the Enable Alarm command.

N = 0 Represents counter 0

N = 1 Represents counter 1

(cr) is the terminating character, carriage return (0Dh).

Response **!AA(cr)** if the command is valid.

There is no response if the module detects a syntax or communication error, or even if the specified address does not exist.

! is a delimiter character which indicates a valid command.

AA (range 00-FF) represents the 2-character hexadecimal address of the module.

(cr) is the terminating character, carriage return (0Dh).

Example command: @12EA0(cr)

response: !12(cr)

The command sets the Alarm Status as ‘Enable’ for counter 0 of the counter module at address 12h. It means that the digital output will be triggered while the count value of the counter 0 reaches the alarm limit value. The module replies that the command has been received.

4080

7.2.4.4 @AADAN

Name Disable Alarm command

Description Disable Alarm for the specified counter.

Syntax **@AADAN (cr)**

@ is a delimiter character.

AA (range 00-FF) represents the 2-character hexadecimal address of the module.

DAN is the Disable Alarm Mode command.

N = 0 Represents counter 0

N = 1 Represents counter 1

(cr) is the terminating character, carriage return (0Dh).

Response **!AA(cr)** if the command is valid.

There is no response if the module detects a syntax or communication error, or even if the specified address does not exist.

! is a delimiter character which indicates a valid command.

AA (range 00-FF) represents the 2-character hexadecimal address of a counter module.

(cr) is the terminating character, carriage return (0Dh).

Example command: @12DA0(cr)

response: !12(cr)

The counter module at address 12h is instructed to disable the alarm functions for counter 0. The module confirms that its alarm functions have been disabled.

4080

7.2.4.5 @AAPA(data)
@AASA(data)

Name Set Alarm Limit Value of Counter 0 or 1 command

Description Set the Alarm limit value of counter 0 or 1 of the specified counter module at address AA.

Syntax **@AAPA(data)(cr)**
@AASA(data)(cr)
@ is a delimiter character.
AA (range 00-FF) represents the 2-character hexadecimal address of the module.
PA represents the Set Alarm Limit value for counter 0 command.
SA represents the Set Alarm Limit Value for counter 1 command.
(data) is the alarm limit value which must consist of eight hexadecimal digits.
(cr) is the terminating character, carriage return (0Dh).

Response **!AA(cr)** if the command is valid.
There is no response if the module detects a syntax or communication error, or even if the specified address does not exist.
! is a delimiter character which indicates a valid command.
AA (range 00-FF) represents the 2-character hexadecimal address of the module.
(cr) is the terminating character, carriage return (0Dh).

Example command: @$12PA0000FFFF(cr)
response: !12(cr)
The command sets the alarm limit value 0000FFFF for counter 0 of the counter module at address 12h. The module replies that the command has been received.

4080

7.2.4.6 @AARP @AARA

Name Read Alarm Limit Value of Counter 0 or 1 command

Description Read the alarm limit value of counter 0 or 1 of the specified counter module at address AA.

Syntax **@AARP(data)(cr)**
@AARA(data)(cr)
@ is a delimiter character.
AA (range 00-FF) represents the 2-character hexadecimal address of the module.
RP represents the Read Alarm Limit Value for counter 0 command.
RA represents the Read Alarm Limit Value for counter 1 command.
(cr) is the terminating character, carriage return (0Dh).

Response **!AA(data)(cr)** if the command is valid.
There is no response if the module detects a syntax or communication error, or even if the specified address does not exist.
! is a delimiter character which indicates a valid command.
AA (range 00-FF) represents the 2-character hexadecimal address of the module.
(data) is the alarm limit value which must consist of eight hexadecimal digits.
(cr) is the terminating character, carriage return (0Dh).

Example command: @12RP(cr)
response: !120000FFFF(cr)
The command instructs the module at address 12h to return the alarm limit value of counter 0. The module replies that the alarm limit value of counter 0 is 0000FFFF.

4080, 4080D

7.2.4.7 @AADO

Name Set Digital Output command

Description Set the values of the module's two digital outputs (ON or OFF).

Syntax **@AADO(data)(cr)**

@ is a delimiter character.

AA (range 00-FF) represents the 2-character hexadecimal address of the module.

DO is the Set Digital Output command.

(data) is the two-character parameter that sets the state for the two digital output bits of the module, as shown below:

00 all D/O bits are OFF

01 bit 0 is ON, bit 1 is OFF

02 bit 0 is OFF, bit 1 is ON

03 all bits are ON

(cr) represents terminating character, carriage return (0Dh).

Response **!AA(cr)** if the command was valid

?AA(cr) if an invalid parameter was entered

There is no response if the module detects a syntax or communication error, or even if the specified address does not exists.

! is a delimiter character which indicates a valid command.

? is a delimiter character which indicates an invalid command.

AA represents the 2-character hexadecimal address of the module.

(cr) represents terminating character, carriage return (0Dh).

Example command: @05DO01(cr)

response: !05(cr)

The counter module at address 05h is instructed to set digital output channel 1 to ON and digital output channel 2 to OFF. The module confirms the settings.

4080, 4080D

7.2.4.8 @AADI

Name Read Digital Output and Alarm State command

Description The addressed counter module is instructed to return the value of its two digital output channels and the state of its alarm.

Syntax **@AADI(cr)**

@ is a delimiter character.

AA (range 00-FF) represents the 2-character hexadecimal address of the module.

DI is the Read Digital Output and Alarm Status command.

(cr) represents terminating character, carriage return (0Dh).

Response **!AASOO00(cr)** if the command was valid

There is no response if the module detects a syntax error or communication error or if the specified address does not exists.

! is a delimiter character which indicates a valid command.

AA represents the 2-character hexadecimal address of the module.

S (for ADAM-4080) is a hexadecimal number that represents the disable or enable status of alarm mode:

0h: Counter 0 alarm is disabled, counter 1 alarm is disabled

1h: Counter 0 alarm is enabled, counter 1 alarm is disabled

2h: Counter 0 alarm is disabled, counter 1 alarm is enabled

3h: Counter 0 alarm is enabled, counter 1 alarm is enabled

S (for ADAM-4080D) is a hexadecimal number that represents the alarm state of counter 0:

0h: Alarm of counter 0 is disabled

1h: Alarm of counter 0 is in MOMENTARY mode

2h: Alarm of counter 0 is in LATCH mode

OO is a hexadecimal number representing the Digital Output port's channel 0 and 1 status (00h = D/0 channels 0 and 1 are both OFF, 01h = channel 0 is ON, channel 1 is OFF, 02h = channel 0 is OFF, channel 1 is ON, 03h = channel 0 and 1 are both ON).

(cr) represents the terminating character, carriage return (0Dh).

Example command: @15DI(cr)

response: !1510000(cr)

The counter module at address 15h is instructed to return digital output data and alarm status. The module responds that both digital output channels are OFF and alarm state is MOMENTARY.

command: @05DI(cr)

response: !0530000(cr)
The counter module at address 05H is instructed to return digital output and alarm status. The module responds that both digital output channels are OFF and the alarm status for both counters are ENABLED.

4080D

7.2.4.9 @AAEAT

Name Enable Alarm command

Description The counter module is instructed to enable its alarm for counter 0 in either Latching or Momentary mode.

Syntax **@AAEAT(cr)**
@ is a delimiter character.
AA (range 00-FF) represents the 2-character hexadecimal address of the module.
EA is the Enable Alarm command.
T indicates the alarm type and can have the value M = Momentary alarm state, or L = Latching alarm state.
(cr) represents terminating character, carriage return (0Dh).

Response **!AA(cr)** if the command was valid
There is no response if the module detects a syntax or communication error, or even if the specified address does not exist.
! is a delimiter character which indicates a valid command.
AA represents the 2-character hexadecimal address of the module.
(cr) represents terminating character, carriage return (0Dh)

Example command: @03EAL(cr)
response: !03(cr)
The counter module at address 03h is instructed to enable its alarm for counter 0 in Latching mode.
The module confirms that the command has been received.

Caution! *A counter module requires a maximum of two seconds after it has received an Enable Alarm command to let the settings take effect. During this time, the module can not be addressed to perform any other actions.*

4080D

7.2.4.10 @AADA

Name Disable Alarm command

Description Disable all alarm functions for counter 0 of the addressed counter module.

Syntax **@AADA(cr)**

@ is a delimiter character.

AA (range 00-FF) represents the 2-character hexadecimal address of the module.

DA is the Disable Alarm command.

(cr) represents terminating character, carriage return (0Dh).

Response **!AA(cr)** if the command was valid.

There is no response if the module detects a syntax or communication error, or even if the specified address does not exist.

! is a delimiter character which indicates a valid command.

AA represents the 2-character hexadecimal address of the module.

(cr) represents terminating character, carriage return (0Dh).

Example command: @07DA(cr)

response: !07(cr)

The counter module at address 07h is instructed to disable all alarm functions for channel 0. The module confirms by disabling the alarm functions.

Caution! *A counter module requires a maximum of two seconds after it has received a Disable Alarm command before the settings take effect. During this interval, the module cannot be addressed to perform any other actions.*

4080D

7.2.4.11 @AACA

Name Clear Latch Alarm command

Description Both alarm states (High and Low) of the addressed counter module are set to OFF, no alarm.

Syntax **@AACA(cr)**

@ is a delimiter character.

AA (range 00-FF) represents the 2-character hexadecimal address of the module.

CA is the Clear Latch Alarm command.

(cr) represents terminating character, carriage return (0Dh).

Response **!AA(cr)** if the command was valid.

There is no response if the module detects a syntax or communication error, or even if the specified address does not exist.

! is a delimiter character which indicates a valid command.

AA represents the 2-character hexadecimal address of the module.

(cr) represents terminating character, carriage return (0Dh).

Example command: @05CA(cr)

response: !05(cr)

The counter module at address 05h is instructed to set both alarm states (High and Low) to OFF. The module confirms that it has done so.

4080D

7.2.4.12 @AAPA(data)

Name Set Low-alarm Count Value for Counter 0 command

Description Set the low-alarm count value for counter 0 of the specified counter module.

Syntax **@AAPA(data)(cr)**

@ is a delimiter character.

AA (range 00-FF) represents the 2-character hexadecimal address of the module.

PA is the Set Low-alarm Count Value for Counter 0 command.

(data) is the low-alarm count value which must consist of eight hexadecimal digits. This value should be lower than the high alarm value.

(cr) is the terminating character, carriage return (0Dh).

Response **!AA(cr)** if the command is valid.

There is no response if the module detects a syntax or communication error, or even if the specified address does not exist.

! is a delimiter character which indicates a valid command

AA (range 00-FF) represents the 2-character hexadecimal address of the module.

(cr) is the terminating character, carriage return (0Dh).

Example command: @12PA0000FFFF(cr)

response: !12(cr)

The command sets the low-alarm count number 0000FFFF(hex) for channel 0 of the counter modules at address 12. The addressed module replies that the command has been received.

4080D

7.2.4.13 @AASA(data)

Name Set Hi-alarm Count Value of Counter 0 command

Description Set the high-alarm count value for counter 0 of the specified counter module.

Syntax **@AASA(data)(cr)**

@ is a delimiter character.

AA (range 00-FF) represents the 2-character hexadecimal address of the module.

SA is the Set High-alarm Count Value of Counter 0 command.

(data) is the high-alarm count value which must consist of eight hexadecimal digits. This value should be higher than the low-alarm count value.

(cr) is the terminating character, carriage return (0Dh).

Response !AA(cr) if the command is valid.

There is no response if the module detects a syntax or communication error, or even if the specified address does not exist.

! is a delimiter character which indicates a valid command.

AA (range 00-FF) represents the 2-character hexadecimal address of the module.

(cr) is the terminating character, carriage return (0Dh).

Example command: @12SAF0000000(cr)

response: !12(cr)

The command sets the low-alarm count number F0000000(hex) for channel 0 of the counter modules at address 12. The addressed module replies that the command has been received.

4080D

7.2.4.14 @AARP

Name	Read Low-alarm Count Value of Counter 0 command
Description	Read the low-alarm value of counter 0 of the specified counter module.
Syntax	@AARP(cr) @ is a delimiter character. AA (range 00-FF) represents the 2-character hexadecimal address of the module. RP is the Read Low-alarm Count Value of Counter 0 command. (cr) is the terminating character, carriage return (0Dh).
Response	**!AA(data)(cr)** if the command is valid. There is no response if the module detects a syntax or communication error, or even if the specified address does not exist. **!** is a delimiter character indicating a valid command **AA** (range 00-FF) represents the 2-character hexadecimal address of the module. (data) is the low-alarm count value which consists of eight hexadecimal digits. (cr) is the terminating character, carriage return (0Dh).
Example	command: @12RP(cr) response: !120000FFFF(cr) The command instructs the module at address 12 to return its low-alarm count value. The module replies that counter 0's low-alarm count value is 0000FFFF(hex).

4080D

7.2.4.15 @AARA

Name	Read High-alarm Count Value for Counter 0
Description	Requests the addressed counter module to return its high-alarm count value of counter 0.
Syntax	**@AARA(cr)** **@** is a delimiter character. **AA** (range 00-FF) represents the 2-character hexadecimal address of the module. **RA** is the Read High-alarm Count Value for Counter 0 command. **(cr)** is the terminating character, carriage return (0Dh).
Response	**!AA(data)(cr)** if the command is valid. There is no response if the module detects a syntax or communication error, or even if the specified address does not exist. **!** is a delimiter character which indicates a valid command **AA** (range 00-FF) represents the 2-character hexadecimal address of the module. **(data)** is the high-alarm count value which consists of eight hexadecimal digits. **(cr)** is the terminating character, carriage return (0Dh).
Example	command: @12RA(cr) response: !12F0000000(cr) The command instructs the module at address 12 to return its high-alarm count value. The module replies that counter 0's high-alarm count value is F0000000(hex).

Chapter 8

Calibration

Analog input/output modules are calibrated when you receive them. However, calibration is sometimes required. No screwdriver is necessary because calibration is done in software. Calibration parameters are stored in the ADAM module's onboard EEPROM.

The ADAM modules come with utility software that supports the calibration of analog input and analog output. Aside from the calibration that is carried out through software, the modules incorporate automatic Zero Calibration and automatic Span Calibration at boot-up or reset.

8.1 Analog Input Module Calibration

Models: ADAM-4011, 4011D, 4012, 4016, 4017, 4017+, 4018, 4018+, 4018M, 4019+

1. Set modules as initial mode before applying power to the module and let it warm up for about 30 minutes
2. Assure that the module is correctly installed and is properly configured for the input range that you want to calibrate. You can do this by using the ADAM utility software. (Please refer to Appendix D, Utility Software.)
3. Use a precise voltage source to calibrate the module through +IN and -IN terminals for ADAM-4011, 4011D and 4012. However, for ADAM-4016, the calibrating voltage should be applied to terminals Vin+ and Vin- (or Iin+ and Iin-). At last, Vin0+ and Vin0- are used for calibration in ADAM-4017, 4017+, 4018, 4018+, 4018M, 4019 and 4019+ models.

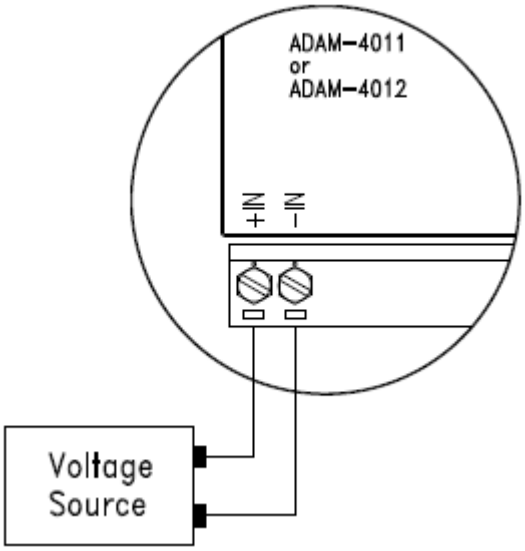

Figure 8.1 Applying Calibration Voltage

4. Execute the Offset Calibration command. This is also done through the ADAM utility software. (Please see “Offset Calibration” option in the Calibration sub-menu of the ADAM utility software).

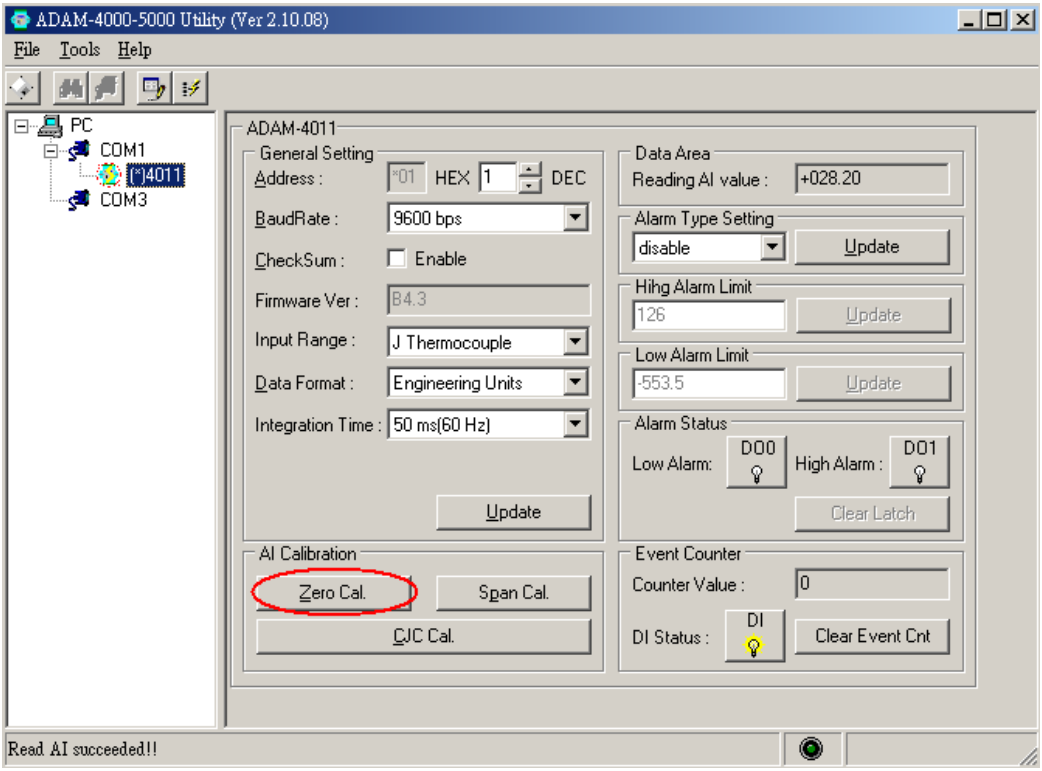

Figure 8.2 Zero Calibration

5. Execute the Span Calibration command. This can be done through the ADAM utility software. (Please see “Span Calibration” option in the Calibration sub-menu of the ADAM utility software).

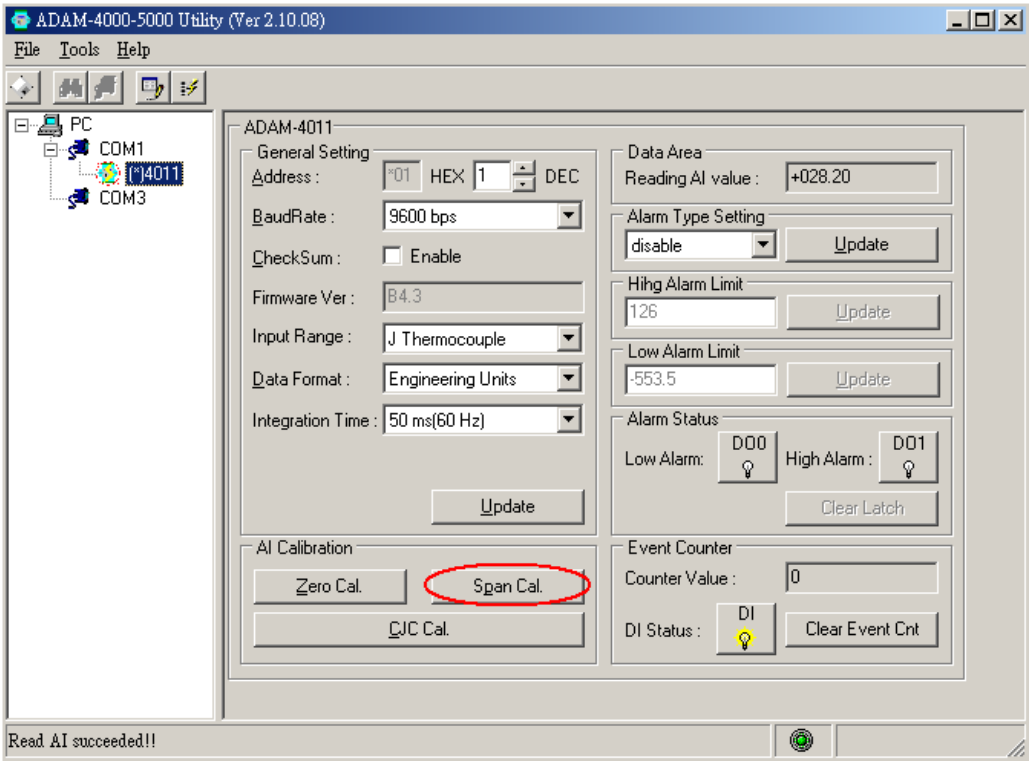

Figure 8.3 Span Calibration

6. This step is only for ADAM 4011, 4011D, 4018, 4018+, 4018M, 4019, 4019+. Execute the CJC (cold junction sensor) calibration command. This is also done through the ADAM utility software. (Please see “CJC Calibration” option in the Calibration sub-menu of the ADAM utility software).

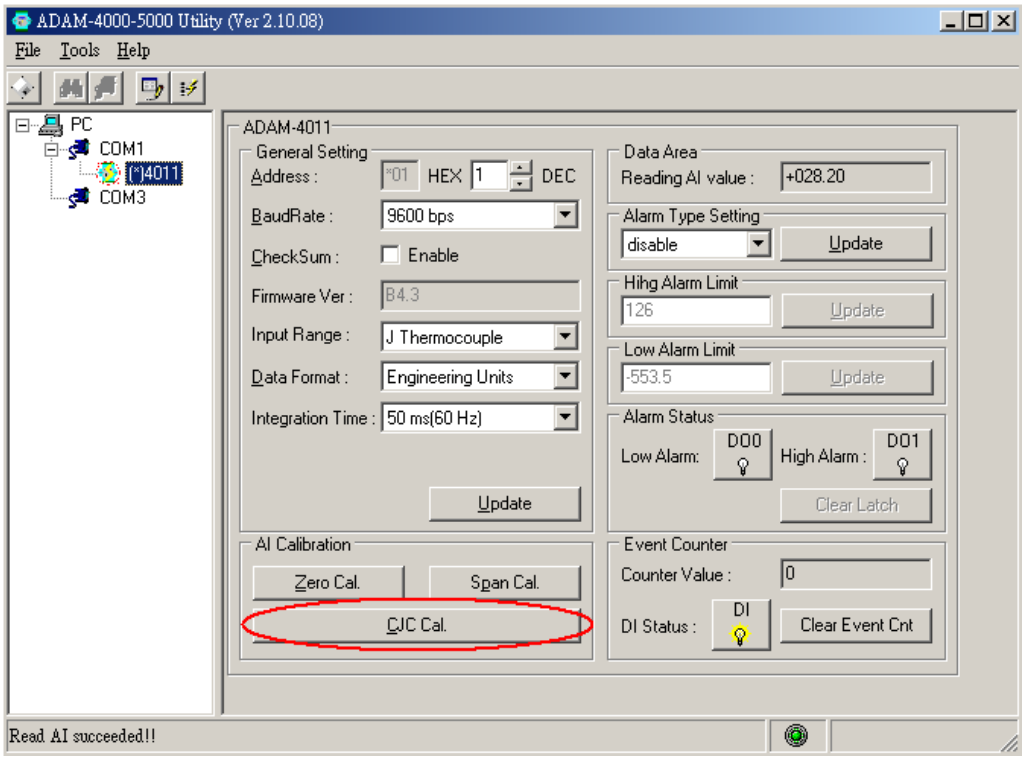

Figure 8.4 Cold Junction Calibration

8.2 Analog Input Resistance Calibration

Model: ADAM-4013

1. Apply power to the module and let it warm up for about 30 minutes.
2. Assure that the module is correctly installed and is properly configured for the input range that you want to calibrate. You can do this by using the ADAM utility software. (Please refer to Appendix D, Utility Software.)
3. Apply the reference Span resistance to the screw terminals using a 4-wire connection. Please refer to Figure 8-5 for the correct wiring diagram and Table 8-2 for the right Span calibration resistance).

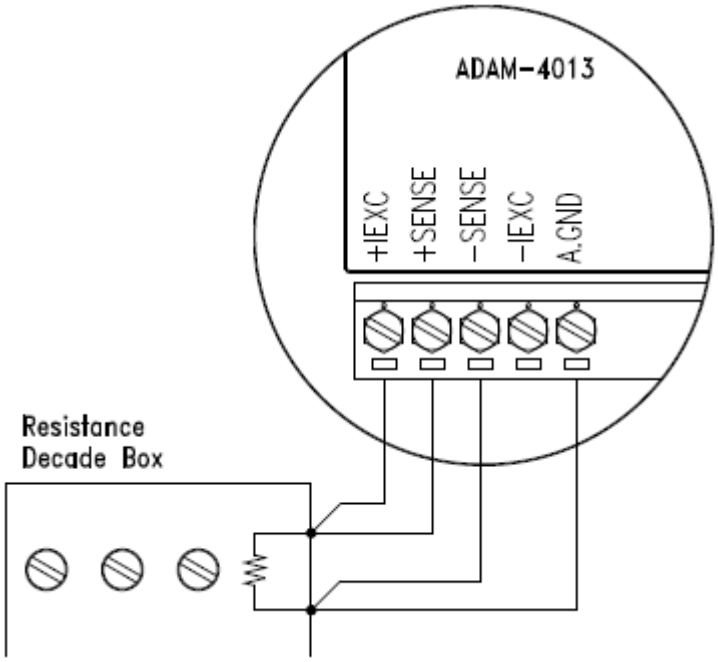

Figure 8.5 Applying calibration resistance

Use a precision resistance decade box or discrete resistors with values:

10 W, 15 W, 60 W, 140 W, 200 W and 440 W.

4. Apply the reference Offset resistance to the terminals of the module. (Please refer to Figure 8.5 for the correct wiring diagram and Table 8.2 for the right Offset calibration resistance.)
5. Issue an Offset Calibration command to the module. This can be done by using the Calibrate option in the ADAM utility software (Please see Appendix D, Utility Software)
6. Issue a Span Calibration command to the module. This can be done through the Calibrate option in the ADAM utility software (Please see Appendix D, Utility Software)

Table 8.1: Calibration Resistance				
Module	**Input Range Code (Hex)**	**Input Range**	**Span Calibration Resistance**	**Offset Calibration Resistance**
4013 2	0	Pt, -100~100 °C a = 0.00385	140 Ω 60	Ω
	21	Pt, 0~100 °C a = 0.00385	140 Ω 60	Ω
	22	Pt, 0~200 °C a = 0.00385	200 Ω 60	Ω
	23	Pt, 0~600 °C a = 0.00385	440 Ω 60	Ω
	24	Pt, -100~100 °C a = 0.003916	140 Ω 60	Ω
	25	Pt, 0~100 °C a = 0.003916	140 Ω 60	Ω
	26	Pt, 0~200 °C a = 0.003916	200 Ω 60	Ω
	27	Pt, 0~200 °C a = 0.003916	440 Ω 60	Ω
	28	Ni, -80~100 °C	200 Ω 60	Ω
	29	Ni, 0~100 °C	200 Ω 60	Ω

8.3 Analog Input Thermistor module Calibration

Model: ADAM-4015T

If you select the range “Thermistor 3K 0~100C”, please follow the calibration steps as below.

1. Short the INIT* pin to GND and then power up ADAM-4015T. Run ADAM-4000-5000 Utility and search for the module.

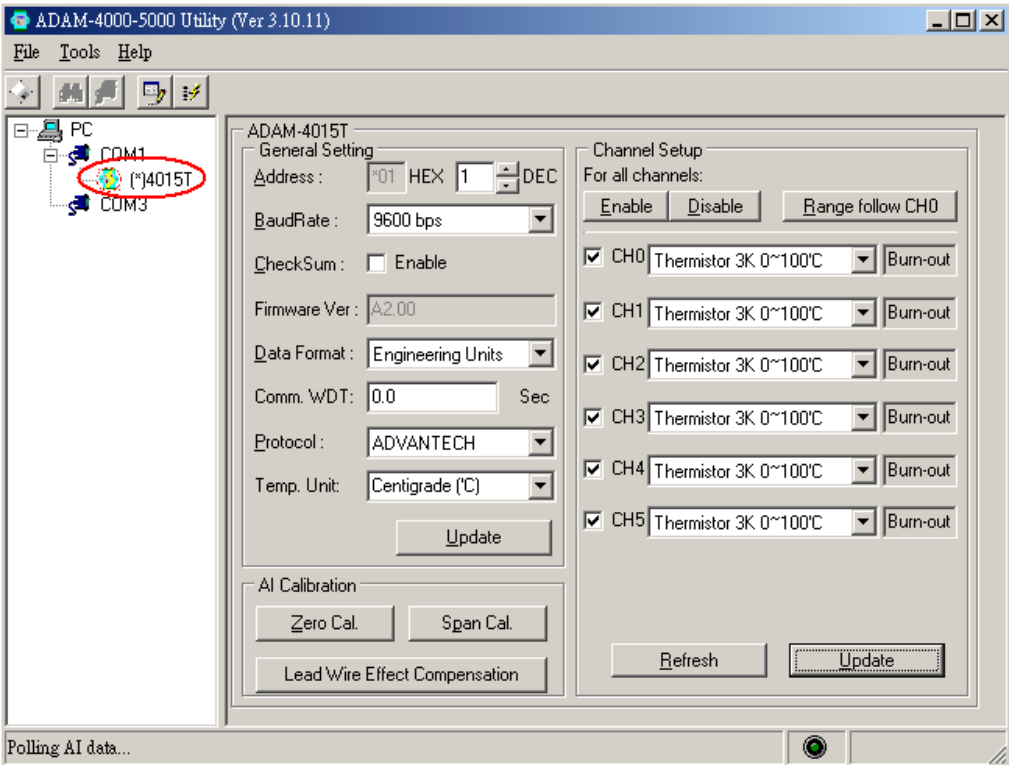

2. Click on “Lead Wire Effect Compensation”.

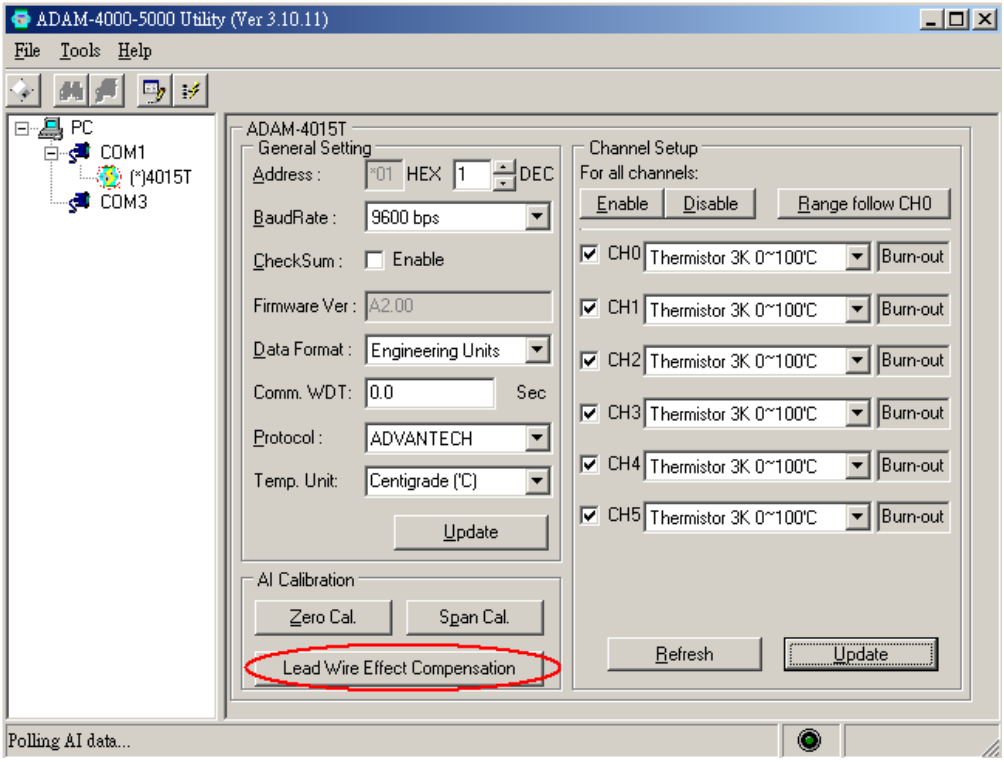

3. Set the resistance to “0” and click on “Save”

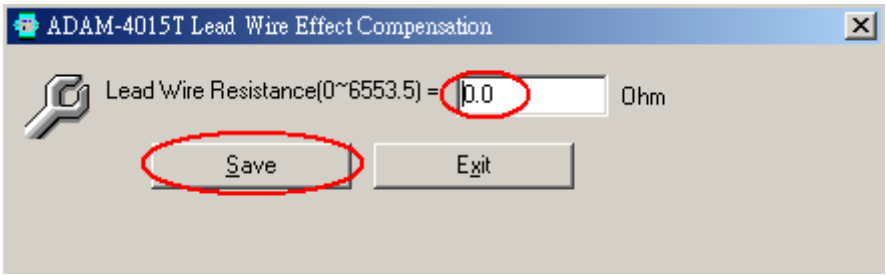

4. Click on “Zero Cal.”

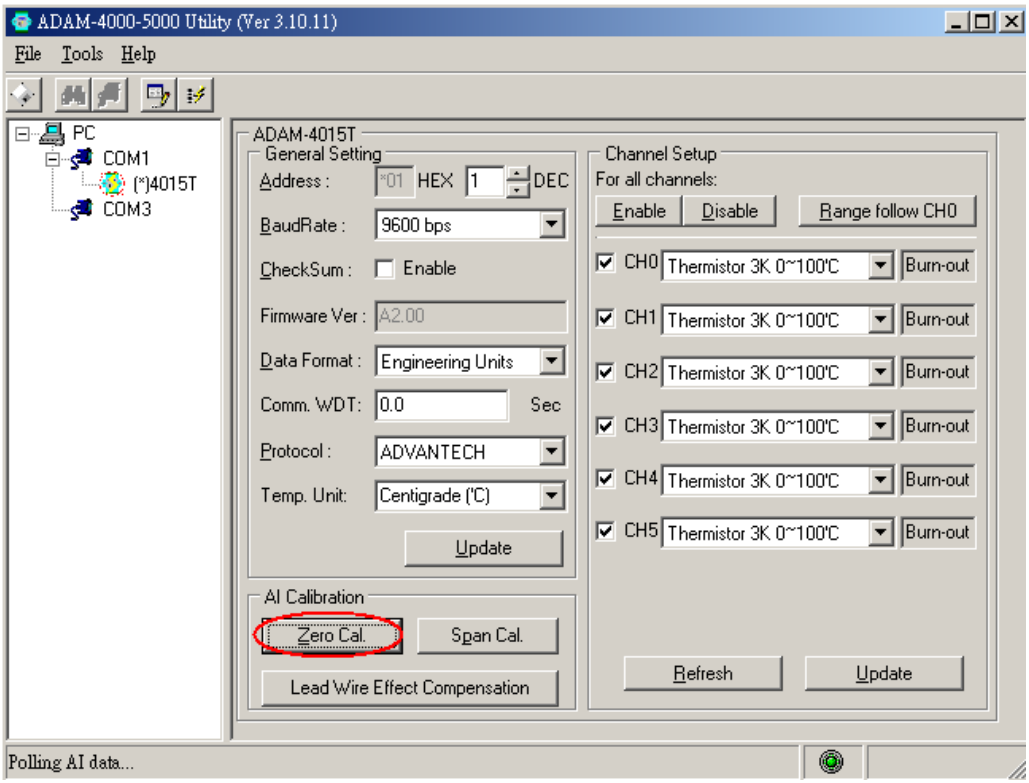

5. Apply 200.0 ohms resistor with 0.01% accuracy to CH0 and then click on “Save”.

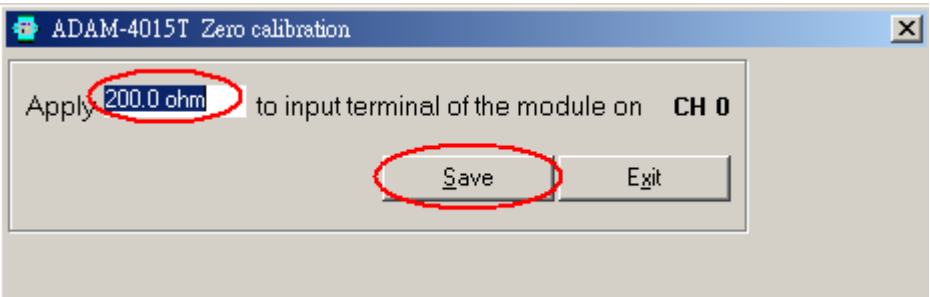

6. Click on “Span Cal.”

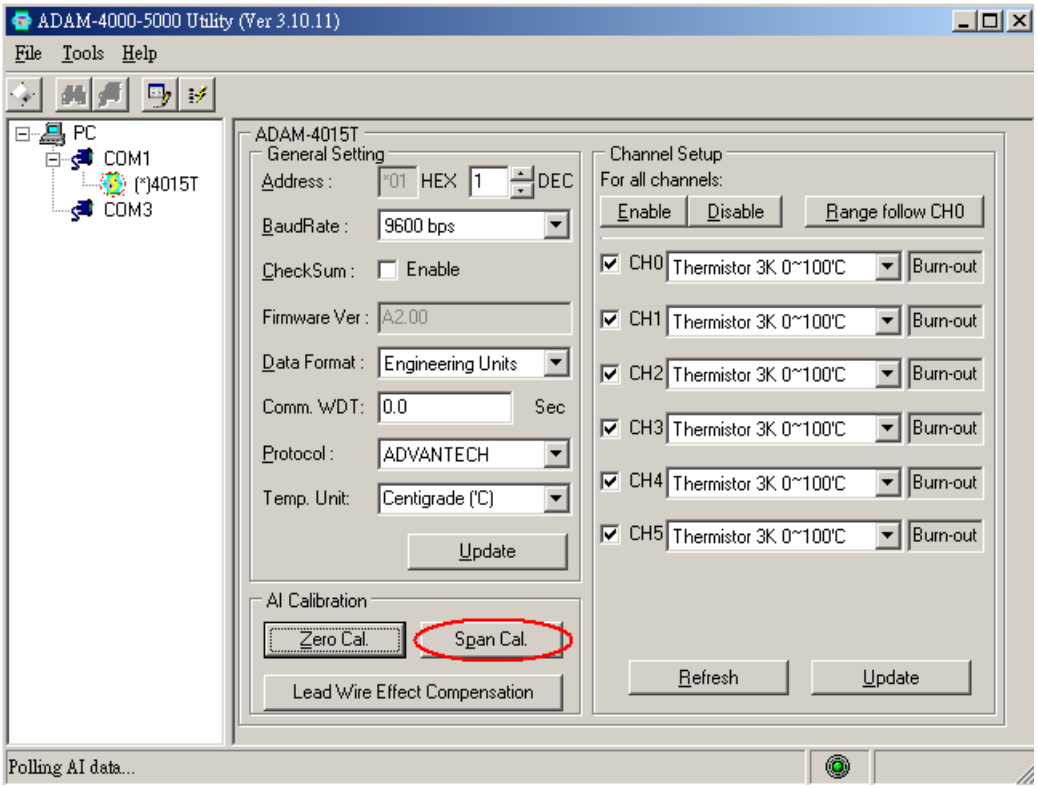

7. Apply 10K ohms resistor with 0.01% accuracy to CH0 and then click on “Save”

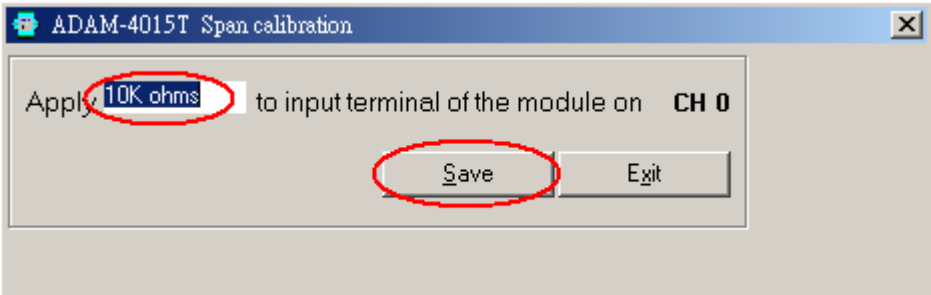

8. Finished!

If you select the range “Thermistor 10K 0~100C”, please follow the calibration steps as below.

1. Change the input range to “Thermistor 10K 0~100C” and click on “Update”

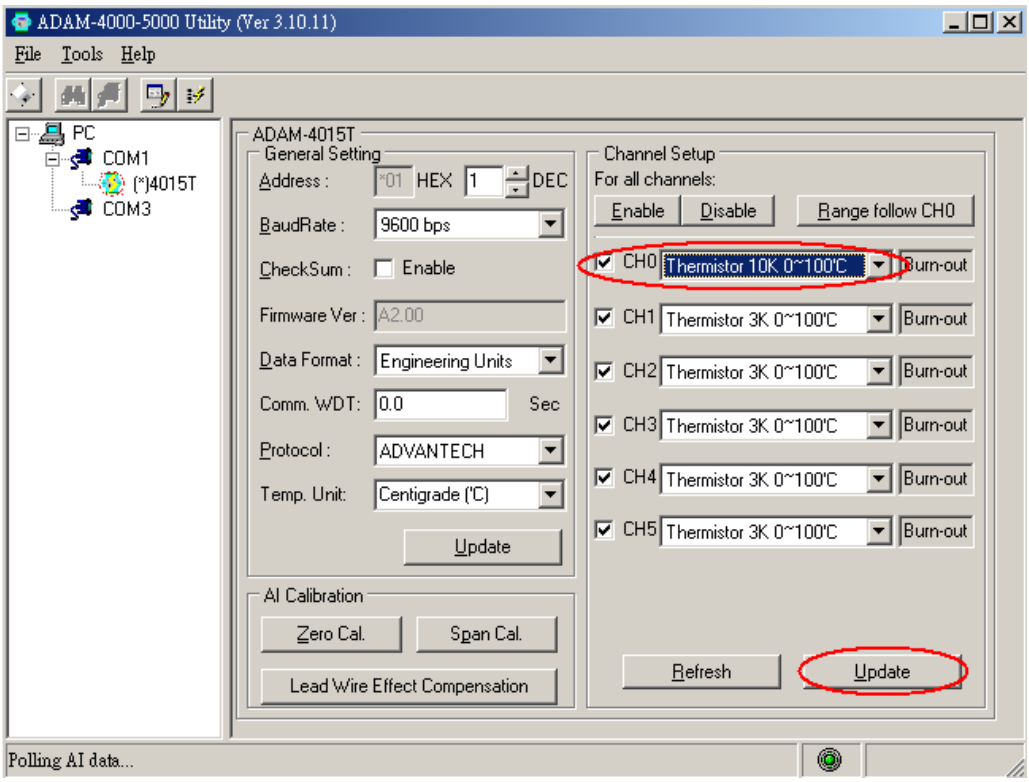

2. Click on “Lead Wire Effect Compensation”.

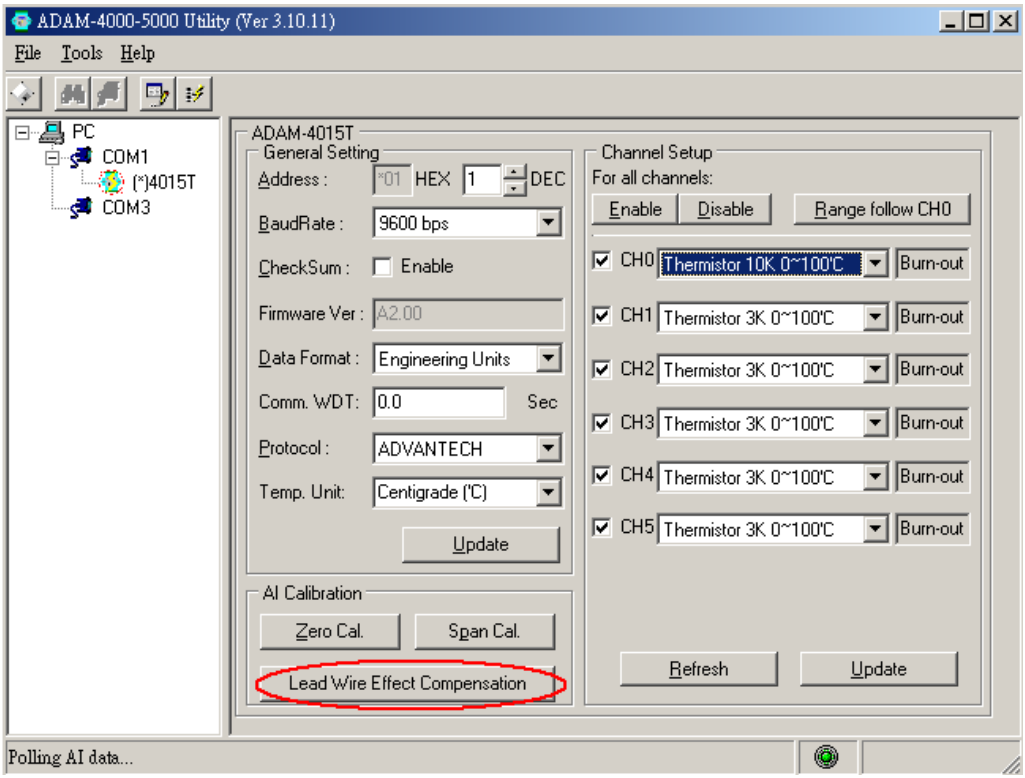

3. Set the resistance to “0” and click on “Save”.

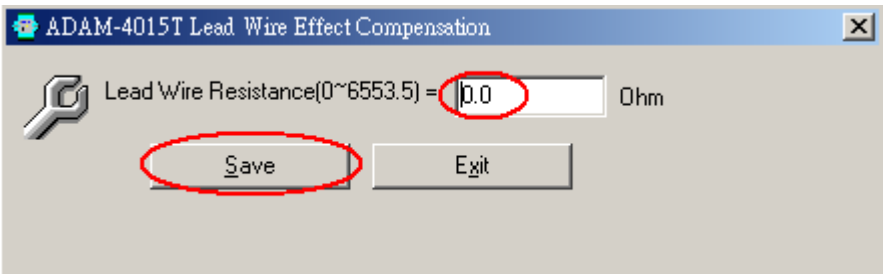

4. Click on “Zero Cal.”

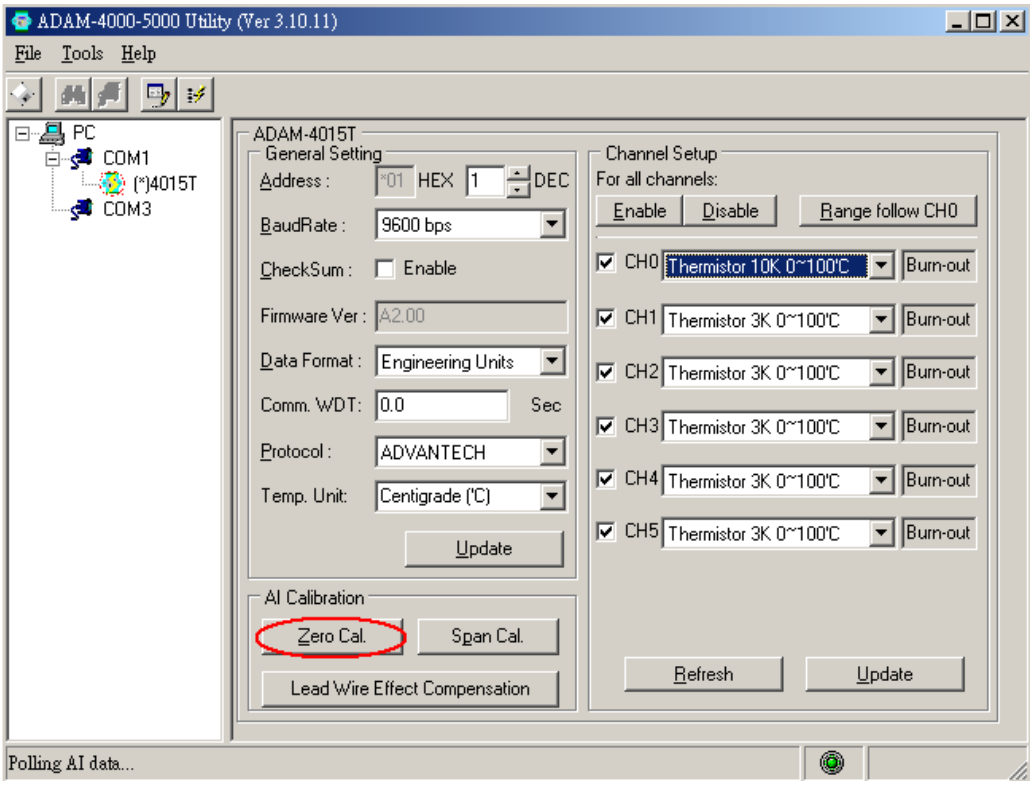

5. Apply 800.0 ohms resistor with 0.01% accuracy to CH0 and then click on “Save”

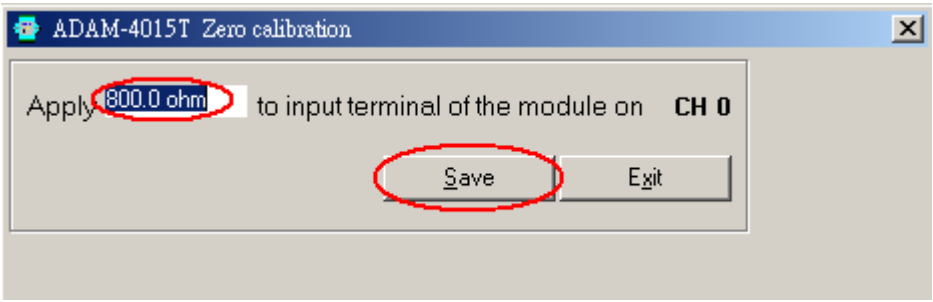

6. Click on “Span Cal.”

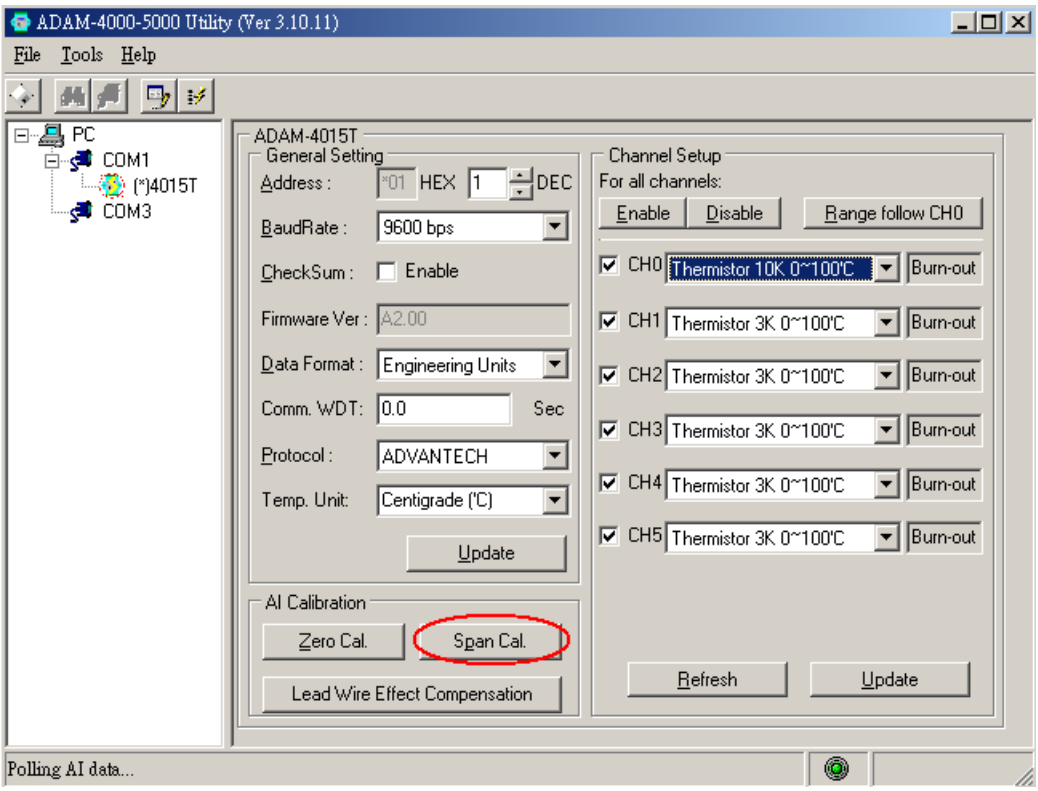

7. Apply 30K ohms resistor with 0.01% accuracy to CH0 and then click on “Save”

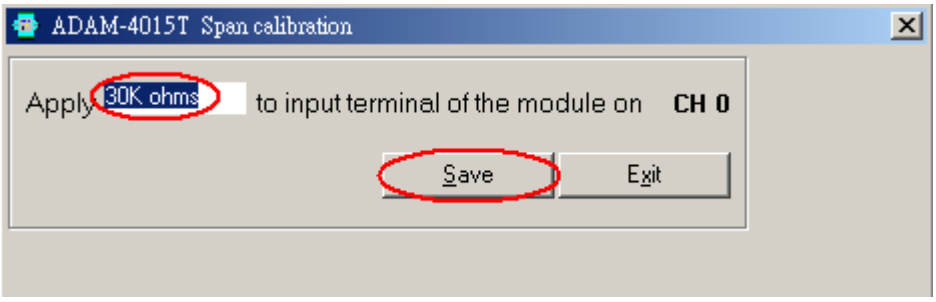

8. Finished!

8.4 Analog Output Calibration

Model: ADAM-4021/4024

The output current of analog output modules can be calibrated by using a low and high calibrating value. The analog output modules can be configured in one of the two ranges, 0-20 mA and 4-20 mA. Since the low limit of the 0 - 20 mA ranges, 0 mA, is an absolute reference (no power, or immeasurably small power). However, just two levels, 4 mA and 20 mA, are needed for calibration.

1. Apply power to the analog output module and let it warm up for about 30 minutes.
2. Assure that the module is correctly installed, and its configuration is according to your specifications. It should match the output range that you want to calibrate. You can do this by using the ADAM utility software. (Please refer to Appendix D, Utility Software.)
3. Connect either a 5-digit millimeter or voltmeter with a shunt resistor (250Ω, 0.01% , and 10ppm) to the screw terminals of the module

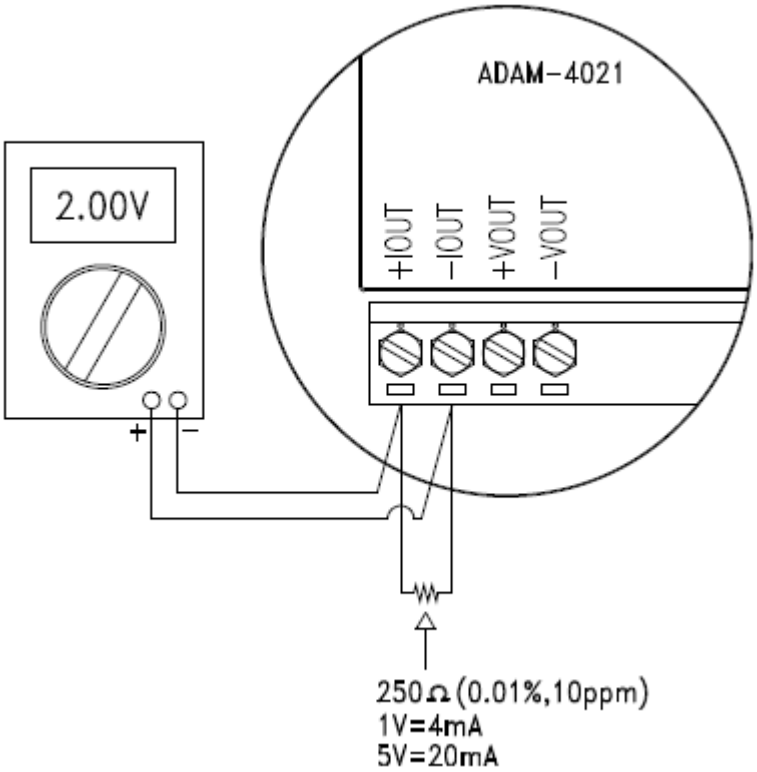

Figure 8.6 Setup for Analog Output Calibration

4. Issue the Analog Data Out command to the module with an output value of 4 mA.
5. Check the actual output value at the terminals. If it does not equal to 4 mA, use the “Trim” option in the “Calibrate” sub menu to change the actual output. Trim the module until the millimeter indicates exactly 4 mA. In the case of using a voltage meter with shunt resistor, the voltage meter should indicate exactly 1 V. (When calibrating for 20 mA using voltage meter and shunt resistor, the correct voltage would be 5 V.)
6. Issue the 4 mA Calibration command to indicate that the output is calibrated. The calibrated parameters should be stored in the modules EEPROM.
7. Execute an Analog Data Out command with an output value of 20 mA, and the output will approximately be 20 mA.

8. Continue executing the Trim Calibration command until the output current is equal to exactly 20 mA.
9. Execute the 20 mA Calibration command until the present output is exactly 20 mA. The analog output module will store its calibrated parameters in EEPROM.

Module: ADAM-4016

1. Apply power to the strain gauge input module and let it warm up for about 30 minutes.
2. Assure that the module is correctly installed. Then, connect a voltmeter to the screw terminals of the module.

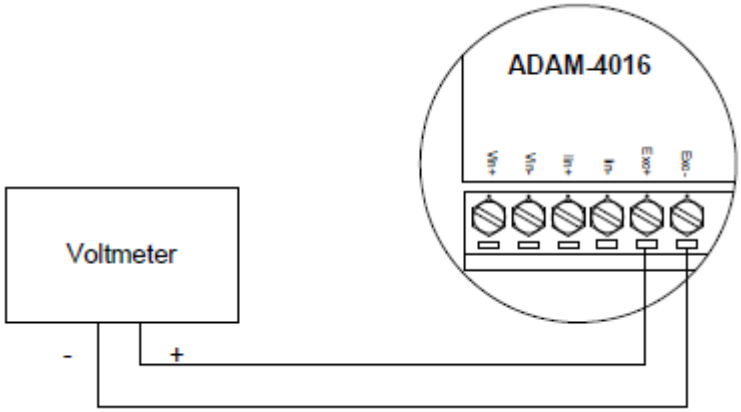

Figure 8.7 Setup for Voltage Output Calibration

3. Execute the Zero Calibration command. This is done through the ADAM utility software. (Please see "A/O 0V Calibration" option in the Calibration sub-menu of the ADAM utility software.)

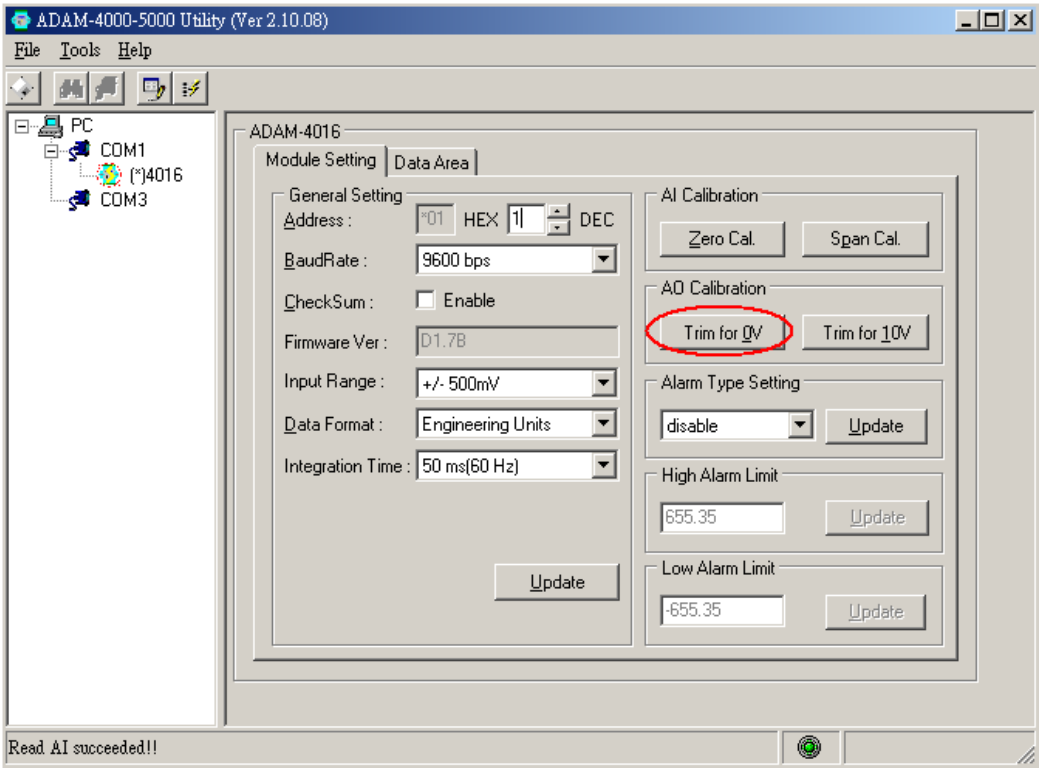

Figure 8.8 Zero Calibration

4. Execute the Span Calibration command. This can be done through the ADAM utility software. (Please see "A/O 10 V Calibration" option in the Calibration sub-menu of the ADAM utility software.)

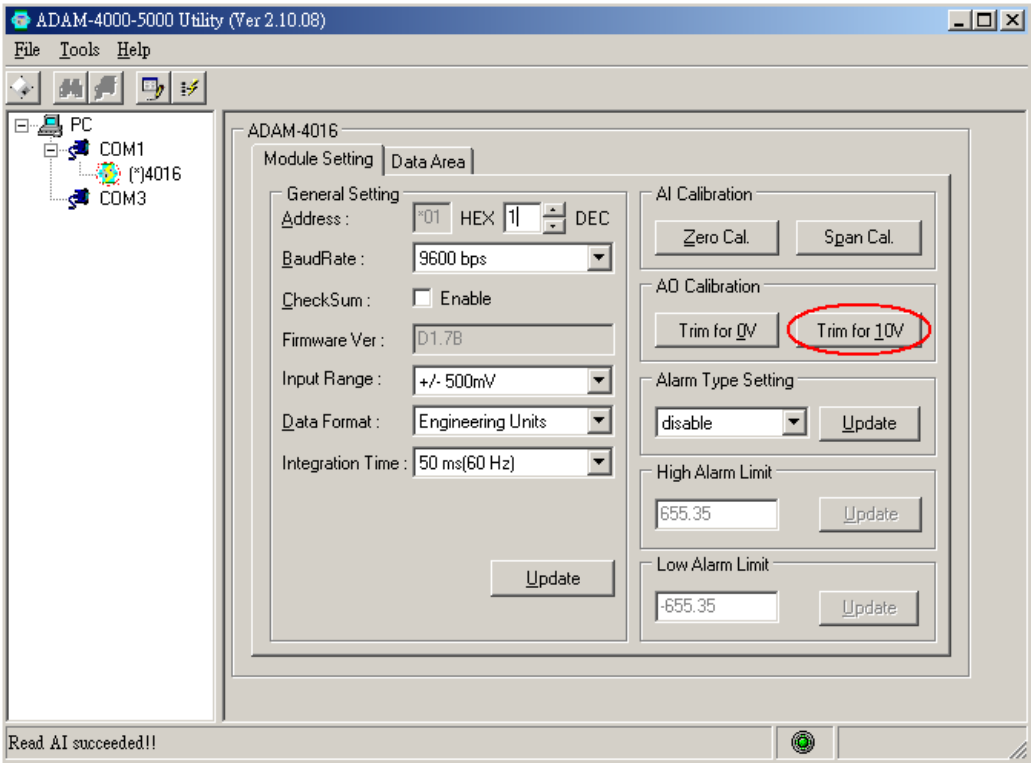

Figure 8.9 Span Calibration

5. Check the actual output value at the terminals. If this does not equal 0 V or 10 V, use the Trim Calibration command to change the output value. This is done through the ADAM utility software. (Use the arrow key to adjust the output value after executing the "A/O 0V Calibration" or "A/O 10 V Calibration". Right and Up keys mean increasing, and Left and Down keys mean decreasing).

Appendix A

Technical Specifications

A.1 ADAM-4011 Thermocouple Input Module

Table A.1: ADAM-4011 Specifications	
T/C channel number	1
Input range	J, K, T, E, R, S and B Thermocouple ±15 mV, ±50 mV, ±100 mV, ±500mV, ±1 V, ±2.5 V and ±20mA
Output speed (in bps) Maximum distance	RS-485 (2-Wire) 1200, 2400, 4800, 9600, 19.2K, 38.4K, 57.6K, 115.2K 4000 ft. (1200 m.)
Accuracy	±0.05% or better
Zero drift	±6μV/°C
Span drift	±25 ppm/°C
Isolation-rated voltage	3000 V_{DC}
CMR @ 50/60 Hz	150 dB
NMR @ 50/60 Hz	100 dB
Resolution	16-bit
Sampling rate	10 samples/second
Input impedance	Voltage: 2 MΩ, Current: 125 Ω
Digital output Sink current Power dissipation	2 channels open collector to 30 V 30 mA maximum load 300 mW
Digital input Logic level 0 Logic level 1 Pull up current	1 channel +1 V maximum +3.5 to +30 V 0.5 mA
Event counter Max. input frequency Min. pulse width	 50 Hz 1 msec
Support protocol	ADAM ASCII
Watchdog timer	1.6 second (System)
Power supply	+10 to +30 V_{DC} (non-regulated)
Power consumption	1.4 W @ 24 V_{DC}
Burn-out detection	Yes

Table A.2: ADAM-4011 Range Accuracy for Thermocouple				
Range Code (Hex)	**Input Range**	**Typical Accuracy**	**Maximum Error**	**Units**
0E	J thermocouple 0 to760 °C	±0.5	±0.75	°C
0F	K thermocouple 0 to 1370 °C	±0.5	±0.75	°C
10	T thermocouple -100 to 400 °C	±0.5	±0.75	°C
11	E thermocouple 0 to 1000 °C	±0.5	±0.75	°C
12	R thermocouple 500 to 1750 °C	±0.6	±1.5	°C
13	S thermocouple 500 to 1750 °C	±0.6	±1.5	°C
14	B thermocouple 500 to 1800 °C	±1.2	±2.0	°C

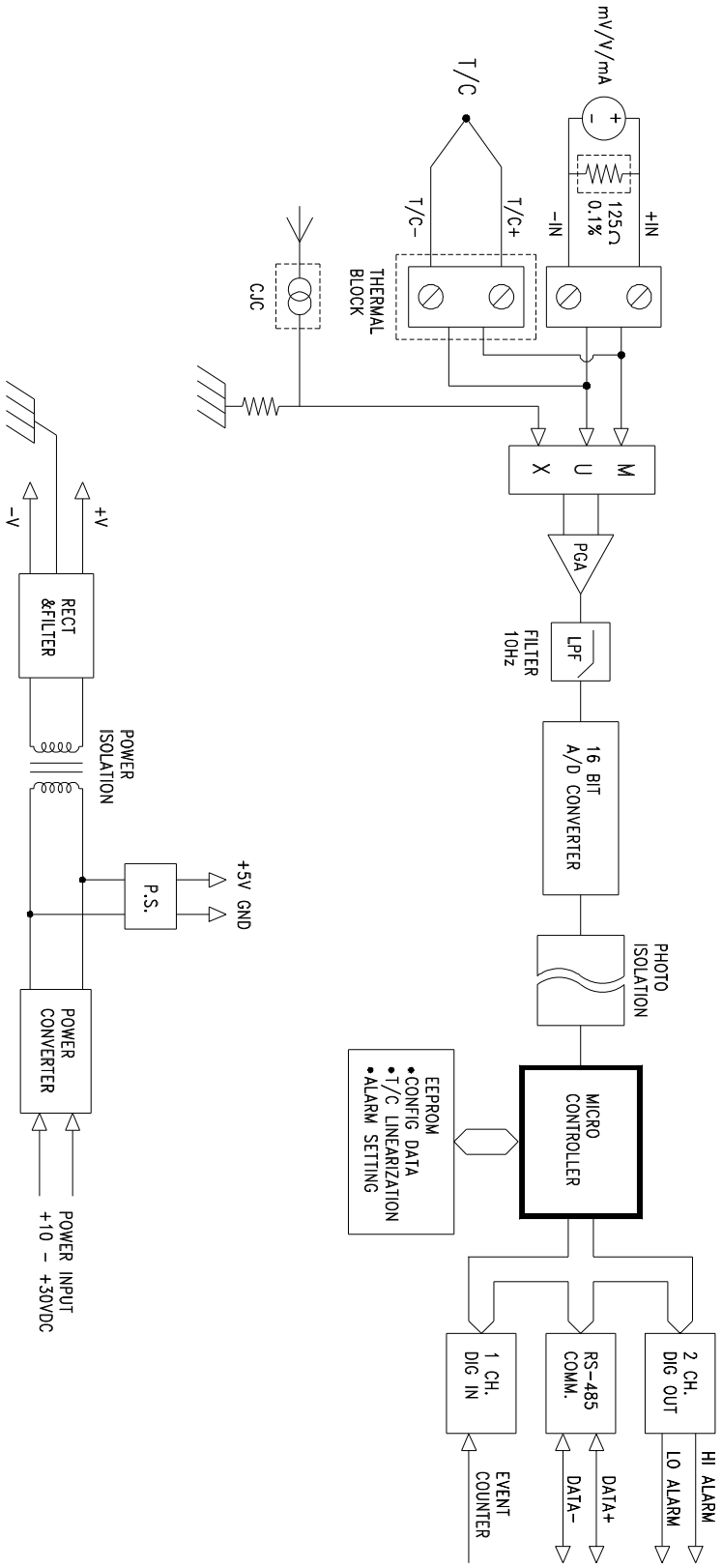

Figure A.1 ADAM-4011 Function Diagram

A.2 ADAM-4011D Thermocouple Input Module with LED Display

Table A.3: ADAM-4011D Specifications	
T/C channel number	1
Input range	J, K, T, E, R, S and B Thermocouple ±15 mV, ±50 mV, ±100 mV, ±500mV, ±1 V, ±2.5 V and ±20mA
Output speed (in bps) Maximum distance	RS-485 (2-Wire) 1200, 2400, 4800, 9600, 19.2K, 38.4K, 57.6K, 115.2K 4000 ft. (1200 m.)
Accuracy	±0.05% or better
Zero drift	±6 μV/°C
Span drift	±25 ppm/°C
Isolation-rated voltage	3000 V_{DC}
CMR @ 50/60 Hz	150 dB
NMR @ 50/60 Hz	100 dB
Resolution	16-bit
Sampling rate	10 samples/second
Input impedance	Voltage: 2 MΩ, Current: 125 Ω
LED indicator	5 digit readout
Digital output Sink current Power dissipation	2 channels open collector to 30 V 30 mA maximum load 300 mW
Digital input Logic level 0 Logic level 1 Pull up current	1 channel +1 V maximum +3.5 to +30 V 0.5 mA
Event counter Max. input frequency Min. pulse width	 50 Hz 1 msec
Support protocol	ADAM ASCII
Watchdog timer	1.6 second (System)
Power supply	+10 to +30 V_{DC} (non-regulated)
Power consumption	1.4 W @ 24 V_{DC}
Burn-out detection	Yes

Table A.4: ADAM-4011D Range Accuracy for Thermocouple				
Range Code (Hex)	**Input Range**	**Typical Accuracy**	**Maximum Error**	**Units**
0E	J thermocouple 0 to760 °C	±0.5	±0.75	°C
0F	K thermocouple 0 to 1370 °C	±0.5	±0.75	°C
10	T thermocouple -100 to 400 °C	±0.5	±0.75	°C
11	E thermocouple 0 to 1000 °C	±0.5	±0.75	°C
12	R thermocouple 500 to 1750 °C	±0.6	±1.5	°C
13	S thermocouple 500 to 1750 °C	±0.6	±1.5	°C
14	B thermocouple 500 to 1800 °C	±1.2	±2.0	°C

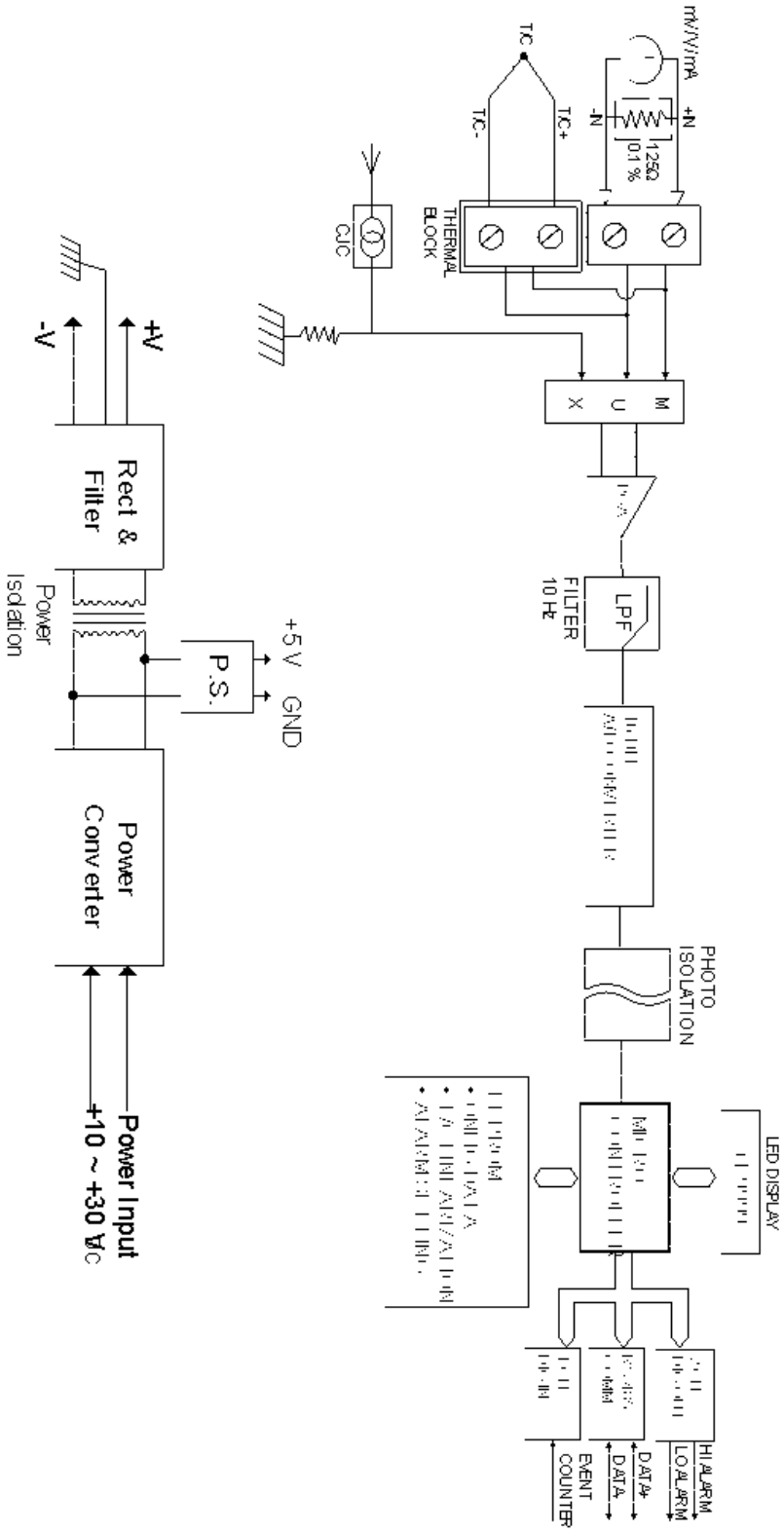

Figure A.2 ADAM-4011D Function Diagram

A.3 ADAM-4012 Analog Input Module

Table A.5: ADAM-4012 Specifications	
AI channel number	1
Input range	±150 mV, ±500mV, ±1 V, ±5 V, ±10 V and ±20mA
Output speed (in bps) Maximum distance	RS-485 (2-wire) 1200, 2400, 4800, 9600, 19.2K, 38.4K, 57.6K, 115.2K 4000 ft. (1200 m.)
Accuracy	±0.05% or better
Zero drift	±6 μV/°C
Span drift	±25 ppm/°C
Isolation-rated voltage	3000 V_{DC}
CMR @ 50/60 Hz	150 dB
NMR @ 50/60 Hz	100 dB
Resolution	16-bit
Sampling rate	10 samples/second
Input impedance	Voltage: 20 MΩ, Current: 125 Ω
Digital output Sink current Power dissipation	2 channels open collector to 30 V 30 mA maximum load 300 mW
Digital input Logic level 0 Logic level 1 Pull up current	1 channel +1 V maximum +3.5 to +30 V 0.5 mA
Event counter Max. input frequency Min. pulse width	 50 Hz 1 msec
Support protocol	ADAM ASCII
Watchdog timer	1.6 second (System)
Power supply	+10 to +30 V_{DC} (non-regulated)
Power consumption	1.2 W @ 24 V_{DC}

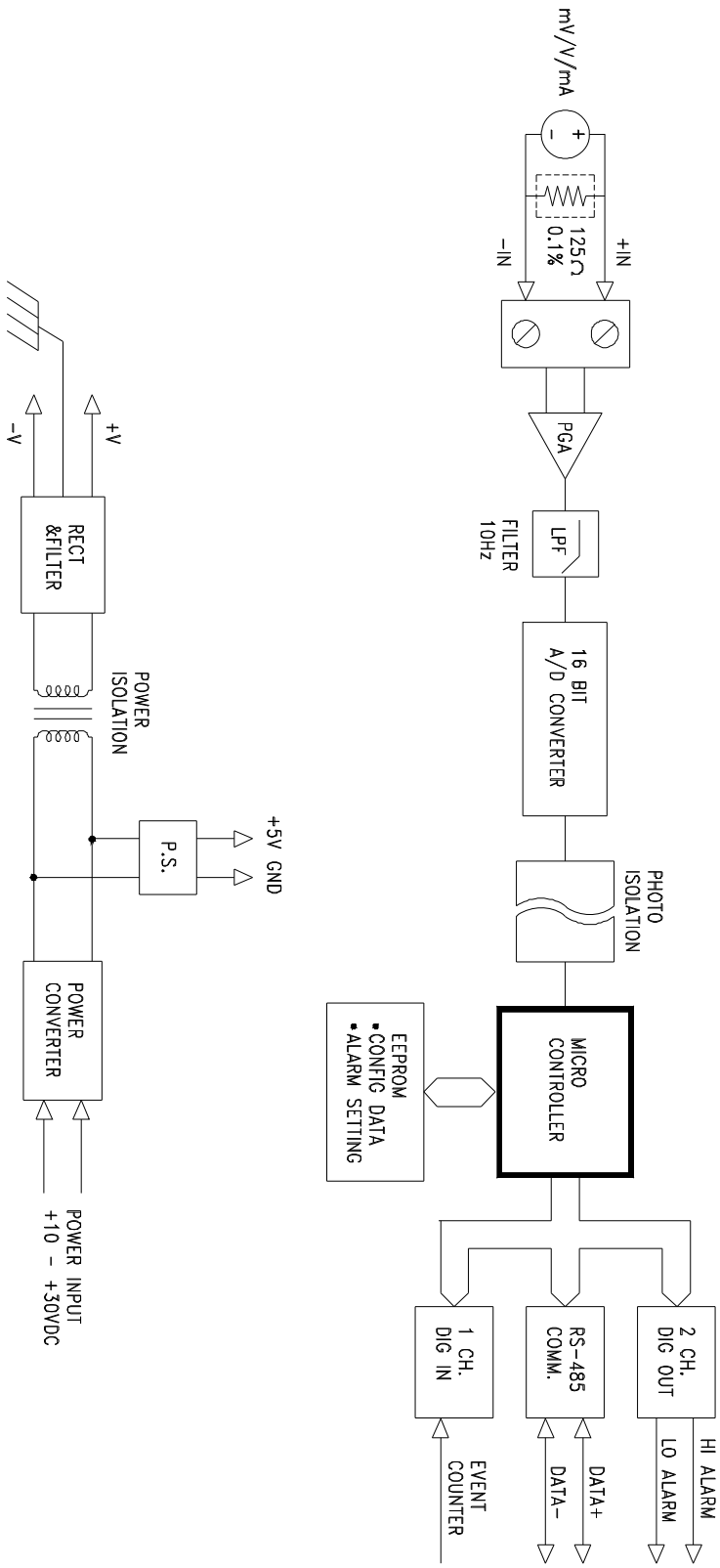

Figure A.3 ADAM-4012 Function Diagram

A.4 ADAM-4013 RTD Input Module

Table A.6: ADAM-4013 Specifications	
RTD channel number	1
Input type	Pt or Ni RTD
Output speed (in bps) Maximum distance	RS-485 (2-Wire) 1200, 2400, 4800, 9600, 19.2K, 38.4K, 57.6K, 115.2K 4000 ft. (1200 m.)
Accuracy	±0.1% or better
Zero drift	±3μV/°C
Span drift	±25 ppm/°C
Input connections	2, 3 or 4 wires
Isolation-rated voltage	3000 V_{DC}
CMR @ 50/60 Hz	150 dB
NMR @ 50/60 Hz	100 dB
Sampling rate	10 samples/second
Input impedance	2 MΩ
Support protocol	ADAM ASCII
Watchdog timer	1.6 second (System)
Power supply	+10 to +30 V_{DC} (non-regulated)
Power consumption	0.7 W @ 24 V_{DC}

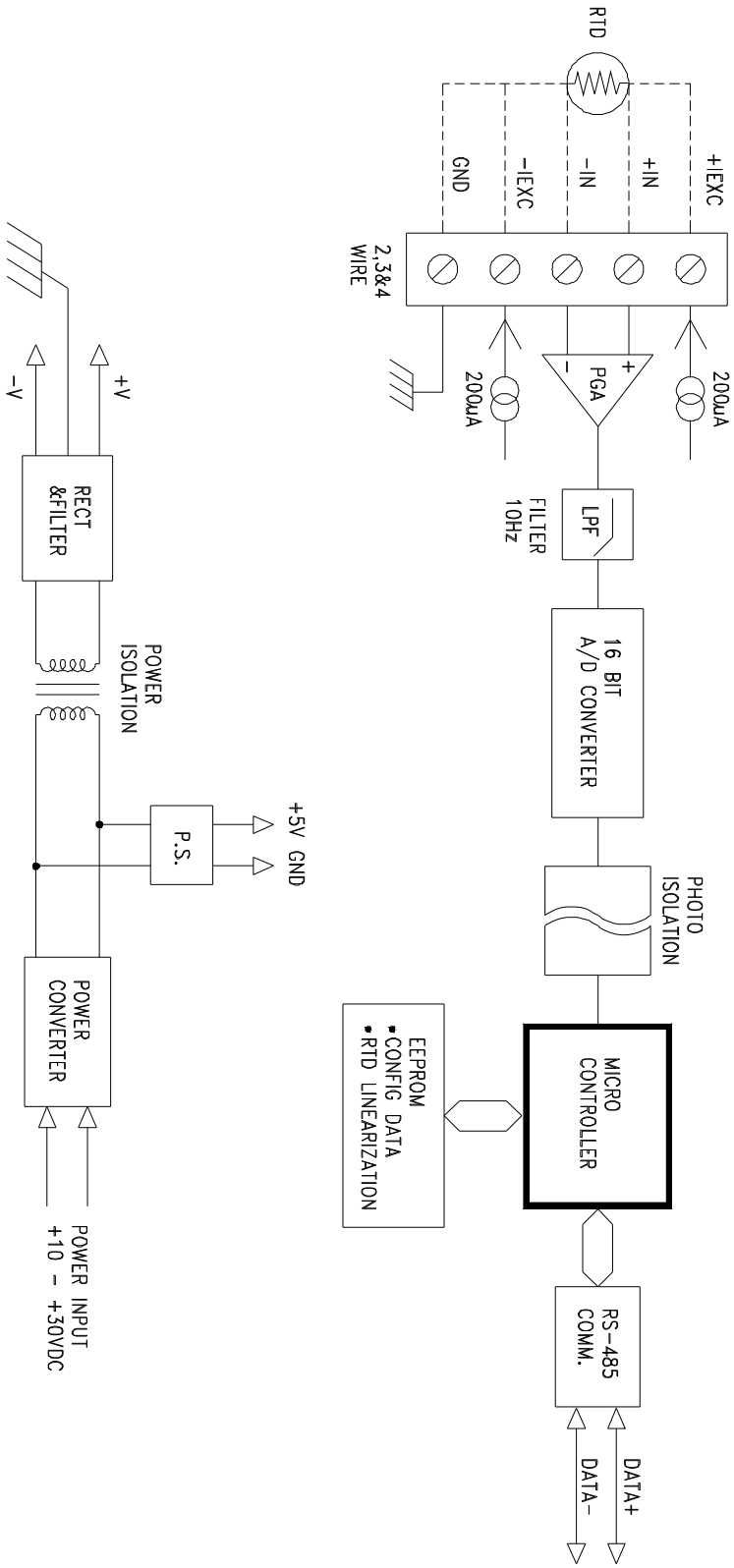

Figure A.4 ADAM-4013 Function Diagram

A.5 ADAM-4016 Analog Input/Output Module

Table A.7: ADAM-4016 Specifications	
AI channel number	1
AI range	±15 mV, ±50 mV, ±100 mV, ±500 mV and ±20 mA
Output Speed (bps) Maximum distance	RS-485 (2-wire) 1200, 2400, 4800, 9600, 19.2K, 38.4K, 57.6K, 115.2K 4000 ft. (1200 m)
Input impedance	Voltage: 2 MΩ, Current: 125 Ω
AI isolation voltage	3000 V_{DC}
AI resolution	16-bit
AI sampling rate	10 samples/second
AI accuracy	±0.05% or better
AI zero drift	±6 μV /?
AI span drift	±25 ppm/?
AI CMR @ 50/60 Hz	150 dB
AI NMR @ 50/60 Hz	100 dB
AO channel number	1
AO range	0~10 V
AO drive current	30 mA
AO isolation voltage	3000 V_{DC}
AO accuracy	0.05% of FSR
AO drift	± 50 ppm/°C
Digital output Sink current Power dissipation	4 channels open collector to 30 V 30 mA maximum load 300 mW
Support protocol	ADAM ASCII
Watchdog timer	1.6 second (System)
Power requirements	+10 to +30 V_{DC} (non-regulated)
Power consumption	2.2 W @ 24 V_{DC}

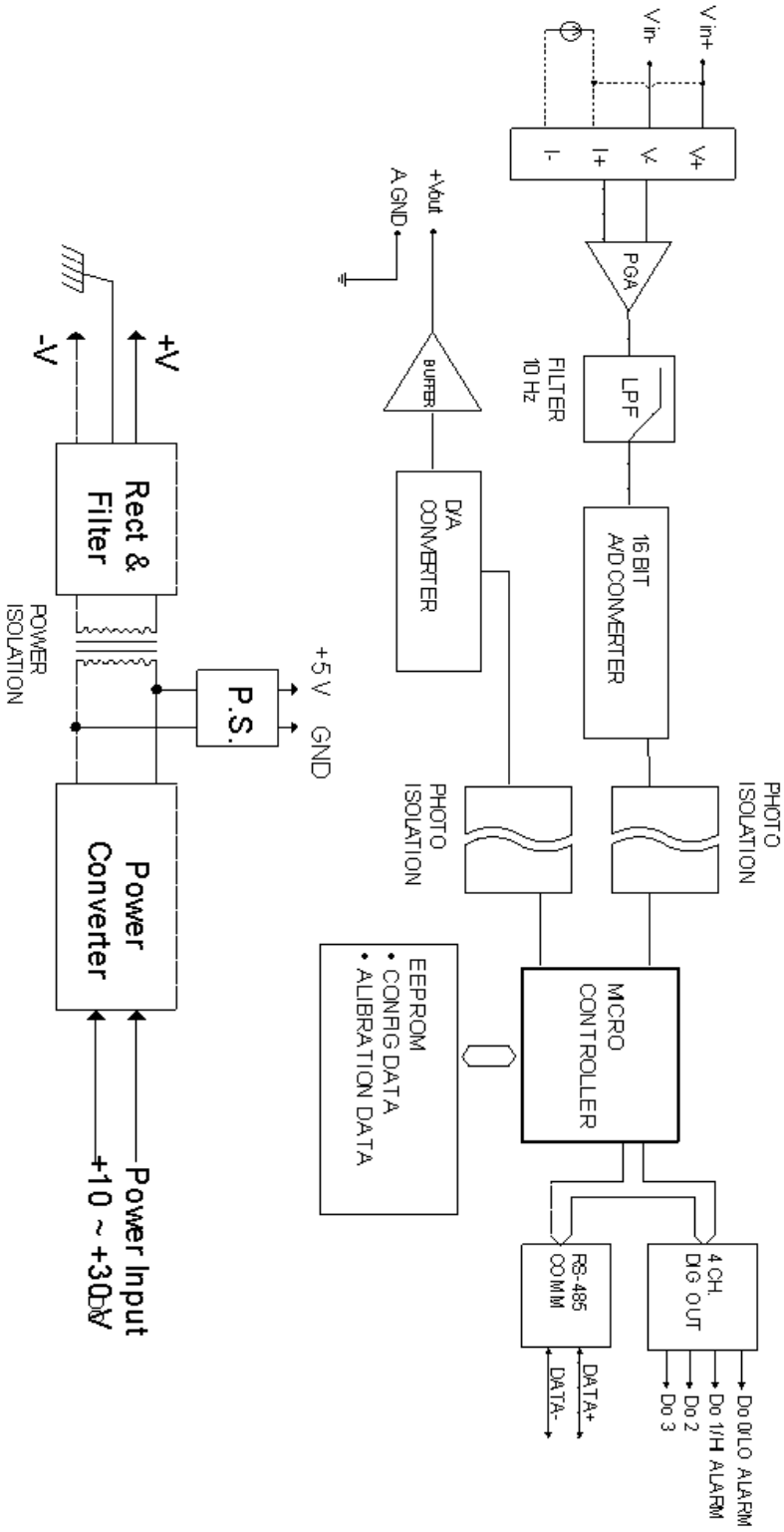

Figure A.5 ADAM-4016 Function Diagram

A.6 ADAM-4017/4017+ 8-channel Analog Input Module

Table A.8: ADAM-4017/4017+ Specifications	
AI channel number	**ADAM-4017:** 6 differential and 2 single-ended **ADAM-4017+:** 8 differential
Input type	mV, V and mA
Input range	**ADAM-4017:** ±150 mV, ±500 mV, ±1 V, ±5 V, ±10 V and ±20 mA **ADAM-4017+:** ±150 mV, ±500 mV, ±1 V, ±5 V, ±10 V, ±20 mA and 4~20 mA
Output speed (bps) Maximum distance	RS-485 (2-wire) 1200, 2400, 4800, 9600, 19.2K, 38.4K, 57.6K, 115.2K 4000 ft. (1200 m)
Isolation voltage	3000 V_{DC}
Resolution	16-bit
Sampling rate	10 samples/second (total)
Bandwidth	13.1 Hz
Accuracy	±0.1% or better
Zero drift	±6 μV/°C
Span drift	±25 ppm/°C
CMR @ 50/60 Hz	120 dB
NMR @ 50/60 Hz	100 dB
Input impedance	Voltage: 20 MΩ, Current: 120 Ω
Support protocol	ADAM ASCII **(ADAM-4017 & 4107+)** MODBUS/RTU **(ADAM-4017+ only)**
Watchdog timer	**ADAM-4017:** System (1.6 second) **ADAM-4017+:** System (1.6 second) and communication
Power requirements	+10 to +30 V_{DC} (non-regulated)
Power consumption	1.2 W @ 24 V_{DC}

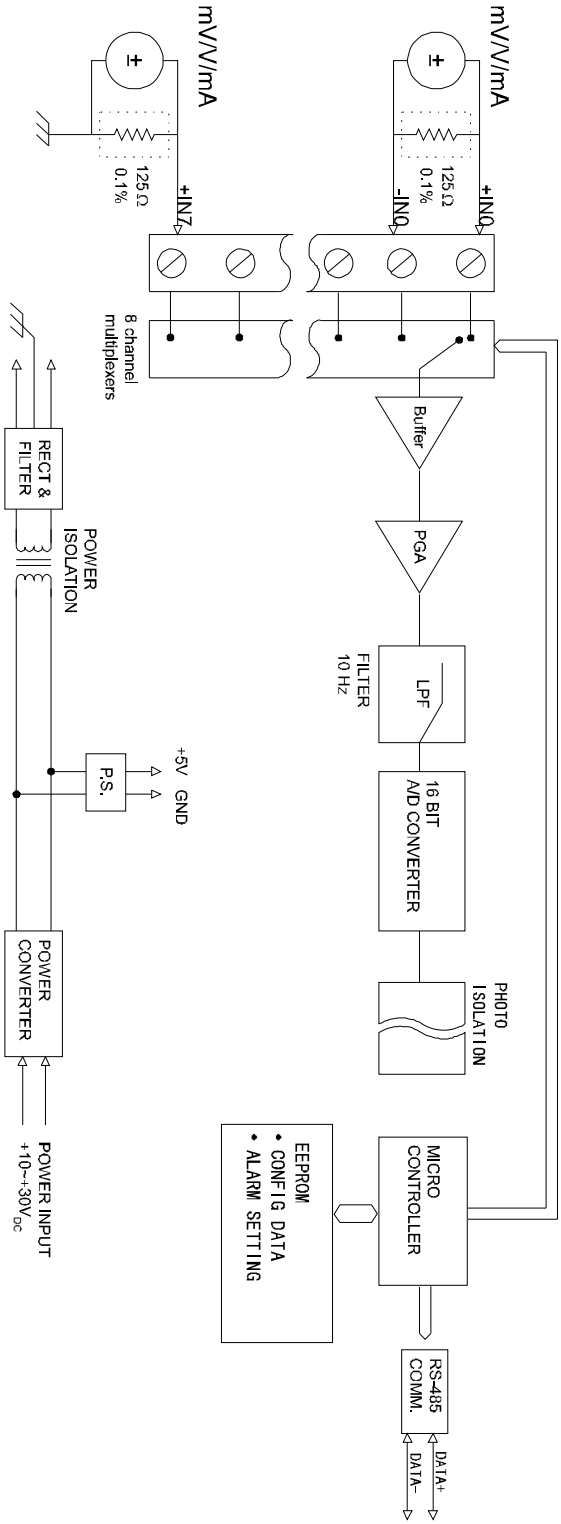

Figure A.6 ADAM-4017/4017+ Function Diagram

The use of a 125 ohm external resistor is when only 4017 needs one. The resistor is contained internally for the ADAM- 4017+ and doesn't need to be include externally.

A.7 ADAM-4018/4018+ 8-channel Analog Input Module

Table A.9: ADAM-4018/4018+ Specifications	
AI channel number	**ADAM-4018:** 6 differential and 2 single-ended **ADAM-4018+:** 8 differential
Input type	Thermocouple with mV, V, or mA
Input range	J, K, T, E, R, S and B Thermocouple **ADAM-4018:** ±15 mV, ±50 mV, ±100 mV, ±500 mV, ±1 V, ±2.5 V and ±20 mA **ADAM-4018+:** ±20 mA and 4~20 mA
Output speed (bps) Maximum distance	RS-485 (2-wire) 1200, 2400, 4800, 9600, 19.2K, 38.4K, 57.6K, 115.2K 4000 ft. (1200 m)
Isolation voltage	3000 V_{DC}
Resolution	16-bit
Sampling rate	10 samples/second (total)
Bandwidth	13.1 Hz
Accuracy	±0.1% or better
Zero drift	±6 μV/°C
Span drift	±25 ppm/°C
CMR @ 50/60 Hz	120 dB
NMR @ 50/60 Hz	100 dB
Input impedance	Voltage: 20 MΩ, Current: 120 Ω
Support protocol	ADAM ASCII **(ADAM-4018 & 4108+)** MODBUS/RTU **(ADAM-4018+ only)**
Watchdog timer	**ADAM-4018:** System (1.6 second) **ADAM-4018+:** System (1.6 second) and communication
Power requirements	+10 to +30 V_{DC} (non-regulated)
Power consumption	0.8 W @ 24 V_{DC}
Burn-out detection	All T/C input **(ADAM-4018+ only)**

Table A.10: ADAM-4018/4018+ Range Accuracy for Thermocouple				
Range Code (Hex)	**Input Range**	**Typical Accuracy**	**Maximum Error**	**Units**
0E	J thermocouple 0 to760 °C	±1.0	±1.5	°C
0F	K thermocouple 0 to 1370 °C	±1.0	±1.5	°C
10	T thermocouple -100 to 400 °C	±1.0	±1.5	°C
11	E thermocouple 0 to 1000 °C	±1.0	±1.5	°C
12	R thermocouple 500 to 1750 °C	±1.2	±2.5	°C
13	S thermocouple 500 to 1750 °C	±1.2	±2.5	°C
14	B thermocouple 500 to 1800 °C	±2.0	±3.0	°C

Note! *Because the CJC sensor of ADAM-4018 is located in the side of channel 0 to 4, the measurement will have the difference ± 1 °C between channel 0 ~ 4 and channel 5 ~ 7.*

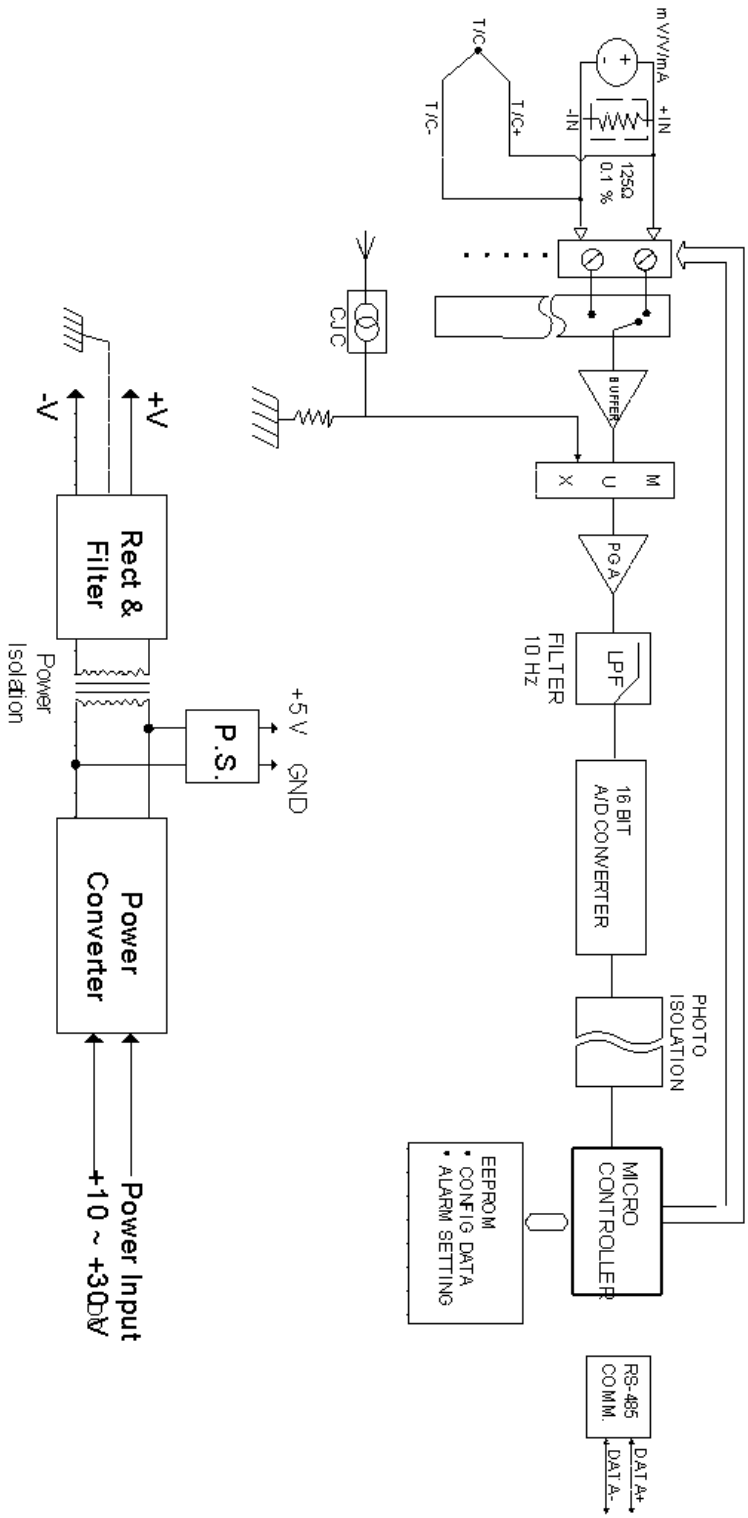

Figure A.7 ADAM-4018/4018+ Function Diagram

A.8 ADAM-4018M 8-channel Analog Input Data Logger

Table A.11: ADAM-4018M Specifications	
AI channel number	6 differential and 2 single-ended
Input type	mV, V and mA
Input range	J, K, T, E, R, S and B Thermocouple ±15 mV, ±50 mV, ±100 mV, ±500 mV, and ±20 mA
Output speed (bps) Maximum distance	RS-485 (2-wire) 1200, 2400, 4800, 9600, 19.2K, 38.4K, 57.6K, 115.2K 4000 ft. (1200 m)
Isolation voltage	500 V_{DC}
Resolution	16-bit
Sampling rate	10 samples/sec(total)
Bandwidth	13.1 Hz
Accuracy	±0.1% or better
Zero drift	±6 μV/°C
Span drift	±25 ppm/°C
CMR @ 50/60 Hz	120 dB
NMR @ 50/60 Hz	100 dB
Input impedance	Voltage: 20 MΩ, Current: 120 Ω
Storage capacity Standard log Event log Mixed log	128 KB Flash memory 38,000 samples (total) 16,300 samples (total) 16,300 data samples and 9,300 event samples (total)
Storage type	Write to end of memory, or circular memory
Logging mode	Standard log, Event log or Mixed log
Sampling interval	2 second to 18 hours
Measurement duration	330 minutes to 20 years
Support protocol	ADAM ASCII
Watchdog timer	1.6 second (System)
Power requirements	+10 to +30 V_{DC} (non-regulated)
Power consumption	1.8 W @ 24 V_{DC}

Table A.12: ADAM-4018M Range Accuracy for Thermocouple				
Range Code (Hex)	**Input Range**	**Typical Accuracy**	**Maximum Error**	**Units**
0E	J thermocouple 0 to760 °C	±1.0	±1.5	°C
0F	K thermocouple 0 to 1370 °C	±1.0	±1.5	°C
10	T thermocouple -100 to 400 °C	±1.0	±1.5	°C
11	E thermocouple 0 to 1000 °C	±1.0	±1.5	°C
12	R thermocouple 500 to 1750 °C	±1.2	±2.5	°C
13	S thermocouple 500 to 1750 °C	±1.2	±2.5	°C
14	B thermocouple 500 to 1800 °C	±2.0	±3.0	°C

Note! *Because the CJC sensor of ADAM-4018M is located in the side of channel 0 to 4, the measurement will have the difference ± 1 °C between channel 0 ~ 4 and channel 5 ~ 7.*

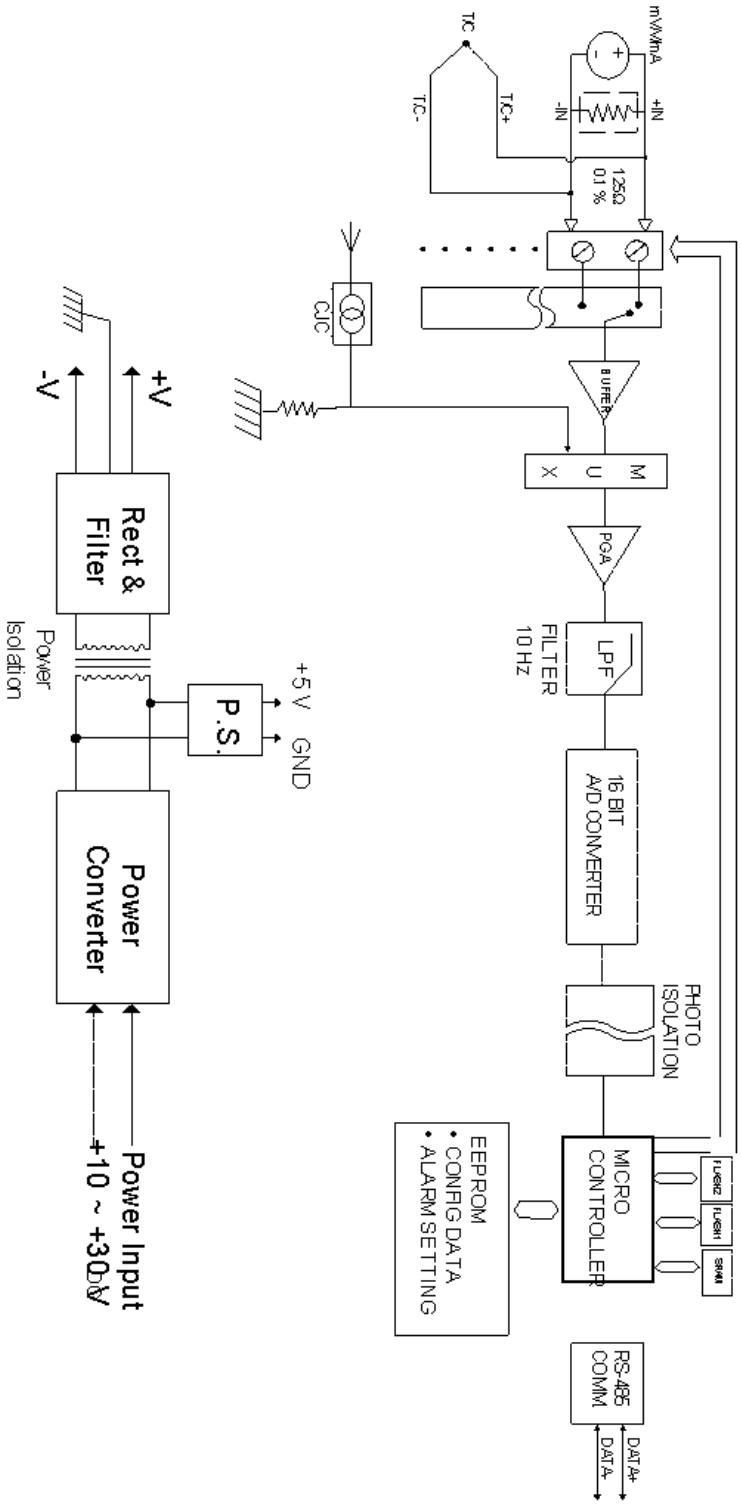

Figure A.8 ADAM-4018M Function Diagram

A.9 ADAM-4019+ 8-channel Universal Analog Input Module

Table A.13: ADAM-4019+ Specifications		
AI channel number	8	
Input type	V, mV, mA and T/C	
Input range	V: ±1 V , ±2.5 V, ±5 V , ±10 V mV: ±100 mV , ±500 mV mA: ±20 mA (with120 **Ω** resister) 4~20 mA(with 120 **Ω** resister) Thermocouple: J 0 to 760 °C K 0 to 1370 °C T -100 to 400 °C E 0 to 1400 °C R 500 to 1750 °C S 500 to 1750 °C B 500 to 1800 °C	
Isolation voltage	3000 V_{DC}	
Resolution	16-bit	
Sampling rate	10 samples/sec (total)	
Input impedance	20 MΩ	
Accuracy	±0.1% or better	
Zero drift	±6 μV/°C	
CMR @ 50/60 Hz	120 dB	
NMR @ 50/60 Hz	100 dB	
Span drift	±25 ppm/°C	
Support protocol	ADAM ASCII and MODBUS/RTU	
Watchdog timer	System (1.6 second) and communication	
Power requirements	+10 to +30 V_{DC} (non-regulated)	
Power consumption	1.0 W @ 24 V_{DC}	
Burn-out detection	+4~20mA and all Thermocouple input	

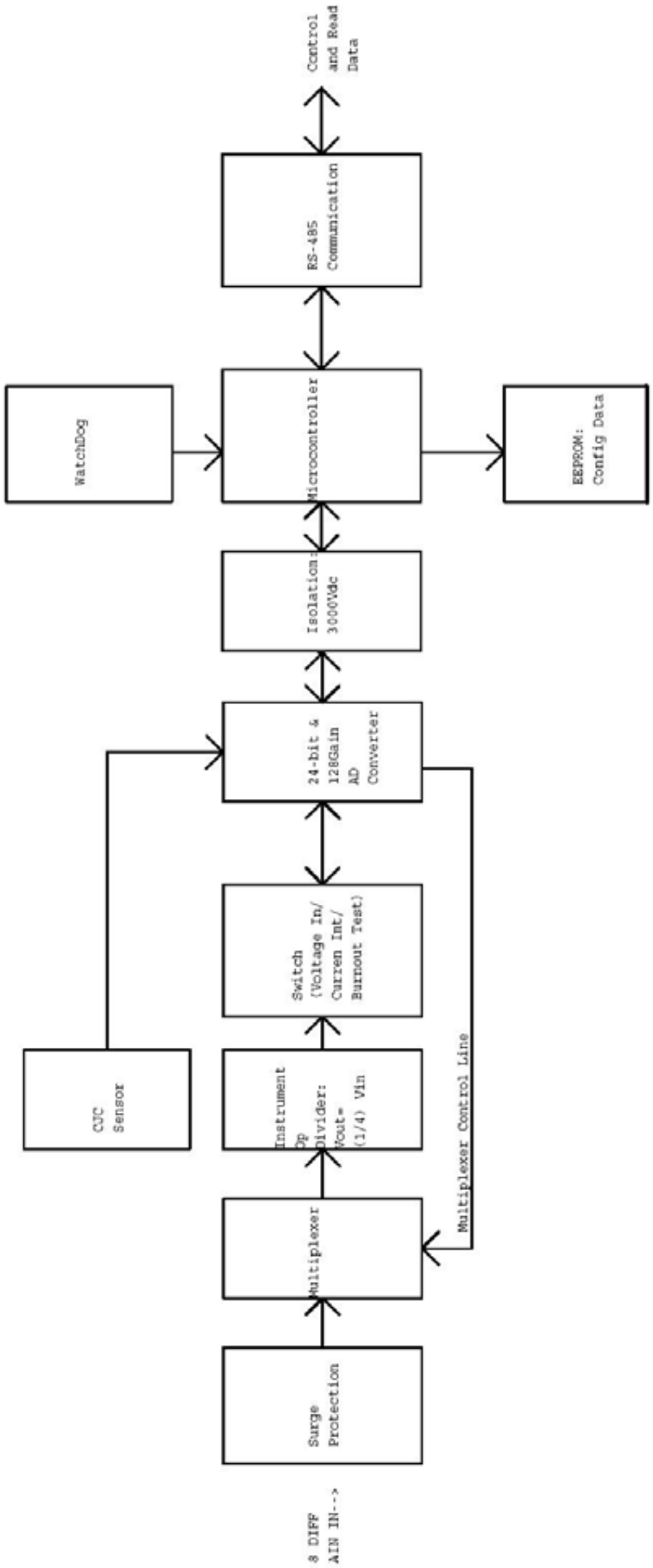

Figure A.9 ADAM-4019+ Function Diagram

A.10 ADAM-4021/4024 Analog Output Module

Table A.14: ADAM-4021/4024 Specifications	
Input speed (bps) Maximum distance	RS-485 (2-wire) 1200, 2400, 4800, 9600, 19.2K, 38.4K, 57.6K, 115.2K 4000 ft. (1200 m)
AO channel number	**ADAM-4021:** 1 **ADAM-4024:** 4
Output type	mA, V
Output range	0~20 mA, 4~20 mA and ±10 V
Accuracy	**ADAM-4021:** ±0.1% of FSR for current output ±0.2% of FSR for voltage output **ADAM-4024:** ±0.1% of FSR for current output ±0.1% of FSR for voltage output
Resolution	12-bit
Readback accuracy	±0.1% of FSR **(ADAM-4021 only)**
Zero drift voltage output current output	±30 μV/°C ±0.2 μA/°C
Span temperature coefficient	±25 ppm/°C
Isolation rated voltage	3000 V_{DC}
Programmable output slope	0.125 to 128 mA/second 0.0625 to 64 V/second
Current load resistor	0 to 500 Ω (source)
Bandwidth	100 samples/second
Output impedance	0.5 Ω
Support protocol	**ADAM-4021:** ADAM ASCII **ADAM-4024:** ADAM ASCII and MODBUS/RTU
Watchdog timer	**ADAM-4021:** System (1.6 second) **ADAM-4024:** System (1.6 second) and communication
Power supply	+10 to +30 V_{DC} (non-regulated)
Power consumption	**ADAM-4021:** 1.4 W @ 24 V_{DC} **ADAM-4024:** 3.0 W @ 24 V_{DC}

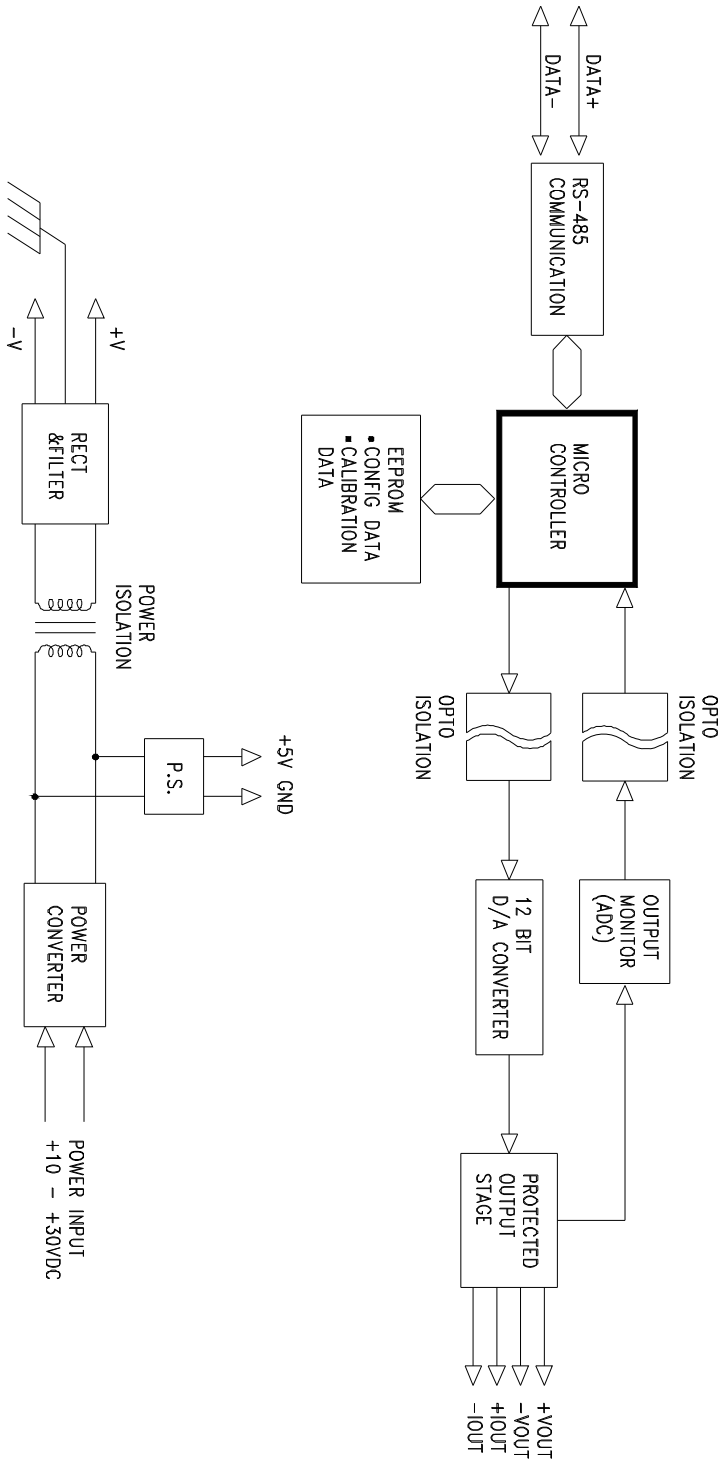

Figure A.10 ADAM-4021 Function Diagram

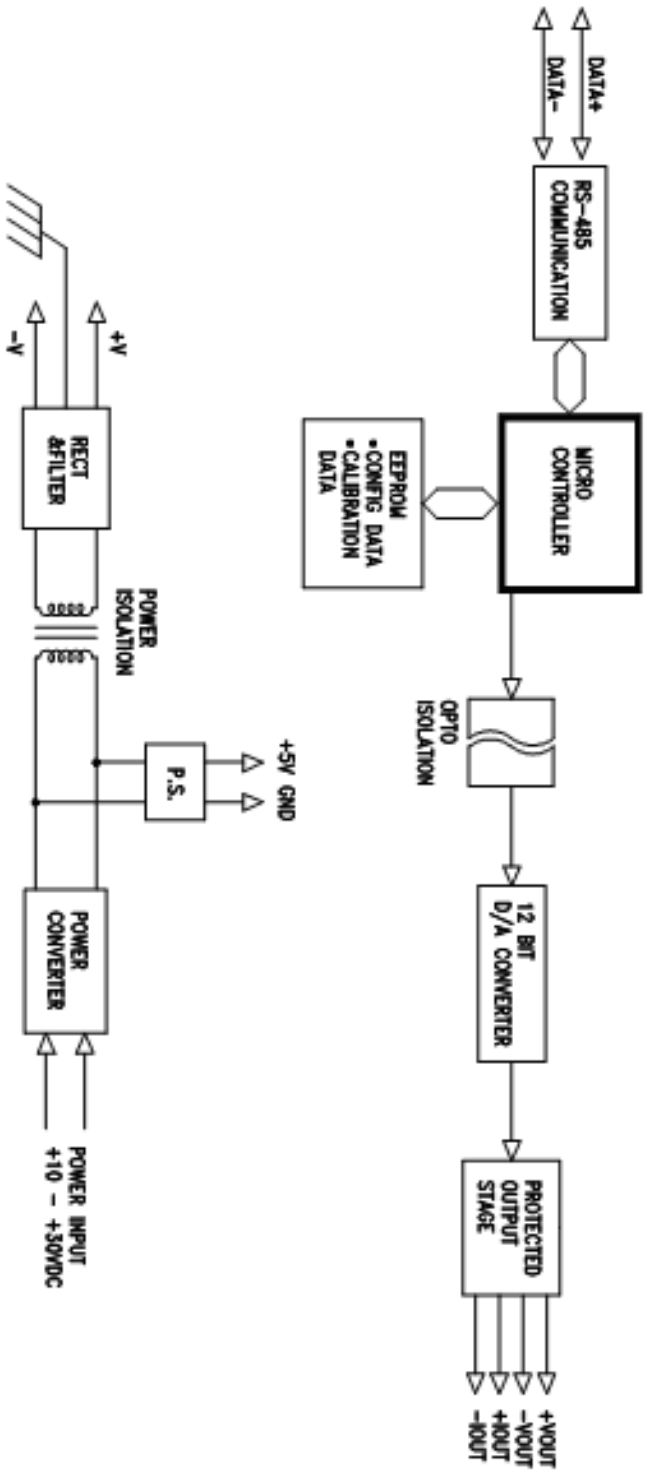

Figure A.11 ADAM-4024 Function Diagram

A.11 ADAM-4050 Digital I/O Module

Table A.15: ADAM-4050 Specifications	
DI/O channel number	7 digital inputs 8 digital outputs
Input/Output speed (bps) Maximum distance	RS-485 (2-wire) 1200, 2400, 4800, 9600, 19.2K, 38.4K, 57.6K, 115.2K 4000 ft. (1200 m)
Digital output Sink-current Power dissipation	Open collector to 30 V 30 mA maximum 300 mW
Digital input level Logic level 0 Logic level 1 Pull-up current	 +1 V maximum +3.5 to +30 V 0.5 mA, 10K resistor to +5 V
Support protocol	ADAM ASCII
Watchdog timer	1.6 second (System)
Power supply	+10 to +30 VDC (non-regulated)
Power consumption	0.4 W @ 24 VDC

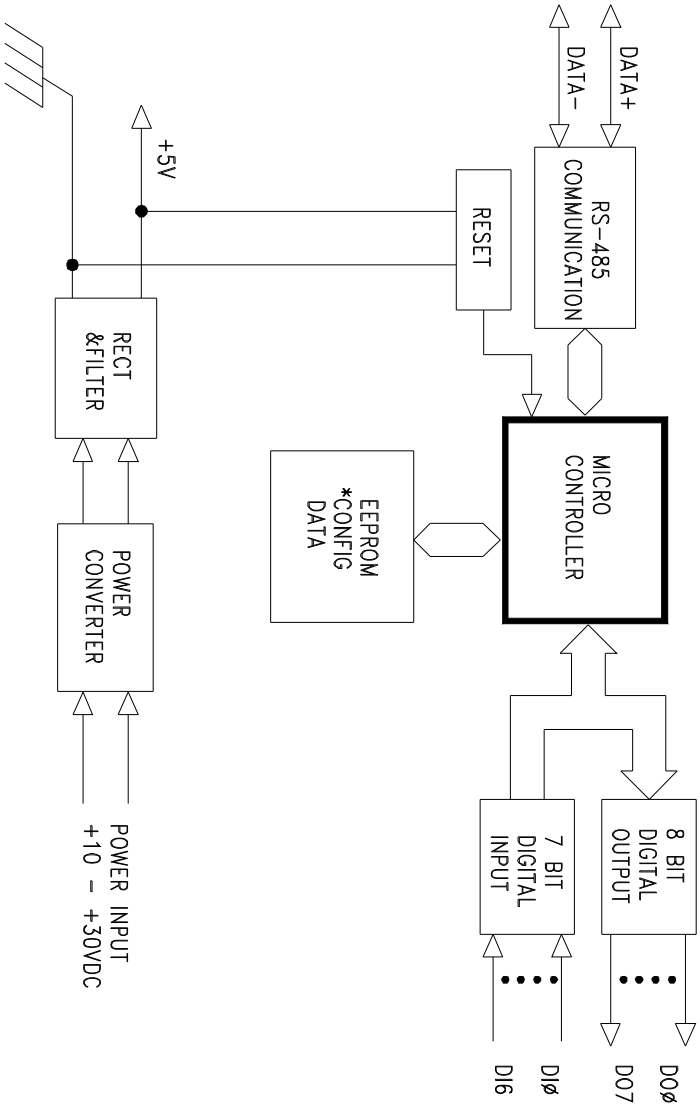

Figure A.12 ADAM-4050 Function Diagram

A.12 ADAM-4051/4052 Isolated Digital Input Module

Table A.16: ADAM-4051/4502 Specifications	
DI/O channel number	**ADAM-4501:** 16 digital inputs **ADAM-4052:** 8 digital inputs (6 fully independent isolated channels, and 2 isolated channels with common ground)
Input/Output speed (bps) Maximum distance	RS-485 (2-wire) 1200, 2400, 4800, 9600, 19.2K, 38.4K, 57.6K, 115.2K 4000 ft. (1200 m)
Digital input level **ADAM-4051:** **Dry Contact:** Logic level 0: Logic level 1: **Wet Contact:** Logic level 0: Logic level 1: **ADAM-4052:** Logic level 0: Logic level 1:	 Close to GND Open +3V maximum +10 to 50V +1V maximum +3 to 30V
Input resistance	**ADAM-4051:** 5.2 kΩ **ADAM-4052:** 3 kΩ
Isolation voltage	**ADAM-4051:** 2500 V_{DC} **ADAM-4052:** 5000 VRMS
Over-voltage protect	70 V_{DC} **(ADAM-4051 only)**
Support protocol	**ADAM-4051:** ADAM ASCII and MODBUS/RTU **ADAM-4052:** ADAM ASCII
Watchdog timer	**ADAM-4051:** System (1.6 second) and communication **ADAM-4052:** System (1.6 second)
Power supply	+10 to +30 V_{DC} (non-regulated)
Power consumption	**ADAM-4051:** 1.0 W @ 24 V_{DC} **ADAM-4052:** 0.4 W @ 24 V_{DC}

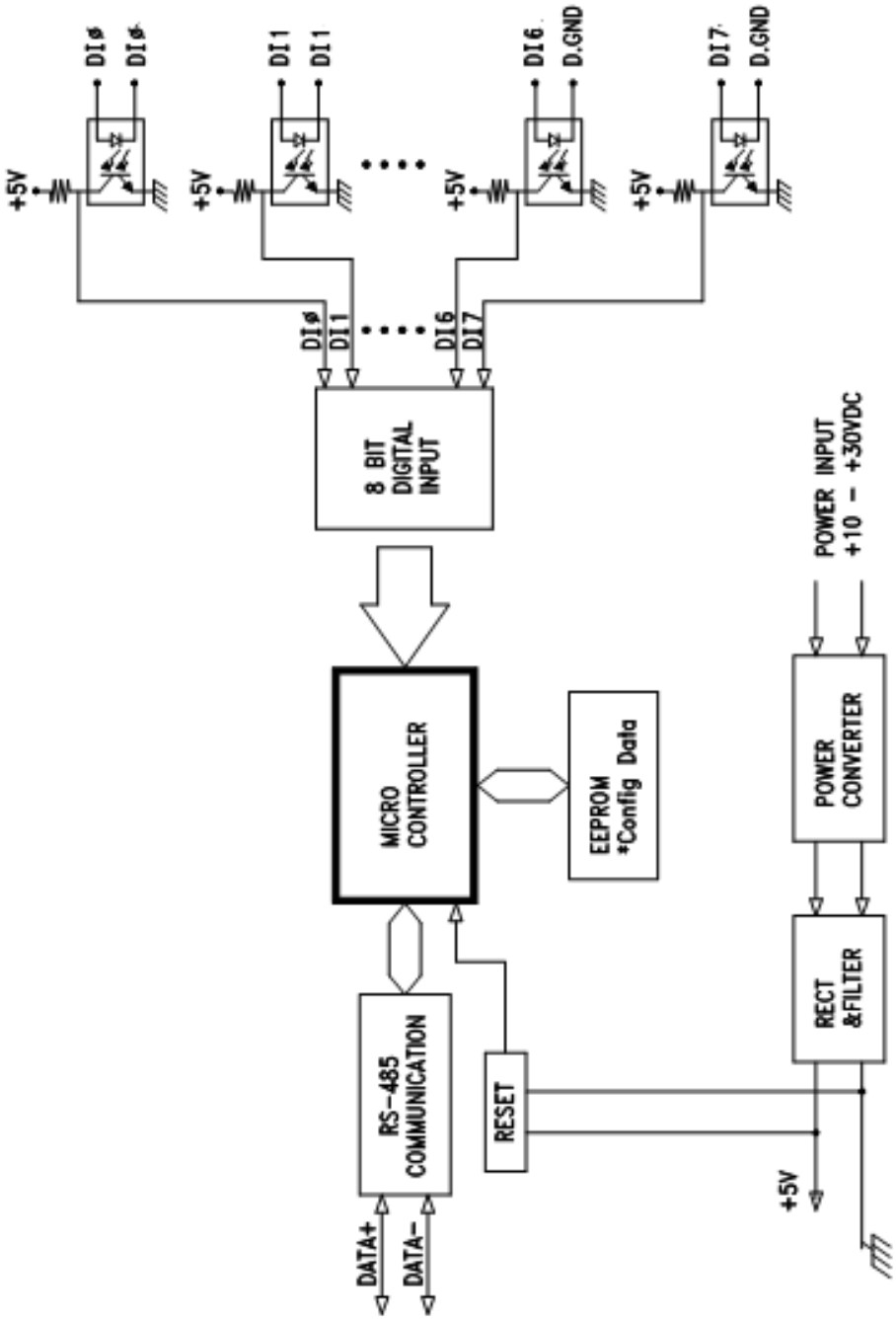

Figure A.13 ADAM-4051/4052 Function Diagram

A.13 ADAM-4053 16-channel Digital Input Module

Table A.17: ADAM-4053 Specifications	
DI/O channel number	16 digital inputs
Input/Output speed (bps) Maximum distance	RS-485 (2-wire) 1200, 2400, 4800, 9600, 19.2K, 38.4K, 57.6K, 115.2K 4000 ft. (1200 m)
Digital input level **Dry Contact:** logic level 0: logic level 1: **Wet Contact:** logic level 0: logic level 1:	 Close to GND Open +2V maximum +4 to +30 V
Effective distance (Dry contact only)	500 m maximum
Support protocol	ADAM ASCII
Watchdog timer	1.6 second (System)
Power supply	+10 to +30 V_{DC} (non-regulated)
Power consumption	1.0 W @ 24 V_{DC}

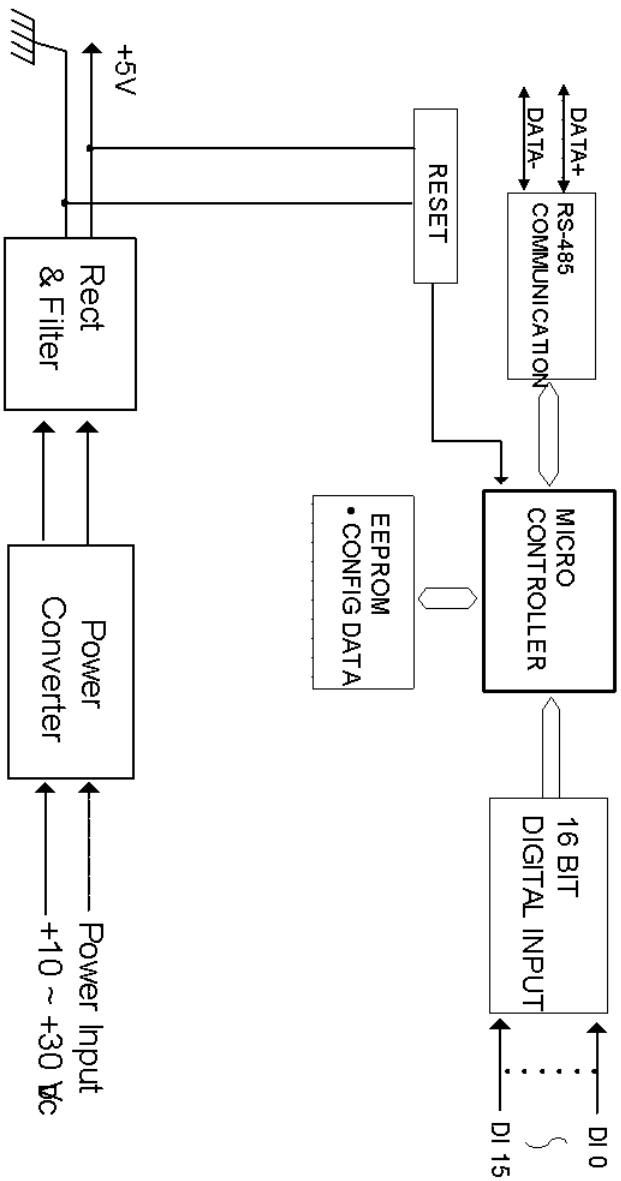

Figure A.14 ADAM-4053 Function Diagram

A.14 ADAM-4055 Isolated Digital Input/Output Module

Table A.18: ADAM-4055 Isolated Digital Input/Output Module	
DI/O channel number	8 digital inputs 8 digital outputs
Input/Output speed (bps) Maximum distance	RS-485 (2-wire) 1200, 2400, 4800, 9600, 19.2K, 38.4K, 57.6K, 115.2K 4000 ft. (1200 m)
Isolation voltage	2500 V_{DC}
Opto-isolator response time	25 µs
Over-voltage protect	70 V_{DC}
ESD (Electro Static Discharge)	2000 V_{DC}
Digital input level **Dry Contact:** Logic level 0: Logic level 1: **Wet Contact:** Logic level 0: Logic level 1:	 Open Close to GND +3V maximum +10 to 50V
Digital output Sink-current Power dissipation	Open collector to 40 V 200 mA maximum Channel: 1W maximum Total: 2.2W (8 channels)
LED Indicator:	On: Active Off: Non-active
Support protocol	ADAM ASCII and MODBUS/RTU
Watchdog timer	System (1.6 second) and communication
Power supply	+10 to +30 V_{DC} (non-regulated)
Power consumption	1.0 W @ 24 V_{DC}

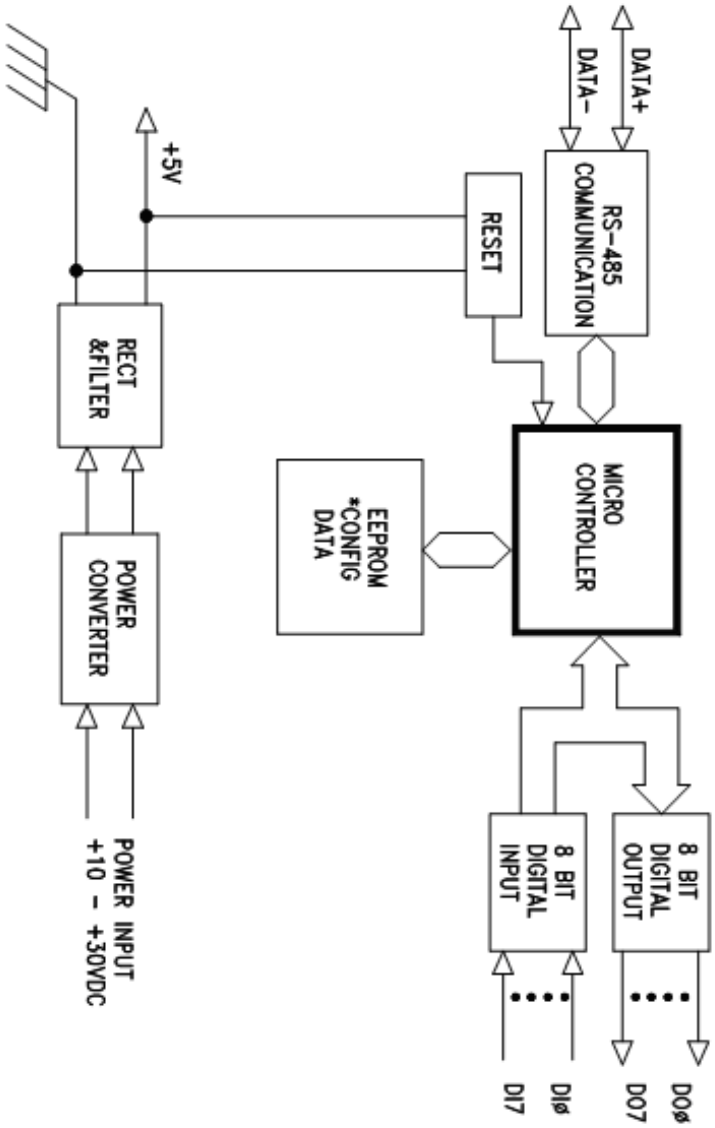

Figure A.15 ADAM-4055 Function Diagram

A.15 ADAM-4056S 12-channel Sink Type Isolated Digital Output Module

Table A.19: ADAM-4056S Specifications	
DO channel number	12 digital outputs (sink type)
Input/Output speed (bps) Maximum distance	RS-485 (2-wire) 1200, 2400, 4800, 9600, 19.2K, 38.4K, 57.6K, 115.2K 4000 ft. (1200 m)
Digital output Power dissipation	Open Collector to +40V 200 mA maximum Channel: 1W maximum Total: 2.2W (8 channels)
Isolation voltage	5000 V_{DC}
Support protocol	ADAM ASCII and MODBUS/RTU
LED Indicator	On: Active Off: Non-active
Watchdog timer	System (1.6 second) and communication
Power supply	+10 to +30 V_{DC} (non-regulated)
Power consumption	1.0 W @ 24 V_{DC}

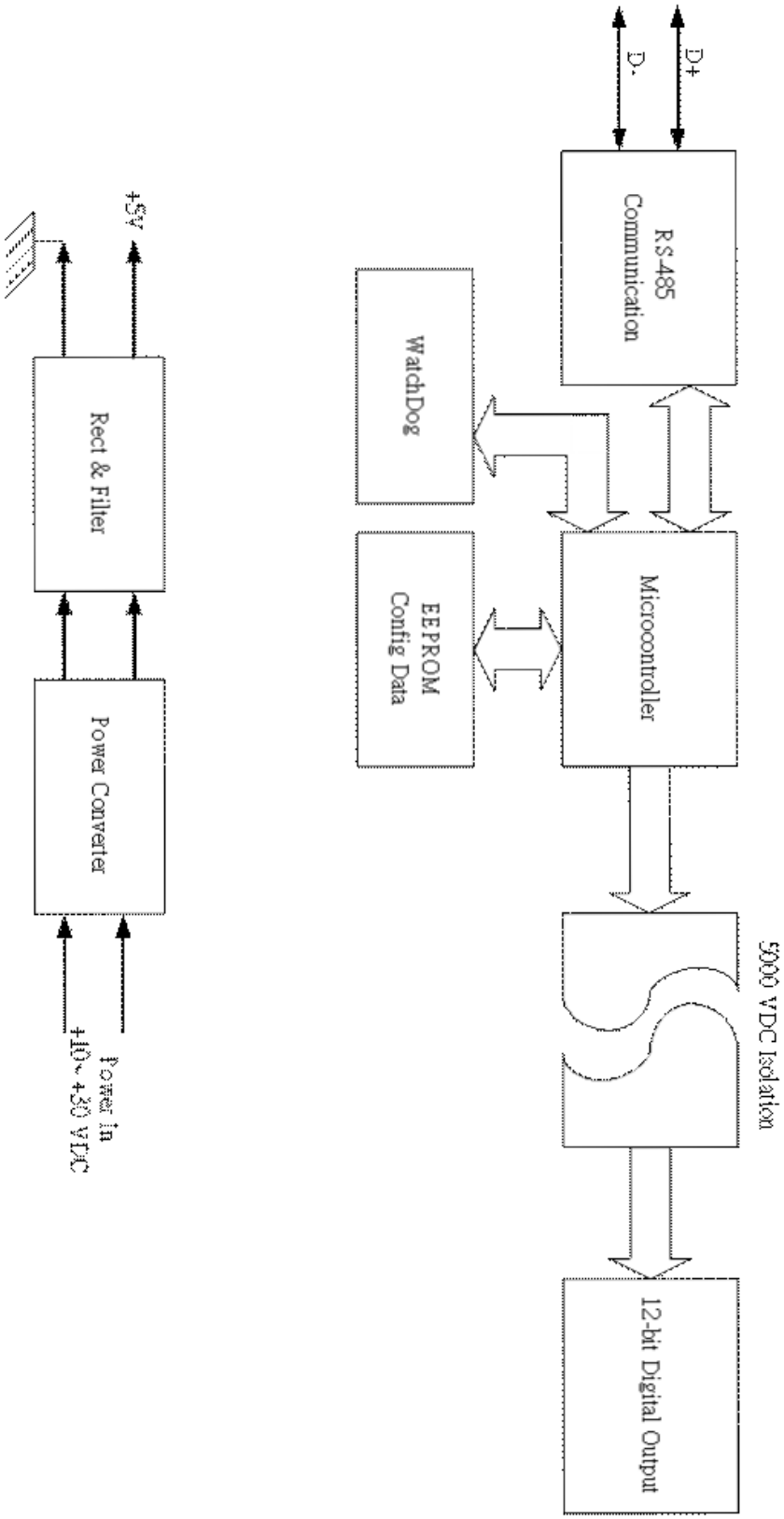

Figure A.16 ADAM-4056S Function Diagram

A.16 ADAM-4056SO 12-channel Source Type Isolated Digital Output Module

Table A.20: ADAM-4056SO Specifications	
DO channel number	12 digital outputs (source type)
Input/Output speed (bps) Maximum distance	RS-485 (2-wire) 1200, 2400, 4800, 9600, 19.2K, 38.4K, 57.6K, 115.2K 4000 ft. (1200 m)
Digital output	VCC: +10~ +35V 1A (per Channel)
Isolation voltage	5000 V_{DC}
Support protocol	ADAM ASCII and MODBUS/RTU
LED Indicator	On: Active Off: Non-active
Watchdog timer	System (1.6 second) and communication
Power supply	+10 to +30 V_{DC} (non-regulated)
Power consumption	1.0 W @ 24 V_{DC}

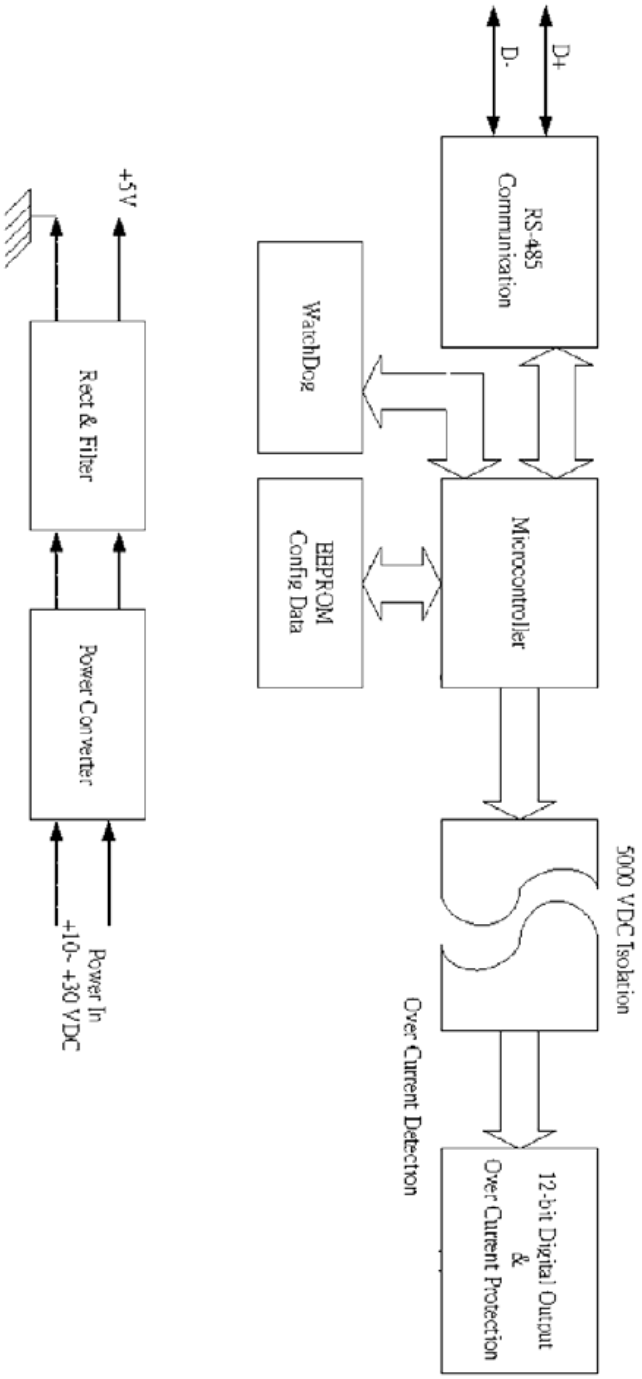

Figure A.17 ADAM-4056SO Function Diagram

A.17 ADAM-4060 Relay Output Module

Table A.21: ADAM-4060 Specifications	
DO channel number	4 channel relay (2 form A, 2 form C)
Input speed (bps) Maximum distance	RS-485 (2-wire) 1200, 2400, 4800, 9600, 19.2K, 38.4K, 57.6K, 115.2K 4000 ft. (1200 m)
Contact rating (Resistive)	AC: 0.6 A @ 125 V 0.3 A @ 250 V DC: 2 A @ 30 V 0.6 A @ 110 V
Breakdown voltage	500 VAC (50/60 Hz)
Relay on time (typical)	3 ms
Relay off time (typical)	2 ms
Total switching time	10 ms
Insulation resistance	1 GΩ minimum at 500 V_{DC}
Support protocol	ADAM ASCII
Watchdog timer	1.6 second (System)
Power supply	+10 to +30 V_{DC} (non-regulated)
Power consumption	0.8 W @ 24 V_{DC}

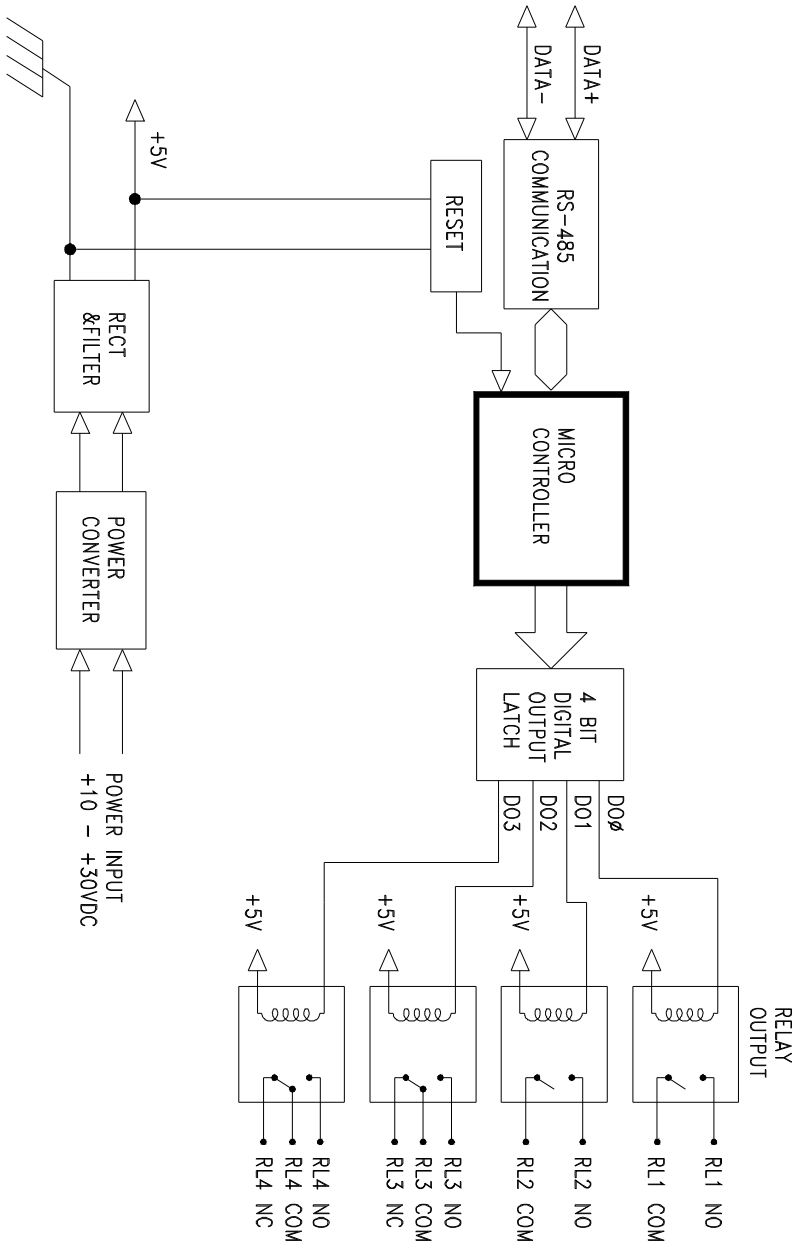

Figure A.18 ADAM-4060 Function Diagram

A.18 ADAM-4068/4069 8-channel Relay Output Module

Table A.22: ADAM-4068/4069 Specifications	
DO channel number	8 channel relay (4 form A, 4 form C)
Contact rating (Resistive)	**ADAM-4068:** AC: 0.6A @ 125V 0.3A @ 250V DC: 2A @ 30V 0.6 @ 110V **ADAM-4069:** AC: 5A @ 240V DC: 5A @ 30V
Breakdown voltage	**ADAM-4068:** 500 VAC (50/60 Hz) **ADAM-4069:** 1000 VAC (50/60 Hz)
Insulation resistance	1 GΩ minimum at 500 V_{DC}
Relay on time (typical)	**ADAM-4068:** 3 ms **ADAM-4069:** 5 ms
Relay off time (typical)	**ADAM-4068:** 4 ms **ADAM-4069:** 5.6 ms
Support protocol	ADAM ASCII and MODBUS/RTU
Watchdog timer	System (1.6 second) and communication
Power supply	+10 to +30 VDC (non-regulated)
Power consumption	**ADAM-4068:** 0.6 W @ 24 V_{DC} **ADAM-4069:** 2.2 W @ 24 V_{DC}

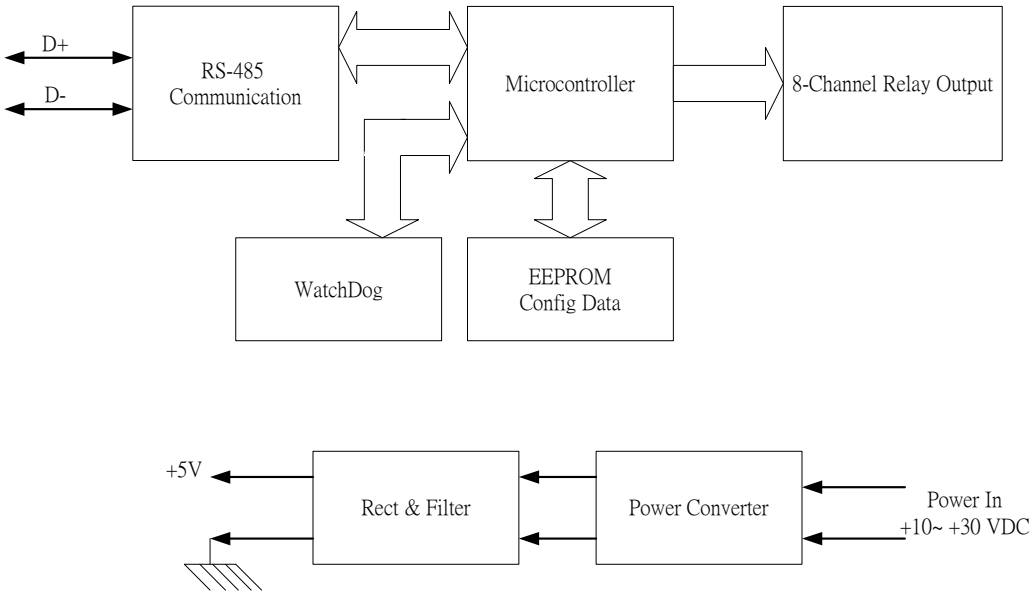

Figure A.19 ADAM-4068/4069 Function Diagram

A.19 ADAM-4080 Counter/Frequency Input Module

Table A.23: ADAM-4080 Specifications	
Input channel number	2 independent 32-bit counters
Input frequency	50 kHz maximum
Input mode	Isolated or non-isolated
Isolation input level Logic level 0 Logical level 1	 +1 V maximum +3.5 V to +30 V
Isolation voltage	2500 VRMS
Non-isolation input level Logic level 0 Logic level 1	Programmable threshold 0 to +5 V (default = 0.8 V) 0 to +5 V (default = 2.4 V)
Input pulse width	>10 µsec
Maximum count	4,294,967,295 (32 bits)
Programmable digital noise filter	2 µsec to 65 msec
Alarming	Alarm comparators on each counter
Preset type	Absolute or relative
Frequency measurement Range Programmable built-in gate time	5 Hz to 50 KHz 1.0/0.1 sec
Digital output channels Sink current Power dissipation	2 channels open collector to 30 V 30 mA max. load 300 mW
Support protocol	ADAM ASCII
Watchdog timer	1.6 second (System)
Power requirements	+10 to +30 V_{DC} (non-regulated)
Power consumption	2.0 W@ 24 V_{DC}

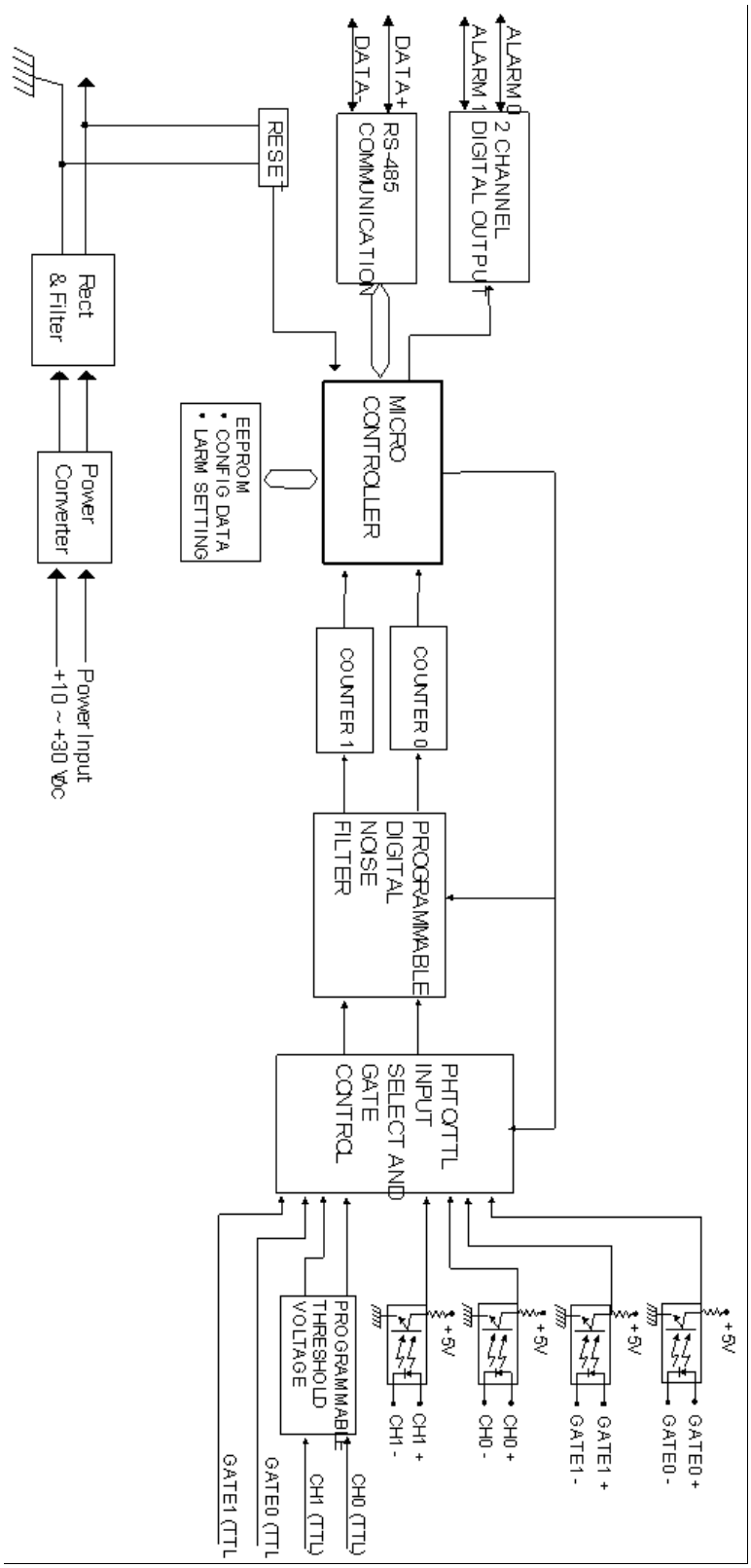

Figure A.20 ADAM-4080 Function Diagram

A.20 ADAM-4080D Counter/Frequency Input Module with LED Display

Table A.24: ADAM-4080D Specifications	
Input channels	2 independent 32-bit counters
Input frequency	50 kHz maximum
Input mode	Isolated or non-isolated
Isolation input level Logic level 0 Logical level	 +1 V max +3.5 V to +30 V
Isolation voltage	2500 VRMS
Non-isolation input level Logic level 0 Logic level 1	Programmable threshold 0 to +5 V (default = 0.8 V) 0 to +5 V (default = 2.4 V)
Input pulse width	>10 µsec
Maximum count	4,294,967,295 (32 bits)
Programmable digital noise filter	2 µsec to 65 msec
Alarming	High and Low comparators on counter 0
Frequency Measurement Range Programmable built-in gate time	5 Hz to 50 KHz 1.0/0.1 sec
Display	LED indicator 5-digit readout; CH 0 or CH 1 (programmable)
Digital Output Channels Sink current Power dissipation	2 channels Open collector to 30 V 30 mA max. load 300 mW
Support protocol	ADAM ASCII
Watchdog timer	1.6 second (System)
Power requirements	+10 to +30 V_{DC} (non-regulated)
Power consumption	2.0 W @ 24 V_{DC}

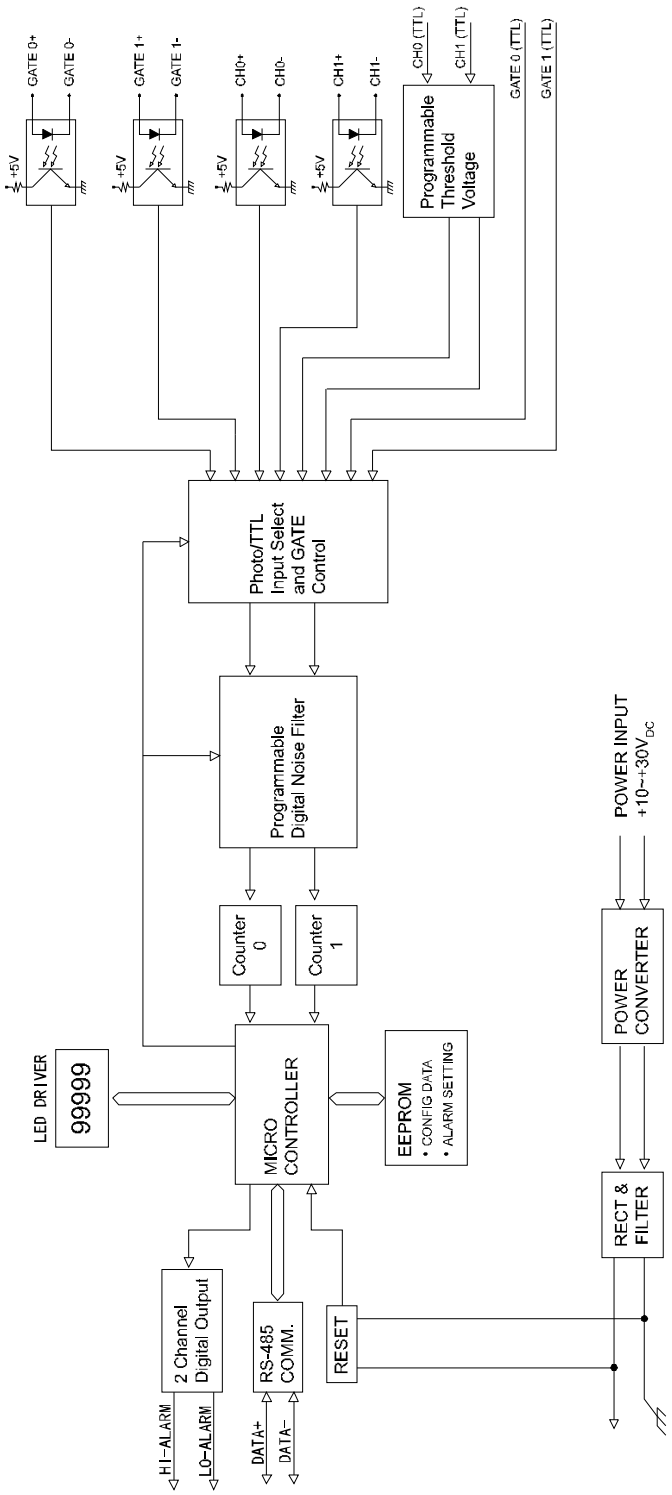

Figure A.21 ADAM-4080D Function Diagram

Appendix B

Data Formats and I/O Ranges

B.1 Analog Input Formats

The ADAM analog input modules can be configured to transmit data to the host in one of the following data formats:

- Engineering Units
- Percent of FSR
- Twos complement hexadecimal
- Ohms

B.1.1 Engineering Units

Data can be represented in engineering units by assigning bits 0 and 1 of the data format/checksum/integration time parameter with value 00.

This format presents data in standard units such as degrees, volts, millivolts and milliamps. When the value in engineering format is converted to computer language, it is presented in seven characters. These characters may include sign and decimals. However, the number of characters can not exceed seven.

Data is grouped into a plus (+) or minus (-) sign, followed by five decimal digits and a decimal point. The input range which is employed determines the resolution or the number of decimal places used as illustrated in the following examples:

Example 1

The input value is -2.65 and the corresponding analog input module is configured for a range of ±5 V. The response to the Analog Data In command is: -2.6500 (cr)

Example 2

The input value is 305.5°C, and the analog input module is configured for a type J thermocouple whose range is (0°C to 760°C). The response to the Analog Data In command is: +305.50 (cr)

Example 3

The input value is +5.653 V. The analog input module is configured for a ±5 V range. When the engineering unit format is used, the ADAM Series analog input modules are configured so that they automatically provide an over-range capability. The response to the Analog Data In command in this case is: +5.6530 (cr)

B.1.2 Percent of FSR

This mode is used by setting bits 0 and 1 of the data format/checksum /integration time parameter to 01. The format used in Percent of FSR consists of a plus (+) or minus (-) sign followed by five decimal digits including a decimal point. The maximum possible resolution is 0.01% with the decimal point fixed.

Data are given as the ratio of the input signal to the full-scale range.

Example 1

The input value is +2.0 V. The input module is configured for a range of ±5 V. The response to the Analog Data In command is as follows: +040.00 (cr)

The full calibrated voltage range ranges from -100% to 100% as voltage input ranges are always bipolar. A ±5 V input would range from -5 V (-100%) to 5 V (100%).

In this example the input is represented by +40% of the full-scale range which equals to (+(40/100) x 5 V = +2.0 V) the actual input value.

Example 2

The input value is 652.5o C, and a type E thermocouple (0°C to 1000°C) is configured in the analog input module. The response to the Analog Data In command is: +065.25 (cr)

The result shows that the value of the input (652.5°C) is 65.25% of the full-scale range (1000°C).

Thermocouple input ranges are always assumed to be bipolar with zero being the point of symmetry. This holds true regardless of the specified range of operation. For example, when we use a type J thermocouple (0°C to 760°C), 760°C corresponds to +100% and 0°C corresponds to 0%. Even if 0°C lies outside of the specified operation range for the thermocouple, zero will remain as the point of symmetry. For instance, a type B thermocouple is specified for operation from +500°C to +1800°C. In this case +1800°C corresponds to + 100% and 500°C corresponds to +27.77%.

The percentage is related to the full span of the configured range. For instance, a nickel RTD is specified for -80°C to +100°C. Then, the lower value of -80°C equals to 0% of span and the upper value of +100°C equals to 100% of span.

In the FSR mode, an over-range feature is automatically invoked by the ADAM analog input modules if the value exceeds the uppermost value of the input range. For instance, an analog module which is configured for a ±5 V range has one of the values reading + 5.5V. The resulting value would then be 110%.

The readings must fall within the input range for accuracy assurance. Although they are typically linear readings, anything which falls between ±100% and ±115% limits may not be accurate. Furthermore, readings beyond these limits are neither accurate nor linear.

B.1.3 Twos complement hexadecimal

Twos Complement Hexadecimal format presents the data in ASCII hexadecimal form providing a rapid communication, high resolution and easy conversion to computer-compatible integer format.

In order to indicate twos complement hexadecimal, bits 0 and 1 of the data format/ checksum/integration time parameter must be set to 10. This format displays data in the form of a 4-character hexadecimal string.

This string represents a 16-bit twos complement binary value. Positive full scale is denoted as 7FFF (+32,767) while negative full scale is represented by the value 8000 (-32,768). The resolution is digit one at the least significant bit (LSB) of 16 bits.

Example

The input value is -1.234 V. An analog input module is configured for a ±5 V range. The value returned is: E069 (cr)

This value is equivalent to the signed integer -8087.

Input ranges with voltage and milliamp values are used with the full calibrated voltage range from 8000 to 7FFF. For instance, an ADAM-4011 module is given a ±5 V input range. In this case, -5 V is represented as 8000h and +5 V is denoted as 7FFFh.

When thermocouple input ranges are used, an input range which is bipolar and symmetric at zero is assumed. The following table provides several examples.

Thermocouple Type	Temperature Range (Degrees)	Temperature Range (Hex)
J	0° C to 760° C	0000h - 7FFFh
T	-100° C to 400° C	E000h - 7FFFh
R	500° C to 1750° C	2492h - 7FFFh

The given span of the specified range is used to determine the RTD input ranges for twos complement hexadecimal values. For an example, if the nickel RTD is specified for the range -80°C to +100°C, the corresponding values in hexadecimal notation would be 8000h to 7FFFh.

B.1.4 Ohms

To indicate ohms, set bits 0 and 1 of the data format/checksum/integration time parameter to 11.

The ohms format allows you to read the value of the RTD resistance in ohms. It consists of a “+” or “-” sign followed by five decimal digits and a decimal point. The resolution (position of the decimal point) of Platinum-Nickel RTDs is 10 m Ω. (two decimal places).

For example, a 100 Ω platinum RTD specified for -100°C to +100°C has +100°C corresponding to +138.50 Ω and -100o C corresponding to +060.60 Ω.

The measurable resistance values are as given below:

The format is **Type, Bottom Tem. (ohm) ~ Top Temp. (ohm)**

BA1	-200(7.95) ~ 600(145.85)
PT-100 (0.385)	-50(80.31) ~ +150(157.31)
PT-100 (0.392)	-50(79.96) ~ +150(158.29)
PT-100 (0.385)	0(100.00) ~ +100(138.50)
PT-100 (0.392)	0(100.00) ~ +100(139.16)
PT-100 (0.385)	0(100.00) ~ +200(175.84)
PT-100 (0.392)	0(100.00) ~ +200(177.13)
PT-100 (0.385)	0(100.00) ~ +400(247.04)
PT-100 (0.392)	0(100.00) ~ +400(249.56)
PT-100 (0.385)	-200(18.49) ~ +200(175.84)
PT-100 (0.392)	-200(18.49) ~ +200(177.13)
PT-1000	-40(842.7) ~ +160(1610.4)
Balco-500	-30(397.05) ~ +120(723.44)
Ni604-518	-80(410.73) ~ +100(917.33)
Ni604-518	0(604) ~ +100(917.33)
Ni508A	0(507) ~ 100(772)
Ni508B	-50(400.14) ~ 200(1099.89)

B.2 Analog Input Ranges

Range Code (hex)	Input Range Description	Data Formats	+F.S.	Zero	-F.S.	Displayed Resolution
00	± 15 mV	Engineering Units	+15.000	±00.000	-15.000	1 µv
		% of FSR	+100.00	±000.00	-100.00	0.01%
		Twos Complement	7FFF	0000	8000	1 LSB*
01	± 50 mV	Engineering Units	+50.000	±00.000	-50.000	1 µv
		% of FSR	+100.00	±000.00	-100.00	0.01%
		Twos Complement	7FFF	0000	8000	1 LSB*
02	± 100 mV	Engineering Units	+100.00	±000.00	-100.00	10 µv
		% of FSR	+100.00	±000.00	-100.00	0.01%
		Twos Complement	7FFF	0000	8000	1 LSB*
03	± 500 mV	Engineering Units	+500.00	±000.00	-500.00	10 µv
		% of FSR	+100.00	±000.00	-100.00	0.01%
		Twos Complement	7FFF	0000	8000	1 LSB*
04	± 1 V	Engineering Units	+100.00	±0.0000	-1.0000	100.00 µv
		% of FSR	+100.00	±000.00	-100.00	0.01%
		Twos Complement	7FFF	0000	8000	1 LSB*
05	± 2.5 V	Engineering Units	+2.5000	±0.0000	-2.5000	100.00 µv
		% of FSR	+100.00	±000.00	-100.00	0.01%
		Twos Complement	7FFF	0000	8000	1 LSB*
06	± 20 mV	Engineering Units	+20.000	±00.000	-20.000	1 µv
		% of FSR	+100.00	±000.00	-100.00	0.01%
		Twos Complement	7FFF	0000	8000	1 LSB*
07	± 4~20mA	Engineering Units	+20.000	±00.000	-20.000	1 µA
		% of FSR	+100.00	±000.00	-100.00	0.01%
		Twos Complement	7FFF	0000	8000	1 LSB*
08	± 10 mV	Engineering Units	+10.000	±00.000	-10.000	Resolution
		% of FSR	+100.00	±000.00	-100.00	1 µv
		Twos Complement	7FFF	0000	8000	0.01%

Range Code (hex)	Input Range Description	Data Formats	+F.S.	Zero	-F.S.	Displayed Resolution
09	± 5 V	Engineering Units	+5.0000	±0.0000	-5.0000	1 LSB*
		% of FSR	+100.00	±000.00	-100.00	100.00 µv
		Twos Complement	7FFF	0000	8000	0.01%
0A	± 1 V	Engineering Units	+1.0000	±0.0000	-1.000	1 LSB*
		% of FSR	+100.00	±000.00	-100.00	100.00 µv
		Twos Complement	7FFF	0000	8000	0.01%
0B	± 500 mV	Engineering Units	+500.00	±000.00	-500.00	1 LSB*
		% of FSR	+100.00	±000.00	-100.00	10 µv
		Twos Complement	7FFF	0000	8000	0.01%
0C	± 150 mV	Engineering Units	+150.00	±000.00	-150.00	1 LSB*
		% of FSR	+100.00	±000.00	-100.00	10 µv
		Twos Complement	7FFF	0000	8000	0.01%
0D	± 20 mV	Engineering Units	+20.000	±00.000	-20.000	1 LSB*
		% of FSR	+100.00	±000.00	-100.00	1 µv
		Twos Complement	7FFF	0000	8000	0.01%

Range Code (hex)	Input Range Description	Data Formats	Maximum Specified Signal	Minimum Speciated Signal	Displayed Resolution
0E	Type J Thermocouple 0°C to 760°C	Engineering Units	+760.000	+000.00	0.01°C
		% of FSR	+100.00	+000.00	0.01%
		Twos Complement	7FFF	0000	1 LSB*
0F	Type K Thermocouple 0°C to 1370°C	Engineering Units	+1370.0	+0000.0	0.1°C
		% of FSR	+100.00	+000.00	0.01%
		Twos Complement	7FFF	0000	1 LSB*
10	Type T Thermocouple -100°C to 400°C	Engineering Units	+400.00	-100.00	0.01°C
		% of FSR	+100.00	-0.25.00	0.01%
		Twos Complement	7FFF	E000	1 LSB*
11	Type E Thermocouple 0°C to 1000°C	Engineering Units	+1000.0	+0000.0	0.1°C
		% of FSR	+100.00	+000.00	0.01%
		Twos Complement	7FFF	0000	1 LSB*
12	Type R Thermocouple 500°C to 1750°C	Engineering Units	+1750.0	+0500.0	0.1°C
		% of FSR	+100.00	+028.57	0.01%
		Twos Complement	7FFF	2492	1 LSB*
13	Type S Thermocouple 500°C to 1750°C	Engineering Units	+1750.0	+0500.0	0.1°C
		% of FSR	+100.00	+028.57	0.01%
		Twos Complement	7FFF	2492	1 LSB*
14	Type B Thermocouple 500°C to 1800°C	Engineering Units	+1800.0	+0500.0	0.1°C
		% of FSR	+100.00	+027.77	0.01%
		Twos Complement	7FFF	2381	1 LSB*
20	100.00 Ω Platinum RTD α = .00385 -100°C to 100°C	Engineering Units	+100.00	-100.000	0.1°C
		% of FSR	+100.00	+000.00	0.01%
		Twos Complement	7FFF	8000	1 LSB*
		Ohms	+138.50	+060.60	10 mΩ
21	100.00 Ω Platinum RTD α = .00385 0°C to 100°C	Engineering Units	+100.000	+000.00	0.1°C
		% of FSR	+100.00	+000.00	0.01%
		Twos Complement	7FFF	0000	1 LSB*
		Ohms	+138.50	+100.00	10 mΩ

Range Code (hex)	Input Range Description	Data Formats	Maximum Specified Signal	Minimum Specified Signal	Displayed Resolution
22	100.00 Ω Platinum RTD α = .00385 0°C to 200°C	Engineering Units	+200.00	+000.00	0.01°C
		% of FSR	+100.00	+000.00	0.01%
		Twos Complement	7FFF	0000	1 LSB*
		Ohms	+175.84	+100.00	10 mΩ
23	100.00 Ω Platinum RTD α = .00385 0°C to 600°C	Engineering Units	+600.00	+000.00	0.01°C
		% of FSR	+100.00	+000.00	0.01%
		Twos Complement	7FFF	0000	1 LSB*
		Ohms	+313.59	+100.00	10 mΩ
24	100.00 Ω Platinum RTD α = .00392 -100°C to 100°C	Engineering Units	+00.00	-100.00	0.01°C
		% of FSR	+100.00	+000.00	0.01%
		Twos Complement	7FFF	8000	1 LSB*
		Ohms	+139.16	+060.60	10 mΩ
25	100.00 Ω Platinum RTD α = .00392 0°C to 100°C	Engineering Units	+100.00	+000.00	0.01°C
		% of FSR	+100.00	+000.00	0.01%
		Twos Complement	7FFF	0000	1 LSB*
		Ohms	+139.16	+100.00	10 mΩ
26	100.00 Ω Platinum RTD α = .00392 0°C to 200°C	Engineering Units	+200.00	+000.00	0.01°C
		% of FSR	+100.00	+000.00	0.01%
		Twos Complement	7FFF	0000	1 LSB*
		Ohms	+177.13	+100.00	10 mΩ
27	100.00 Ω Platinum RTD α = .00392 0°C to 600°C	Engineering Units	+600.00	+000.00	0.01°C
		% of FSR	+100.00	+000.00	0.01%
		Twos Complement	7FFF	0000	1 LSB*
		Ohms	+317.28	+100.00	10 mΩ
28	120 Ω Nickel RTD -80°C to 100°C	Engineering Unit	+100.000	-80.00	0.01°C
		% of FSR	+100.00	+000.00	0.01%
		Twos Complement	7FFF	8000	1 LSB*
		Ohms	+200.64	+066.60	10 mΩ
29	100.00 Ω Nickel RTD α = .00392 0°C to 100°C	Engineering Unit	+100.000	+000.00	0.01°C
		% of FSR	+100.00	+000.00	0.01%
		Twos Complement	7FFF	0000	1 LSB*
		Ohms	+200.64	+120.00	10 mΩ

Note! ** Resolution is one LSB of 16 bits*

B.3 Analog Output Formats

You can configure ADAM analog output modules to receive data from the host in one of the following data formats:

- Engineering Units
- Percent of FSR
- Twos complement hexadecimal

Data for ADAM modules can be used in any one of the following data formats:

B.3.1 Engineering Units

This format is chosen by setting bits 0 and 1 of the data format/slew rate/checksum parameter to 00.

Data are presented in natural units such as milliamps. When the value in engineering format is converted to computer language, it is presented in six characters. These characters are ordered as two decimal digits, a decimal point, and then three decimal digits. As a result, the resolution is 5 µA.

For example, an analog output module (address 01h) is configured for a 0 to 20 mA range. If the output value is + 4.762 mA, the format of the Analog Data Out command would be #0104.762(cr).

B.3.2 Percent of Span

The Percent of Span format is employed by setting bits 0 and 1 of the data format/ slew rate/checksum parameter to 01.

This format consists of a “+” or “-” sign, three decimal digits, a decimal point and two decimal digits. Data are presented as the value sent by the output signal relative to the span of the output (percent of span).

The maximum resolution is 0.2% of the span (5 µA for the 0 to 20 mA output range); therefore, the desired output value is 10 mA. The format of the Analog Data Out command is as follows:

#01+050.00 (cr). It indicates that the output is at 50% of the span, and the decimal point is fixed.

B.3.3 Hexadecimal

This format is selected by setting bits 0 and 1 of the data format/slew rate/checksum parameter to 10.

ASCII’s condensed hexadecimal representation of data provides high resolution. The format consists of a 3-character hexadecimal string representing a 12-bit binary value. The resolution for the 0 to 20mA output range equals to .025% of the span, which is also equivalent to 5µA. The corresponding value for 000 is 0mA; likewise, the value FFF corresponds to 20mA.

B.4 Analog Output Ranges

Range Code (hex)	Input Range Description	Data Formats	Maximum Specified Signal	Minimum Speciated Signal	Output Resolution
30	0 to 20 mA	Engineering Units	20.000	00.000	5 µA
		% of FSR	+100.00	+000.00	5 µA
		Hexadecimal Binary	FFF	000	5 µA
31	4 to 20 mA	Engineering Units	20.000	04.000	5 µA
		% of FSR	+100.00	+000.00	5 µA
		Hexadecimal Binary	FFF	000	5 µA
32	0 to 10 V	Engineering Units	20.000	00.000	2.442 mA
		% of FSR	+100.00	+000.00	2.442 mA
		Hexadecimal Binary	FFF	000	2.442 mA

Appendix C

Technical Diagrams

C.1 ADAM Dimensions

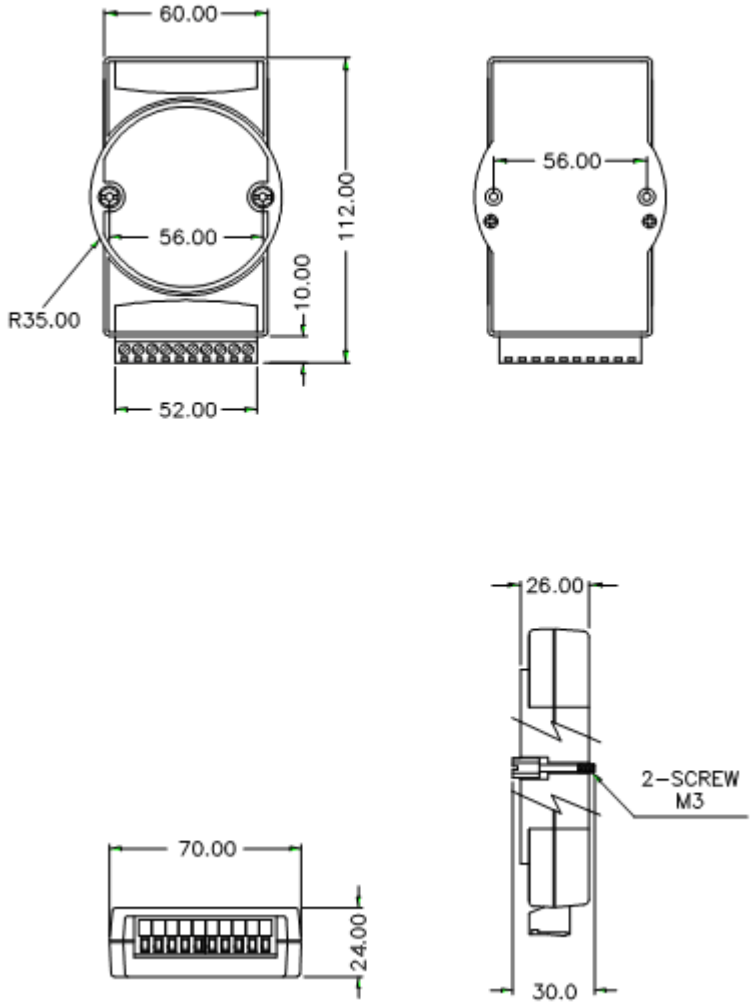

Figure C.1 ADAM Modules Dimensions

C.2 Installation

C.2.1 DIN-Rail Mounting

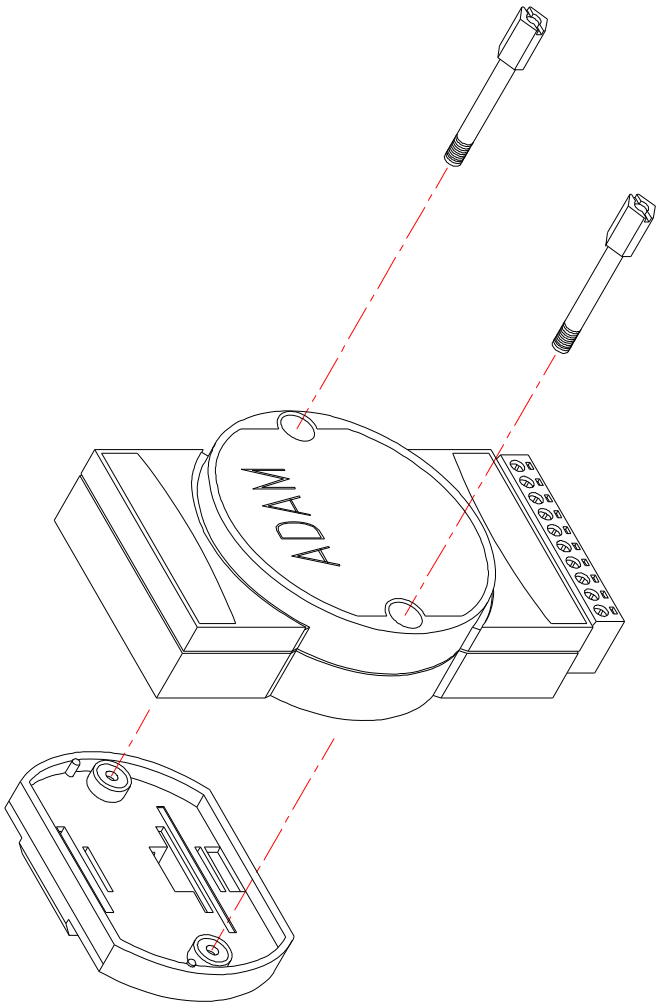

Figure C.2 DIN-Rail Adapter

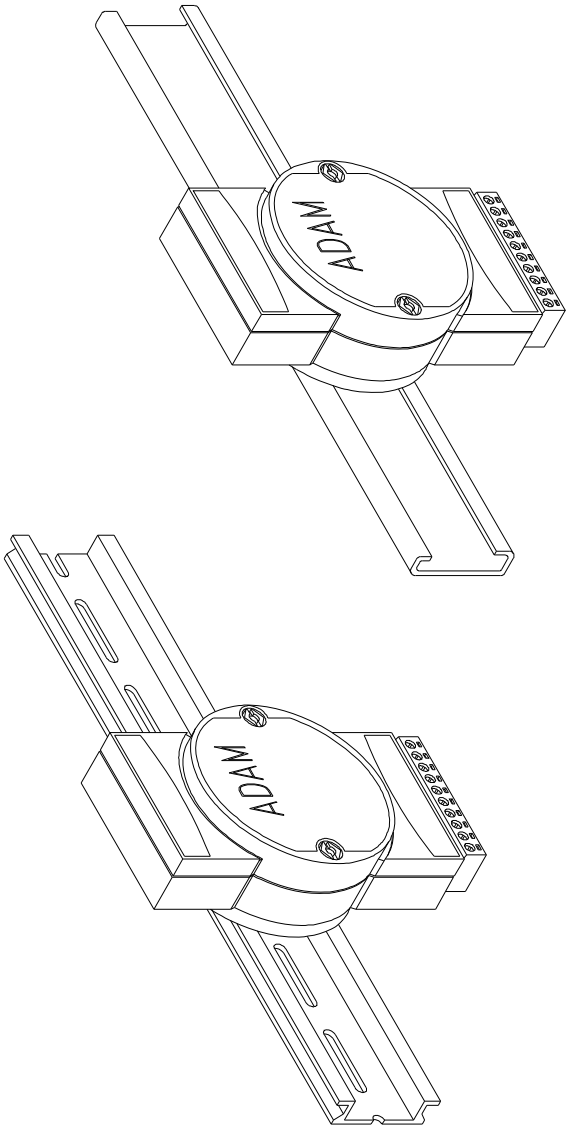

Figure C.3 DIN-Rail Mounting

C.2.2 Panel Mounting

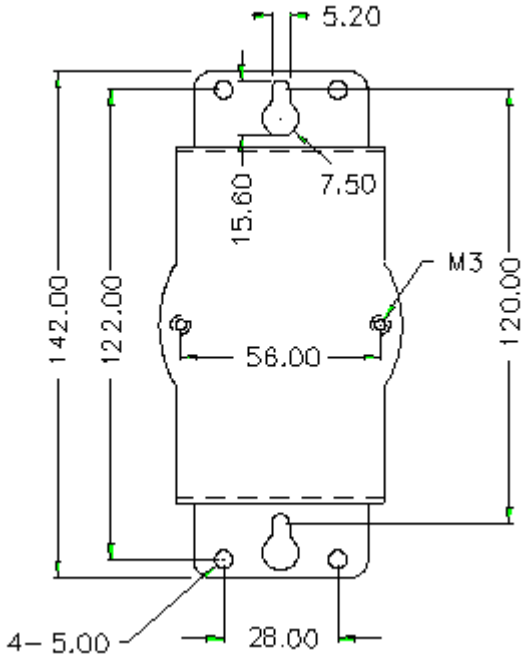

Figure C.4 Panel Mounting Bracket Dimensions

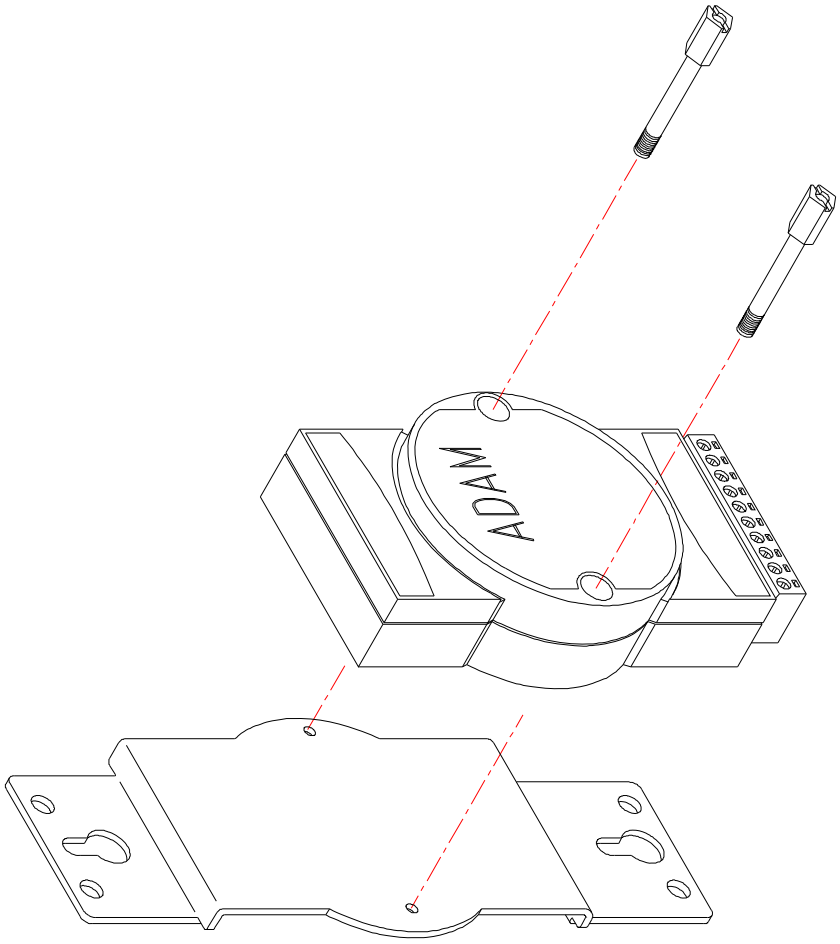

Figure C.5 Panel Mounting

C.2.3 Piggyback Stack

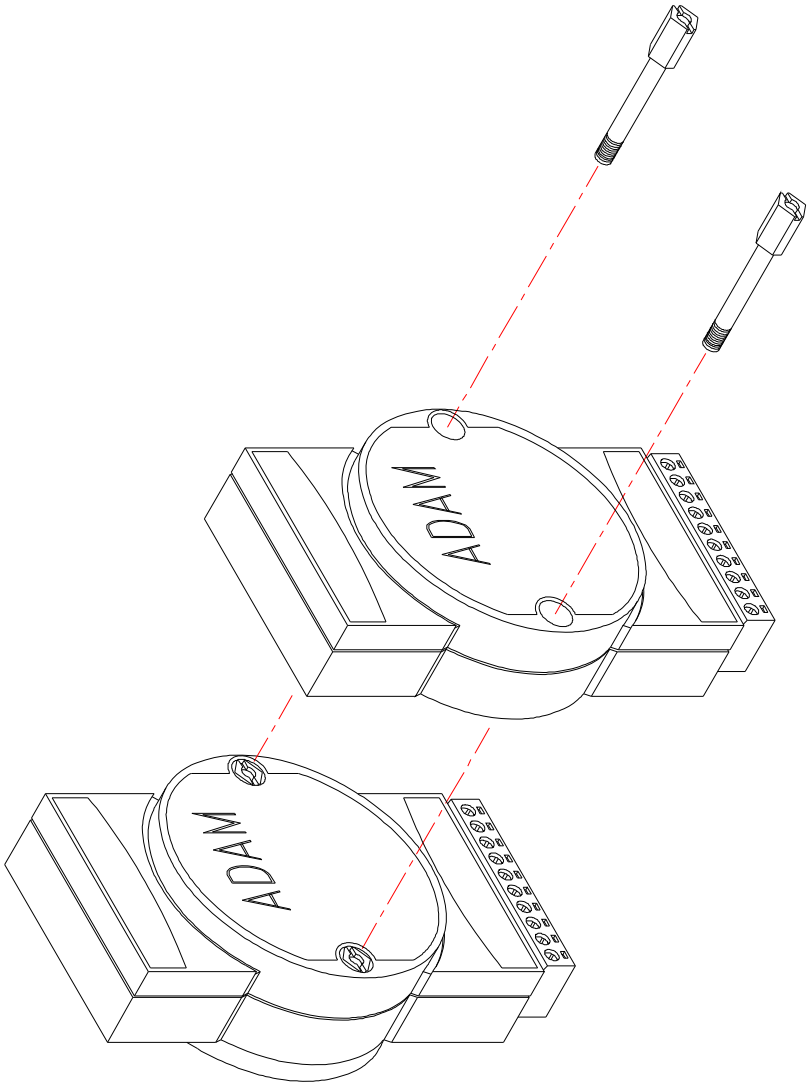

Figure C.6 Piggyback Stack

Appendix D

Utility Software

D.1 ADAM-4000 Utility Software

Together with the ADAM modules you will find a utility disk containing utility software with the following capabilities:

- Module configuration
- Module calibration
- Data Input and Output
- Alarm settings
- Autoscan of connected modules
- Terminal emulation

The following text will give you a brief instruction how to use the program.

Search the installed modules

The main screen consists of a menu bar at the top side of the screen and a status field which displays information about the connected modules. When the modules are connected well, you have to start the program and search the modules by clicking the search icon as below. Please do check the COM port and related settings are correct.

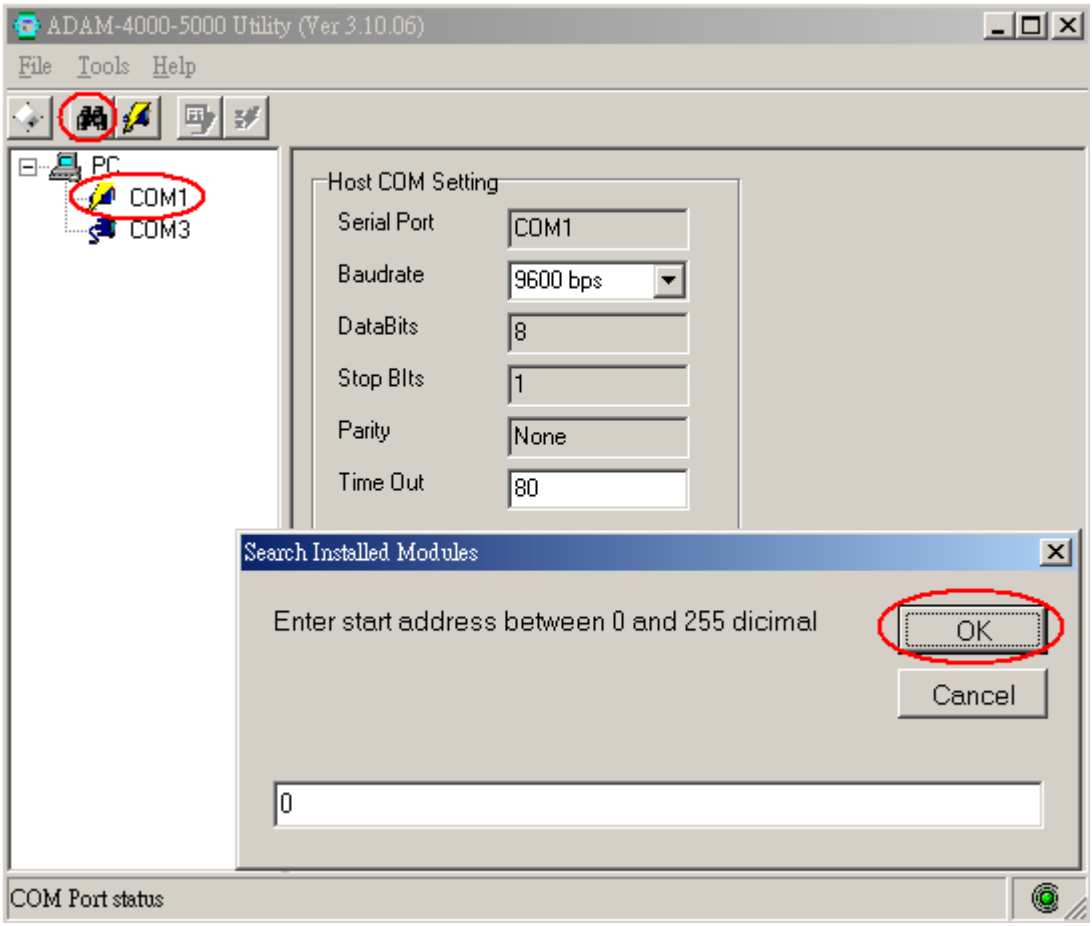

Figure D.1 Search screen

Caution! *When changing configuration, calibration or alarm parameters, you should always make sure that a window appears notifying you that the target module has confirmed the changes.*

An asterix sign "" before the modules address indicates that the module is in the INIT* state.*

Configuration

Click the searched module, which you would like to configure. You will find Setup page and related settings. An example is shown in Figure D.2 for an ADAM-4011 module.

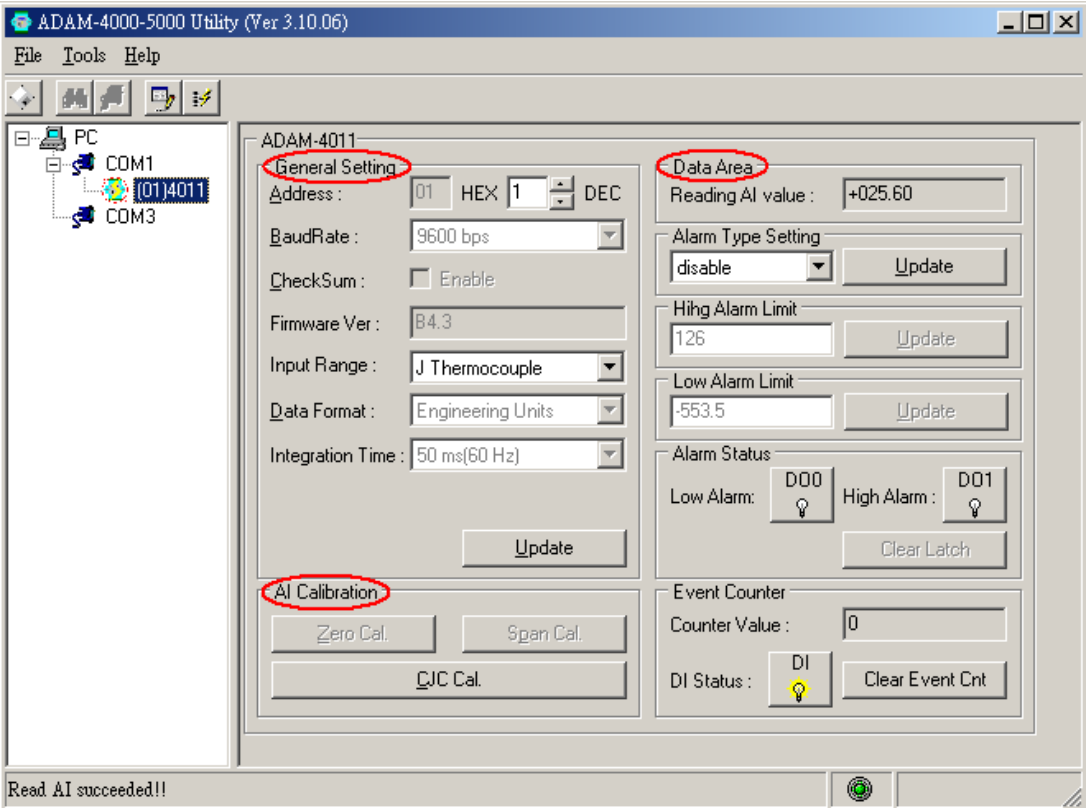

Figure D.2 Configuration Screen

Here there are three major areas, General Setting, Data Area and AI Calibration. You may change the settings by selecting the preferred items and then clicking Update button.

The Checksum and Baud rate options need special attention since they can only be changed when an ADAM module is in the INIT* state. To place a module in INIT state, its INIT terminal should be connected to its GND terminal (see Baud rate and Checksum in Chapter 2). When the ADAM module is not in INIT mode, an error message will appear.

After you have made all necessary changes to the module configuration, the utility will display the process data automatically.

Calibration

Please note only analog input and output modules can be calibrated. For example, ADAM-4011 module has Zero, Span and CJC Calibration items. To learn what steps should be taken to calibrate both input and output modules, please refer to Chapter 8 Calibration.

Terminal Function

When you would like to send and receive commands on the RS-485 line directly, you can use this Terminal function in this utility.

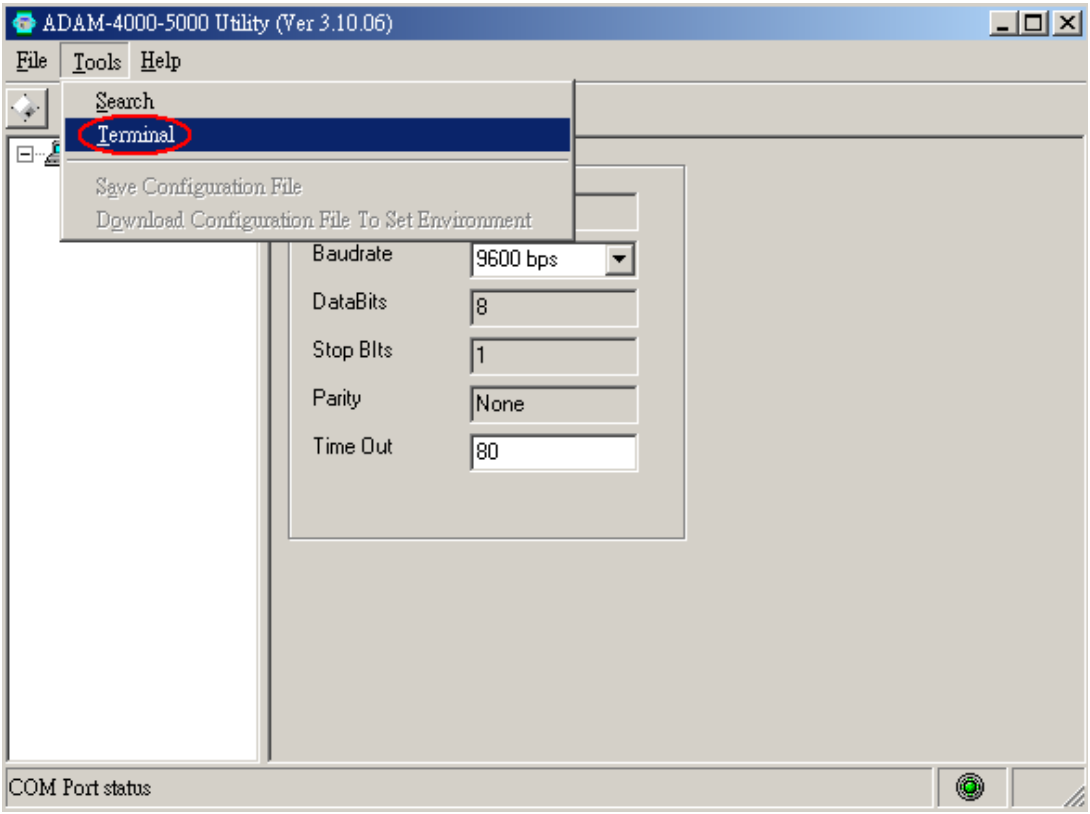

Figure D.3 Terminal Function

You can type the ADAM ASCII command in the text box and click Send button for testing the commands which are listed in Chapter 4 Command Set.

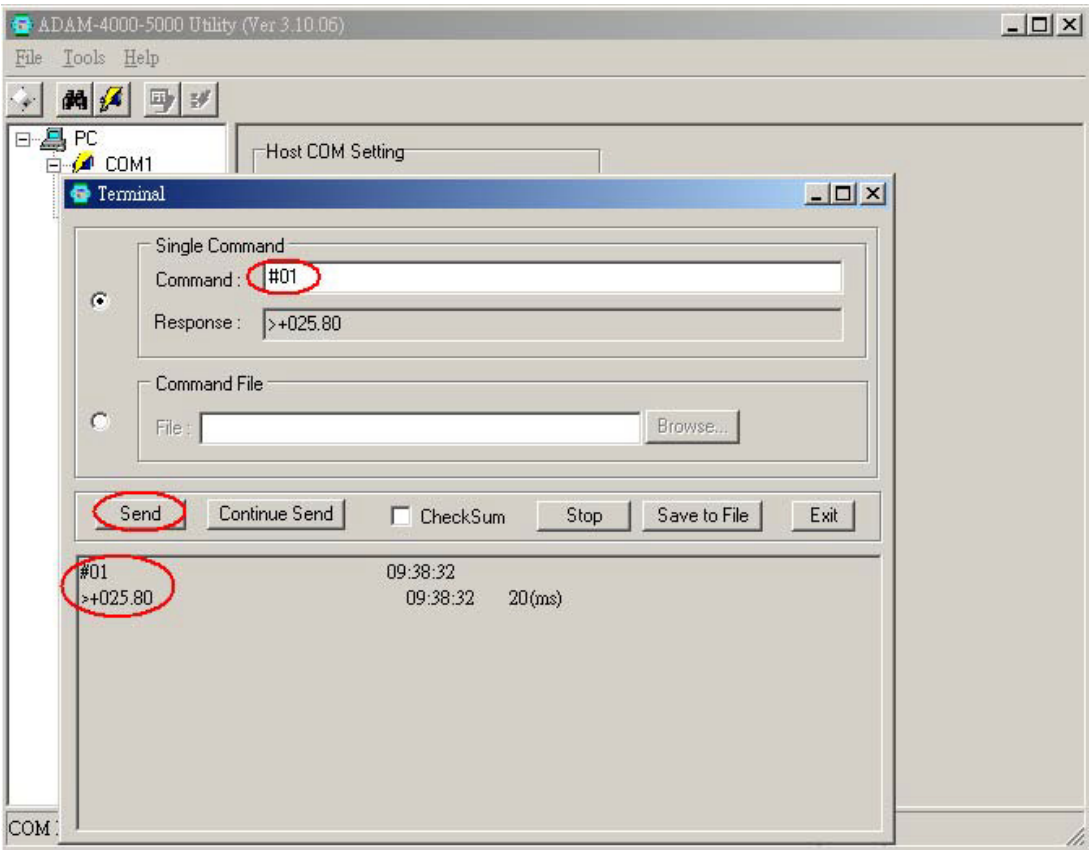

Figure D.4 Terminal Function

Caution! *User can refer our help file to see more details for explanation of Utility operation.*

D.2 The Procedure for ADAM-4000 Series Installation Guide

When user first time gets ADAM-4000 modules, he can refer following procedure to configure and operate. Especially note that new ADAM-4000 modules will have default factory settings with Address setting 1, and data format 9600, N, 8, 1. Redefine the address to avoid ID conflict if two or more new modules are used in the same network.

Standard Installation Procedures

1. Prepare the install environment

- Host computer
- Isolated RS-232/RS-485 Converter
- ADAM module

2. Install ADAM-4000-5000 utility in host computer

3.Wiring for ADAM-4000 module

Power supply & Communication Wiring

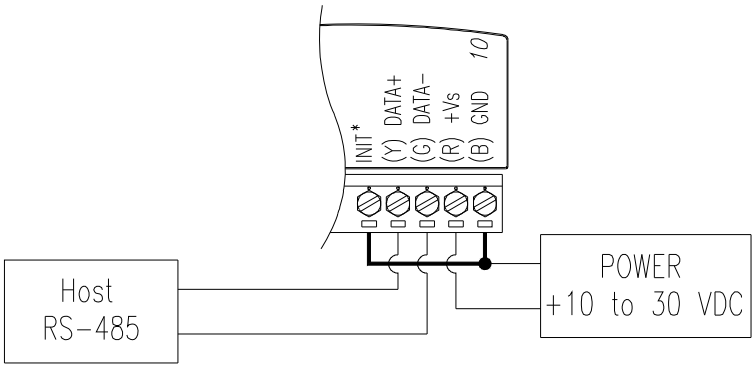

Move hardware switch to Initial mode (For some older Adam models, **use an external wire to connect the INIT* terminal to the GND terminal.** Booting the module while connecting the INIT* terminal with the module's GND terminal forces the configuration into a known state called the INIT* state.)

INIT* state defaults:

Baud rate: 9600

Address: 00h

Checksum: disabled

Forcing the module in INIT* state does not change any parameters in the module's EEPROM. When the module is in the INIT* state with its INIT* and GND terminals shorted, all configuration settings can be changed, and the module will respond to all other commands normally.

Caution! *Init Mode*

When the switch is set to the initial mode, the module will operate with its factory settings. (Address 0 with data format 9600, N, 8, 1).

Normal Mode

When the switch is set to the normal mode, the module will operate with user-defined settings. A power reset will not alter these settings.

5. Connect computer to the ADAM I/O module using a RS-232 to RS-485, or USB to RS-485 converter.

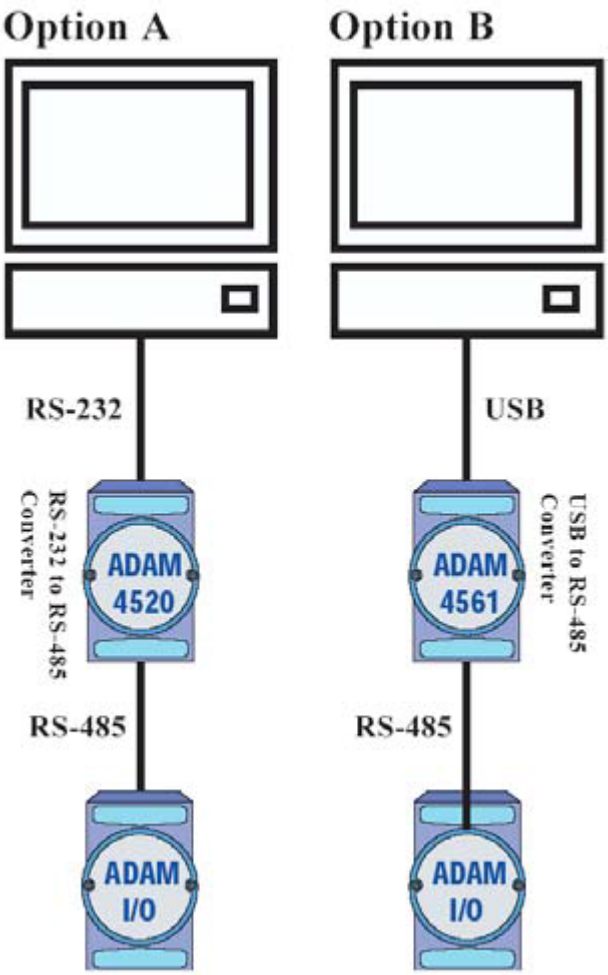

6. Use software to configure settings

According to user's application to set parameter like as address, baudrate, data format, checksum, protocol…and so on.

Changing Baud rate and Checksum

Refer to Chapter 2 section 2.3.

Changing the protocol from ADAM ASCII to Modbus

Some ADAM-4000 modules support both ADAM ASCII and Modbus protocols, and the factory default setting of these modules is ADAM ASCII protocol. If you would like to configure the modules to Modbus protocol, please refer to Appendix H which describes how to change the protocol in ADAM utility.

7. Save changes and reset power on ADAM module for settings to take effect.

Appendix E

RS-485 Network

E.1 RS-485 Network

EIA RS-485 is industry's most widely used bidirectional, balanced transmission line standard. It is specifically developed for industrial multi-drop systems that should be able to transmit and receive data at high rates or over long distances.

The specifications of the EIA RS-485 protocol are as follows:

- Max line length per segment: 1200 meters (4000 feet)
- Throughput of 10 Mbaud and beyond
- Differential transmission (balanced lines) with high resistance against noise
- Maximum 32 nodes per segment
- Bi-directional master-slave communication over a single set of twisted pair cables
- Parallel connected nodes, true multi-drop

ADAM modules are fully isolated and use just a single set of twisted pair wires to send and receive! Since the nodes are connected in parallel they can be freely disconnected from the host without affecting the functioning of the remaining nodes. In industry shielded twisted pair is preferable due to the high noise ratio of the environment.

When nodes communicate through the network, no sending conflicts can occur since a simple command/response sequence is used. There is always one initiator (with no address) and many slaves (with address). In this case the master is a personal computer that is connected with its serial, RS-232, port to an ADAM RS-232/RS-485 converter. The slaves are the ADAM I/O modules. When modules are not transmitting data, they are in listen mode. The host computer initiates a command/response sequence with one of the modules. Commands normally contain the address of the module the host wants to communicate with. The module with the matching address carries out the command and sends its response to the host.

E.2 Basic Network Layout

Multi-drop RS-485 implies that there are two main wires in an segment. The connected modules tap from these two lines with so called drop cables. Thus all connections are parallel and connecting or disconnecting of a node doesn't affect the network as a whole. Since ADAM modules use the RS-485 standard, and use an ASCII-based commands set, they can connect and communicate with all ASCIIbased computers and terminals. The basic layouts that can be used for an RS-485 network are:

Daisychain

The last module of a segment is a repeater. It is directly connected to the main-wires thereby ending the first segment and starting the next segment. Up to 32 addressable modules can be diasychained. This limitation is a physical one. When using more modules per segment the IC driver current rapidly decreases, causing communication errors. Totally the network can hold up to 256 addressable modules. The limitation for this number is the two number hexadecimal address codes that know 256 combinations. The ADAM converter, ADAM repeaters and the host computer are non addressable units and therefore are not included in these numbers.

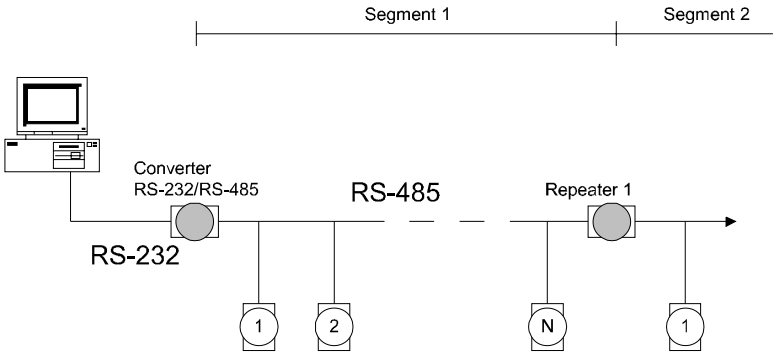

Figure E.1 Daisychaining

Star Layout

In this scheme the repeaters are connected to drop-down cables from the main wires of the first segment. A tree structure is the result. This scheme is not recommended when using long lines since it will cause a serious amount of signal distortion due to a signal reflection in a several line endings.

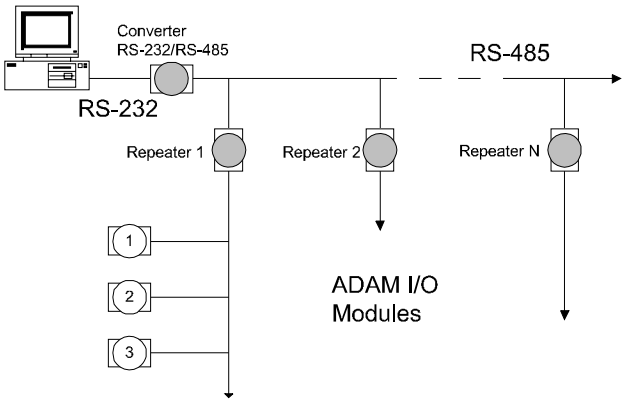

Figure E.2 Star Structure

Random

This is a combination of daisychain and hierarchical structure

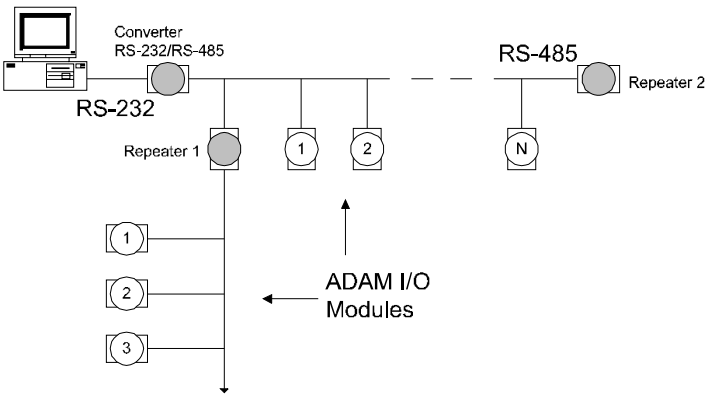

Figure E.3 Random Structure

E.3 Line Termination

Each discontinuity in impedance causes reflections and distortion. When an impedance discontinuity occurs in the transmission line the immediate effect is signal reflection. This will lead to signal distortion. Specially at line ends this mismatch causes problems. To eliminate this discontinuity terminate the line with a resistor.

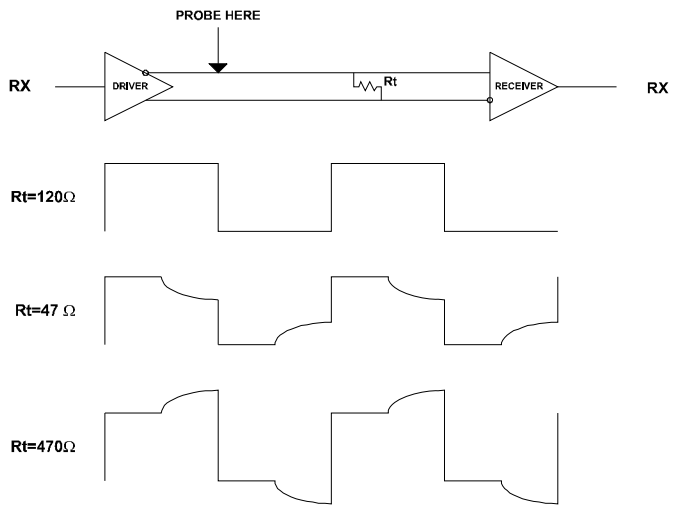

Figure E.4 Signal Distortion

The value of the resistor should be a close as possible to the characteristic impedance of the line. Although receiver devices add some resistance to the whole of the transmission line, normally it is sufficient to the resistor impedance should equal the characteristic impedance of the line.

Example:

Each input of the receivers has a nominal input impedance of 18 kW feeding into a diode transistor- resistor biasing network that is equivalent to an 18 kΩ input resistor tied to a common mode voltage of 2.4 V. It is this configuration which provides the large common range of the receiver required for RS-485 systems! (See Figure E.5 below)

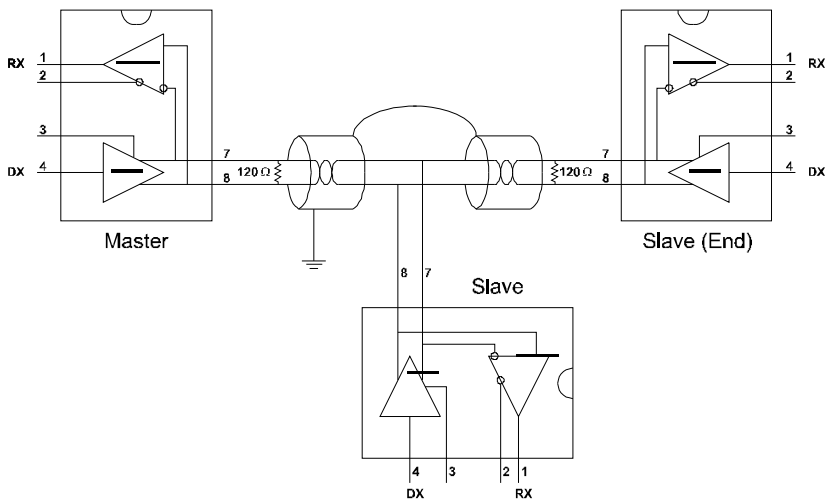

Figure E.5 Termination resistor locations

Because each input is biased to 2.4 V, the nominal common mode voltage of balanced RS-485 systems, the 18 kΩ on the input can be taken as being in series across the input of each individual receiver.

If thirty of these receivers are put closely together at the end of the transmission line, they will tend to react as thirty 36kΩ resistors in parallel with the termination resistor. The overall effective resistance will need to be close to the characteristics of the line.

The effective parallel receiver resistance RP will therefore be equal to:

R_P = 36 x 103/30 = 1200 W

While the termination receptor RT will equal:

$R_T = R_O / [1 - R_O/R_P]$

Thus for a line with a characteristic impedance of 100 Ω resistor, the termination resistor RT should be:

R_T = 100/[1 - 100/1200] = 110 Ω

Since this value lies within 10% of the line characteristic impedance.

Thus as already stated above the line termination resistor RT will normally equal the characteristic impedance Z_O.

The star connection causes a multitude of these discontinuities since there are several transmission lines and is therefore not recommend.

Caution! *The recommended wiring method that causes a minimum amount of reflection is daisy chaining where all receivers tap from one transmission line and needs to be terminated only twice.*

E.4 RS-485 Data Flow Control

The RS-485 standard uses a single pair of wires to send and receive data. This line sharing requires some method to control the direction of the data flow. RTS (Request To Sent) and CTS (Clear To Sent) are the most commonly used method.

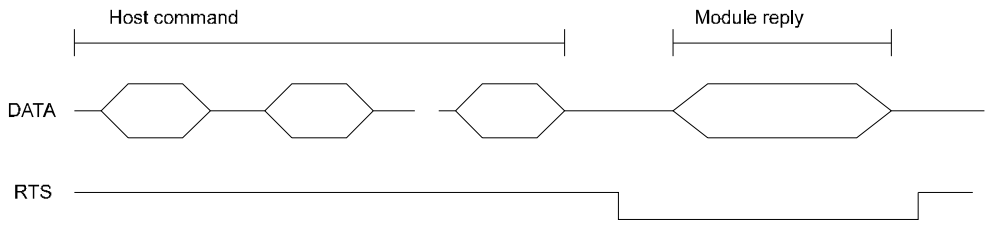

Figure E.6 RS-485 data flow control with RTS

Intelligent RS-485 Control

ADAM-4510 and ADAM-4520 are both equipped with an I/O circuit which can automatically sense the direction of the data flow. No handshaking with the host (like RTS, Request to Send) is necessary to receive data and forward it in the correct direction. You can use any software written for half-duplex RS-232 with an ADAM network without modification. The RS-485 control is completely transparent to the user.

Appendix F

How to Use the Checksum Feature

A checksum helps you detect communication errors between the host and module. This feature adds two extra checksum characters to the command or response string; therefore, it reduces the throughput.

F.1 Checksum Enable/Disable

In order to enable configuration of a module's checksum feature, its INIT* terminal should be shorted to its GND terminal. Then, the module should be rebooted. The checksum feature is enabled by setting bit 6 of the data format/checksum parameter to 1. On the other hand, the checksum is disabled by setting the parameter to 0. Whenever the checksum feature is used, all the connected devices including the host computer should be in enable mode.

The checksum is represented by a 2-character ASCII hexadecimal format and is transmitted just prior to the carriage return. The checksum equals to the result after performing modulus-256 (100h) of all the ASCII values' sum preceding the checksum. If the checksum is missing or incorrect, the module will not respond.

Example 1

The following example is an Analog Data In command and response when the checksum is enabled:

Command: #0588(CR)

Response: +3.56719D(CR)

The input value of the module at address 05h is +3.5671 V. (The data format is in engineering units.) The command checksum (88h) is the sum of the ASCII values for the following characters: #, 0, and 5. The response checksum (9Dh) is the sum of the ASCII values for the following characters: “>”, “+”, “3”, “.”, “5”, “6”, “7”, and “1”.

Example 2

This example explains how to calculate the checksum value of a Read High alarm limit command string:

Case 1. (If the Checksum feature is disabled)

Command: $07RH(cr)

Response: !07+2.0500(cr) when the command is valid.

Case 2. (If the Checksum feature is enabled)

Command: $07RH25(cr)

Response: !07+2.0500D8(cr)

where:

25 represents the checksum of this command, and

D8 represents the checksum of the response.

The checksum of the command string is derived as shown below:

25h = (24h+ 30h + 37h + 52h + 48h) MOD 100h

The hexadecimal ASCII codes for $, 0, 7, R, H are 24h, 30h, 37h, 52h and 48h respectively. The sum of these ASCII codes is 125h, and the result equals to 25h after modulus-256(100h) execution.

Table F.1: Printable ASCII Characters							
HEX	**ASCII**	**HEX**	**ASCII**	**HEX**	**ASCII**	**HEX**	**ASCII**
21	!	40	@	5F	_	7E	~
22	""	41	A	60	'		
23	#	42	B	61	a		
24	$	43	C	62	b		
25	%	44	D	63	c		
26	&	45	E	64	d		
27	'	46	F	65	e		
28	(	47	G	66	f		
29	)	48	H	67	g		
2A	*	49	I	68	h		
2B	+	4A	J	69	i		
2C	,	4B	K	6A	j		
2D	-	4C	L	6B	k		
2E	.	4D	M	6C	l		
2F	/	4E	N	6D	m		
30	0	4F	O	6E	n		
31	1	50	P	6F	o		
32	2	51	Q	70	p		
33	3	52	R	71	q		
34	4	53	S	72	r		
35	5	54	T	73	s		
36	6	55	U	74	t		
37	7	56	V	75	u		
38	8	57	W	76	v		
39	9	58	X	77	w		
3A	:	59	Y	78	x		
3B	;	5A	Z	79	y		
3C	<	5B	[	7A	z		
3D	=	5C	\	7B	{		
3E	>	5D	]	7C	|		
3F	?	5E	^	7D	}		

Appendix G

ADAM-4000 I/O Modbus Mapping Table

G.1 ADAM-4000 I/O Modbus Mapping Table

The model list of ADAM-4000 I/O series support Modbus protocol

	Model	Description
1	ADAM-4015	6-channel RTD Input Module
	ADAM-4015T	6-channel Thermistor Input Module
2	ADAM-4017+	8-channel Analog Input Module
3	ADAM-4018+	8-channel Thermocouple Input Module
4	ADAM-4019+	8-Channels Universal Analog Input Module
5	ADAM-4024	4-channel Analog Output Module
6	ADAM-4051	16-channel Isolated Digital Input with LED Module
7	ADAM-4055	16-channel Isolated Digital I/O with LED Module
8	ADAM-4056S	12 channel Sink-type Isolated Digital Output Module
9	ADAM-4056SO	12 channel Source-type Isolated Digital Output Module
10	ADAM-4068	8 Relay Output Module
11	ADAM-4069	8 Power Relay Output Module

1. ADAM-4015 6-channel RTD Input Module and ADAM-4015T 6-channel Thermistor Input Module

ADDR 0X	Channel	Item	Attribute	Memo
00201	0	Burn-out Signal	R	1:Burn-out
00202	1	Burn-out Signal	R	
00203	2	Burn-out Signal	R	
00204	3	Burn-out Signal	R	
00205	4	Burn-out Signal	R	
00206	5	Burn-out Signal	R	
00207	6	Burn-out Signal	R	
00208	7	Burn-out Signal	R	

ADDR 4X	Channel	Item	Attribute	Memo
40001	0	Current Value	R	
40002	1	Current Value	R	
40003	2	Current Value	R	
40004	3	Current Value	R	
40005	4	Current Value	R	
40006	5	Current Value	R	
40007	6	Current Value	R	
40008	7	Current Value	R	
40201	0	Type Code	R/W	0x00 0x0e
40202	1	Type Code	R/W	
40203	2	Type Code	R/W	
40204	3	Type Code	R/W	
40205	4	Type Code	R/W	
40206	5	Type Code	R/W	
40207	6	Type Code	R/W	
40208	7	Type Code	R/W	
40211		Module Name 1	R	0x40 0x18
40212		Module Name 2	R	0x50 0x00
40213		Version 1	R	0xa2 0x00
40214		Version 2	R	0x00 0x00
40221		Channel Enable	R/W	0x00 0xff

2. ADAM-4018+ 8-channel Thermocouple Input Module

ADDR 0X	Channel	Item	Attribute	Memo
00201	0	Burn-out Signal	R	1:Burn-out
00202	1	Burn-out Signal	R	
00203	2	Burn-out Signal	R	
00204	3	Burn-out Signal	R	
00205	4	Burn-out Signal	R	
00206	5	Burn-out Signal	R	
00207	6	Burn-out Signal	R	
00208	7	Burn-out Signal	R	

ADDR 4X	Channel	Item	Attribute	Memo
40001	0	Current Value	R	
40002	1	Current Value	R	
40003	2	Current Value	R	
40004	3	Current Value	R	
40005	4	Current Value	R	
40006	5	Current Value	R	
40007	6	Current Value	R	
40008	7	Current Value	R	
40201	0	Type Code	R/W	0x00 0x0e
40202	1	Type Code	R/W	
40203	2	Type Code	R/W	
40204	3	Type Code	R/W	
40205	4	Type Code	R/W	
40206	5	Type Code	R/W	
40207	6	Type Code	R/W	
40208	7	Type Code	R/W	
40211		Module Name 1	R	0x40 0x18
40212		Module Name 2	R	0x50 0x00
40213		Version 1	R	0xa2 0x00
40214		Version 2	R	0x00 0x00
40221		Channel Enable	R/W	0x00 0xff

3. ADAM-4017+ 8-channel Analog Input Module

ADDR 4X	Channel	Item	Attribute	Memo
40001	0	Current Value	R	
40002	1	Current Value	R	
40003	2	Current Value	R	
40004	3	Current Value	R	
40005	4	Current Value	R	
40006	5	Current Value	R	
40007	6	Current Value	R	
40008	7	Current Value	R	
40201	0	Type Code	R/W	
40202	1	Type Code	R/W	
40203	2	Type Code	R/W	
40204	3	Type Code	R/W	
40205	4	Type Code	R/W	
40206	5	Type Code	R/W	
40207	6	Type Code	R/W	
40208	7	Type Code	R/W	
40211		Module Name 1	R	0x40 0x17
40212		Module Name 2	R	0x50 0x00
40213		Version 1	R	0xa2 0x00
40214		Version 2	R	0x00 0x00
40221		Channel Enable	R/W	0x00 0xff

4. ADAM-4019+ 8-Channels Universal Analog Input Module

ADDR 0X	Channel	Item	Attribute	Memo
00201	0	Burn-out Signal	R	0: Non 1:Burn-out
00202	1	Burn-out Signal	R	
00203	2	Burn-out Signal	R	
00204	3	Burn-out Signal	R	
00205	4	Burn-out Signal	R	
00206	5	Burn-out Signal	R	
00207	6	Burn-out Signal	R	
00208	7	Burn-out Signal	R	

ADDR 4X	Channel	Item	Attribute	Memo
40001	0	Current Value	R	
40002	1	Current Value	R	
40003	2	Current Value	R	
40004	3	Current Value	R	
40005	4	Current Value	R	
40006	5	Current Value	R	
40007	6	Current Value	R	
40008	7	Current Value	R	
40201	0	Type Code	R/W	
40202	1	Type Code	R/W	
40203	2	Type Code	R/W	
40204	3	Type Code	R/W	
40205	4	Type Code	R/W	
40206	5	Type Code	R/W	
40207	6	Type Code	R/W	
40208	7	Type Code	R/W	
40211		Module Name 1	R	0x40 0x19
40212		Module Name 2	R	0x42 0x00
40213		Version 1	R	0xa1 0x00
40214		Version 2	R	0x00 0x00
40221		Channel Enable	R/W	0x00 0xff

5. ADAM-4024 4-channel Analog Output Module

ADDR 0X	Channel	Item	Attribute	Memo
00001	0	Emergency DI Input Flag	R	
00002	1	Burn-out Signal	R	
00003	2	Burn-out Signal	R	
00004	3	Burn-out Signal	R	

ADDR 4X	Channel	Item	Attribute	Memo
40001	0	Current Output Value	R/W	
40002	1	Current Output Value	R/W	
40003	2	Current Output Value	R/W	
40004	3	Current Output Value	R/W	
40201	0	Type Code	R/W	
40202	1	Type Code	R/W	
40203	2	Type Code	R/W	
40204	3	Type Code	R/W	
40211		Module Name 1	R	0x40 0x24
40212		Module Name 2	R	0x00 0x00
40213		Version 1	R	0xa2 0x00
40214		Version 2	R	0x00 0x00
40215		Comm Safety Enable	R	Enable:0x00 0x01
40216		Comm Safety Flag	R	Occur:0x00 0x01
40221		Channel Enable	R/W	0x00 0xff

6. ADAM-4051 16-channel Isolated Digital Input with LED Module

ADDR 0X	Channel	Item	Attribute	Memo
00001	0	DI Input Signal	R	
00002	1	DI Input Signal	R	
00003	2	DI Input Signal	R	
00004	3	DI Input Signal	R	
00005	4	DI Input Signal	R	
00006	5	DI Input Signal	R	
00007	6	DI Input Signal	R	
00008	7	DI Input Signal	R	
00009	8	DI Input Signal	R	
00010	9	DI Input Signal	R	
00011	10	DI Input Signal	R	
00012	11	DI Input Signal	R	
00013	12	DI Input Signal	R	
00014	13	DI Input Signal	R	
00015	14	DI Input Signal	R	
00016	15	DI Input Signal	R	

ADDR 4X	Channel	Item	Attribute	Memo
40211		Module Name 1	R	0x40 0x55
40212		Module Name 2	R	0x00 0x00
40213		Version 1	R	0xa2 0x00
40214		Version 2	R	0x00 0x00

7. ADAM-4055 16-channel Isolated Digital I/O with LED Module

ADDR 0X	Channel	Item	Attribute	Memo
00001	0	DI Input Signal	R	
00002	1	DI Input Signal	R	
00003	2	DI Input Signal	R	
00004	3	DI Input Signal	R	
00005	4	DI Input Signal	R	
00006	5	DI Input Signal	R	
00007	6	DI Input Signal	R	
00008	7	DI Input Signal	R	
00017	0	DO Output Value	R/W	
00018	1	DO Output Value	R/W	
00019	2	DO Output Value	R/W	
00020	3	DO Output Value	R/W	
00021	4	DO Output Value	R/W	
00022	5	DO Output Value	R/W	
00023	6	DO Output Value	R/W	
00024	7	DO Output Value	R/W	

ADDR 4X	Channel	Item	Attribute	Memo
40211		Module Name 1	R	0x40 0x55
40212		Module Name 2	R	0x00 0x00
40213		Version 1	R	0xa2 0x00
40214		Version 2	R	0x00 0x00
40215		Comm Safety Enable	R	Enable:0x00 0x01
40216		Comm Safety Flag	R	Occur:0x00 0x01

8. ADAM-4056S 12 channel Sink-type Isolated Digital Output Module

ADDR 0X	Channel	Item	Attribute	Memo
00017	0	Digital Output Value	R/W	
00018	1	Digital Output Value	R/W	
00019	2	Digital Output Value	R/W	
00020	3	Digital Output Value	R/W	
00021	4	Digital Output Value	R/W	
00022	5	Digital Output Value	R/W	
00023	6	Digital Output Value	R/W	
00024	7	Digital Output Value	R/W	
00025	8	Digital Output Value	R/W	
00026	9	Digital Output Value	R/W	
00027	10	Digital Output Value	R/W	
00028	11	Digital Output Value	R/W	

ADDR 4X	Channel	Item	Attribute	Memo
40211		Module Name 1	R	0x40 0x56
40212		Module Name 2	R	0x53 0x00
40213		Version 1	R	0xA1 0x00
40214		Version 2	R	0x00 0x00
40215		Comm Safety Enable	R	Enable:0x00 0x01
40216		Comm Safety Flag	R	Occur:0x00 0x01

9. ADAM-4056SO 12 channel Source-type Isolated Digital Output Module

ADDR 0X	Channel	Item	Attribute	Memo
00017	0	Digital Output Value	R/W	
00018	1	Digital Output Value	R/W	
00019	2	Digital Output Value	R/W	
00020	3	Digital Output Value	R/W	
00021	4	Digital Output Value	R/W	
00022	5	Digital Output Value	R/W	
00023	6	Digital Output Value	R/W	
00024	7	Digital Output Value	R/W	
00025	8	Digital Output Value	R/W	
00026	9	Digital Output Value	R/W	
00027	10	Digital Output Value	R/W	
00028	11	Digital Output Value	R/W	
00029	Over Current CH0-3	Over Current Flag	R/W	
00030	Over Current CH4-7	Over Current Flag	R/W	
00031	Over Current CH8-11	Over Current Flag	R/W	

ADDR 4X	Channel	Item	Attribute	Memo
40211		Module Name 1	R	0x40 0x56
40212		Module Name 2	R	0x53 0x4F
40213		Version 1	R	0xA1 0x00
40214		Version 2	R	0x00 0x00
40215		Comm Safety Enable	R	Enable:0x00 0x01
40216		Comm Safety Flag	R	Occur:0x00 0x01

10. ADAM-4068 8 Relay Output Module

ADDR 0X	Channel	Item	Attribute	Memo
00017	0	Relay Output Value	R/W	
00018	1	Relay Output Value	R/W	
00019	2	Relay Output Value	R/W	
00020	3	Relay Output Value	R/W	
00021	4	Relay Output Value	R/W	
00022	5	Relay Output Value	R/W	
00023	6	Relay Output Value	R/W	
00024	7	Relay Output Value	R/W	

ADDR 4X	Channel	Item	Attribute	Memo
40211		Module Name 1	R	0x40 0x68
40212		Module Name 2	R	0x00 0x00
40213		Version 1	R	0xa2 0x00
40214		Version 2	R	0x00 0x00
40215		Comm Safety Enable	R	Enable:0x00 0x01
40216		Comm Safety Flag	R	Occur:0x00 0x01

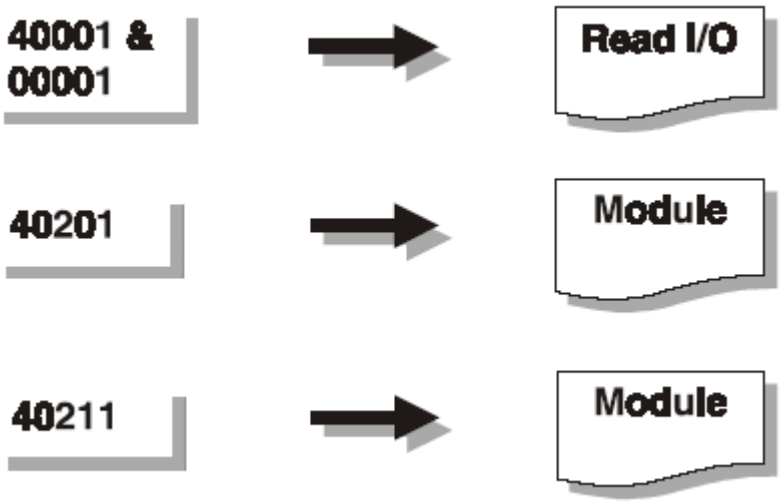

11. ADAM-4069 8 Power Relay Output Module

ADDR 0X	Channel	Item	Attribute	Memo
00017	0	Relay Output Value	R/W	
00018	1	Relay Output Value	R/W	
00019	2	Relay Output Value	R/W	
00020	3	Relay Output Value	R/W	
00021	4	Relay Output Value	R/W	
00022	5	Relay Output Value	R/W	
00023	6	Relay Output Value	R/W	
00024	7	Relay Output Value	R/W	

ADDR 4X	Channel	Item	Attribute	Memo
40211		Module Name 1	R	0x40 0x69
40212		Module Name 2	R	0x00 0x00
40213		Version 1	R	0xa1 0x01
40214		Version 2	R	0x00 0x00
40215		Comm Safety Enable	R	Enable:0x00 0x01
40216		Comm Safety Flag	R	Occur:0x00 0x01

Appendix H

Changing Configuration to Modbus Protocol

H.1 Changing Configuration to Modbus Protocol

The ADAM-4000 Modbus version modules may come from the factory set for which ADAM ASCII protocol are set as the default protocol.

If the module is connected to a Modbus network, the Modbus network may not recognize the module. This may be caused by the incorrect settings. ADAM-4000 module should be set-up for Modbus protocol instead of ADAM ASCII protocol.

Please follow the steps as below for configuring an ADAM-4000 module to Modbus protocol.

1. Configure the ADAM-4000 Module with the ADAM-4000 utility (latest ADAM-4000 utility can be found at www.advantech.com service & support.)
2. Initialize the ADAM-4000 on a RS-485 network (the preferred method is one module at a time on the RS-485 network).
3. With the module powered off, turn the switch in the “Init” position. (For some older Adam models, use an external wire to connect the INIT* terminal to the GND terminal)
4. Power up the module
5. Wait 10 seconds for the module to initialize.
6. Using the ADAM-4000 utility, search (scan) for the module to change the protocol. (Initial COM settings: 9600 baud, N-8-1)
7. The utility will identify the module from the search function.
8. The ADAM-4000 utility will now permit the serial data protocol to be changed to the Modbus protocol.
9. The address and COM port settings can also be changed at this time.
10. To access the module, click on the module icon in the utility.
11. Update the settings by pressing the “Update” button.
12. Power off the module.
13. Turn the switch back to NORMAL* position. (For the older Adam models, remove the wire between the INIT* and GND terminals)
14. The module is now ready to be placed in the Modbus network.

ADVANTECH

Enabling an Intelligent Planet

www.advantech.com

Please verify specifications before quoting. This guide is intended for reference purposes only.
All product specifications are subject to change without notice.
No part of this publication may be reproduced in any form or by any means, electronic, photocopying, recording or otherwise, without prior written permission of the publisher.
All brand and product names are trademarks or registered trademarks of their respective companies.
© Advantech Co., Ltd. 2014