R82 Series, Radial, 5 mm Lead Spacing, 50 – 400 VDC (Automotive Grade)

Electronic Components KEMET CHARGED.

Overview

The R82 Series is constructed of metallized polyester film (wound or stacked technology) with radial leads of tinned wire. Radial leads are electrically welded to the contact metal layer on the ends of the capacitor winding. The capacitor is encapsulated with thermosetting resin in a box of material meeting the UL 94V–0 requirements.

Automotive grade devices are available and meet the demanding Automotive Electronics Council's AEC–Q200 qualification requirements.

Applications

Typical applications include blocking, coupling, decoupling, timing and oscillator circuits. Not suitable for across-the-line application (see Suppressor Capacitors).

Benefits

- Voltage range: 50 – 400 VDC
- Capacitance range: 0.001 µF – 4.7 µF
- Lead Spacing: 5 mm
- Capacitance tolerance: ±5%, ±10%, ±20%
- Climatic category: 55/105/56
- Operating temperature range of -55˚C to +105˚C
- RoHS compliance and lead-free terminations
- Tape and reel packaging in accordance with IEC 60286–2
- Self-healing
- Automotive (AEC–Q200) grades available

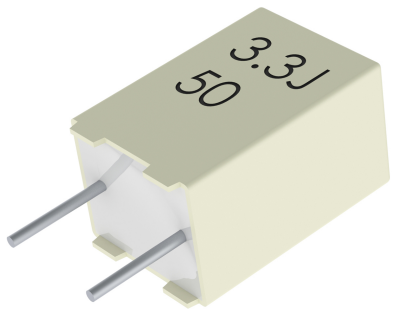

Click image above for interactive 3D content

Open PDF in Adobe Reader for full functionality

Part Number System

R82	D	C	3470	AA	60	J
Series	Rated Voltage (VDC)	Length (mm)	Capacitance Code (pF)	Packaging	Internal Use	Capacitance Tolerance
Metallized Polyester	C = 50 D = 63 E = 100 I = 250 M = 400	C = 5.0	The last three digits represent significant figures. First digit specifies the number of zeros to be added.	See Ordering Options Table	30 50 60 70	J = ±5% K = ±10% M = ±20%

© KEMET Electronics Corporation • P.O. Box 5928 • Greenville, SC 29606 (864) 963-6300 • www.kemet.com

sales@prom-elec.com / ООО ПРОМЭЛЕКТРОНИКА

Ordering Options Table

Lead Spacing Nominal (mm)	Type of Leads and Packaging	LL Lead Length (mm)	Lead and Packaging Code
5	**Standard Lead and Packaging Options**		
	Bulk (Bag)–Short Leads	4 +1.5/-0	AA
	Ammo Pack	H_0=18.5 +/- 0.5	DQ
	Other Lead and Packaging Options		
	Tape & Reel (Standard Reel)	H_0 = 18.5 +/- 0.5	CK
	Bulk (Bag)–Short Leads	2.7 +0.5/-0	JA
	Bulk (Bag)–Short Leads	3.5 +0.5/-0	JB
	Bulk (Bag)–Short Leads	10 +/- 1	JC
	Bulk (Bag)–Short Leads	4.0 +0.5/-0	JE
	Bulk (Bag)–Short Leads	3.2 +0.3/-0.2	JH
	Bulk (Bag)–Long Leads	17 +1/-2	Z3

Dimensions – Millimeters

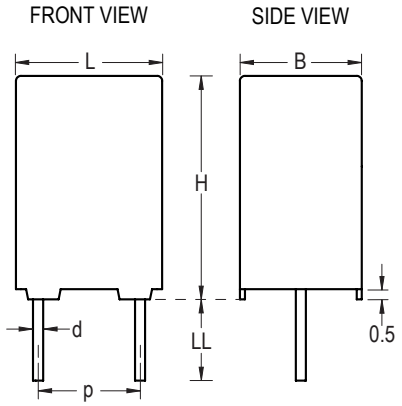

p		B		H		L		d	
Nominal	Tolerance	Nominal	Tolerance	Nominal	Tolerance	Nominal	Tolerance	Nominal	Tolerance
5.0	+/-0.4	2.5	+0.1	6.5	+0.1	7.2	+0.2	0.5	+/-0.05
5.0	+/-0.4	3.5	+0.1	7.5	+0.1	7.2	+0.2	0.5	+/-0.05
5.0	+/-0.4	4.5	+0.1	9.5	+0.1	7.2	+0.3	0.5	+/-0.05
5.0	+/-0.4	5.0	+0.1	10.0	+0.1	7.2	+0.3	0.5	+/-0.05
5.0	+/-0.4	6.0	+0.1	11.0	+0.1	7.2	+0.3	0.5	+/-0.05
5.0	+/-0.4	7.2	+0.1	13.0	+0.1	7.2	+0.3	0.6	+/-0.05
Note: See Ordering Options Table for lead length (LL/H_0) options.									

Performance Characteristics

Dielectric	Polyester film (polyethylene terephthalate).						
Plates	Metal layer deposited by evaporation under vacum.						
Winding	Non-inductive type.						
Leads	Tinned wire.						
Protection	Plastic case, thermosetting resin filled. Box material is solvent resistant and flame retardant according to UL94.						
Related Documents	IEC 60384-2						
Rated Voltage V_R (VDC)	50	63	100	250	250	400	400
Rated Voltage V_R (VAC)	30	40	63	140	160	160	200
Capacitance Range (µF)	2.2 – 4.7	0.1 – 1.5	0.001 – 1	0.022 – 0.22	0.0068 – 0.15	0.0068 – 0.068	0.001 – 0.047
Capacitance Values	E6 series (IEC 60063) measured @ 1 kHz and +20 ±1°C						
Capacitance Tolerance	±5%, ±10%, ±20%						
Operating Temperature Range	-55°C to 105°C						
Rated Temperature T_R	+85°C						
Voltage Derating	Above +85°C DC and AC voltage derating is 1.25%/°C						
Climatic Category	55/105/56 IEC 60068-1						
Storage Conditions	Storage time: ≤ 24 months from the date marked on the label package						
	Average relative humidity per year ≤ 70%						
	RH ≤ 85% for 30 days randomly distributed throughout the year						
	Dew is absent						
	Temperature: -40 to 80°C (see "Maximum Humidity in Storage Conditions" graph below)						
Test Voltage	1.4 x V_R VDC for 2 seconds (between terminations) @ +25°C ±5°C						
Capacitance Drift	Maximum 3% after a 2 year storage period at a temperature of +10°C to +40°C and a relative humidity of 40% to 60%						
Reliability (Reference MIL-HDBK-217)	Operational life >200,000 hours						
	Failure rate ≤ 1 FIT, T = +40°C, V = 0.5 x V_R						
	Failure criteria: open or short circuit, cap. change > 10%, DF 2 times the catalog limits, IR < 0.005 x initial limit						
Maximum Pulse Steepness	dV/dt according to Table 1. For peak to peak voltages lower than rated voltage (Vpp <V_R), the specified dv/dt can be multiplied by the factor V_R/Vpp						
Temperature Coefficient	+400 (±200)ppm/°C at 1 kHz						
Self Inductance (Lead Length ~ 2 mm)	Approximately 7 nH. Maximum 1nH per 1 mm lead and capacitor length.						

Performance Characteristics cont'd

Dissipation Factor tanδ	Maximum Values @ 25°C ±5°C			
	Frequency		C ≤ 0.1 µF	C > 1 µF
	1 kHz		0.80%	0.80%
	10 kHz		1.20%	1.20%
	100 kHz		2.50%	–
Insulation Resistance	Measured @ +25°C ±5°C, according to IEC 60384–2			
	Minimum Values Between Terminals			
	Voltage Charge/Time	C ≤ 0.33 µF	0.33 µF < C ≤ 1.0 µF	C > 1.0 µF
	50 VDC for V_R ≤ 100 VDC 1 minute	≥ 15,000 MΩ	≥ 5,000 MΩ • µF	≥ 1,000 MΩ • µF
	100 VDC for V_R > 100 VDC 1 minute	≥ 30,000 MΩ		

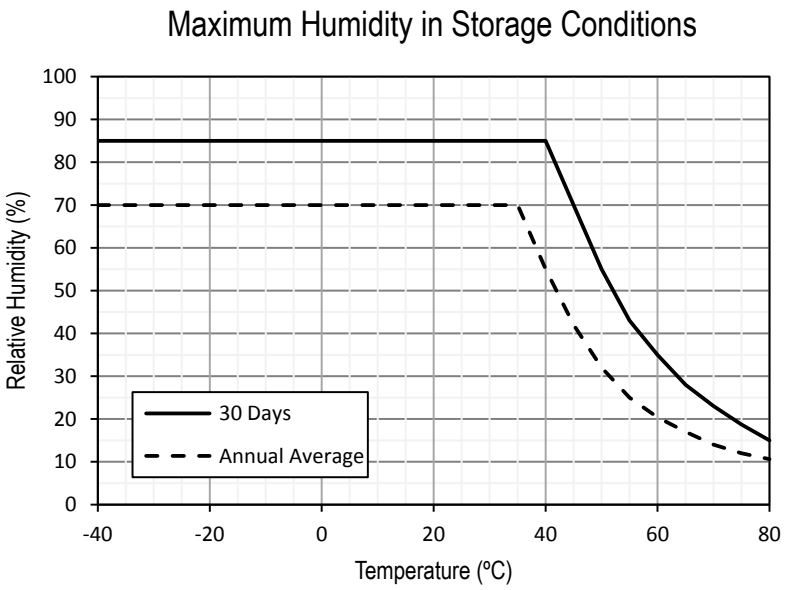

Qualification

Automotive Grade products meet or exceed the requirements outlined by the Automotive Electronics Council. Details regarding test methods and conditions are referenced in document AEC–Q200, Stress Test Qualification for Passive Components. For additional information regarding the Automotive Electronics Council and AEC–Q200, please visit their website at www.aecouncil.com.

Maximum Voltage (V_{rms}) vs. Frequency (Sinusoidal Waveform/Th ≤ 40°C)

Lead Spacing 5 mm

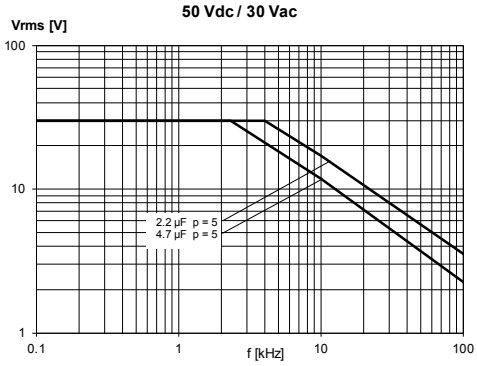

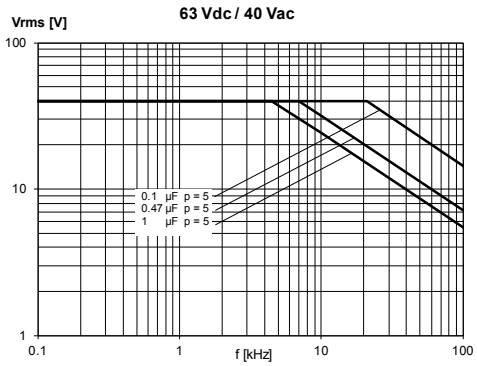

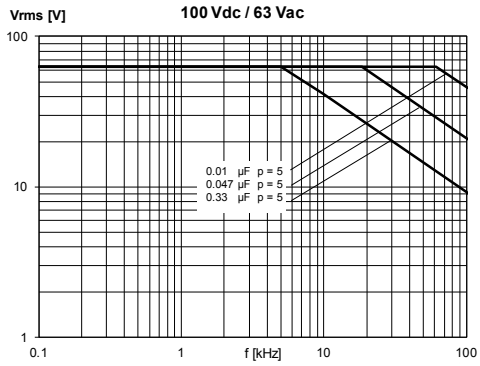

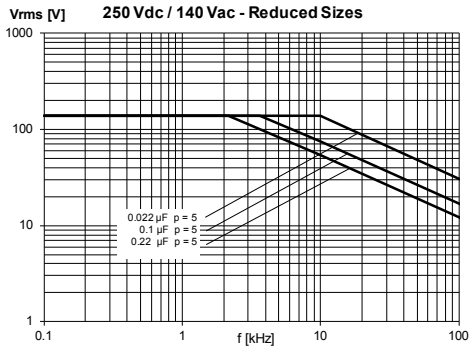

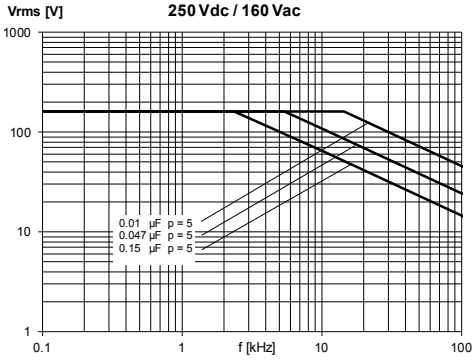

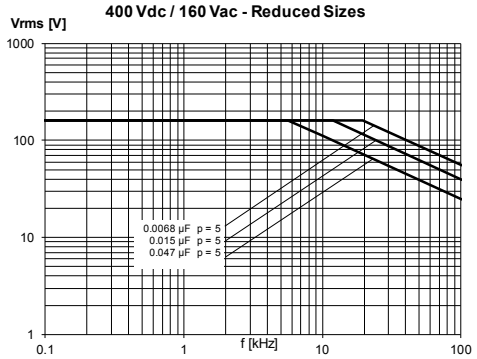

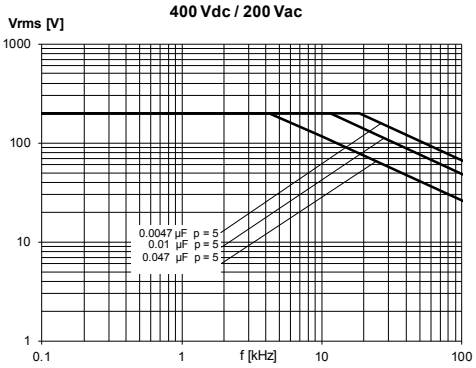

Maximum Current (I_{rms}) vs. Frequency (Sinusoidal Waveform/Th ≤ 40°C)

Lead Spacing 5 mm

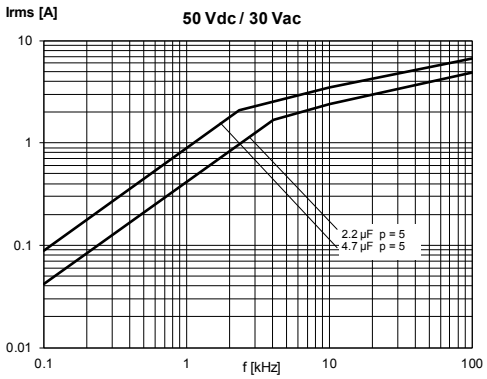

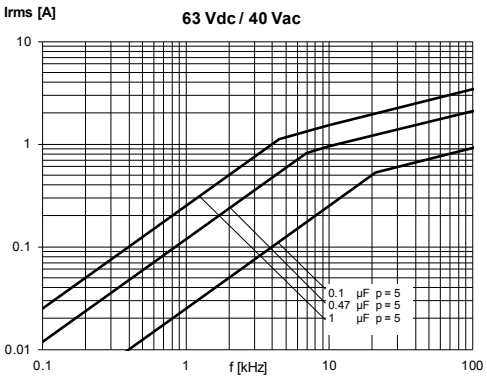

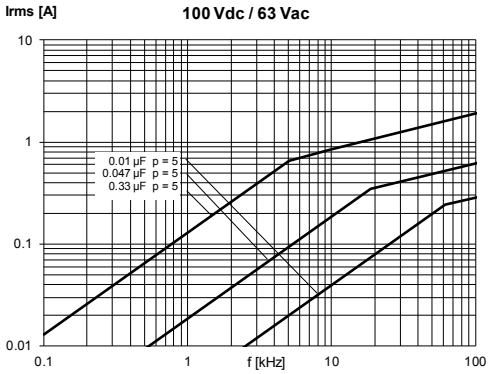

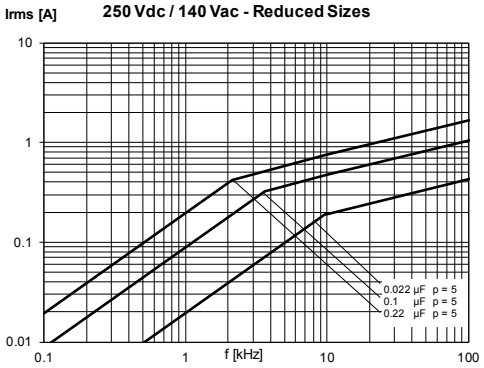

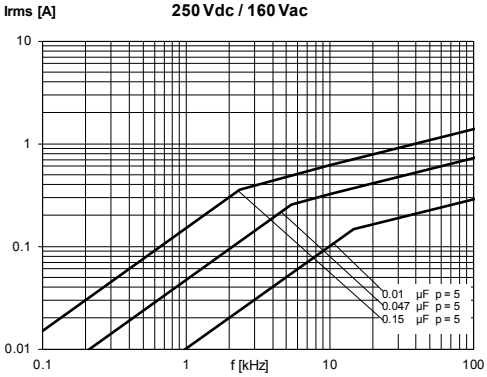

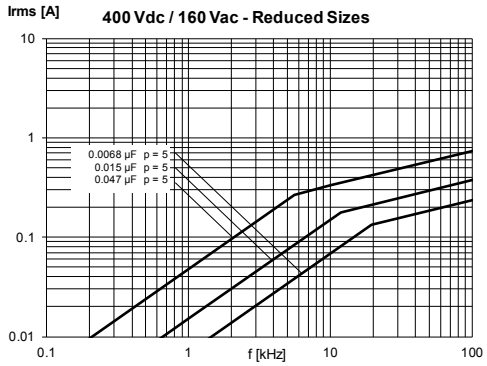

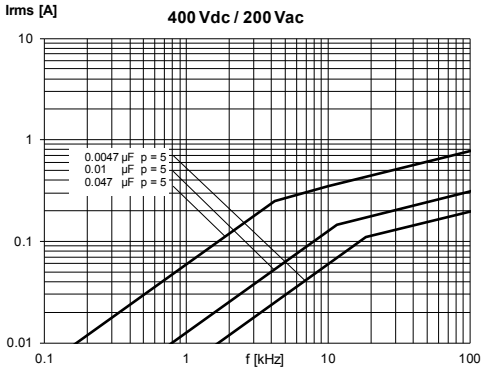

Environmental Test Data

Damp Heat, Steady State Test	Test Conditions:		Performances
	Temperature: Relative humidity (RH): Test duration:	+40°C ±2°C 93% ±2% 56 days	|Δ C/C| ≤ 5%, Δ tanδ ≤ 0.005 @ 1 kHz IR after test ≥ 50% of initial limit
Endurance Test	**Test Conditions**		**Performances**
	Temperature: Voltage applied: Test duration:	+105°C ±2°C 1.25 x V_C 2,000 hours	|Δ C/C| ≤ 5%, Δ tanδ ≤ 0.003 @10 kHz for C ≤ 1μF Δ tanδ ≤ 0.002 @ 1 kHz for C > 1μF IR after test ≥ 50% of initial limit
Resistance to Soldering Heat Test	**Test Conditions**		**Performances**
	Solder bath temperature: Dipping time (with heat screen):	260°C ±5°C 10 seconds ±1 second	|Δ C/C| ≤ 2%, Δ tanδ ≤ 0.003 @10 kHz for C ≤ 1μF Δ tanδ ≤ 0.002 @ 1 kHz for C > 1μF IR after test ≥ initial limit

Environmental Compliance

All KEMET MKT capacitors are RoHS Compliant.

Table 1 – Ratings & Part Number Reference

VDC	VAC	Capacitance Value (μF)	Dimensions in mm			Lead Spacing	dV/dt (V/μs)	Maximum K_0 (V^2/μs)	New KEMET Part Number	Legacy Part Number
			B	H	L					
50	30	2.2	6.0	11.0	7.2	5.0	100	10000	82CC4220(1)70(2)	R82CC4220(1)70(2)
50	**30**	**3.3**	**7.2**	**13.0**	**7.2**	**5.0**	**25**	**2500**	**82CC4330(1)30(2)**	**R82CC4330(1)30(2)**
50	**30**	**4.7**	**7.2**	**13.0**	**7.2**	**5.0**	**25**	**2500**	**82CC4470(1)30(2)**	**R82CC4470(1)30(2)**
63	40	0.10	2.5	6.5	7.2	5.0	160	20160	82DC3100(1)50(2)	R82DC3100(1)50(2)
63	40	0.15	2.5	6.5	7.2	5.0	160	20160	82DC3150(1)60(2)	R82DC3150(1)60(2)
63	40	0.22	2.5	6.5	7.2	5.0	160	20160	82DC3220(1)60(2)	R82DC3220(1)60(2)
63	40	0.33	3.5	7.5	7.2	5.0	160	20160	82DC3330(1)60(2)	R82DC3330(1)60(2)
63	40	0.47	3.5	7.5	7.2	5.0	160	20160	82DC3470(1)60(2)	R82DC3470(1)60(2)
63	40	0.68	4.5	9.5	7.2	5.0	160	20160	82DC3680(1)60(2)	R82DC3680(1)60(2)
63	40	1.0	5.0	10.0	7.2	5.0	160	20160	82DC4100(1)60(2)	R82DC4100(1)60(2)
63	40	1.5	6.0	11.0	7.2	5.0	160	20160	82DC4150(1)60(2)	R82DC4150(1)60(2)
100	63	0.0010	2.5	6.5	7.2	5.0	200	40000	82EC1100(1)50(2)	R82EC1100(1)50(2)
100	63	0.0015	2.5	6.5	7.2	5.0	200	40000	82EC1150(1)50(2)	R82EC1150(1)50(2)
100	63	0.0022	2.5	6.5	7.2	5.0	200	40000	82EC1220(1)50(2)	R82EC1220(1)50(2)
100	63	0.0033	2.5	6.5	7.2	5.0	200	40000	82EC1330(1)50(2)	R82EC1330(1)50(2)
100	63	0.0047	2.5	6.5	7.2	5.0	200	40000	82EC1470(1)50(2)	R82EC1470(1)50(2)
100	63	0.0068	2.5	6.5	7.2	5.0	200	40000	82EC1680(1)50(2)	R82EC1680(1)50(2)
100	63	0.010	2.5	6.5	7.2	5.0	200	40000	82EC2100(1)50(2)	R82EC2100(1)50(2)
100	63	0.015	2.5	6.5	7.2	5.0	200	40000	82EC2150(1)50(2)	R82EC2150(1)50(2)
100	63	0.022	2.5	6.5	7.2	5.0	200	40000	82EC2220(1)50(2)	R82EC2220(1)50(2)
100	63	0.033	2.5	6.5	7.2	5.0	200	40000	82EC2330(1)50(2)	R82EC2330(1)50(2)
VDC	**VAC**	**Capacitance Value (μF)**	**B (mm)**	**H (mm)**	**L (mm)**	**Lead Spacing**	**dV/dt (V/μs)**	**Max K_0 (V^2/μs)**	**New KEMET Part Number**	**Legacy Part Number**

(1) Insert lead and packaging code. See Ordering Options Table for available options.
(2) J = 5%, K = 10%, M = 20%
Bold denotes wound capacitor technology

Table 1 – Ratings & Part Number Reference cont'd

VDC	VAC	Capacitance Value (µF)	Dimensions in mm			Lead Spacing	dV/dt (V/µs)	Maximum K_0 (V^2/µs)	New KEMET Part Number	Legacy Part Number
			B	H	L					
100	63	0.047	2.5	6.5	7.2	5.0	200	40000	82EC2470(1)60(2)	R82EC2470(1)60(2)
100	63	0.068	2.5	6.5	7.2	5.0	200	40000	82EC2680(1)60(2)	R82EC2680(1)60(2)
100	63	0.10	2.5	6.5	7.2	5.0	200	40000	82EC3100(1)70(2)	R82EC3100(1)70(2)
100	63	0.15	3.5	7.5	7.2	5.0	200	40000	82EC3150(1)70(2)	R82EC3150(1)70(2)
100	63	0.22	3.5	7.5	7.2	5.0	200	40000	82EC3220(1)70(2)	R82EC3220(1)70(2)
100	63	0.33	4.5	9.5	7.2	5.0	200	40000	82EC3330(1)70(2)	R82EC3330(1)70(2)
100	63	0.47	4.5	9.5	7.2	5.0	200	40000	82EC3470(1)70(2)	R82EC3470(1)70(2)
100	63	0.68	5.0	10.0	7.2	5.0	200	40000	82EC3680(1)70(2)	R82EC3680(1)70(2)
100	63	1.00	6.0	11.0	7.2	5.0	200	40000	82EC4100(1)70(2)	R82EC4100(1)70(2)
250	140	0.022	2.5	6.5	7.2	5.0	130	65000	82IC2220(1)60(2)	R82IC2220(1)60(2)
250	140	0.047	3.5	7.5	7.2	5.0	130	65000	82IC2470(1)60(2)	R82IC2470(1)60(2)
250	140	0.068	3.5	7.5	7.2	5.0	130	65000	82IC2680(1)60(2)	R82IC2680(1)60(2)
250	140	0.10	4.5	9.5	7.2	5.0	130	65000	82IC3100(1)60(2)	R82IC3100(1)60(2)
250	140	0.15	5.0	10.0	7.2	5.0	130	65000	82IC3150(1)60(2)	R82IC3150(1)60(2)
250	140	0.22	6.0	11.0	7.2	5.0	130	65000	82IC3220(1)60(2)	R82IC3220(1)60(2)
250	160	0.0068	2.5	6.5	7.2	5.0	250	125000	82IC1680(1)50(2)	R82IC1680(1)50(2)
250	160	0.010	2.5	6.5	7.2	5.0	250	125000	82IC2100(1)50(2)	R82IC2100(1)50(2)
250	160	0.015	2.5	6.5	7.2	5.0	250	125000	82IC2150(1)50(2)	R82IC2150(1)50(2)
250	160	0.022	3.5	7.5	7.2	5.0	250	125000	82IC2220(1)50(2)	R82IC2220(1)50(2)
250	160	0.033	3.5	7.5	7.2	5.0	250	125000	82IC2330(1)50(2)	R82IC2330(1)50(2)
250	160	0.047	4.5	9.5	7.2	5.0	250	125000	82IC2470(1)50(2)	R82IC2470(1)50(2)
250	160	0.068	4.5	9.5	7.2	5.0	250	125000	82IC2680(1)50(2)	R82IC2680(1)50(2)
250	160	0.10	5.0	10.0	7.2	5.0	250	125000	82IC3100(1)55(2)	R82IC3100(1)55(2)
250	160	0.15	6.0	11.0	7.2	5.0	250	125000	82IC3150(1)50(2)	R82IC3150(1)50(2)
400	160	0.0068	2.5	6.5	7.2	5.0	200	160000	82MC1680(1)60(2)	R82MC1680(1)60(2)
400	160	0.015	3.5	7.5	7.2	5.0	200	160000	82MC2150(1)60(2)	R82MC2150(1)60(2)
400	160	0.033	4.5	9.5	7.2	5.0	200	160000	82MC2330(1)60(2)	R82MC2330(1)60(2)
400	160	0.047	5.0	10.0	7.2	5.0	200	160000	82MC2470(1)60(2)	R82MC2470(1)60(2)
400	160	0.068	6.0	11.0	7.2	5.0	200	160000	82MC2680(1)60(2)	R82MC2680(1)60(2)
400	200	0.0010	2.5	6.5	7.2	5.0	400	320000	82MC1100(1)50(2)	R82MC1100(1)50(2)
400	200	0.0015	2.5	6.5	7.2	5.0	400	320000	82MC1150(1)50(2)	R82MC1150(1)50(2)
400	200	0.0022	2.5	6.5	7.2	5.0	400	320000	82MC1220(1)50(2)	R82MC1220(1)50(2)
400	200	0.0033	2.5	6.5	7.2	5.0	400	320000	82MC1330(1)50(2)	R82MC1330(1)50(2)
400	200	0.0047	2.5	6.5	7.2	5.0	400	320000	82MC1470(1)50(2)	R82MC1470(1)50(2)
400	200	0.0068	3.5	7.5	7.2	5.0	400	320000	82MC1680(1)50(2)	R82MC1680(1)50(2)
400	200	0.010	3.5	7.5	7.2	5.0	400	320000	82MC2100(1)50(2)	R82MC2100(1)50(2)
400	200	0.015	4.5	9.5	7.2	5.0	400	320000	82MC2150(1)50(2)	R82MC2150(1)50(2)
400	200	0.022	4.5	9.5	7.2	5.0	400	320000	82MC2220(1)50(2)	R82MC2220(1)50(2)
400	200	0.033	5.0	10.0	7.2	5.0	400	320000	82MC2330(1)50(2)	R82MC2330(1)50(2)
400	200	0.047	6.0	11.0	7.2	5.0	400	320000	82MC2470(1)50(2)	R82MC2470(1)50(2)
VDC	**VAC**	**Capacitance Value (µF)**	**B (mm)**	**H (mm)**	**L (mm)**	**Lead Spacing**	**dV/dt (V/µs)**	**Max K_0 (V^2/µs)**	**New KEMET Part Number**	**Legacy Part Number**

(1) Insert lead and packaging code. See Ordering Options Table for available options.
(2) J = 5%, K = 10%, M = 20%

Soldering Process

The implementation of the RoHS directive has resulted in the selection of SnAgCu (SAC) alloys or SnCu alloys as primary solder. This has increased the liquidus temperature from that of 183ºC for SnPb eutectic alloy to 217 – 221ºC for the new alloys. As a result, the heat stress to the components, even in wave soldering, has increased considerably due to higher pre-heat and wave temperatures. Polypropylene capacitors are especially sensitive to heat (the melting point of polypropylene is 160 – 170ºC). Wave soldering can be destructive, especially for mechanically small polypropylene capacitors (with lead spacing of 5 mm to 15 mm), and great care has to be taken during soldering. The recommended solder profiles from KEMET should be used. Please consult KEMET with any questions. In general, the wave soldering curve from IEC Publication 61760-1 Edition 2 serves as a solid guideline for successful soldering. Please see Figure 1.

Reflow soldering is not recommended for through-hole film capacitors. Exposing capacitors to a soldering profile in excess of the above the recommended limits may result to degradation or permanent damage to the capacitors.

Do not place the polypropylene capacitor through an adhesive curing oven to cure resin for surface mount components. Insert through-hole parts after the curing of surface mount parts. Consult KEMET to discuss the actual temperature profile in the oven, if through-hole components must pass through the adhesive curing process. A maximum two soldering cycles is recommended. Please allow time for the capacitor surface temperature to return to a normal temperature before the second soldering cycle.

Manual Soldering Recommendations

Following is the recommendation for manual soldering with a soldering iron.

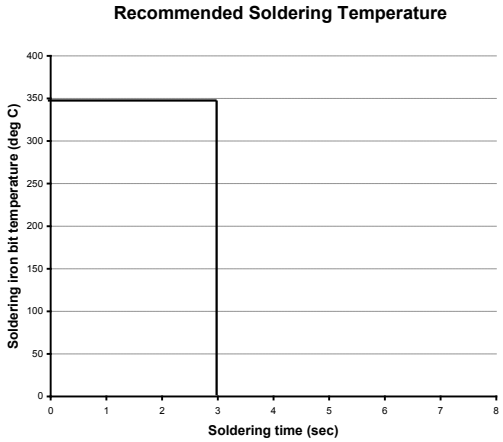

The soldering iron tip temperature should be set at 350°C (+10°C maximum) with the soldering duration not to exceed more than 3 seconds.

Wave Soldering Recommendations

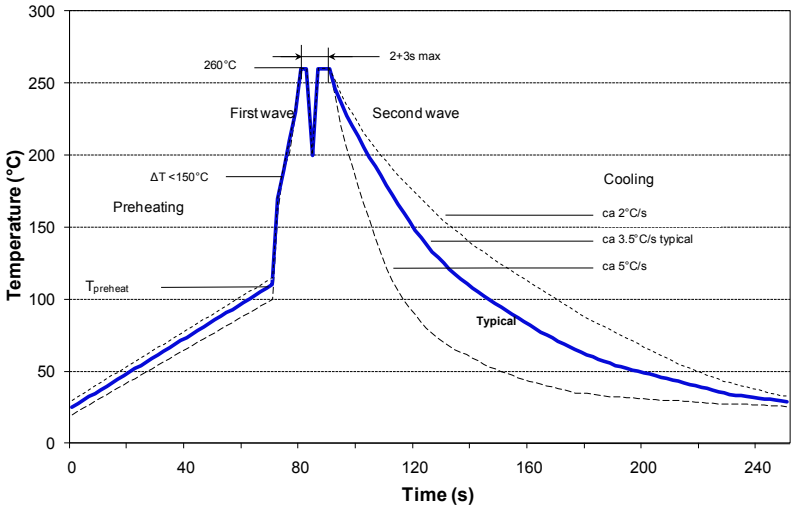

Soldering Process cont'd

Wave Soldering Recommendations cont'd

1. The table indicates the maximum set-up temperature of the soldering process
Figure 1

Dielectric Film Material	Maximum Preheat Temperature			Maximum Peak Soldering Temperature	
	Capacitor Pitch ≤ 10 mm	Capacitor Pitch = 15 mm	Capacitor Pitch > 15 mm	Capacitor Pitch ≤ 15 mm	Capacitor Pitch > 15 mm
Polyester	130°C	130°C	130°C	270°C	270°C
Polypropylene	100°C	110°C	130°C	260°C	270°C
Paper	130°C	130°C	140°C	270°C	270°C
Polyphenylene Sulphide	150°C	150°C	160°C	270°C	270°C

2. The maximum temperature measured inside the capacitor:
Set the temperature so that inside the element the maximum temperature is below the limit:

Dielectric Film Material	Maximum temperature measured inside the element
Polyester	160°C
Polypropylene	110°C
Paper	160°C
Polyphenylene sulphide	160°C

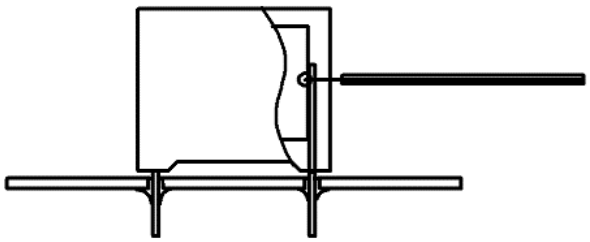

Temperature monitored inside the capacitor.

Selective Soldering Recommendations

Selective dip soldering is a variation of reflow soldering. In this method, the printed circuit board with through-hole components to be soldered is preheated and transported over the solder bath as in normal flow soldering without touching the solder. When the board is over the bath, it is stopped and pre-designed solder pots are lifted from the bath with molten solder only at the places of the selected components, and pressed against the lower surface of the board to solder the components.

The temperature profile for selective soldering is similar to the double wave flow soldering outlined in this document, **however, instead of two baths, there is only one bath with a time from 3 to 10 seconds.** In selective soldering, the risk of overheating is greater than in double wave flow soldering, and great care must be taken so that the parts are not overheated.

Construction

Wound

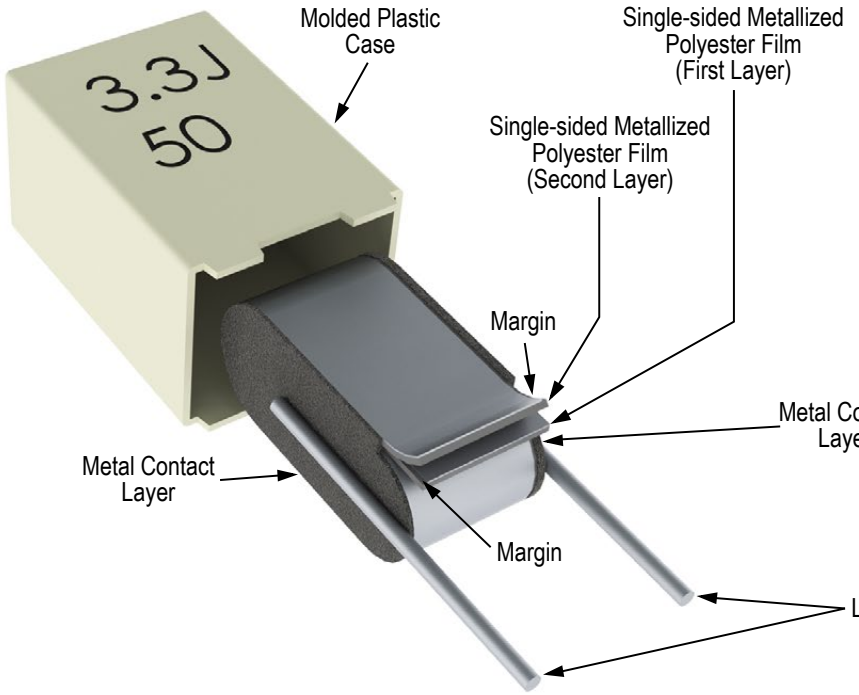

Detailed Cross Section

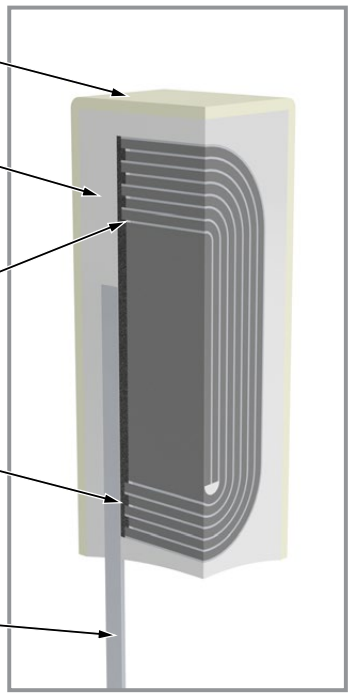

Winding Scheme

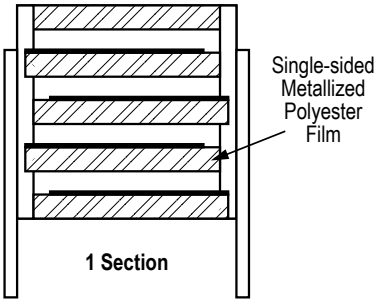

Construction cont'd

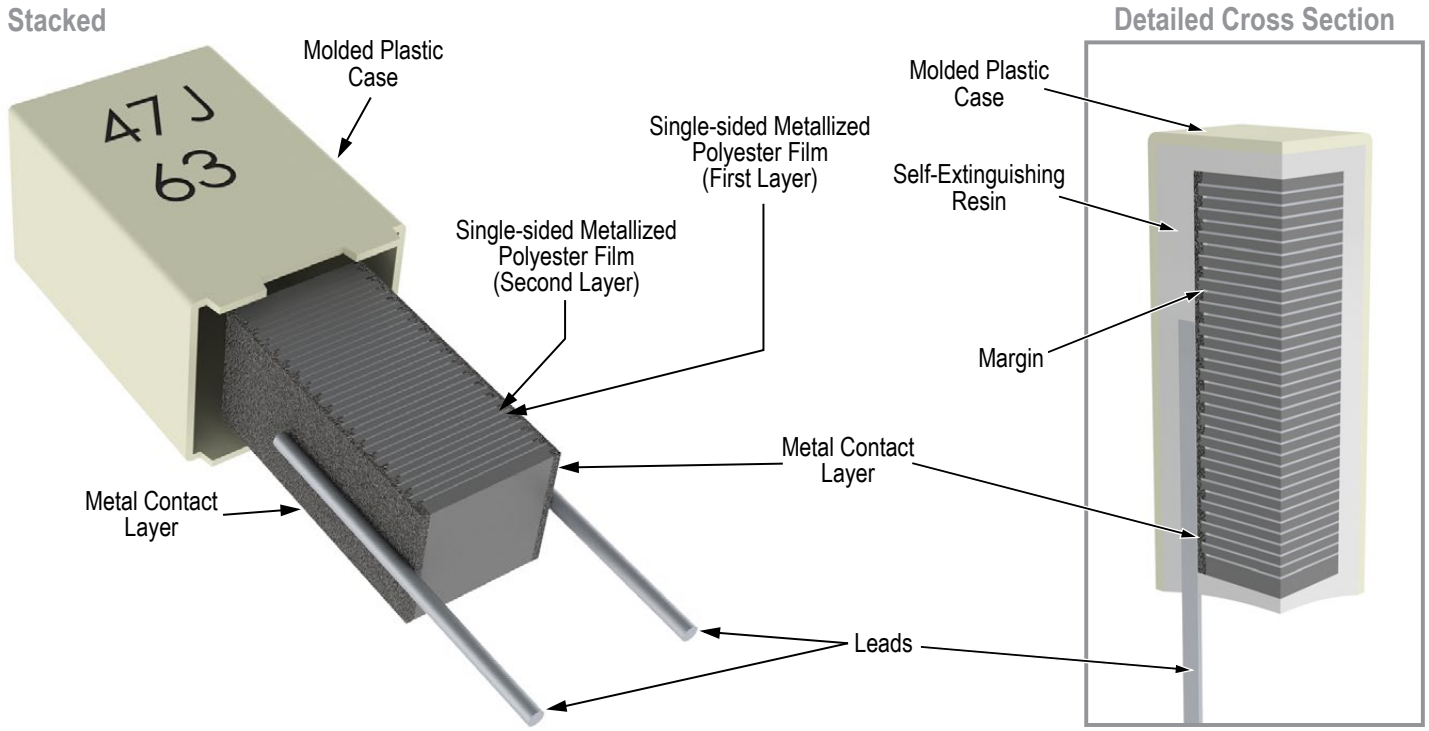

Marking

Wound

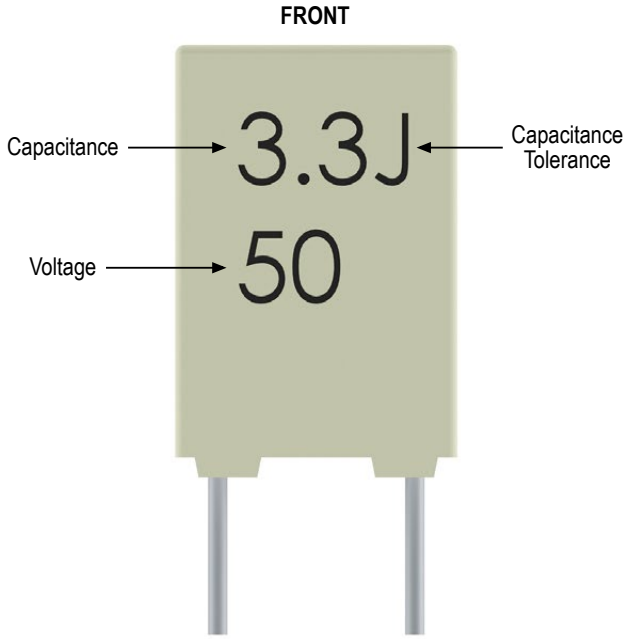

Stacked

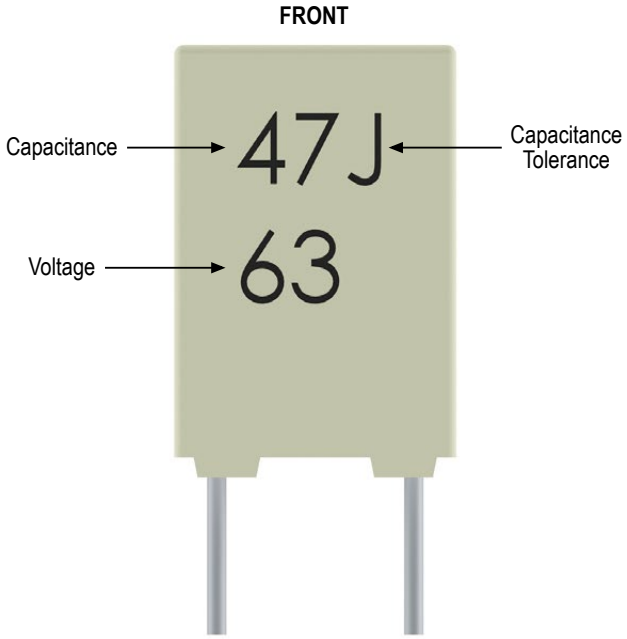

Packaging Quantities

Lead Spacing	Thickness (mm)	Height (mm)	Length (mm)	Bulk Short Leads	Bulk Long Leads	Standard Reel 355 mm	Ammo Taped
5	2.5	6.5	7.2	3,000	4,000	2,500	3,500
	3.5	7.5	7.2	2,000	3,000	1,800	2,500
	4.5	9.5	7.2	1,500	2,000	1,400	1,900
	5.0	10.0	7.2	1,000	1,500	1,200	1,700
	6.0	11.0	7.2	2,000	1,000	1,000	1,400
	7.2	13.0	7.2	1,500	750	800	1,150

Lead Taping & Packaging (IEC 60286–2)

Figure 1 – Lead Space 5 & 7.5 mm

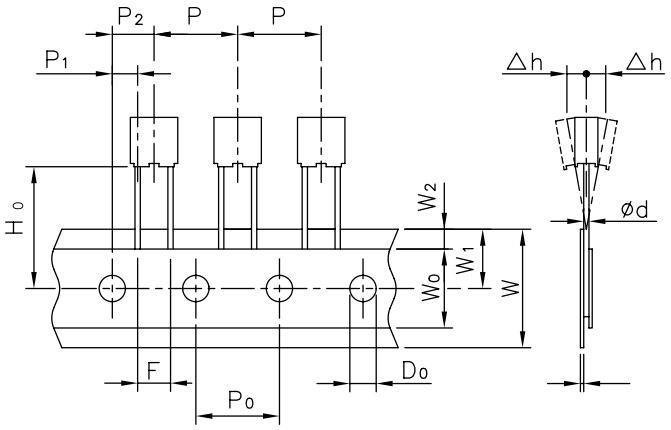

Figure 2 – Lead Space 7.5 mm

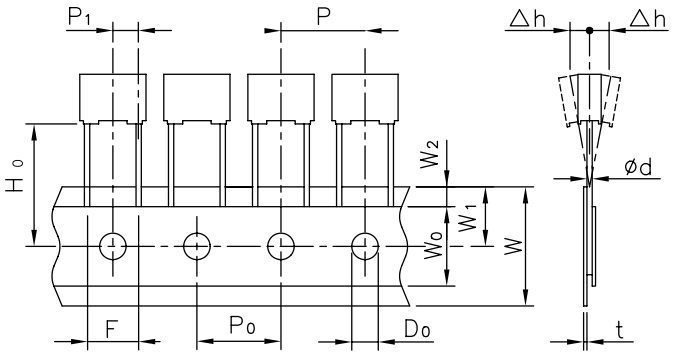

Description	Symbol	Dimensions (mm)			
		Lead Spacing			Tolerance
		5	7.5	7.5	
		Figure 1	Figure 1	Figure 2	
Lead wire diameter	d	0.5–0.6	0.5–0.6	0.5–0.6	±0.05
Taping lead space	P	12.7	12.7	12.7	±1
Feed hole lead space	P_0	12.7	12.7	12.7	±0.2*
Centering of the lead wire	P_1	3.85	2.6	3.75	±0.7
Centering of the body	P_2	6.35	6.35		±1.3
Lead spacing	F	5	7.5	7.5	+0.6 -0.1
Component alignment	Δh	0	0	0	±2
Height of component from tape center	H_0**	18.5	18.5	18.5	±0.5
Carrier tape width	W	18	18	18	+1 -0.5
Hold down tape width	W_0	6	6	6	minimum
Hole position	W_1	9	9	9	±0.5
Hold down tape position	W_2	3	3	3	maximum
Feed hole diameter	D_0	4	4	4	±0.2
Tape thickness	t	0.7	0.7	0.7	±0.2

**Maximum 1 mm on 20 lead spaces.*
***H_0 = 16.5 mm is available upon request.*
For orders of capacitors with lead space = 7.5 mm, please specify the requested version (Figure 1 or Figure 2).

Ammo Specifications

Dimensions in mm		
H	W	T
360 *	340	59

** Lower dimension available upon request (maximum 295 mm)*

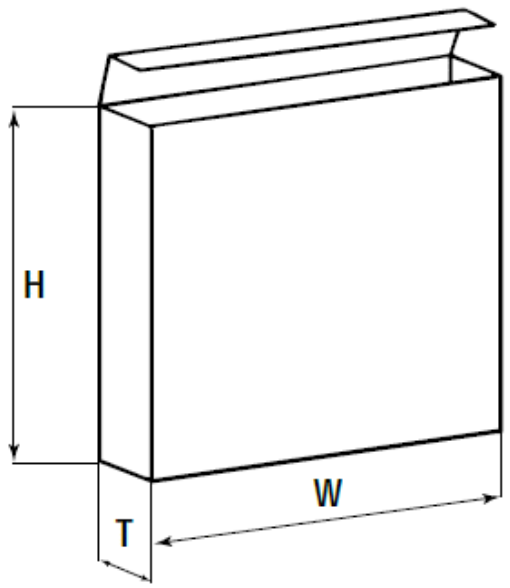

Reel Specifications

Dimensions in mm		
D	H	W
355	30	55 maximum

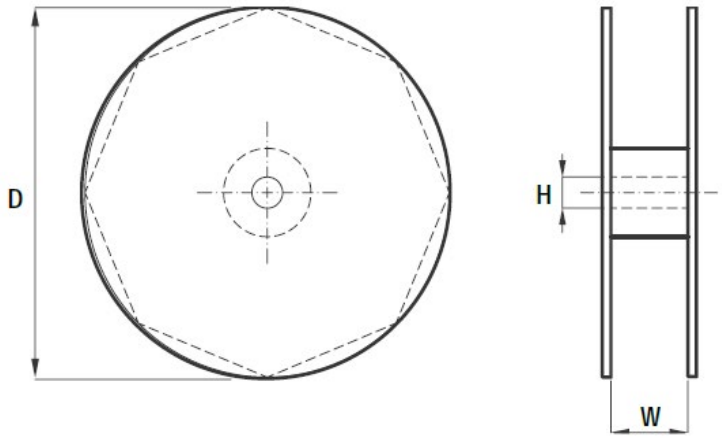

KEMET Corporation World Headquarters

2835 KEMET Way
Simpsonville, SC 29681

Mailing Address:
P.O. Box 5928
Greenville, SC 29606

www.kemet.com
Tel: 864-963-6300
Fax: 864-963-6521

Corporate Offices
Fort Lauderdale, FL
Tel: 954-766-2800

North America

Northeast
Wilmington, MA
Tel: 978-658-1663

Southeast
Lake Mary, FL
Tel: 407-855-8886

Central
Novi, MI
Tel: 248-994-1030

Irving, TX
Tel: 972-915-6041

West
Milpitas, CA
Tel: 408-433-9950

Mexico
Guadalajara, Jalisco
Tel: 52-33-3123-2141

Europe

Southern Europe
Sasso Marconi, Italy
Tel: 39-051-939111

Skopje, Macedonia
Tel: 389-2-55-14-623

Central Europe
Landsberg, Germany
Tel: 49-8191-3350800

Kamen, Germany
Tel: 49-2307-438110

Northern Europe
Wyboston, United Kingdom
Tel: 44-1480-273082

Espoo, Finland
Tel: 358-9-5406-5000

Asia

Northeast Asia
Hong Kong
Tel: 852-2305-1168

Shenzhen, China
Tel: 86-755-2518-1306

Beijing, China
Tel: 86-10-5877-1075

Shanghai, China
Tel: 86-21-6447-0707

Seoul, South Korea
Tel: 82-2-6294-0550

Taipei, Taiwan
Tel: 886-2-27528585

Southeast Asia
Singapore
Tel: 65-6701-8033

Penang, Malaysia
Tel: 60-4-6430200

Bangalore, India
Tel: 91-806-53-76817

Note: KEMET reserves the right to modify minor details of internal and external construction at any time in the interest of product improvement. KEMET does not assume any responsibility for infringement that might result from the use of KEMET Capacitors in potential circuit designs. KEMET is a registered trademark of KEMET Electronics Corporation.

Disclaimer

All product specifications, statements, information and data (collectively, the "Information") in this datasheet are subject to change. The customer is responsible for checking and verifying the extent to which the Information contained in this publication is applicable to an order at the time the order is placed.

All Information given herein is believed to be accurate and reliable, but it is presented without guarantee, warranty, or responsibility of any kind, expressed or implied.

Statements of suitability for certain applications are based on KEMET Electronics Corporation's ("KEMET") knowledge of typical operating conditions for such applications, but are not intended to constitute – and KEMET specifically disclaims – any warranty concerning suitability for a specific customer application or use. The Information is intended for use only by customers who have the requisite experience and capability to determine the correct products for their application. Any technical advice inferred from this Information or otherwise provided by KEMET with reference to the use of KEMET's products is given gratis, and KEMET assumes no obligation or liability for the advice given or results obtained.

Although KEMET designs and manufactures its products to the most stringent quality and safety standards, given the current state of the art, isolated component failures may still occur. Accordingly, customer applications which require a high degree of reliability or safety should employ suitable designs or other safeguards (such as installation of protective circuitry or redundancies) in order to ensure that the failure of an electrical component does not result in a risk of personal injury or property damage.

Although all product–related warnings, cautions and notes must be observed, the customer should not assume that all safety measures are indicted or that other measures may not be required.