Oscillators Quick Start Guide

1. Introduction

Dear Customer! Thank you for your purchase in TME! To protect the environment we have prepared for you this quick start guide. Before operating the unit, please read it carefully. Please visit www.tme.eu Illustrations in this manual are only example images and may differ from the actual item. It does not change their main characteristics.

2. Application

This device is designed to generate waveforms required for testing, analysing electronic circuits, etc.

3. Unit setup and operation

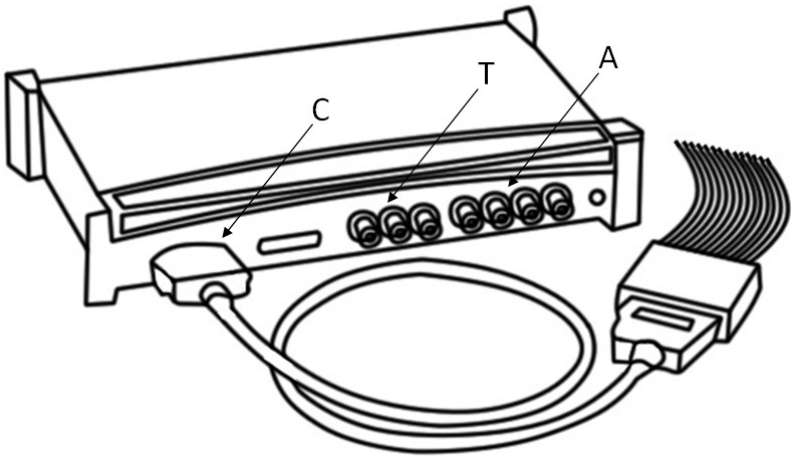

C - Digital outputs
T - Clock output, trigger output/input
A - Analogue outputs

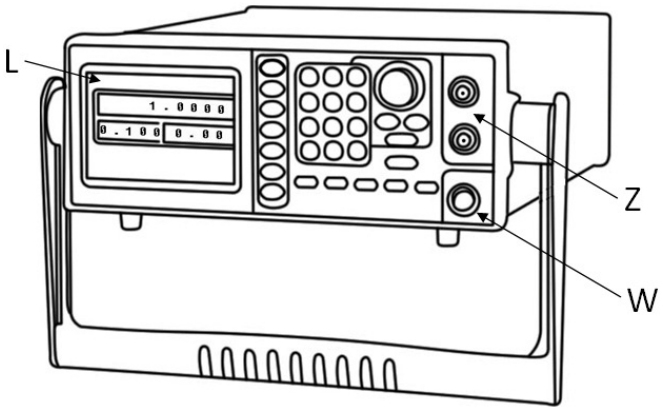

L - LCD display

Transfer Multisort Elektronik Sp. z o.o.
ul. Ustronna 41, 93-350 Łódź, Poland, correspondence address: 90-951 Łódź 40, PO BOX 2071
tel. +48 42 645 54 44, fax +48 42 645 54 70, export@tme.eu, www.tme.eu
VAT ID: PL7290108984, REGON (NACE): 473171710, District Court for Łódź-Śródmieście, NCR: 0000165815, initial capital: 3 300 000 PLN

sales@prom-elec.com / ООО ПРОМЭЛЕКТРОНИКА

Z - BNC output terminals
W - Power on switch

- Plug the power cord into the appropriate slot.
- Turn on the power using the button on the panel.
- Set the function/range selector switch to the desired position. If the value of the measured signal is unknown, select the highest measurement range.
- Connect the BNC cables to the appropriate terminals of the device and system under test.
- Set the desired output function.

4. Precautions

- Observe the rated input values for the devices connected to the generator.
- Use the appropriate terminals, functions, and ranges for the specified device.
- Before changing the function, disconnect the BNC cables.
- Do not use the device if it is damaged. Before you start using it, inspect the cover. Check if it has no cracks or broken off pieces. Carefully check the insulation surrounding the terminals.
- Do not use the device if it works incorrectly. Protection may be impaired. If you are unsure whether the generator is working correctly, have it serviced.
- Use caution when working with voltages above 30 V AC rms, 42 V AC peak and 60 V DC. These voltages can cause electric shock.
- Before starting work, pay attention if the wires and probes have no damaged insulation.
- Damaged test leads have to be replaced with new one.
- Do not touch the wires connected to the device during operation.
- When servicing the device, use only spare parts specified by the manufacturer.
- Do not use the device in explosive environments, if it is not designed to work in such conditions.

Electronic Components

Transfer Multisort Elektronik Sp. z o.o.

ul. Ustronna 41, 93-350 Łódź, Poland, correspondence address: 90-951 Łódź 40, PO BOX 2071
tel. +48 42 645 54 44, fax +48 42 645 54 70, export@tme.eu, www.tme.eu

VAT ID: PL7290108984, REGON (NACE): 473171710, District Court for Łódź-Śródmieście, NCR: 0000165815, initial capital: 3 300 000 PLN