LF-FSD060YB-E

Non-isolated DIP Switch DALI Dimmable Constant Current LED Driver

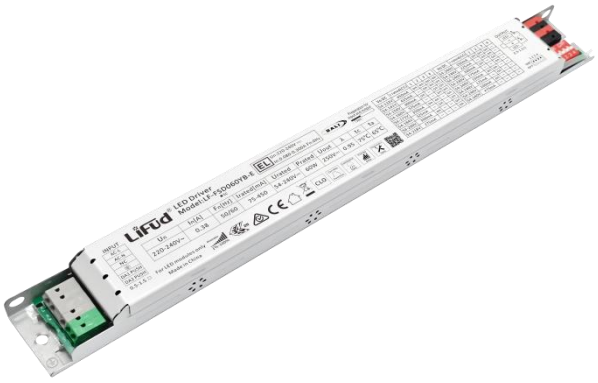

Product family features

— DALI&PUSH dimmable

— Dims to off without afterglow

— Supports 2 sets of light fixtures connected in series

— Standby power consumption≤0.5W

— Suitable for Class I light fixtures

— 5 years guarantee

— Lifetime up to 100,000h

Product family benefits

— Advanced functions: EL, CorridorDIM, CLO

— DALI-2 part ext. 251, 252 and 253

— Parameters changeable via Lifud programmer

— 16-shift output current adjustable via DIP switch

— According to Zhaga Book13

— Surge level: PUSH: 1kV; L-N: 2kV; L/N-PE: 2kV

Typical applications

— For linear light and tri-proof light

— For office, commercial and decorative lighting

Product parameters

— Output current 75-450mA

— Output power 18-60W

— Input voltage 198–264Vac

— Output voltage 54-240Vdc

— Efficiency 93%

sales@prom-elec.com / ООО ПРОМЭЛЕКТРОНИКА

Electrical data

Input data

Rated input voltage	220 ... 240V
AC voltage range	198 ... 264V
Mains frequency	0/50/60Hz
Input voltage DC	176...280V
Power factor	≥0.96
Efficiency in max. power	≥93%
THD	<8%
Input current	0.38A Max @AC input 0.08-0.30A @DC input
Inrush current	28A[1)]
Loading number on circuit breaker 10 A (B)	15
Loading number on circuit breaker 10 A (C)	24
Loading number on circuit breaker 16 A (B)	17
Loading number on circuit breaker 16 A (C)	28
Protective conductor current	≤3.5mA
Stand-by power consumption	≤0.5W

Output data

Nominal output voltage	54... 240V
Nominal output current	75...450mA
Default output current	75mA
Current setting	DIP switch (please see the DIP switch definition)
Maximum output power	60W
Nominal output power	18 ... 60W
Output ripple current (100 Hz)	±3.3 %
Flicker	According to IEEE Std 1789-2015
CIE SVM	≤0.4
IEC-Pst	≤1
Output current tolerance	±5%
Temperature tolerance	±10%
AC start-up time	<1.2S
DC start-up time	<0.8S
AC/DC switch time	<0.8S

Safety

Withstanding voltage	I/P-PE, O/P-PE, I/P-DA1/DA2, O/P-DA1/DA2, DA1/DA2-PE: 1.5kV&5mA&60S
Surge capability (L-N)	2kV
Surge capability (L/N-PE)	2kV
PUSH[2)]	1kV
Insulation resistance	I/P-PE, O/P-PE, I/P-DA1/DA2, O/P-DA1/DA2, DA1/DA2-PE: >100MΩ@500VDC
Lifetime	Up to 100,000 hours[3)]

Guarantee	5 years [4]

1) t =210μs
2) The surge test wiring at the PUSH terminal is connected in parallel with L-N
3) For details, please refer to the service life table
4) 5 years @Tc≤80℃

Characteristic diagrams

Operating Window

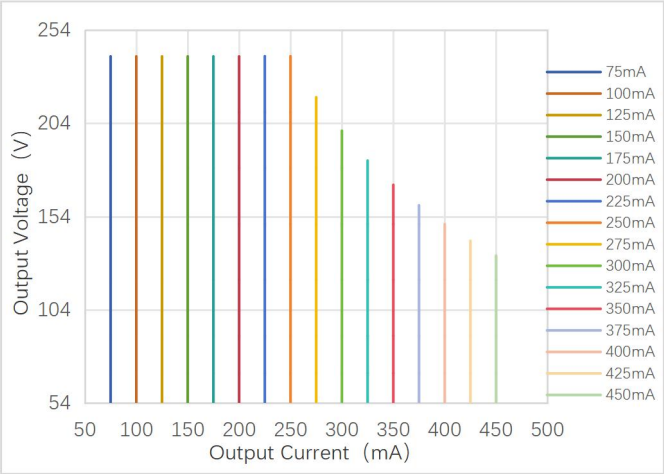

Typical Efficiency vs Load

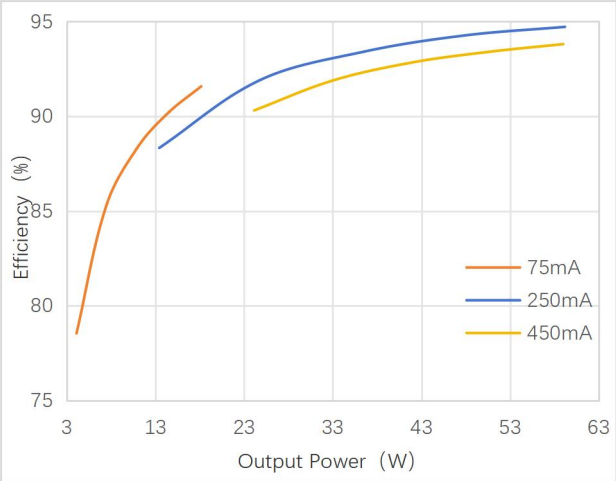

Typical Power Factor vs Load

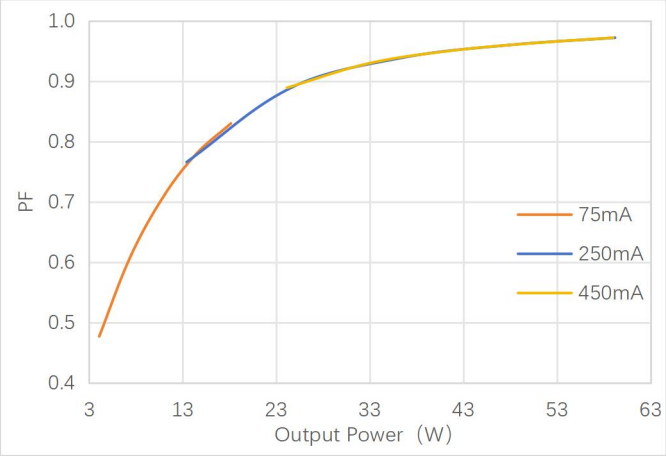

Typical THD vs Load

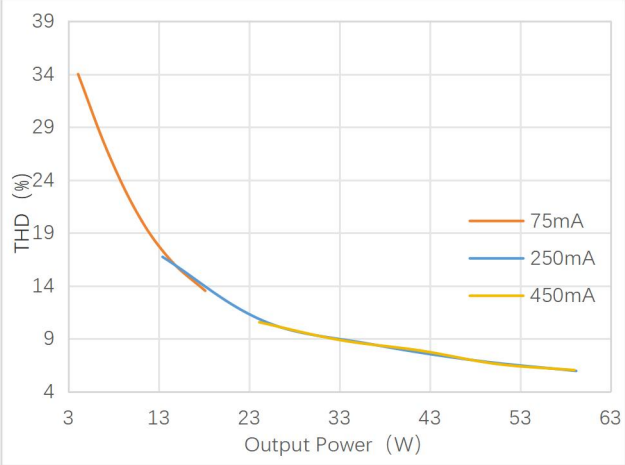

Lifespan

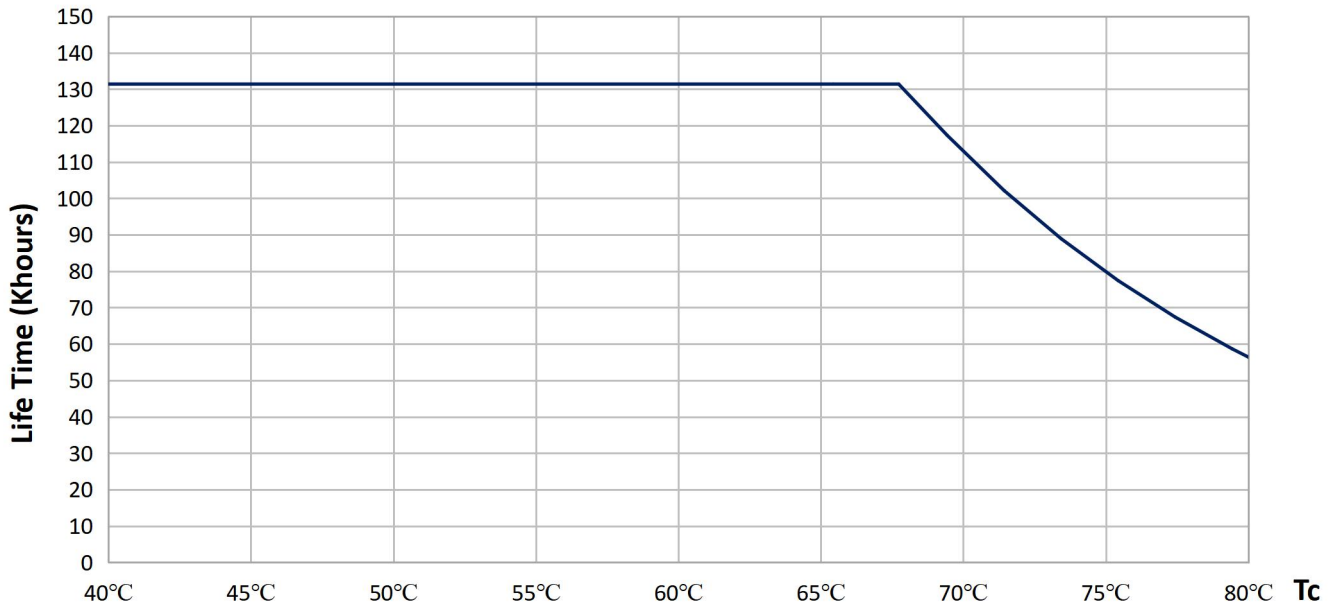

Service life

Model	Iout	Pout	Ta	55°C	65°C
LF-FSD060YB-E	450mA	60W	Tc	70°C	80°C
			Lifetime	>100,000h	>50,000h

Note: The design life of the LED driver is as described above under reference conditions. The failure probability is less than 10%.

The relationship between Tc and Ta also depends on the design of the luminaire.

Dimensions

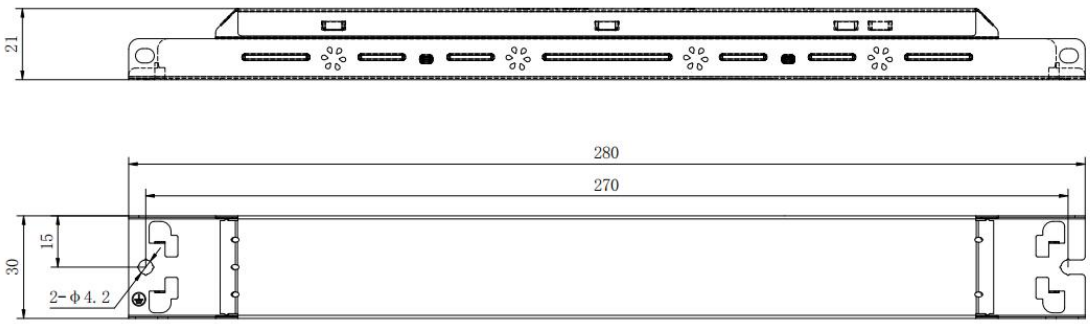

Mounting hole spacing, length	270mm
Product weight	164g
Cable cross-section, input side	0.5 ... 1.5 mm²
Cable cross-section, output side	0.5 ... 1.5 mm²
Wire preparation length, input side	7 ... 8mm
Wire preparation length, output side	7 ... 8mm

Length	280mm
Width	30.0mm
Height	21.0mm

Colors & materials

Casing material	Color coated sheet
Casing color	White

Temperature & operating conditions

Ambient temperature range	-30℃ - +65℃
Maximum temperature at tc test point	80℃
Temperature range at storage	-30℃ - +80℃ (6 months in Class I environment)
Humidity range at storage	20-75%RH (no condensation)
Humidity during operation	20-95%RH (no condensation)
Atmospheric pressure	86-106KPa
RoHS	RoHS 2.0 (EU) 2015/863

Tc test point

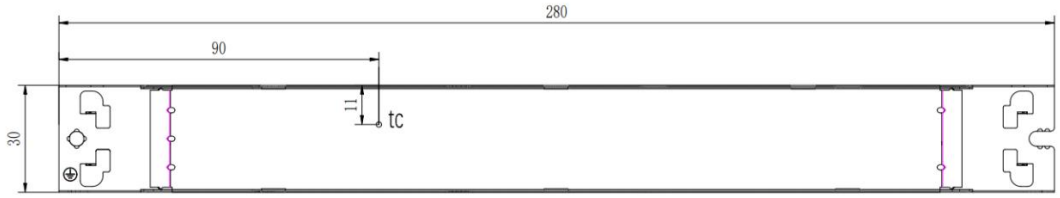

Tc point is at the top of LED driver

Product terminal

Input		Output	
AC-L (Gray)	AC live wire input	**LED+ (Red)**	Positive terminal output of LED driver
AC-N (Gray)	AC neutral wire input	**- (Black)**	Negative terminal output of LED series connection
/	/	**+ (Red)**	Positive terminal output of LED series connection
⏚ **(Gray)**	Earth wire	**LED-(Black)**	Negative terminal output of LED driver
DA1 PUSH (Green)	DALI1/PUSH dimming input		
DA2 PUSH (Green)	DALI2/PUSH dimming input		

DIP switch definition

Output current	Output voltage	DIP switch 1	DIP switch 2	DIP switch 3	DIP switch 4
*75mA	54-240Vdc	-	-	-	-
100mA	54-240Vdc	ON	-	-	-
125mA	54-240Vdc	-	ON	-	-
150mA	54-240Vdc	ON	ON	-	-
175mA	54-240Vdc	-	-	ON	-
200mA	54-240Vdc	ON	-	ON	-
225mA	54-240Vdc	-	ON	ON	-
250mA	54-240Vdc	ON	ON	ON	-
275mA	54-218Vdc	-	-	-	ON
300mA	54-200Vdc	ON	-	-	ON
325mA	54-184Vdc	-	ON	-	ON
350mA	54-171Vdc	ON	ON	-	ON
375mA	54-160Vdc	-	-	ON	ON
400mA	54-150Vdc	ON	-	ON	ON
425mA	54-141Vdc	-	ON	ON	ON
450mA	54-133Vdc	ON	ON	ON	ON

Note: “-”: OFF; “*”: default current. When adjusting the output current via the DIP switch, please disconnect input AC first so as to use the DIP switch without the input AC connected.

Wiring diagrams of output terminal

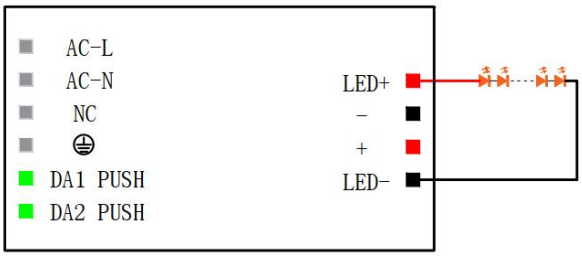

Wiring diagram of single light fixture

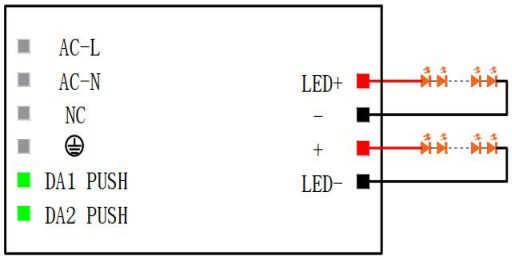

Wiring diagram of double light fixtures

Protective characteristics

Protective type		Min.	Typ.	Max.	Introduction
Input undervoltage protection	Protective voltage	145Vac	150Vac	155Vac	When the input voltage is lower than the protective voltage, the light will be off.
	Restore voltage	156Vac	160Vac	165Vac	When the input voltage is higher than the restore voltage, the light can be automatically turned on.
Input overvoltage protection	Protective voltage	310Vac	320Vac	330Vac	When the input voltage is higher than the protective voltage, the light will be off.
	Restore voltage	261Vac	270Vac	278Vac	When the input voltage is lower than the restore voltage, the light can be automatically turned on.

Note: By default, only the input undervoltage and input overvoltage states are reported, and the light will not be turned off. It will enter the power-off protection mode only after the software settings are activated.

Protective characteristics schematic diagrams

Schematic diagram of input undervoltage protection

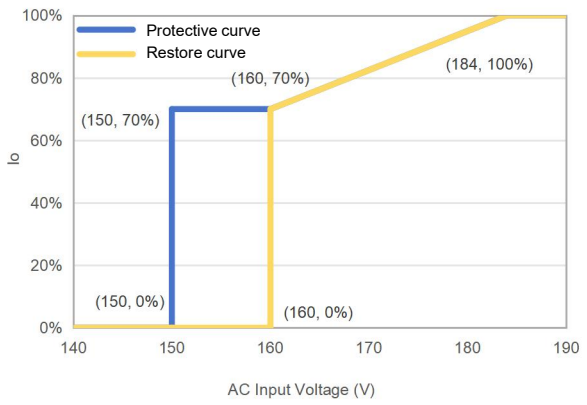

Schematic diagram of input overvoltage protection

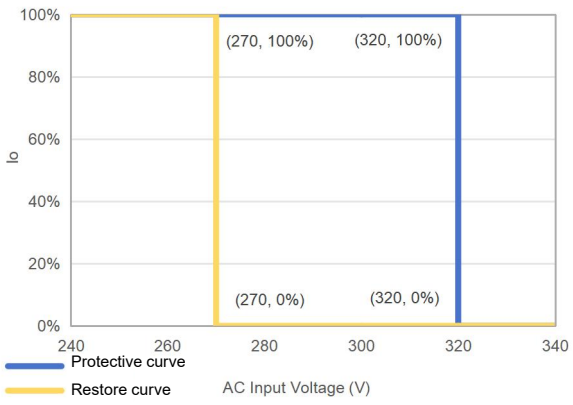

Capabilities

Dimmable	DALI/PUSH dimmable
Dimming range	1 ... 100%
Overload protection	Yes
Short circuit protection	Hiccup mode (Self-recovery)
No-load protection	<250V
Suitable for fixtures with prot. class	I
Programming interface	DALI
Control interface	DALI
Number of channels	1 channel
CorridorDIM	Yes
EL	Yes
CLO	Yes
DALI Part 251 252 253	Yes

Dimming function instructions

- **DALI dimming function**

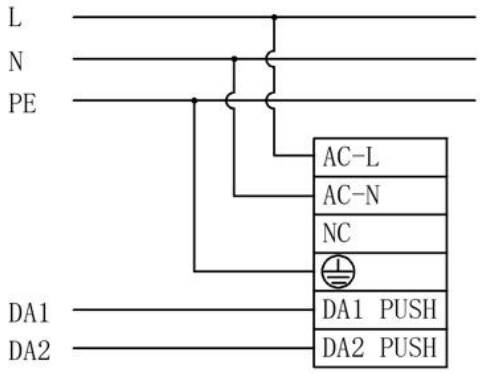

Wiring diagram of DALI dimming

① Default setting brightness is 100%.

② Connect DALI signal to DA1 PUSH and DA2 PUSH.

③ DALI protocol includes Max.16 scene groups.

④ Maximum number of LED drivers connected in parallel in DALI dimming mode: 64 pcs.

⑤ Current at minimum dimming of DALI dimming: 7mA.

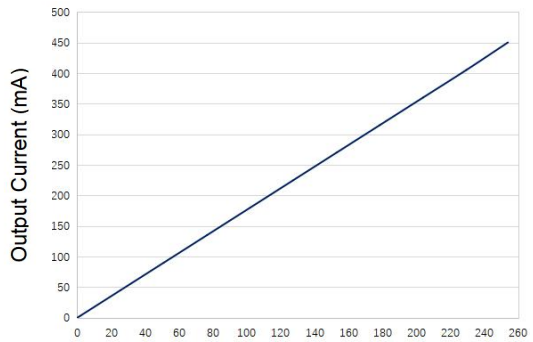

Linear dimming

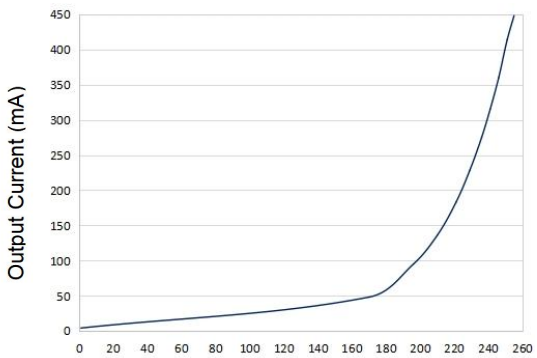

Logarithmic dimming

Note: The DALI and PUSH dimming functions cannot be used simultaneously; otherwise, the DALI dimmer will be damaged.

- **PUSH dimming function**

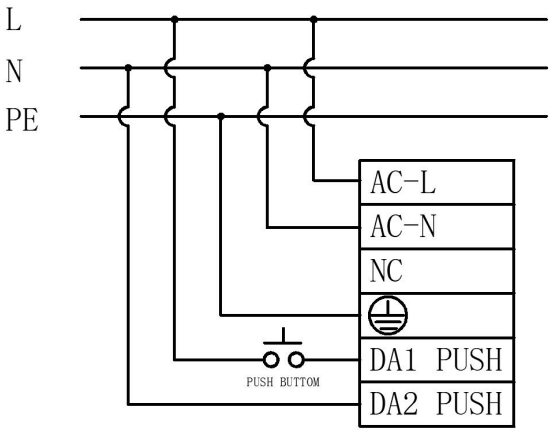

Wiring diagram of PUSH dimming

Switch from DALI mode to PUSH mode: short press PUSH switch to enable PUSH dimming function.

① Connect PUSH switch between AC-L and DA1 PUSH in series and connect DA2 PUSH to AC-N.

② Make sure that AC-L and AC-N are NOT directly connected to DA1 PUSH and DA2 PUSH terminals.

③ Make sure that PUSH switch is off before the AC is powered on; operate PUSH after the AC is powered on.

④ Make sure the PUSH switch is off before disconnecting the AC.

⑤ If you have any questions about the wiring and operation, please confirm with Lifud FAE.

⑥ Wrong wiring or operation may cause damage to the driver.

Operation	Duration	Function
Instant Push	0.1-0.5S	LED light on/off
Long Push	0.6-9S	LED light dims up/down
Reset Push	>9S	Long press PUSH for more than 9s to reset the brightness to 50%. Wait for 5s, then short press PUSH to turn off the light. At last, long press PUSH again to turn on the light and synchronize the dimming direction

① The PUSH operation won't cause any variations on LED driver if it's less than 0.1S.

② Current at minimum dimming of PUSH dimming: 7mA.

③ The PUSH dimming mode has the memory function in case of any power failure. When the LED driver is powered on again, the light will return to the previous state before power failure.

④ The present dimming direction of PUSH dimming is opposite to the former one.

⑤ In automatic mode, long press for more than 3 minutes to enter the corridor dimming function.

- ## Corridor dimming function

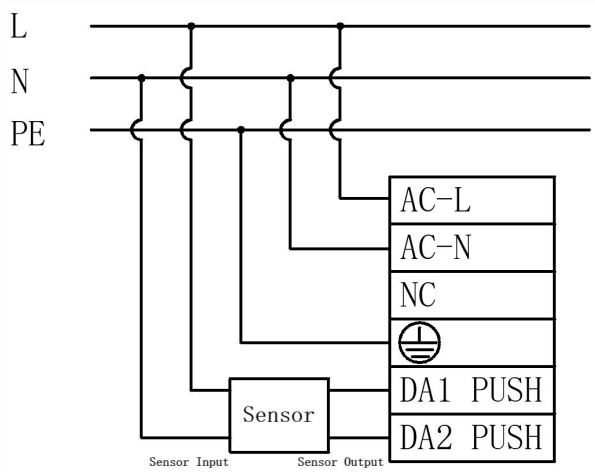

Wiring diagram of corridor dimming

Operations for entering corridor lighting mode

Approach 1: use Lifud programmer to enable the driver's corridor lighting mode and set parameters.

Approach 2: keep pressing PUSH for 3+ mins so as to switch to the corridor lighting mode.

Approach 3: keep the effective sensing signal for 3+ mins (set the sensor's hold time to 3+ mins) to enable the corridor lighting mode.

Remarks:

1. In the automatic detection mode, the driver can be switched from PUSH mode to corridor lighting mode by approach 2 and 3, and its brightness will dim up to 50%; long press for 3 mins and then it dims down first and then dims up, which means the driver has entered the corridor lighting mode.

2. After activating the corridor dimming mode, PUSH DIM is turned off.

3. In the case of AC input and any level of brightness in the corridor lighting mode, switching to DC and then returning to AC will restart the corridor lighting mode.

Operations for exiting corridor lighting mode

Approach 1: use Lifud programmer to choose other modes and exit corridor lighting mode.

Approach 2: connect the driver to the DALI master to send DALI command, and the driver will return to the DALI dimming mode.

Approach 3: connect the driver to the PUSH switch and continuously press the switch 10 times within 10 secs, and the driver will return to the PUSH dimming mode.

Remark:

1. The 3-sec or above single press or release will cause the press number to be counted as 0.

2. The approach 2 and 3 CANNOT be used if the corridor lighting mode of driver is set via Lifud programmer.

Working process of corridor dimming mode

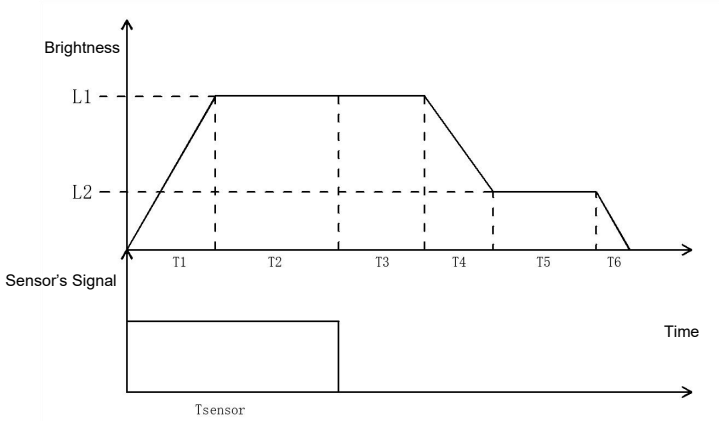

Symbol	Name	Default value	Available setting scope
T1	Fade-in time of sensing	1s	0-100s
T2	Holding time of sensing	Depends on sensor	Depends on sensor
T3	Waiting time of sensing	180s	0-59999s, 60000s (infinite)
T4	Fade-out time of sensing	5s	0-100s
T5	Unattended time	60000s (infinite)	0-59999s, 60000s (infinite)
T6	Fade-out off time	0s	0-100s
L1	Sensing brightness	100%	0-100%
L2	Unattended brightness	10%	0-100%

Emergency function instruction

The default output current is 15% Io max in the case of DC emergency input.

Emergency input voltage: 176-280Vdc

Note:

1. The emergency output current can be set by Lifud programmer and programming software.

2. It can be set from 0 to 100%.

3. If the emergency mode is off, input current is DC and the working mode is the same as the AC input.

4. In the case of mains input, the brightness is random when using PUSH dimming. When the driver enters the emergency lighting mode and then reconnects AC, the light brightness will remain the one set via PUSH switch when mains is connected.

5. In the case of mains input, the brightness is random when using DALI dimming. When the driver enters the emergency lighting mode and then reconnects AC, the light brightness will return to the brightness when DALI is powered on.

6. When the input is less than 185VDC, the output is derated. At 160VDC, it drops to about 70% of the peak value.

7. After enabling the overvoltage and undervoltage protection function, the product will be power-off when the voltage is less than 165VDC and power-on when the voltage is greater than 180VDC; the product will be power-off when the voltage is greater than 286VDC and power-on when the voltage is less than 276VDC. (Deviation value: ±5V)

Programmer tools and software

Product	Name	Brand	Model	Software
	Lifud programmer	LIFUD	LF-SCS080C	Lifud SmartSet

Read/write and parameter configuration

Programming project	Default settings	Parameters settings	Read/Write
Production information	-	No	Read
Operating mode	Automatic detection (DALI/PUSH)	Yes	Read/Write
EL	15% (default)	Yes	Read/Write
Input over/undervoltage protection	Inactivated	Yes	Read/Write
CorridorDIM	Inactivated	Yes	Read/Write
CLO	Inactivated	Yes	Read/Write
DALI Part 251	Activated	Yes	Read/Write
DALI Part 252	Activated	Can be reset only	Read/Write
DALI Part 253	Activated	Can be reset only	Read/Write

Function instructions

①Lifud programmer

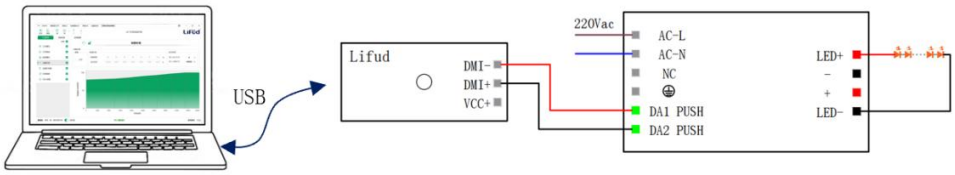

PC Software Lifud Programmer LED Driver

Note: When using the programmer, the driver must be powered on with AC for normal reading and writing.

Certificates & standards

Approval marks	ENEC, CE, CB, EL, RCM, DALI-2
Standards	EN 61347-2-13; EN 61347-1; EN 62384; EN 62493; EN 55015; EN 61547; EN 61000-3-2; EN 61000-3-3; IEC61347-1; IEC61347-2-13; EN IEC 61347-2-13 Annex J; AS 61347.2.13 & AS/NZS 61347.1NZS 61347.1 DALI-2 certified (Part 101, 102, 207, 251, 252, 253)
Type of protection	IP20

Logistical data

Product	Packaging unit (Pieces/Unit)	Dimensions (L*W*H)	Volume	Gross weight
LF-FSD060YB-E	42	385m*285mm*210mm	23.04 dm³	7.8kg±5%

Test equipment & condition

Test equipment	AC power source: CHROMA6530, digital power meter: CHROMA66202, oscilloscope: Tektronix DPO3014, DC electronic load: M9712B, LED board, constant temperature and humidity chamber, lightning surge generator: Everfine EMS61000-5B, rapid group pulse generator: Everfine EMS61000-4A, spectroanalyzer: KH3935, hi-pot tester: EEC SE7440, flicker tester (flicker-free coefficient test): Everfine LFA-3000, etc.
Compatibility of DALI dimming	Yuanhao Master, Simon Master, Philips Master DDBC120-DALI, OSRAM Master, Helvar Master 905 Router, Tridonic Master and HDL MC64-DALI431 Master

If there are no special remarks, the above parameters are tested at the ambient temperature of 25℃, humidity of 50%, maximum output power and input voltage of 230Vac/50Hz.

Additional information

1. It is recommended that user install the over voltage protection, under voltage protection and surge protection devices in the power supply circuits of light fixtures to ensure electricity safety.

2. The LED driver used in combination with the end device is one of the accessories of the whole light fixture, and the EMC of the whole light fixture is not only susceptible to the driver itself, but to the LED light fixture and the whole light fixture's wiring. Thus, the manufacturer of LED light fixture should re-confirm the EMC of the whole light fixture before the whole light fixture is finished.

3. The number of LED drivers that can be connected to a circuit breaker and the inrush current are tested under the same conditions.

4. The PC cover, casing and end cap for assembling the LED driver in the light fixture must meet the fire rating of UL94-V0 or above.

5. DC input is only for emergency.

6. In no-load condition, it is recommended that user not directly connect the LED driver to the light fixture in case that the light fixture is damaged.

7. It is well-advised that the withstanding voltage of LEDs and aluminum substrates be >3kVac.

8. When the load power of the product is <60W, it will output at the set constant current; when the load power is >60W, it will output at a constant power of 60W±2W.

9. The default current of LED driver is 75mA.

10. When using other DALI masters, please test their compatibilities with Lifud LED driver in advance.

11. If the parasitic capacitance between LEDs and the PCBA is too large, and the light fixture is grounded, there will be a slight flicker at the moment of power on.

12. Lifud Technology Co., Ltd. reserves the right to interpret any content of this specification.

Transportation & storage

Suitable transportation means: vehicles, boats and aeroplanes.

In transit, it is necessary to prepare awnings for rain or sun protection. Moreover, please keep civilized loading and unloading to prevent the vibration or impact on LED driver as much as possible.

The storage of LED driver shall conform to the standard of Class I environment. When using LED drivers which have been stored for more than 6 months, please re-test them firstly. Do not use them unless they are tested to be qualified.

Cautions

Please use Lifud LED driver according to its parameters in the specification, otherwise the LED driver may malfunction.

Using any incompatible light fixtures or those that have not been certified may cause fire, explosion or other risks.

Man-made damage is beyond the scope of Lifud warranty service.

Disclaimer

Subject to change without notice. Errors and omissions excepted. Always make sure to use the most recent release.