OptoSupply
Light It Up

3mm Yellow Green 2in1 Housing LED

OSG8NX3E34B-3F2B

(LED Part No: OSG8NU3E34B)

■Features

- High Luminous LEDs
- 3mm Round Standard Directivity
- UV Resistant Epoxy
- Color Diffused Type
- Holder Color: Black

■Applications

- Indicate Lamp
- Toys/Games/ Audio
- Other Lighting

■Outline Dimension

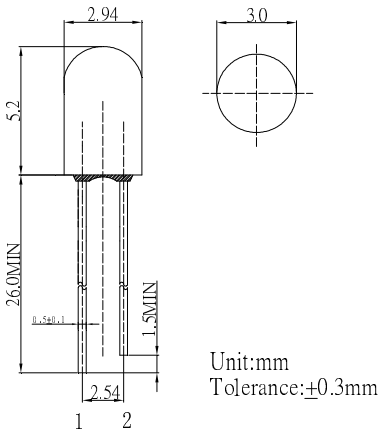

LED Outline Dimension

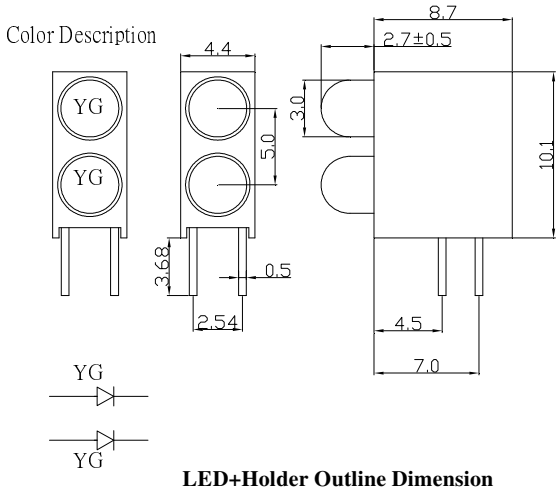

LED+Holder Outline Dimension

■Absolute Maximum Rating (Ta=25℃)

Item	Symbol	Value	Unit
DC Forward Current	I_F	30	mA
Pulse Forward Current*	I_{FP}	100	mA
Reverse Voltage	V_R	5	V
Power Dissipation	P_D	78	mW
Operating Temperature	Topr	-30~ +85	℃
Storage Temperature	Tstg	-40 ~ +100	℃
Lead Soldering Temperature	Tsol	260℃/5sec	-

*Pulse width Max.10ms Duty ratio max 1/10

■Directivity

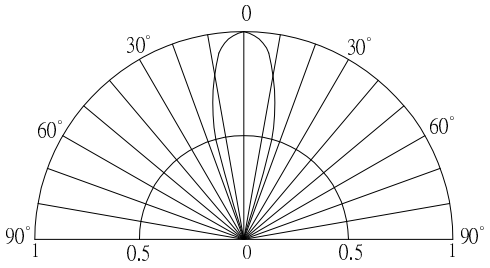

■Electrical -Optical Characteristics (Ta=25℃)

Item	Symbol	Condition	Min.	Typ.	Max.	Unit
DC Forward Voltage	V_F	I_F=20mA	1.8	2.1	2.6	V
DC Reverse Current	I_R	V_R=5V	-	-	10	μA
Domi. Wavelength	λ_D	I_F=20mA	565	570	575	nm
Luminous Intensity	Iv	I_F=20mA	40	60	-	mcd
50% Power Angle	$2\theta_{1/2}$	I_F=20mA	-	30	-	deg

*1 Tolerance of measurements of dominant wavelength is ±1nm
*2 Tolerance of measurements of luminous intensity is ±15%
*3 Tolerance of measurements of forward voltage is±0.1V

LED & Application Technologies

ATTENTION
OBSERVE PRECAUTIONS
ELECTROSTATIC
SENSITIVE DEVICES

sales@prom-elec.com / ООО ПРОМЭЛЕКТРОНИКА