Two-circuit Limit Switch/Long-life Two-circuit Limit Switch

WL-N/WLM-N

Select the Best Two-circuit Switch for the Operating Environment and Application from a Wide Range of Models

- A wide selection of models is available, including General-purpose, Environment-resistant, and Spatter-prevention Switches.
- Standard-feature gold-clad crossbar contacts provide high reliability.
  Appllicable to either standard loads or microloads.
- Switches with Lever Actuators provide 90° overtravel, one-side operation, and four-direction head mounting.
- Approved standards: EN/IEC, UL, cUL, and CCC.
  Contact your OMRON representative for information on approved models.

⚠ Be sure to read ***Safety Precautions*** on page 44 to 48 and ***Safety Precautions for All Limit Switches***.

Features

Standard Switches

Many Variations in Standard Limit Switches

A Wide Range of Models

The series includes includes many different actuators that you select to match the workpiece shape and motion, and a wide range of Switch variations, such as models with operation indicators for easier working and maintenance and models with different types of connectors.

Environment-resistant Switches

Select from Six Types of Environment Resistance

The series includes Airtight Switches, Hermetic Switches, Heat-resistant Switches, Low-temperature Switches, Corrosion-proof switches, and Weather-proof Switches. You can select the model based on the onsite environment.

Spatter-prevention Switches

Excellent Performance on Arc Welding Lines or Sites with Spattering Cutting Powder

Ideal for Welding Sites

These Switches use stainless steel or resin to prevent the adhesion of spatter.
They can be used to reduce problems caused by zinc power generated during welding.

Long-life Switches

Mechanical Endurance of 30 Million Operations

Long-life Models for High-frequency Applications

A mechanical durability of 30 million operations minimum is provided.
The head features a double-seal structure with a head cap and oil seal.

Features Common to All Switches

DPDB Operation

The double-pole, double-break structure ensures circuit braking.

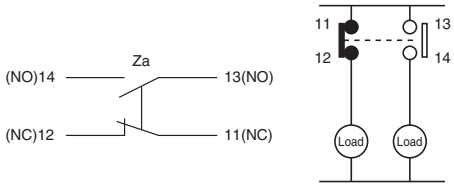

Degree of Protection; IP67

Approved Standards to Aid Export Machines

The Switches are certified for EN/IEC, UL, cUL, and CCC making them ideal for export machines.

Applicable to Either Standard Loads or Microloads

Standard-feature gold-clad contacts provide high reliability.
The use of a high-contact-pressure crossbar structure also increases reliability.

Easy to Work With

Downsizing of the built-in switch has increased the space to house the wiring.
The insulating paper that was often in the way when wiring has been eliminated.
Nickle-plated steel screws are used for the terminal screws.
The screws adhere to magnetized screwdrivers to prevent dropping and loosing them.

Models with Connectors to Reduce Wiring

A neon lamp or LED indicates the operating status.
The 3D structure of the lamp cover disperses light so you can check the operating status from the side.

sales@prom-elec.com / ООО ПРОМЭЛЕКТРОНИКА

Product Configuration

- General-purpose
  - Standard
    - • Basic Switches — WLC□-N
    - • High-sensitivity Switches — WLG□-N
    - • High-precision Switches — WLGCA2-N
    - • Protective Switches — WLCA32-□-N
  - Operation indicators
    - • Indicator-equipped Switches: Neon lamps — WL□-LE-N
    - • Indicator-equipped Switches: Light emitting diodes (LED) — WL□-LD-N
  - Sensor I/O connectors
    - • Direct-wired Switches — WL-□LDK□-N
    - • Pre-wired Switches — WL□-□LD-M1□-N
WL□-□LD-AGJ-N
WL□-□LD-DGJ-N
WL□-□LD-DK1EJ-N
- Environment-resistant
  - • Airtight Switches — WL□-55-N
  - • Hermetic Switches — WL□-139-N
WL□-140-N
WL□-141-N
WL□-145-N
WL□-RP40-N
WL□-RP60-N
  - • Heat-resistant Switches — WL□-TH-N
  - • Low-temperature Switches — WL□-TC-N
  - • Corrosion-proof Switches — WL□-RP-N
  - • Weather-proof Switches — WL□-P1-N
- Spatter-prevention
  - • Basic Switches — WLC□-□S-N
  - • High-sensitivity Switches — WLG□-□S-N
  - • High-precision Switches — WLGCA2-□S-N
- Long-life
  - • Basic Switches — WLMCA2-□-N
  - • High-sensitivity Switches — WLMG2-□-N
  - • High-precision Switches — WLMGCA2-□-N

Environment-resistant Switches

Type	Model	Environment-resistant: Application	Environment-resistant: Environment-resistant construction	Environment-resistant: Applicable models
Airtight seal	**WL□-55-N**	For uses in locations subject to cutting oil or water	Uses an airtight built-in switch. Note: Use the SC Connector for the conduit opening.	All models except the low-temperature and heat-resistant models Note: Models can be produced using standard actuators.
Hermetic seal (Molded terminals/ Anti-coolant)	**WL□-139-N** **WL□-140-N** **WL□-141-N** **WL□-145-N** **WL□-RP40-N** **WL□-RP60-N**		Refer to page 29 for information on the environment-resistant construction of Switches with Hermetic Seals.	All models except the low-temperature and heat-resistant models Note: Models can be produced using standard actuators. Only the WLCA2-N, WLGCA2-N, or WLG2-N can be produced for the WL□-141-N and WL□-145-N.
Low-temperature	**WL□-TC-N**	Can be used at a temperature of –40°C (operating temperature range: –40 to 40°C), but cannot withstand icing.	• Uses a general-purpose built-in switch. • Epichlorhydrin rubber is used for rubber parts such as the O-ring, gasket, etc.	All models except airtight seal, hermetic seal, heat-resistant, corrosion-proof, and indicator-equipped models
Heat-resistant	**WL□-TH-N**	Can be used in temperatures of 120°C (operating temperature range: 5 to 120°C).	• Fluorine rubber is used for rubber parts such as the O-ring, gasket, etc.	All models except airtight seal, hermetic seal, heat-resistant, corrosion-proof, and indicator-equipped, nylon roller (WLCA2-26N-N), seal roller models, and resin rod (WLNJ-2-N) models
Corrosion-proof	**WL□-RP-N**	For use in locations subject to corrosive gases and chemicals.	• Diecast parts, such as the switch box, are made of corrosion-proof aluminum. • Rubber sealing parts are made of fluorine rubber, which aids in resisting oils and chemicals. • Exposed nuts and screws (except the actuator section) are made of stainless steel. • Moving and rotary parts such as rollers are made of sintered stainless steel or stainless steel. • The Head, box, and cover are yellow.	All models except fork lever lock (WLCA32-41 to -44-N), low-temperature, heat-resistant, and indicator-equipped models
Weather-proof	**WL□-P1-N**	For use in parking lots and other outdoor locations.	• Rubber parts are made from epichlorhydrin rubber, which has a high-tolerance to changes in temperature. • Rollers are made of stainless steel to improve corrosion resistance. • Exposed nuts and screws are made of stainless steel.	Only basic (WLCA2-N/CA12-N/CL-N), and high-sensitivity overtravel (WLG2-N/G12-N/GL-N) models (excluding heat-resistant models). This does not apply to Low-temperature or Heat-resistance, or Indicator-equipped Switches.

Selection Guide

With the WL-N Series, OMRON will combine the switch, Actuator, and wiring method required to build the ideal switch for your application.

The WL-N Series consists of four basic types: General-purpose, Environment-resistant, Spatter-protection, and Long-life Switches. WLCA2-N Switches can be used for the most common applications.

According to Operating Environment

	Environment	Key specifications	Models	
Ambient operating temperature	Normal	−10°C / +80°C Water-resistant to IP67.	WL□-N WLM□-N	General-purpose Switches Long-life Switches
	High-temperature	+5°C / +120°C To increase heat resistance, the rubber material (fluorine rubber) and the plunger material (PEEK) have been changed.	WL□-TH-N	Heat-resistant Switches *1
	Low-temperature	−40°C / +40°C To increase resistance to cold, epichlorhydrin rubber and other measures are used.	WL□-TC-N	Low-temperature Switches *1
Operating environment	Outdoors	Rubber parts are made from epichlorhydrin rubber, which has a high-tolerance to changes in temperature. Stainless steel is used for the screws. Rollers are made of stainless steel to provide superior corrosion resistance.	WL□-P1-N	Weather-proof Switches *1
	Chemicals and oil	Corrosion-proof specifications have been used for the housing, fluorine rubber has been used for rubber parts, and stainless steel has been used for screws and nuts (except for the actuator) to increase resistance to oils, chemicals, and weather.	WL□-RP-N	Corrosion-proof Switches *1
	Water drops and mist	Uses an airtight built-in switch.	WL□-55-N	Airtight Switches *1
	Constant water drops and mist	Cables are attached. Uses a general-purpose built-in switch. The cover screws, case cover, and conduit opening are molded from epoxy resin to increase the seal. (The cover cannot be removed.)	WL□-139-N Hermetic, Molded-terminal Switches *1, *2	
		Cables are attached. Uses an airtight built-in switch. The case cover and conduit opening are molded from epoxy resin to increase the seal. (The cover cannot be removed.) The SC connector can be removed, so it is possible to use flexible conduit for the cable.	WL□-RP40-N Hermetic, Molded-terminal Switches *1, *2	
		Cables are attached. Uses an airtight built-in switch. The cover screws, case cover, and conduit opening are molded from epoxy resin to increase the seal. (The cover cannot be removed.)	WL□-140-N Hermetic, Molded-terminal Switches *1, *2	
	Constant water drops or splattering cutting powder	Cables are attached. Uses an airtight built-in switch. The cover screws, case cover, and conduit opening are molded from epoxy resin to increase the seal. (The cover cannot be removed.) Double seal against oil including head cap countermeasure for cutting chips and an oil seal. -141: The Head section is molded from epoxy resin; Head direction cannot be changed. -145: The Head section is molded from epoxy resin; Head can be in any of 4 directions.	WL□-141-N, -145-N Hermetic, Molded-terminal Switches *1, *2 (Only the WLCA2-N, WLG2-N, and WLGCA2-N, can be produced.)	
	Coolant	Cables are attached. Uses an airtight built-in switch. The cover screws, case cover, conduit opening, and head screws are molded from epoxy resin to increase the seal. (The cover and head cannot be removed.) Rubber parts are made from fluorine rubber to increase resistance to coolant.	WL□-RP60-N Hermetic, Molded-terminal Switches *1, *2	
	Spattering from welding	To prevent spatter during welding, a heat-resistant resin is used for the indicator cover and screws and rollers are all made from stainless steel.	WL□-S-N	Spatter-prevention Switches

*1. Not all functions can be combined with environment-resistant switches. Refer to the applicable models on the previous page.
*2. Refer to page 29 for information on the construction of Hermetic Switches.

According to Application Conditions

	Conditions	Key specifications	Models
Load	Switching standard loads	10 A at 125,250, or 500 VAC 0.8 A at 125 VDC 0.4 A at 250 VDC	Entire WL□-□-N Series Applicable to either standard loads or microloads.
	Switching microloads	0.1 A at 125 VAC, resistive load 0.1 A at 30 VDC, resistive load	
Durability	Normal durability	Mechanical: 15 million operation min. (10 million operation min. for high-sensitivity models or flexible rod models)	WL□-N General-purpose Switches WL□-S-N Spatter-prevention Switches
	Long-life	Mechanical: 30 million operation min.	WLM□-N Long-life Switches

According to Ease of Installation and Maintenance

	Conditions	Key specifications	Models
Operation indicator	Daily inspections and maintenance checks	Neon lamp 125 to 250 VAC Switching light-ON between operating/not operating. (Switching is not possible for Switches with Molded Terminals.)	WL□-LE-N General-purpose, Indicator-equipped (Neon Lamp) Switches WL□-LES-N Spatter-prevention, Indicator-equipped (Neon Lamp) Switches
		LED 10 to 115 VAC/DC Switching light-ON between operating/not operating. (Switching not possible for models with molded terminals.)	WL□-LD-N General-purpose, Indicator-equipped (LED) Switches WL□-LDS-N Spatter-prevention, Indicator-equipped (LED) Switches
Wiring specification	Screw tightening and installation	Screw terminals. No ground terminal. Conduit size: G1/2	WL□-N General-purpose Switches WLM□-N Long-life Switches
		Screw terminals. Ground terminal. Conduit size: 4 sizes	WL□-N General-purpose Switches
	One-touch connector attachment	Direct-wired connector, 2-conductor. Greatly reduces wiring work.	WL□-□LDK13□-N General-purpose, Direct-wired Connector Switches WLM□-LDK13□-N Long-life, Direct-wired Connector Switches
		Direct-wired connector, 4-conductor. Greatly reduces wiring work.	WL□-□LDK43□-N General-purpose, Direct-wired Connector Switches WLM□-LDK43□-N Long-life, Direct-wired Connector Switches
	Connector attachment in control and relay boxes	Pre-wired connector, 2-conductor. Greatly reduces wiring work. Smartclick connectors for even easier maintenance.	WL□-□LD-M1□J-N General-purpose, Pre-wired Connector Switches WL□-□S-M1□J-1-N Spatter-prevention, Pre-wired Connector Switches WLM□-LD-M1□J-N Long-life, Pre-wired Connector Switches
		Pre-wired connector, 4-conductor. Greatly reduces wiring work. Smartclick connectors for even easier maintenance.	WL□-□LD-□GJ-N General-purpose, Pre-wired Connector Switches WL□-□S-□GJS-N Spatter-prevention, Pre-wired Connector Switches WLM□-LD-□GJ-N Long-life, Pre-wired Connector Switches

According to Form of Operation

	Detection object	Key specifications	Models	
Operation angles	General	TT (total travel) 90° 90° PT (pretravel) 15° WLCA2-N, 25° WLCA2-2-N, 20° WLCA2-2N-N	WLCA2-N WLCA2-2-N WLCA2-2N-N WLCA2-□S-N WLMCA2-N	General-purpose Switches General-purpose Switches General-purpose Switches Spatter-prevention Switches Long-life Switches
	Passing dogs			
	Passing dogs, high sensitivity	90° 90° 10°	WLG2-N WLG2-□S-N WLMG2-N	General-purpose Switches Spatter-prevention Switches Long-life Switches
	High precision	90° 90° 5°	WLGCA2-N WLGCA2-□S-N WLMGCA2-N	General-purpose Switches Spatter-prevention Switches Long-life Switches
Actuators	Dogs and workpieces (Mounts in any of 4 directions)	R38 ● Short lever ● One-Horizontal operation possible. ● Head mounts in any of 4 directions.	WL□2-N WL□2-□S-N WLM□2-N	Roller Lever Actuators Roller Lever Actuators Roller Lever Actuators
		R50 ● Medium lever ● One-side operation possible. ● Head mounts in any of 4 directions.	WL□2-7-N	Roller Lever Actuators
		R63 ● Long lever ● One-side operation possible. ● Head mounts in any of 4 directions.	WL□2-8-N	Roller Lever Actuators
	Adjustable between dog and lever	R25 to 89 ● One-Horizontal operation possible. ● Head mounts in any of 4 directions.	WL□12-N	Adjustable Roller Lever Actuators
	Dogs or workpieces with large deflection	25 to 140 ● One-Horizontal operation possible. ● Head mounts in any of 4 directions.	WLCL-N	Adjustable Rod Lever Actuators
		350 to 380 ● One-side operation possible. ● Head mounts in any of 4 directions.	WLCAL4-N	Adjustable Rod Lever Actuator
		427.5 ● One-side operation possible. ● Head mounts in any of 4 directions.	WLCAL5-N	Rod Spring Lever Actuator
	Round-trip operation of passing dogs	● Head mounts in any of 4 directions.	WLCA32-41-N	Fork Lever Lock Actuator
		● Head mounts in any of 4 directions.	WLCA32-42-N	Fork Lever Lock Actuator
		● Head mounts in any of 4 directions.	WLCA32-43-N	Fork Lever Lock Actuator
		● Head mounts in any of 4 directions.	WLCA32-44-N	Fork Lever Lock Actuator
	Cams or workpieces with vertical movement	● Equipped with sealing boot.	WLD18-N	Sealed Top Plunger Actuator
		● Head mounts in any of 4 directions.	WLSD-N	Horizontal Plunger Actuator
		● Equipped with sealing boot.	WLD38-N	Sealed Top-ball Plunger Actuator
		● Head mounts in any of 4 directions.	WLSD3-N	Horizontal-ball Plunger Actuator
		● Equipped with sealing boot.	WLD28-N	Sealed Top-roller Plunger Actuator
		● Head mounts in any of 4 directions.	WLSD2-N	Horizontal-roller Plunger Actuator

Application Examples

Detection of Passing Pallets on Production Lines

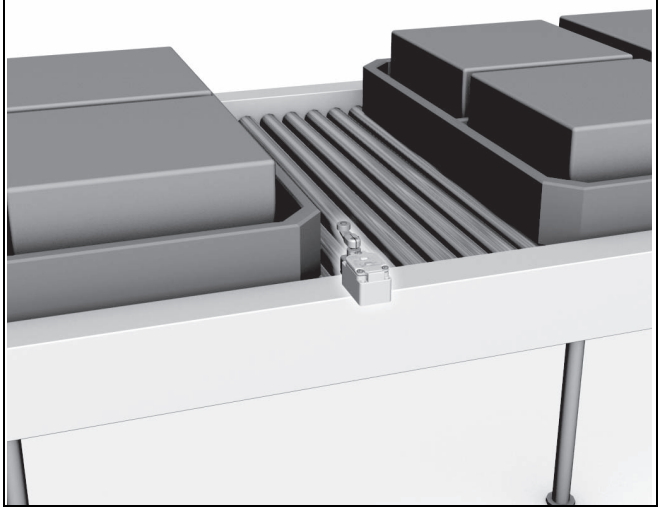

Detection of Work Table Origins (X, Y, and Z) on Machine Tools

Detection of Forward and Reverse Movement of Hydraulic Cylinders on Molding Machines

Detection of Arm Movement on Welding Robots

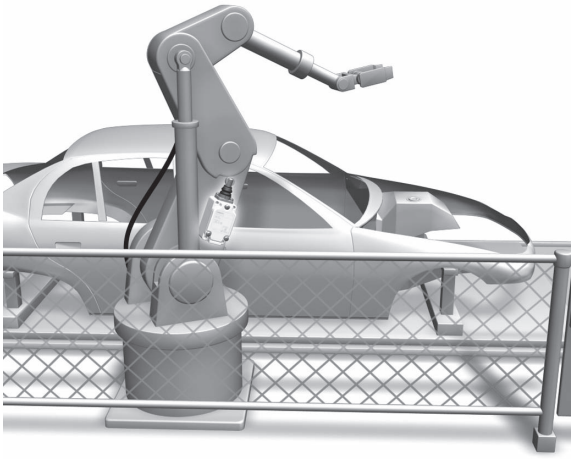

Detection of Car Pallet Positions in Parking Towers

Detection of Vertical Limits on Conveyor Systems

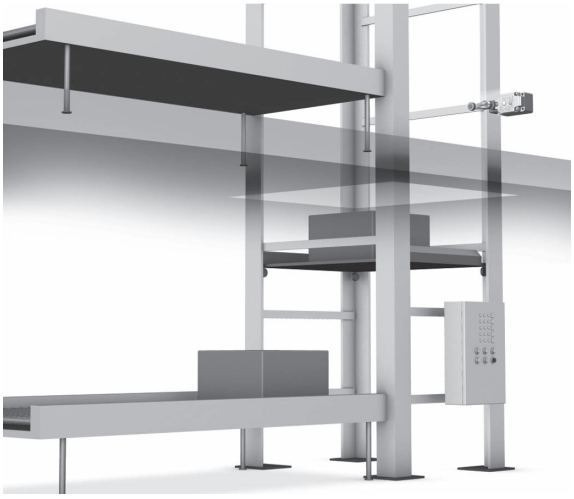

Model Number Structure

Model Number Legend (Not all combinations are possible. Contact your OMRON representative for details.)

General-purpose Switches

WL□ - □ □ □ □ -N
(1) (2) (3) (4) (5)

(1) Actuator and Property Specifications

Code	Lever	Pretravel (PT)
CA2	Roller lever: R38 mm	15±5°
CA2-7	Roller lever: R50 mm	
CA2-8	Roller lever: R63 mm	
CA12	Adjustable roller lever: R25 to 89 mm	
CL	Adjustable rod lever: 25 to 140 mm	
CAL4	Adjustable rod lever: 350 to 380 mm	
CAL5	Rod spring lever	
CA2-2	Roller lever: R38 mm	25±5°
CA12-2	Adjustable roller lever: R25 to 89 mm	
CL-2	Adjustable rod lever: 25 to 140 mm	
CA2-2N	Roller lever: R38 mm	MAX 20°
CA12-2N	Adjustable roller lever: R25 to 89 mm	
CL-2N	Adjustable rod lever: 25 to 140 mm	
G2	Roller lever, high sensitivity: R38 mm	10° $^{+2°}_{-1°}$
G12	Adjustable roller lever, high sensitivity: R25 to 89 mm	
GL	Adjustable rod lever, high sensitivity: 25 to 140 mm	
GCA2	Roller lever, high precision: R38 mm	5° $^{+2°}_{0°}$
CA32-41	Fork lever lock	50±5°
CA32-42	Fork lever lock	
CA32-43	Fork lever lock	
D18	Sealed top plunger	1.7 mm
D28	Sealed top-roller plunger	
D38	Sealed top-ball plunger	
SD	Horizontal plunger	2.8 mm
SD2	Horizontal-roller plunger	
SD3	Horizontal-ball plunger	
NJ	Flexible rod: Coil spring	20±10 mm
NJ-30	Flexible rod: Coil spring, multi-wire	
NJ-2	Flexible rod: Resin rod	40±20 mm
NJ-S2	Flexible rod: Steel wire	

(2) Built-in Switch Type

Code	Specification
Blank	Standard built-in switch
55	Airtight built-in switch

(3) Conduit Size, Ground Terminal Specifications

Code	Specifications	
	Conduit Size	Ground terminal
Blank	G1/2	None
G1	G1/2	Provided *
G	Pg13.5	
Y	M20	
TS	1/2-14NPT	

* Models with ground terminals are certified for EN/IEC (CE Marking).

(4) Indicator Type

Code	Specifications
Blank	No indicator
LE	Neon lamp: 125 to 250 VAC
LD	LED (10 to 115 VAC/DC)

(5) Lever Type

Code	Specifications
Blank	Standard lever (Allen-head bolt)
A	Double nut lever

Model Number Legend (Not all combinations are possible. Contact your OMRON representative for details.)

General-purpose Switches

Sensor I/O Connector Switches

WL□ - □ L D □ -N
(1) (2) (3) (4)

(1) Actuator and Property Specifications

Code	Lever	Pretravel (PT)
CA2	Roller lever: R38 mm	15±5°
G2	Roller lever, high sensitivity: R38 mm	$10^{\circ}{}^{+2^{\circ}}_{-1^{\circ}}$
GCA2	Roller lever, high precision: R38 mm	$5^{\circ}{}^{+2^{\circ}}_{0^{\circ}}$
D28	Sealed top-roller plunger	1.7 mm

(2) Built-in Switch Type

Code	Specification
Blank	Standard built-in switch
55	Airtight built-in switch

(3) Indicator Type

Code	Specifications
LD	LED (10 to 115 VAC/DC)

(4) Connector Type

Code	Specification				
	Shape		Voltage used *1	Wiring locations	Connector pin No. *2
K13A	Direct-wired connector	Threaded (M12)	AC	NO only	NO: ③ ④
K13			DC	NO only	NO: ③ ④
K43A			AC	NC+NO	NC: ① ②, NO: ③ ④
K43			DC	NC+NO	NC: ① ②, NO: ③ ④
-M1J	Pre-wired connector *3	Threaded (M12)	DC	NO only	NO: ③ ④
-M1GJ			DC	NO only	NO: ① ④
-M1JB			DC	NC only	NC: ② ③
-AGJ			AC	NC+NO	NC: ① ②, NO: ③ ④
-DGJ			DC	NC+NO	NC: ① ②, NO: ③ ④
-DK1EJ			DC	NO only	NC: ②, NO: ③ ④
-M1TJ		Smartclick	DC	NO only	NO: ③ ④
-M1TGJ			DC	NO only	NO: ① ④
-M1TJB			DC	NC only	NC: ② ③
-DTGJ			DC	NC+NO	NC: ① ②, NO: ③ ④
-DTK1EJ			DC	NO only	NC: ②, NO: ③ ④

***1.** DC models are certified for EN/IEC (CE Marking).
***2.** Refer to *Contact Forms* on page 16 for details on connector pin numbers.
***3.** The standard cable length is 0.3 m. Contact your OMRON representative for information on other cable lengths.

Model Number Legend (Not all combinations are possible. Contact your OMRON representative for details.)

Environment-resistant Switches

WL□-□□□□□□□□-N
(1) (2) (3) (4) (5) (6) (7) (8) (9)

(1) Actuator and Property Specifications

Code	Lever	Pretravel (PT)
CA2	Roller lever: R38 mm	15±5°
CA2-7	Roller lever: R50 mm	
CA2-8	Roller lever: R63 mm	
CA12	Adjustable roller lever: R25 to 89 mm	
CL	Adjustable rod lever: 25 to 140 mm	
CAL4	Adjustable rod lever: 350 to 380 mm	
CAL5	Rod spring lever	
CA2-2	Roller lever: R38 mm	25±5°
CA12-2	Adjustable roller lever: R25 to 89 mm	
CL-2	Adjustable rod lever: 25 to 140 mm	
CA2-2N	Roller lever: R38 mm	MAX 20°
CA12-2N	Adjustable roller lever: R25 to 89 mm	
CL-2N	Adjustable rod lever: 25 to 140 mm	
G2	Roller lever, high sensitivity: R38 mm	10° $^{+2°}_{-1°}$
G12	Adjustable roller lever, high sensitivity: R25 to 89 mm	
GL	Adjustable rod lever, high sensitivity: 25 to 140 mm	
GCA2	Roller lever, high precision: R38 mm	5° $^{+2°}_{0°}$
CA32-41	Fork lever lock	55°
CA32-42	Fork lever lock	
CA32-43	Fork lever lock	
D18	Sealed top plunger	1.7 mm
D28	Sealed top-roller plunger	
D38	Sealed top-ball plunger	
SD	Horizontal plunger	2.8 mm
SD2	Horizontal-roller plunger	
SD3	Horizontal-ball plunger	
NJ	Flexible rod: Coil spring	20±10 mm
NJ-30	Flexible rod: Coil spring, multi-wire	
NJ-2	Flexible rod: Resin rod	40±20 mm
NJ-S2	Flexible rod: Steel wire	

(2) Environment-resistant Model Specifications

Code	Specifications
Blank	Standard
RP	Corrosion-proof
P1	Weather-proof

(3) Built-in Switch Type

Code	Specifications
Blank	Standard built-in switch
55	Airtight built-in switch

(4) Temperature Specifications

Code	Specifications
Blank	Standard: −10°C to +80°C
TH	Heat-resistant: +5°C to +120°C *1
TC	Low-temperature: −40°C to +40°C *1

***1.** Cannot be combined with Corrosion-proof (RP) or Weather-proof (P1) Switches.

(5) Hermetic Specification

Code	Specifications
Blank	No cable molding.
139	Standard built-in switch. Cable is attached. Molded conduit opening and cover. (The cover cannot be removed.)
140	Airtight built-in switch. Cable is attached. Molded conduit opening, cover, and cover screws. (The cover cannot be removed.)
141	Airtight built-in switch. Cable is attached. Molded conduit opening, cover, head, cover screws, and head screws. (The cover cannot be removed and the head direction cannot be changed.) Double seal against oil including head cap countermeasure for cutting chips and an oil seal.
145	Airtight built-in switch. Cable is attached. Molded conduit opening, cover, and cover screws. (The cover cannot be removed. The head can be mounted in any of 4 directions.) Double seal against oil including head cap countermeasure for cutting chips and an oil seal.
RP40	Airtight built-in switch. Cable is attached. Molded conduit opening and cover. (The cover cannot be removed.) SC Connector can be removed, so it is possible to use flexible conduits for the cable.
RP60	Airtight built-in switch. Cables are attached. Molded conduit opening, cover, cover screws, and head screws. (The cover cannot be removed and the head direction cannot be changed.) Fluorine rubber is used for all rubber parts.

(6) Conduit Size, Ground Terminal Specifications

Code	Specifications	
	Conduit Size	Ground terminal
Blank	G1/2	None
G1	G1/2	Provided *2
G	Pg13.5	
Y	M20	
TS	1/2-14NPT	

***2.** Models with ground terminals are certified for EN/IEC (CE Marking).

(7) Indicator Type

Code	Specifications
Blank	No indicator
LE	Neon lamp: 125 to 250 VAC
LD	LED (10 to 115 VAC/DC)

***3.** Cannot be combined with Corrosion-proof (RP), Weather-proof (P1), Heat-resistant (TC), or Low-temperature (TC) Switches.

(8) Indicator Wiring Specification

Code	Specifications
2	NC connection: Light-ON when operating
3	NO connection: Light-ON when not operating

***4.** Always include the indicator wiring specification if you specify a (5) hermetic structure and an (7) indicator.

(9) Lever Type

Code	Specifications
Blank	Standard lever (Allen-head bolt)
A	Double nut lever

Model Number Legend (Not all combinations are possible. Contact your OMRON representative for details.)

Spatter-prevention Switches

WL□ - □□ S□ -N
(1) (2) (3) (4)

(1) Actuator and Property Specifications

Code	Lever	Pretravel (PT)
CA2	Roller lever: R38 mm	15±5°
G2	Roller lever, high sensitivity: R38 mm	$10^{\circ}{}^{+2^{\circ}}_{-1^{\circ}}$
GCA2	Roller lever, high precision: R38 mm	$5^{\circ}{}^{+2^{\circ}}_{0^{\circ}}$
D28	Sealed top-roller plunger	1.7 mm

(2) Built-in Switch Type

Code	Specifications
Blank	Standard built-in switch
55	Airtight built-in switch

(3) Indicator Type

Code	Specifications
LE	Neon lamp: 125 to 250 VAC *1
LD	LED (10 to 115 VAC/DC)

***1.** Cannot be combined with a Switch with a Connector.

(4) Connector Type

Code	Specifications				
	Shape		Voltage *2	Wiring locations	Connector pin No. *3
Blank	No connector	—	—	—	—
-M1J-1	Pre-wired Connector *4	Threaded (M12)	DC	NO only	NO: ③④
-M1GJ-1			DC	NO only	NO: ①④
-DGJS			DC	NC+NO	NC: ①②, NO: ③④
-DTGJS		Smartclick	DC	NC+NO	NC: ①②, NO: ③④

***2.** DC models are certified for EN/IEC (CE Marking).
***3.** Refer to *Contact Forms* on page 16 for details on connector pin numbers.
***4.** The standard cable length is 0.3 m. Contact your OMRON representative for information on other cable lengths.

Model Number Legend (Not all combinations are possible. Contact your OMRON representative for details.)

Long-life Switches

WLM□ - LD □ -N
(1) (2) (3)

(1) Actuator and Property Specifications

Code	Lever	Pretravel (PT)
CA2	Roller lever: R38 mm	15±5°
G2	Roller lever, high sensitivity: R38 mm	$10^{\circ}{}^{+2^{\circ}}_{-1^{\circ}}$
GCA2	Roller lever, high precision: R38 mm	$5^{\circ}{}^{+2^{\circ}}_{0^{\circ}}$

(2) Indicator Type

Code	Specifications
LD	LED (10 to 115 VAC/DC)

(3) Connector Type

Code	Specifications				
	Shape		Voltage	Wiring locations	Connector pin No.
Blank	Screw terminals: G1/2 conduit	—	—	—	—
K13A	Direct-wired connector	Threaded (M12)	AC	NO only	NO: ③ ④
K13			DC	NO only	NO: ③ ④
K43A			AC	NC+NO	NC: ① ②, NO: ③ ④
K43			DC	NC+NO	NC: ① ②, NO: ③ ④
-M1J	Pre-wired connector *1	Threaded (M12)	DC	NO only	NO: ③ ④
-AGJ			AC	NC+NO	NC: ① ②, NO: ③ ④
-DGJ			DC	NC+NO	NC: ① ②, NO: ③ ④
-M1TJ		Smartclick	DC	NO only	NO: ③ ④
-ATGJ			AC	NC+NO	NC: ① ②, NO: ③ ④
-DTGJ			DC	NC+NO	NC: ① ②, NO: ③ ④

***1.** The standard cable length is 0.3 m. Contact your OMRON representative for information on other cable lengths.

Ordering Information

General-purpose Switches

Standard Switches

Switches with Lever Actuators

	Actuator	Roller lever R38	Roller lever: R50	Roller lever: R63
Item	Pretravel (PT)	Model	Model	Model
Basic	15±5°	WLCA2-N	WLCA2-7-N	WLCA2-8-N
	25±5°	WLCA2-2-N	—	—
	MAX20°	WLCA2-2N-N	—	—
High-sensitivity	10° $^{+2°}_{-1°}$	WLG2-N	—	—
High-precision	5° $^{+2°}_{0°}$	WLGCA2-N	—	—

	Actuator	Adjustable roller lever	Adjustable rod lever: 25 to 140mm	Adjustable rod lever: 350 to 380mm	Rod spring lever
Item	Pretravel (PT)	Model	Model	Model	Model
Basic	15±5°	WLCA12-N	WLCL-N	WLCAL4-N	WLCAL5-N
	25±5°	WLCA12-2-N	WLCL-2-N	—	—
	MAX20°	WLCA12-2N-N	WLCL-2N-N	—	—
High-sensitivity	10° $^{+2°}_{-1°}$	WLG12-N	WLGL-N	—	—

	Actuator	Fork lever lock	Fork lever lock	Fork lever lock	Fork lever lock
Item	Movement until the lever reverses	Model	Model	Model	Model
Protective	50±5°	WLCA32-41-N	WLCA32-42-N	WLCA32-43-N	WLCA32-44-N

Switches with Plunger Actuators

	Actuator	Sealed top plunger	Sealed top-roller plunger	Sealed top-ball plunger
Item	Pretravel (PT)	Model	Model	Model
Basic	1.7 mm	WLD18-N	WLD28-N	WLD38-N

	Actuator	Horizontal plunger	Horizontal-roller plunger	Horizontal-ball plunger
Item	Pretravel (PT)	Model	Model	Model
Basic	2.8 mm	WLSD-N	WLSD2-N	WLSD3-N

Switches with Flexible Rod Actuators

	Actuator	Coil spring (spring diameter: 6.5)	Coil spring (spring diameter: 4.8)
Item	Pretravel (PT)	Model	Model
Basic	20±10 mm	WLNJ-N	WLNJ-30-N

	Actuator	Resin rod (rod diameter: 8)	Steel wire (wire diameter: 1)
Item	Pretravel (PT)	Model	Model
Basic	40±20 mm	WLNJ-2-N	WLNJ-S2-N

General-purpose Switches

Operation Indicator Switches

Switches with Lever Actuators

		Actuator	Roller lever: R38	Roller lever: R50	Roller lever: R63
Indicator	Item	Pretravel (PT)	Model	Model	Model
Neon lamp	Basic	15±5°	WLCA2-LE-N	WLCA2-7LE-N	WLCA2-8LE-N
		25±5°	WLCA2-2LE-N	—	—
		MAX20°	WLCA2-2NLE-N	—	—
	High-sensitivity	10° $^{+2°}_{-1°}$	WLG2-LE-N	—	—
	High-precision	5° $^{+2°}_{0°}$	WLGCA2-LE-N	—	—
LED	Basic	15±5°	WLCA2-LD-N	WLCA2-7LD-N	WLCA2-8LD-N
		25±5°	WLCA2-2LD-N	—	—
		MAX20°	WLCA2-2NLD-N	—	—
	High-sensitivity	10° $^{+2°}_{-1°}$	WLG2-LD-N	—	—
	High-precision	5° $^{+2°}_{0°}$	WLGCA2-LD-N	—	—

		Actuator	Adjustable roller lever:	Adjustable rod lever: 25 to 140mm	Adjustable rod lever: 350 to 380mm	Rod spring lever
Indicator	Item	Pretravel (PT)	Model	Model	Model	Model
Neon lamp	Basic	15±5°	WLCA12-LE-N	WLCL-LE-N	WLCAL4-LE-N	WLCAL5-LE-N
		25±5°	WLCA12-2LE-N	WLCL-2LE-N	—	—
		MAX20°	WLCA12-2NLE-N	WLCL-2NLE-N	—	—
	High-sensitivity	10° $^{+2°}_{-1°}$	WLG12-LE-N	WLGL-LE-N	—	—
LED	Basic	15±5°	WLCA12-LD-N	WLCL-LD-N	WLCAL4-LD-N	WLCAL5-LD-N
		25±5°	WLCA12-2LD-N	WLCL-2LD-N	—	—
		MAX20°	WLCA12-2NLD-N	WLCL-2NLD-N	—	—
	High-sensitivity	10° $^{+2°}_{-1°}$	WLG12-LD-N	WLGL-LD-N	—	—

		Actuator	Fork lever lock	Fork lever lock	Fork lever lock
Indicator	Item	Movement until the lever reverses	Model	Model	Model
Neon lamp	Basic	50±5°	WLCA32-41LE-N	WLCA32-42LE-N	WLCA32-43LE-N
LED	Basic	50±5°	WLCA32-41LD-N	—	WLCA32-43LD-N

Switches with Plunger Actuators

		Actuator	Sealed top plunger	Sealed top-roller plunger	Sealed top-ball plunger
Indicator	Item	Pretravel (PT)	Model	Model	Model
Neon lamp	Basic	1.7 mm	WLD18-LE-N	WLD28-LE-N	WLD38-LE-N
LED	Basic	1.7 mm	WLD18-LD-N	WLD28-LD-N	WLD38-LD-N

		Actuator	Horizontal plunger	Horizontal-roller plunger	Horizontal-ball plunger
Indicator	Item	Pretravel (PT)	Model	Model	Model
Neon lamp	Basic	2.8 mm	WLSD-LE-N	WLSD2-LE-N	WLSD3-LE-N
LED	Basic	2.8 mm	WLSD-LD-N	WLSD2-LD-N	WLSD3-LD-N

Switches with Flexible Rod Actuators

		Actuator	Coil spring (spring diameter: 6.5)	Coil spring (spring diameter: 4.8)
Indicator	Item	Pretravel (PT)	Model	Model
Neon lamp	Basic	20±10 mm	WLNJ-LE-N	WLNJ-30LE-N
LED	Basic	20±10 mm	WLNJ-LD-N	WLNJ-30LD-N

		Actuator	Resin rod (rod diameter: 8)	Steel wire (wire diameter: 1)
Indicator	Item	Pretravel (PT)	Model	Model
Neon lamp	Basic	40±20 mm	WLNJ-2LE-N	WLNJ-S2LE-N
LED	Basic	40±20 mm	WLNJ-2LD-N	WLNJ-S2LD-N

General-purpose Switches

Sensor I/O Connector Switches

Switches with Direct-wired Connectors

				Actuator	Roller lever: R38		
				Item	Basic	High-sensitivity	High-precision
Connector shape	Built-in switch type	Voltage	Wiring locations	Connector pin No.	Model	Model	Model
Threaded (M12)	General-purpose	AC	NO only	NO ③ ④	WLCA2-LDK13A-N	—	—
			NC + NO	NC ① ② NO ③ ④	WLCA2-LDK43A-N	—	—
		DC	NO only	NO ③ ④	WLCA2-LDK13-N	WLG2-LDK13-N	WLGCA2-LDK13-N
			NC + NO	NC ① ② NO ③ ④	WLCA2-LDK43-N	WLG2-LDK43-N	WLGCA2-LDK43-N
	Airtight	AC	NO only	NO ③ ④	WLCA2-55LDK13-N	WLG2-55LDK13-N	WLGCA2-55LDK13-N
			NC + NO	NC ① ② NO ③ ④	WLCA2-55LDK43-N	WLG2-55LDK43-N	WLGCA2-55LDK43-N

Switches with Pre-wired Connectors

				Actuator	Roller lever R38		
				Item	Basic	High-sensitivity	High-precision
Connector shape	Built-in switch type	Voltage	Wiring locations	Connector pin No.	Model	Model	Model
Threaded (M12)	General-purpose	DC	NO only	NO ③ ④	WLCA2-LD-M1J-N	WLG2-LD-M1J-N	WLGCA2-LD-M1J-N
				NO ① ④	WLCA2-LD-M1GJ-N	WLG2-LD-M1GJ-N	WLGCA2-LD-M1GJ-N
			NC only	NC ② ③	WLCA2-LD-M1JB-N	WLG2-LD-M1JB-N	—
			NC + NO	NC ① ② NO ③ ④	WLCA2-LD-DGJ-N	WLG2-LD-DGJ-N	WLGCA2-LD-DGJ-N
			NO only	NO ④ ③ NC ②	WLCA2-LD-DK1EJ-N	WLG2-LD-DK1EJ-N	—
	Airtight		NO only	NO ③ ④	WLCA2-55LD-M1J-N	—	WLGCA2-55LD-M1J-N
				NO ① ④	WLCA2-55LD-M1GJ-N	WLG2-55LD-M1GJ-N	WLGCA2-55LD-M1GJ-N
			NC only	NC ② ③	WLCA2-55LD-M1JB-N	WLG2-55LD-M1JB-N	WLGCA2-55LD-M1JB-N
			NC + NO	NC ① ② NO ③ ④	WLCA2-55LD-DGJ-N	WLG2-55LD-DGJ-N	WLGCA2-55LD-DGJ-N
			NO only	NO ④ ③ NC ②	WLCA2-55LD-DK1EJ-N	WLG2-55LD-DK1EJ-N	—
Smartclick	General-purpose		NO only	NO ③ ④	—	WLG2-LD-M1TJ-N	—
			NO only	NC ② ③	—	WLG2-LD-M1TJB-N	—

Note: The standard cable length for a pre-wired connector is 0.3 m. Contact your OMRON representative for information on other cable lengths.

Contact Forms

Screw Terminal Switches

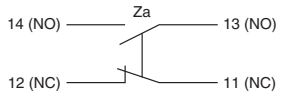

Screw Terminal Switches

Indicator-equipped (Light-ON when Not Operating) Switches *1

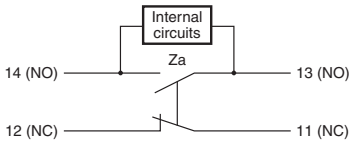

Direct-wired Connectors/Pre-wired Connectors

Indicator-equipped (Light-ON when Not Operating) Switches *1

AC

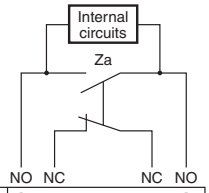

	NO	NC	NC	NO
WL□-□K13A-N	④	—	—	③
WL□-□K43A-N WL□-□-AGJ-N	④	①	②	③

①②③④ indicate the connector pin number.

DC

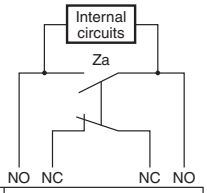

	NO	NC	NC	NO
WL□-□K13-N WL□-□-M1J-N WL□-□-M1TJ-N	④	—	—	③
WL□-□-M1GJ-N WL□-□-M1TGJ-N	④	—	—	①
WL□-□-M1JB-N WL□-□-M1TJB-N	—	③	②	—
WL□-□K43-N WL□-□DGJ-N WL□-□DTGJ-N	④	①	②	③

①②③④ indicate the connector pin number.

Connector Pin Layout Diagram

AC

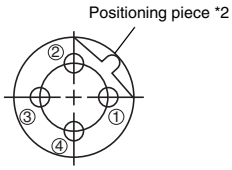

DC

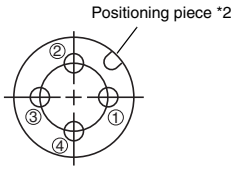

Note: Leakage current from indicator circuit may cause load malfunction (i.e., the load may remain ON). Make sure that the load operating current is higher than the leakage current. For countermeasures, refer to technical support on your OMRON website.

***1.** Light-ON when not operating means the indicator is lit when the actuator is free and is not light when the Switch contacts (NO) close when the actuator rotates or is pushed down.

***2.** The position of the positioning piece is not always the same. If using an L-shaped connector causes problems in application, use a straight connector.

Connecting Sensor I/O connector cable (Socket)

Type	AC/DC Type	Number of cable cores	Cable length L (m)	Model	Applicable limit switch models
M12 Screw (Straight) 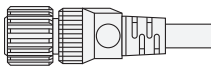	AC	2	2 m	**XS2F-A421-DB0-F**	**WL□-□K13A-N**
			5 m	**XS2F-A421-GB0-F**	
		4	2 m	**XS2F-A421-D90-F**	**WL□-□K43A-N** **WL□-□-AGJ-N**
			5 m	**XS2F-A421-G90-F**	
	DC	2	2 m	**XS2F-D421-DD0**	**WL□-□K13-N** **WL□-□-M1J-N**
			5 m	**XS2F-D421-GD0**	
			2 m	**XS2F-D421-DA0-F**	**WL□-□-M1GJ□-N**
			5 m	**XS2F-D421-GA0-F**	
		4	2 m	**XS2F-D421-D80-F**	**WL□-□K43-N** **WL□-□-M1JB-N** **WL□-□DGJ-N**
			5 m	**XS2F-D421-G80-F**	
M12 Smart click type (Straight) 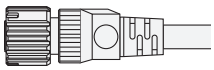	DC	4	2 m	**XS5F-D421-D80-F**	**WL□-□-M1TJ-N** **WL□-□-M1TJB-N**
			5 m	**XS5F-D421-G80-F**	

Dimensions (Unit: mm)

XS2F-□421-□□0-□
XS2F-D421-□D0

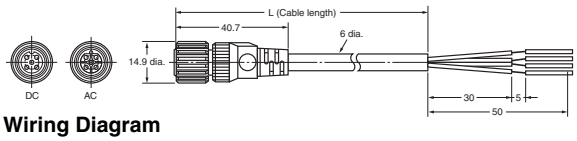

Wiring Diagram

AC/DC Type	Two-core model		Four-core model	
	Model	Wiring Diagram	Model	Wiring Diagram
AC	XS2F-A421-DB0-F XS2F-A421-GB0-F	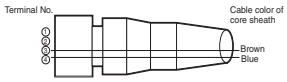	XS2F-A421-D90-F XS2F-A421-G90-F	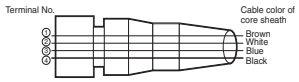
DC	XS2F-D421-DD0 XS2F-D421-GD0	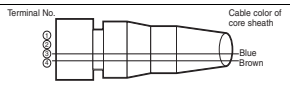	XS2F-D421-D80-F XS2F-D421-G80-F	
	XS2F-D421-DA0-F XS2F-D421-GA0-F	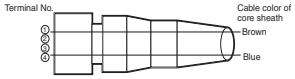		

XS5F-D421-□80-F

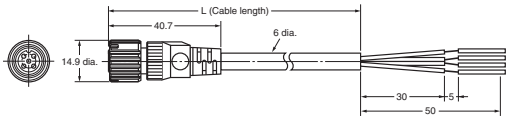

Wiring Diagram

AC/DC Type	Four-core model	
	Model	Wiring Diagram
DC	XS5F-D421-D80-F XS5F-D421-G80-F	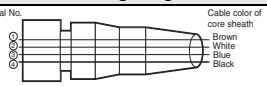

Environment-resistant Switches

Standard Switches

Item			Actuator / Pretravel (PT)	Roller lever R38 Model	Adjustable roller lever Model	Adjustable rod lever 25 to 140mm Model
Airtight seal		Basic	15±5°	WLCA2-55-N	WLCA12-55-N	WLCL-55-N
			25±5°	WLCA2-255-N	—	—
			MAX20°	WLCA2-2N55-N	—	—
		High-sensitivity	10° $^{+2°}_{-1°}$	WLG2-55-N	—	—
		High-precision	5° $^{+2°}_{0°}$	WLGCA2-55-N	—	—
Hermetic seal	Molded terminals, -139 models	Basic	15±5°	WLCA2-139-N	WLCA12-139-N	WLCL-139-N
			25±5°	WLCA2-2139-N	—	—
			MAX20°	WLCA2-2N139-N	—	—
		High-sensitivity	10° $^{+2°}_{-1°}$	WLG2-139-N	—	—
		High-precision	5° $^{+2°}_{0°}$	WLGCA2-139-N	—	—
	Molded terminals, -140 models	Basic	15±5°	WLCA2-140-N	WLCA12-140-N	WLCL-140-N
			25±5°	—	—	—
			MAX20°	WLCA2-2N140-N	—	—
		High-sensitivity	10° $^{+2°}_{-1°}$	WLG2-140-N	—	—
		High-precision	5° $^{+2°}_{0°}$	—	—	—
	Molded terminals, -141 models	Basic	15±5°	WLCA2-141-N	WLCA12-141-N	—
			25±5°	—	—	—
			MAX20°	—	—	—
		High-sensitivity	10° $^{+2°}_{-1°}$	WLG2-141-N	—	—
		High-precision	5° $^{+2°}_{0°}$	WLGCA2-141-N	—	—
	Anti-coolant	Basic	15±5°	WLCA2-RP60-N	WLCA12-RP60-N	WLCL-RP60-N
			25±5°	WLCA2-2RP60-N	—	—
			MAX20°	—	—	—
		High-sensitivity	10° $^{+2°}_{-1°}$	WLG2-RP60-N	—	—
		High-precision	5° $^{+2°}_{0°}$	WLGCA2-RP60-N	—	—
Heat-resistant		Basic	15±5°	WLCA2-TH-N	WLCA12-TH-N	WLCL-TH-N
			25±5°	WLCA2-2TH-N	WLCA12-2TH-N	WLCL-2TH-N
			MAX20°	WLCA2-2NTH-N	WLCA12-2NTH-N	WLCL-2NTH-N
		High-sensitivity	10° $^{+2°}_{-1°}$	WLG2-TH-N	WLG12-TH-N	WLGL-TH-N
		High-precision	5° $^{+2°}_{0°}$	WLGCA2-TH-N	—	—
Low-temperature		Basic	15±5°	WLCA2-TC-N	WLCA12-TC-N	WLCL-TC-N
			25±5°	WLCA2-2TC-N	WLCA12-2TC-N	WLCL-2TC-N
			MAX20°	WLCA2-2NTC-N	WLCA12-2NTC-N	WLCL-2NTC-N
		High-sensitivity	10° $^{+2°}_{-1°}$	WLG2-TC-N	WLG12-TC-N	WLGL-TC-N
		High-precision	5° $^{+2°}_{0°}$	WLGCA2-TC-N	—	—
Corrosion-proof		Basic	15±5°	WLCA2-RP-N	WLCA12-RP-N	WLCL-RP-N
			25±5°	—	—	—
			MAX20°	—	—	—
		High-sensitivity	10° $^{+2°}_{-1°}$	WLG2-RP-N	—	—
		High-precision	5° $^{+2°}_{0°}$	WLGCA2-RP-N	—	—
Weather-proof		Basic	15±5°	WLCA2-P1-N	WLCA12-P1-N	WLCL-P1-N
			25±5°	—		—
			MAX20°	—		—
		High-sensitivity	10° $^{+2°}_{-1°}$	WLG2-P1-N	WLG12-P1-N	WLGL-P1-N

Note: The maximum cable length for a Hermetic Switch is 5 m.

Actuator		Sealed top-roller plunger Model	Horizontal plunger Model	Horizontal-roller plunger Model	Coil spring (spring diameter: 6.5) Model	Resin rod (rod diameter: 8) Model
Airtight		WLD28-55-N	WLSD-55-N	WLSD2-55-N	WLNJ-55-N	WLNJ-255-N
Hermetic	Molded terminals, -139 models	WLD28-139-N	WLSD-139-N	WLSD2-139-N	WLNJ-139-N	WLNJ-2139-N
	Molded terminals, -140 models	WLD28-140-N	—	WLSD2-140-N	WLNJ-140-N	WLNJ-2140-N
	Anti-coolant	WLD28-RP60-N	WLSD-RP60-N	WLSD2-RP60-N	WLNJ-RP60-N	WLNJ-2RP60-N
Heat-resistant		WLD28-TH-N	WLSD-TH-N	WLSD2-TH-N	WLNJ-TH-N	—
Low-temperature		—	WLSD-TC-N	WLSD2-TC-N	WLNJ-TC-N	—
Corrosion-proof		WLD28-RP-N	WLSD-RP-N	WLSD2-RP-N	WLNJ-RP-N	WLNJ-2RP-N

Note: The maximum cable length for a Hermetic Switch is 5 m.

Environment-resistant Switches

Operation indicator Switches

Airtight Switches

		Actuator	Roller lever: R38	Adjustable roller lever	Adjustable rod lever: 25 to 140mm
Indicator	Item	Pretravel (PT)	Model	Model	Model
Neon lamp	Basic	15±5°	WLCA2-55LE-N	WLCA12-55LE-N	—
		25±5°	WLCA2-255LE-N	—	—
		MAX20°	WLCA2-2N55LE-N	—	—
	High-sensitivity	10° $^{+2°}_{-1°}$	WLG2-55LE-N	—	—
	High-precision	5° $^{+2°}_{0°}$	WLGCA2-55LE-N	—	—
LED	Basic	15±5°	WLCA2-55LD-N	WLCA12-55LD-N	WLCL-55LD-N
		25±5°	WLCA2-255LD-N	—	—
		MAX20°	WLCA2-2N55LD-N	—	—
	High-sensitivity	10° $^{+2°}_{-1°}$	WLG2-55LD-N	—	—
	High-precision	5° $^{+2°}_{0°}$	WLGCA2-55LD-N	—	—

Actuator		Sealed top-roller plunger	Horizontal plunger	Horizontal-roller plunger	Coil spring (spring diameter: 6.5)	Resin rod (rod diameter: 8)
Indicator	Item	Model	Model	Model	Model	Model
Neon lamp	Basic	WLD28-55LE-N	—	—	—	—
LED	Basic	WLD28-55LD-N	WLSD-55LD-N	WLSD2-55LD-N	WLNJ-55LD-N	WLNJ-255LD-N

Hermetic Switches

		Actuator	Roller lever: R38	
		Wiring specification	NC wiring	NO wiring
Item		Pretravel (PT)	Model	Model
Molded terminals, -139 models	Basic	15±5°	WLCA2-139LD2-N	WLCA2-139LD3-N
		25±5°	WLCA2-2139LD2-N	WLCA2-2139LD3-N
		MAX20°	—	—
	High-sensitivity	10° $^{+2°}_{-1°}$	—	WLG2-139LD3-N
	High-precision	5° $^{+2°}_{0°}$	WLGCA2-139LD2-N	WLGCA2-139LD3-N
Molded terminals, -141 models	Basic	15±5°	WLCA2-141LD2-N	WLCA2-141LD3-N
		25±5°	—	—
		MAX20°	—	—
	High-sensitivity	10° $^{+2°}_{-1°}$	WLG2-141LD2-N	WLG2-141LD3-N
	High-precision	5° $^{+2°}_{0°}$	—	—
Anti-coolant	Basic	15±5°	WLCA2-RP60LD2-N	WLCA2-RP60LD3-N
		25±5°	WLCA2-2RP60LD2-N	WLCA2-2RP60LD3-N
		MAX20°	—	—
	High-sensitivity	10° $^{+2°}_{-1°}$	WLG2-RP60LD2-N	WLG2-RP60LD3-N
	High-precision	5° $^{+2°}_{0°}$	WLGCA2-RP60LD2-N	WLGCA2-RP60LD3-N

Note: The maximum cable length for a Hermetic Switch is 5 m.

Spatter-prevention Switches

		Actuator	Roller lever: R38		Sealed top-roller plunger
			Double Nut Lever	Allen-head Lever	
Indicator	Item	Pretravel (PT)	Model	Model	Model
Neon lamp	Basic	15±5°	WLCA2-LEAS-N	WLCA2-LES-N	WLD28-LES-N
	High-sensitivity	10° +2° -1°	WLG2-LEAS-N	WLG2-LES-N	—
	High-precision	5° +2° 0°	—	WLGCA2-LES-N	—
LED	Basic	15±5°	WLCA2-LDAS-N	WLCA2-LDS-N	WLD28-LDS-N
	High-sensitivity	10° +2° -1°	WLG2-LDAS-N	WLG2-LDS-N	—
	High-precision	5° +2° 0°	—	WLGCA2-LDS-N	—

Long-life Switches

Actuator		Item	Operation indicator (LED) *1		
			Basic 15±5°	High-sensitivity 10° +2° -1°	High-precision 5° +2° 0°
			Model	Model	Model
Roller lever: R38, screw terminals			WLMCA2-LD-N	WLMG2-LD-N	WLMGCA2-LD-N
Roller lever, direct-wired connector	2 conductors	AC	WLMCA2-LDK13A-N	WLMG2-LDK13A-N	WLMGCA2-LDK13A-N
		DC	WLMCA2-LDK13-N	WLMG2-LDK13-N	WLMGCA2-LDK13-N
	4 conductors	AC	WLMCA2-LDK43A-N	WLMG2-LDK43A-N	—
		DC	WLMCA2-LDK43-N	WLMG2-LDK43-N	WLMGCA2-LDK43-N
Roller lever, pre-wired connector *2	2 conductors	DC	WLMCA2-LD-M1J-N	WLMG2-LD-M1J-N	WLMGCA2-LD-M1J-N
	4 conductors	DC	WLMCA2-LD-DGJ-N	WLMG2-LD-DGJ-N	—

***1.** The default setting is light-ON when not operating (NO wiring).
Turn the lamp holder by 180° to change the setting to light-ON when operating (NC wiring).
(Ask your OMRON representative for information on 2-conductor models.)

***2.** With 0.3-m cable.

Individual Parts

Switches without Levers, Heads, and Actuators

General-purpose Parts

Actuator	Item	Pretravel (PT)	Set	Switch without levers	Head *1 (with Actuators)	Actuator only *2
				Model	Model	Model
Roller lever	Basic	15±5°	WLCA2-N	WLRCA2-N	WL-1H1100-N	WL-1A100
		25±5°	WLCA2-2-N	WLRCA2-2-N	WL-3H1100-N	
		MAX20°	WLCA2-2N-N	WLRCA2-2N-N	WL-1H1100-N	
	High-sensitivity	10° $^{+2°}_{-1°}$	WLG2-N	WLRG2-N	WL-2H1100-N	
Adjustable roller lever	Basic	15±5°	WLCA12-N	WLRCA2-N	WL-1H2100-N	WL-2A100
		25±5°	WLCA12-2-N	WLRCA2-2-N	WL-3H2100-N	
		MAX20°	WLCA12-2N-N	WLRCA2-2N-N	WL-1H2100-N	
	High-sensitivity	10° $^{+2°}_{-1°}$	WLG12-N	WLRG2-N	WL-2H2100-N	
Variable rod lever	Basic	15±5°	WLCL-N	WLRCA2-N	WL-1H4100-N	WL-4A100
		25±5°	WLCL-2-N	WLRCA2-2-N	WL-3H4100-N	
		MAX20°	WLCL-2N-N	WLRCA2-2N-N	WL-1H4100-N	
	High-sensitivity	10° $^{+2°}_{-1°}$	WLGL-N	WLRG2-N	WL-2H4100-N	
Fork lever lock	Basic	MAX55°	WLCA32-41-N	WLRCA32-N	WL-5H5100-N	WL-5A100
			WLCA32-42-N		WL-5H5102-N	WL-5A102
			WLCA32-43-N		WL-5H5104-N	WL-5A104
			WLCA32-44-N		WL-5H5104-N	WL-5A104
Top plunger	Basic	MAX 1.7 mm	WLD18-N	—	WL-7H100-N	—
			WLD28-N		WL-7H400-N	—
			WLD38-N		WL-7H300-N	—
Horizontal plunger	Basic	MAX 2.8 mm	WLSD-N	—	WL-8H100-N	—
			WLSD2-N		WL-8H200-N	—
			WLSD3-N		WL-8H300-N	—
Flexible rod	Basic	20±10 mm	WLNJ-N	—	WL-9H100-N	—
			WLNJ-30-N		WL-9H200-N	—
		40±20 mm	WLNJ-2-N		WL-9H300-N	—
			WLNJ-S2-N		WL-9H400-N	—

***1.** The heads are not compatible with WL-series Switches.
***2.** The same Actuators can be used for both WL and WL-N Switches.

Spatter-prevention Parts

Actuator	Lever Type	Item	Set	Switch without levers	Head *1 (with Actuators)	Actuator only *2
				Model	Model	Model
Roller lever	Allen-head bolt lever	Basic	WLCA2-LES-N	WLRCA2-LES-N	WL-1H1100S-N	WL-1A103S
			WLCA2-LDS-N	WLRCA2-LDS-N		
		High-sensitivity	WLG2-LDS-N	WLRG2-LDS-N		
	Double nut lever	Basic	WLCA2-LEAS-N	WLRCA2-LES-N	WL-2H1100S-N	WL-1A105S
			WLCA2-LDAS-N	WLRCA2-LDS-N		
		High-sensitivity	WLG2-LDAS-N	WLRG2-LDS-N		

***1.** The heads are not compatible with WL-series Switches.
***2.** The same Actuators can be used for both WL and WL-N Switches.

Covers with Indicators (See Note.)

General-purpose Parts

Cover / Item	Cover only * Model
Neon lamp	WL-LE-N
LED	WL-LD-N

* The Covers are not compatible with WL-series Switches.

Spatter-prevention Parts

Cover / Item	Cover only * Model
Neon lamp	WL-LES-N
LED	WL-LDS-N

Note: The default setting is for light-ON when not operating.
Turn the lamp holder by 180° to change the setting to light-ON when operating.

Specifications

General-purpose/ Environment-resistant Switches

Ratings

Screw Terminals

Item	Rated voltage (V)		Non-inductive load (A)				Inductive load (A)			
			Resistive load		Lamp load		Inductive load		Motor load	
			NC	NO	NC	NO	NC	NO	NC	NO
Basic or high-precision	AC	125	10		3	1.5	10		5	2.5
		250	10		2	1	10		3	1.5
		500	10		1.5	0.8	3		1.5	0.8
	DC	8	10		6	3	10		6	
		14	10		6	3	10		6	
		30	6		4	3	6		4	
		125	0.8		0.2	0.2	0.8		0.2	
		250	0.4		0.1	0.1	0.4		0.1	
High-sensitivity Switches	AC	125	5		—		—		—	
		250	5							
	DC	125	0.4		—		—		—	
		250	0.2							

Note: 1. The above figures are for steady-state currents.
2. Inductive loads have a power factor of 0.4 min. (AC) and a time constant of 7 ms max. (DC).
3. A lamp load has an inrush current of 10 times the steady-state current.
4. A motor load has an inrush current of 6 times the steady-state current.
5. For PC loads, use the microload models.

Inrush current	**NC**	30 A max.(15 A max. *)
	NO	20 A max.(10 A max. *)

* For high-sensitivity switches.

Minimum applicable load	5 VDC 1 mA, resistive load, P level

Operation indicator Switches

Model	Item	Max. rated voltage	Leakage current (mA)
WL-LE-N	Neon lamp	125 AC	Approx. 0.6
		250 AC	Approx. 1.9
WL-LD-N	LED	10 to 24 VAC/DC	Approx. 0.4
		115 VAC/DC	Approx. 0.5

Characteristics

Degree of protection		IP67
Durability *1	**Mechanical**	15,000,000 operations min. *2
	Electrical	750,000 operations min. *3
Operating speed		1 mm/s to 1 m/s (in case of WLCA2-N)
Operating frequency	**Mechanical**	120 operations/minute min.
	Electrical	30 operations/minute min.
Rated frequency		50/60 Hz
Insulation resistance		100 MΩ min. (at 500 VDC)
Contact resistance		25 mΩ max. (initial value for the built-in switch when tested alone)
Dielectric strength	**Between terminals of the same polarity**	1,000 VAC (600 VAC), 50/60 Hz for 1 min
	Between currentcarrying metal part and ground	2,200 VAC (1,500 VAC), 50/60 Hz for 1 min *4
	Between each terminal and non-currentcarrying metal part	2,200 VAC (1,500 VAC), 50/60 Hz for 1 min *4
Vibration resistance	**Malfunction**	10 to 55 Hz, 1.5-mm double amplitude *5
Shock resistance	**Destruction**	1,000 m/s^2 max.
	Malfunction	300 m/s^2 *5
Ambient operating temperature		-10 to +80°C (with no icing) *6
Ambient operating humidity		35% to 95% RH
Weight		Approx. 255 g (in case of WLCA2-N)

Note: 1. The above figures are initial values.
2. The figures in parentheses for dielectric strength are those for the highsensitivity switches models.

***1.** The values are calculated at an operating temperature of +5°C to +35°C and an operating humidity of 40% to 70% RH. Contact your OMRON sales representative for more detailed information on other operating environments.
***2.** High-sensitivity Switches and Switches with Flexible Rod Actuators: 10 million operations min.
500,000 operations min. for weather-proof models.
***3.** Durability is 500,000 operations min. for high-sensitivity models.
500,000 operations min. for weather-proof models.
Contact your OMRON representative for information on Environment-resistant Switches.
***4.** Switches with Connectors: 1,500 V.
***5.** Except Switches with Flexible Rod Actuators.
***6.** For low-temperature models this is -40°C to +40°C (with no icing). For heatresistant models the range is +5°C to +120°C.

Spatter-prevention Switches

Ratings

Screw Terminals

Item	Rated voltage (V)		Non-inductive load (A)				Inductive load (A)			
			Resistive load		Lamp load		Inductive load		Motor load	
			NC	NO	NC	NO	NC	NO	NC	NO
WL□-LES-N (Without high-sensitivity overtravel models)	AC	125	10		3	1.5	10		5	2.5
		250	10		2	1	10		3	1.5
WL□-LDS-N (Without high-sensitivity overtravel models)	AC	115	10		3	1.5	10		5	2.5
	DC	12	10		6	3	10		6	
		24	6		4	3	6		4	
		115	0.8		0.2	0.2	0.8		0.2	

Note: 1. The above figures are for steady-state currents.
2. Inductive loads have a power factor of 0.4 min. (AC) and a time constant of 7 ms max. (DC).
3. A lamp load has an inrush current of 10 times the steady-state current.
4. A motor load has an inrush current of 6 times the steady-state current.

* Refer to the rating of a General-purpose / Weather-proof Switches type for the rating of a high-sensitivity overtravel type.

Inrush current	**NC**	30 A max.(15 A max. *)
	NO	20 A max.(10 A max. *)

* For high-sensitivity switches.

Minimum applicable load	5 VDC 1 mA, resistive load, P level

Characteristics

Degree of protection		IP67
Durability *1	**Mechanical**	15,000,000 operations min. *2
	Electrical	750,000 operations min. (3 A at 250 VAC, resistive load) *3
Operating speed		1 mm/s to 1 m/s (in case of WLCA2-LDS-N)
Operating frequency	**Mechanical**	120 operations/minute min.
	Electrical	30 operations/minute min.
Rated frequency		50/60 Hz
Insulation resistance		100 MΩ min. (at 500 VDC)
Contact resistance		25 mΩ max. (initial value for the built-in switch when tested alone)
Dielectric strength	**Between terminals of the same polarity**	1,000 VAC (600 VAC), 50/60 Hz for 1 min
	Between currentcarrying metal part and ground	2,200 VAC (1,500 VAC), 50/60 Hz for 1 min *4
	Between each terminal and non-currentcarrying metal part	2,200 VAC (1,500 VAC), 50/60 Hz for 1 min *4
Vibration resistance	**Malfunction**	10 to 55 Hz, 1.5-mm double amplitude
Shock resistance	**Destruction**	1,000 m/s^2 max.
	Malfunction	300 m/s^2
Ambient operating temperature		-10 to +80°C (with no icing)
Ambient operating humidity		35% to 95% RH
Weight		Approx. 255 g (in case of WLCA2-LDS-N)

Note: 1. The above figures are initial values.
2. The figures in parentheses for dielectric strength are those for the highsensitivity overtravel models.

***1.** The values are calculated at an operating temperature of +5°C to +35°C and an operating humidity of 40% to 70% RH. Contact your OMRON sales representative for more detailed information on other operating environments.
***2.** Durability is 10,000,000 operations min. for high-sensitivity models.
***3.** Durability is 500,000 operations min. for high-sensitivity models.
500,000 operations min. for weather-proof models.
Contact your OMRON representative for information on Airtight Switches.
***4.** Switches with Connectors: 1,500 V.

Long-life Switches

Ratings

Screw Terminal Switches

Item	Rated voltage (V)	Non-inductive load (A)				Inductive load (A)			
		Resistive load		Lamp load		Inductive load		Motor load	
		NC	NO	NC	NO	NC	NO	NC	NO
Basic or high-precision	115 AC	10		3	1.5	10		5	2.5
	12 DC 24 DC 115 DC	10 6 0.8		6 4 0.2	3 3 0.2	10 6 0.8		6 4 0.2	
High-sensitivity	115 AC	5		—		—		—	
	115 DC	0.4		—		—		—	

Inrush current	NC	30 A max. (15 A max. *)
	NO	20 A max. (10 A max. *)

* For high-sensitivity overtravel models.

Minimum applicable load	5 VDC 1 mA, resistive load, P level

Direct-wired Connector and Pre-wired Connector Switches

Model	Rated voltage (V)	Non-inductive load (A)				Inductive load (A)			
		Resistive load		Lamp load		Inductive load		Motor load	
		NC	NO	NC	NO	NC	NO	NC	NO
Basic or high-precision	115 AC	3		3	1.5	3		3	2.5
	12 DC 24 DC 115 DC	3 3 0.8		3 3 0.2		3 3 0.8		3 3 0.2	
High-sensitivity	115 AC	3		—		—		—	
	115 DC	0.4		—		—		—	

Note: 1. The above figures are for steady-state currents.
2. Inductive loads have a power factor of 0.4 min. (AC) and a time constant of 7 ms max. (DC).
3. A lamp load has an inrush current of 10 times the steady-state current.
4. A motor load has an inrush current of 6 times the steady-state current.

Characteristics

Degree of protection		IP67
Durability *1	Mechanical	30,000,000 operations min.
	Electrical	30,000,000 operations min. (10 mA at 24 VDC, resistive load) 750,000 operations min. (3 A at 115 VAC, resistive load) High-sensitivity Switches: 500,000 operations min. (3 A at 115 VAC, resistive load)
Operating speed		1 mm/s to 1 m/s (for WLMCA2-LD-N)
Operating frequency	Mechanical	120 operations/minute
	Electrical	30 operations/minute
Rated frequency		50/60 Hz
Insulation resistance		100 MΩ min. (at 500 VDC)
Contact resistance		25 mΩ max. (initial value for the built-in switch when tested alone)
Dielectric strength (50/60 Hz for 1 min)	Between terminals of the same polarity	1,000 VAC (600 VAC), 50/60 Hz for 1 min
	Between current-carrying metal part and ground	2,200 VAC (1,500 VAC), 50/60 Hz for 1 min *2
	Between each terminal and non-current-carrying metal part	2,200 VAC (1,500 VAC), 50/60 Hz for 1 min *2
Vibration resistance	Malfunction	10 to 55 Hz, 1.5-mm double amplitude
Shock resistance	Destruction	1,000 m/s^2 max.
	Malfunction	300 m/s^2 max.
Ambient operating temperature		–10°C to +80°C (with no icing)
Ambient operating humidity		35% to 95%RH
Weight		Approx. 255 g (for WLMCA2-LD-N)

Note: 1. The above figures are initial values.
2. The figures in parentheses for dielectric strength are for the High-sensitivity Switches.

***1.** The values are calculated at an operating temperature of +5°C to +35°C, and an operating humidity of 40% to 70%RH. Contact your OMRON sales representative for more detailed information on other operating environments.
***2.** Switches with Connectors: 1,500 V.

General-purpose/ Environment-resistant/ Spatter-prevention Switches

Approved Standards

Agency	Standard	File No.	Approved models
UL	UL508	Contact your OMRON representative for information	Contact your OMRON representative for information
	CSA C22.2 No.14		
TÜV Rheinland	EN60947-5-1		
CCC (CQC)	GB14048.5		

Approved Standard Ratings

UL/cUL (UL508, CSA C22.2 No.14)

Specifications			Approved Standards
Indicator	Sensor I/O connectors	Item	
No indicator	No Connector	Basic Switches	A600 1 A, 125 VDC
		High-sensitivity or high-precision	B600 0.5 A, 125 VDC
	Pre-wired Connector (AC)	Basic, high-sensitivity, or high-precision	C300 3 A, 250 VAC
	Pre-wired Connector (DC) Direct-wired Connector (DC)	Basic Switches	1 A, 125 VDC
		High-sensitivity or high-precision	0.5 A, 125 VDC
Neon lamp	No Connector	Basic Switches	A300 10 A, 250 VAC
		High-sensitivity or high-precision	B300 5 A, 250 VAC
	Pre-wired Connector (AC)	Basic, high-sensitivity, or high-precision	C300 3 A, 250 VAC
LED	No Connector	Basic Switches	A150 10 A, 115 VAC 1 A, 115 VDC
		High-sensitivity or high-precision	B150 5 A, 115 VAC 0.5 A, 115 VDC
	Pre-wired Connector (AC)	Basic, high-sensitivity, or high-precision	C150 3 A, 115 VAC
	Pre-wired Connector (DC) Direct-wired Connector (DC)	Basic Switches	1 A, 115 VDC
		High-sensitivity or high-precision	0.5 A, 115 VDC

A600 Authentication conditions

Rated voltage	Energizing current	Current (A)		Volt-ampere (VA)	
		Make	Break	Make	Break
120 VAC 240 VAC 480 VAC 600 VAC	10 A	60 30 15 12	6 3 1.5 1.2	7,200	720

B600 Authentication conditions

Rated voltage	Energizing current	Current (A)		Volt-ampere (VA)	
		Make	Break	Make	Break
120 VAC 240 VAC 480 VAC 600 VAC	5 A	30 15 7.5 6	3 1.5 0.75 0.6	3,600	360

C300 Authentication conditions

Rated voltage	Energizing current	Current (A)		Volt-ampere (VA)	
		Make	Break	Make	Break
120 VAC 240 VAC	2.5 A	15 7.5	1.5 0.75	1,800	180

A300 Authentication conditions

Rated voltage	Energizing current	Current (A)		Volt-ampere (VA)	
		Make	Break	Make	Break
120 VAC 240 VAC	10 A	60 30	6 3	7,200	720

B300 Authentication conditions

Rated voltage	Energizing current	Current (A)		Volt-ampere (VA)	
		Make	Break	Make	Break
120 VAC 240 VAC	5 A	30 15	3 1.5	3,600	360

A150 Authentication conditions

Rated voltage	Energizing current	Current (A)		Volt-ampere (VA)	
		Make	Break	Make	Break
120 VAC	10 A	60	6	7,200	720

B150 Authentication conditions

Rated voltage	Energizing current	Current (A)		Volt-ampere (VA)	
		Make	Break	Make	Break
120 VAC	5 A	30	3	3,600	360

C150 Authentication conditions

Rated voltage	Energizing current	Current (A)		Volt-ampere (VA)	
		Make	Break	Make	Break
120 VAC	2.5 A	15	1.5	1,800	180

TÜV (EN 60947-5-1)

(Certification Only for Switches with Ground Terminals and DC Switches with Connectors)

Authentication conditions	Specification					
	With ground terminals					With DC Connector
	No indicator		Neon lamp	LED		
Working load category	AC-15	DC-12	AC-15	AC-15	DC-12	DC-12
Rated working voltage (Ue)	250 V	48 V	250 V	115 V	48 V	48 V
Rated working current (Ie)	2 A					
Conditional short-circuit current	100 A					
Short-circuit protective device (SCPD)	10 A, fuse type gG					
Rated insulation voltage (Ui)	250 V					48 V
Rated impulse dielectric strength (Uimp)	4 kV					800 V
Pollution degree	3					
Electric shock protection class	Class I					Class III

CCC (GB14048.5)

Authentication conditions	Specification						
	No indicator		Neon lamp	LED		With DC Connector	With AC Connector
Working load category	AC-15	DC-13	AC-15	AC-15	DC-13	DC-13	AC-15
Rated working voltage (Ue)	250 V	48 V	250 V	250 V	48 V	48 V	250 V
Rated working current (Ie)	2 A						
Conditional short-circuit current	1000 A						
Short-circuit protective device (SCPD)	10 A, fuse type gG						
Rated insulation voltage (Ui)	250 V						

Structure and Nomenclature

Structure

General-purpose Switches: WLCA2-N

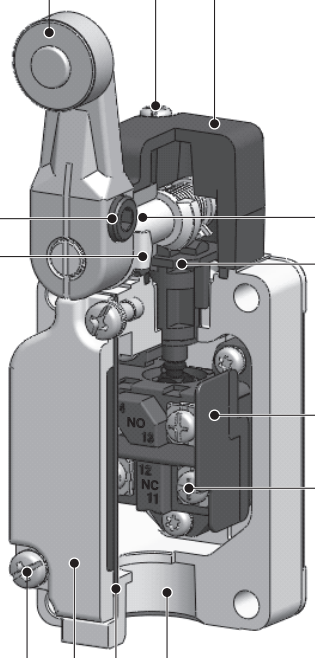

Actuator

Roller
The roller is made of self-lubricating sintered stainless steel and boasts high resistance to wear.

Lever
The lever is forged from corrosion-resistant aluminum alloy. It provides superior corrosion resistance and outstanding strength.
With roller lever, adjustable rod and flexible rod models, the actuator position can be set anywhere within 360°. (The lever cannot be mounted in the opposite direction.)

Roller Lever Bolt

Set Position Marker Plate
Set the indicator needle so that it is between protrusions on the bearing section on the marker plate after operation.

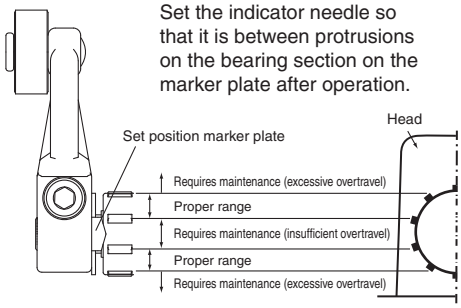

Cover Setscrew
A combination Philips-slotted screw is used.
A retainer prevents the screw from falling from the cover even when the screw is loose.

Cover

Cover Seal
High sealing performance is achieved. The seal also serves as a spacer.
There is no troublesome insulating paper, making it easy to work with the Switch.

Head-mounting Screws

Head
You can remove the two screws to mount the switch in any of the four possible orientations.

Shaft Section Seal
An oil seal is fitted on the inlet of the shaft section to maintain a tight seal.

Operational Plunger
You can change the direction of the operational plunger to electrically switch the direction of operation between both sides, left only, or right only.

Built-in Switch
Built-in switch with SPST-NO+NC contact form.

Terminal Screws
Four, M3.5 screws

Conduit Opening *1
The conduit screw is a parallel screw for G1/2 piping, and is used together with an SC connector to maintain a tight seal.

***1.** The available conduit screws are Pg 13.5, M20 and 1/2-14 NPT.

Indicators

Indicator Covers

The indicator covered if outsert molded from diecast aluminum and has outstanding sealing properties.

Indicator Windows

Operating status (i.e., light-ON when operating or light-ON when not operating) depends on whether a neon lamp or an LED is used.

Light-ON when Operating/Not Operating

Indicators can be switched from light-ON when operating and light-ON when not operating, by simply rotating the indicator holder by 180°.

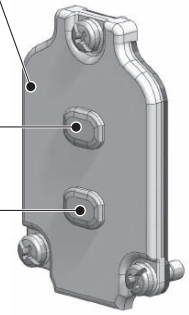

Lamp Holder

Indicator

The indicator is either a neon lamp or an LED. Switches with LED indicators have a built-in rectifier stack, so there is no connection polarity.

Contact Spring

Use the terminal screws on the built-in switch to connect to the lamp terminals. A coil spring is used to make contact, so connecting to the lamp terminals is not necessary.

Light-ON when Operating

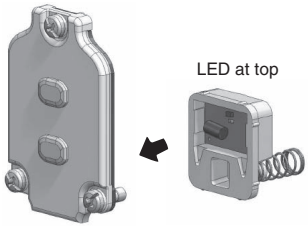

Light-ON when Not Operating

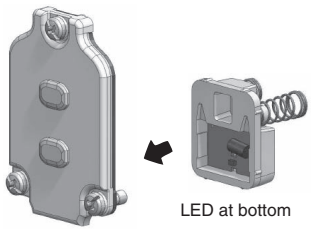

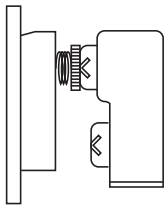

Light-ON when Not Operating

Operation

WL-LE-N WL-LD-N	**Light-ON when operating *1**	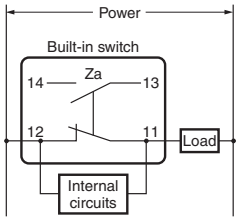
	Light-ON when not operating *2	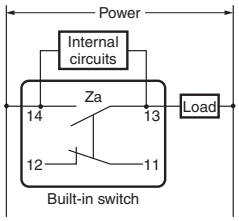

Internal Circuits

WL-LE-N	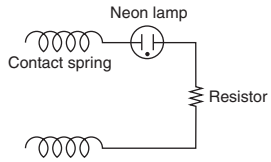
WL-LD-N	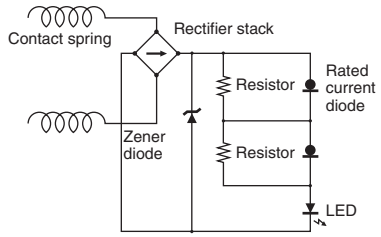

Note: 1. Leakage current from indicator circuit may cause load malfunction (i.e., the load may remain ON). Make sure that the load operating current is higher than the leakage current.
For countermeasures, refer to technical support on your OMRON website.

***1.** Light-ON when operating means that the lamp lights when the Limit Switch contacts (NC) release, or when the actuator rotates or is pushed down.

***2.** Light-ON when not operating means the lamp remains lit when the actuator is free, or when the Limit Switch contacts (NO) close when the actuator rotates or is pushed down.

Environment-resistant Switches

Molding Specifications for Hermetic Switches **: Molded parts**

WL□-139-N

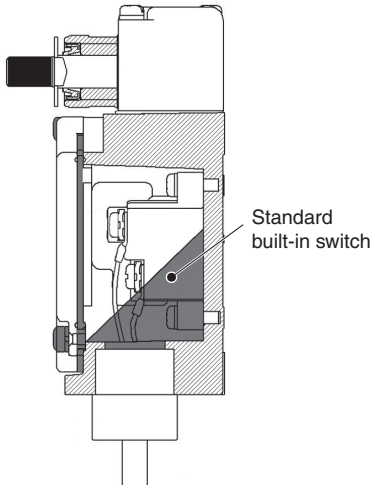

WL□-140-N

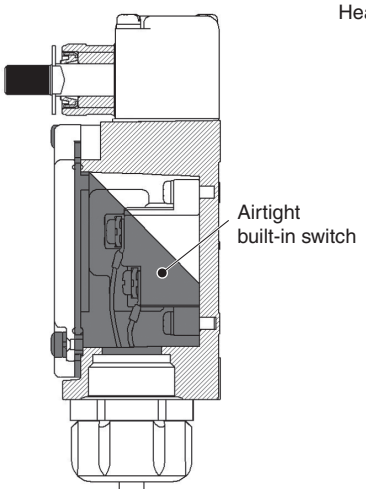

WL□-141-N

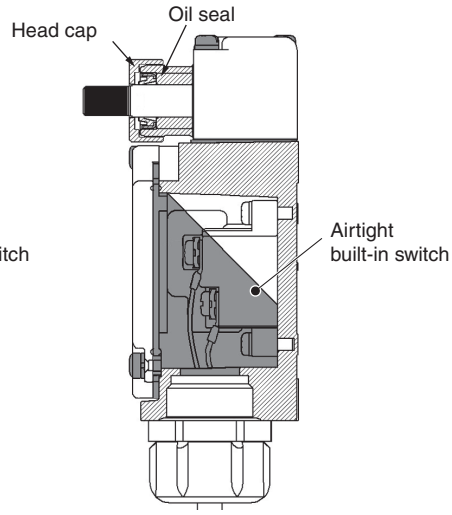

WL□-145-N

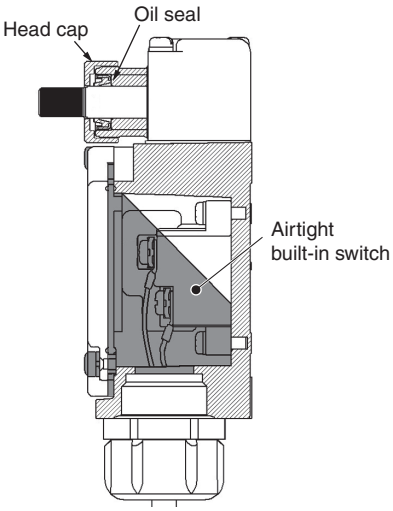

WL□-RP40-N

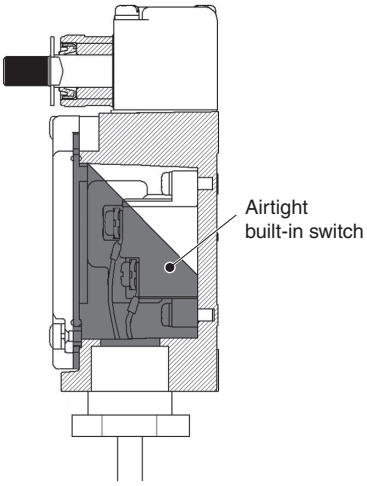

WL□-RP60-N

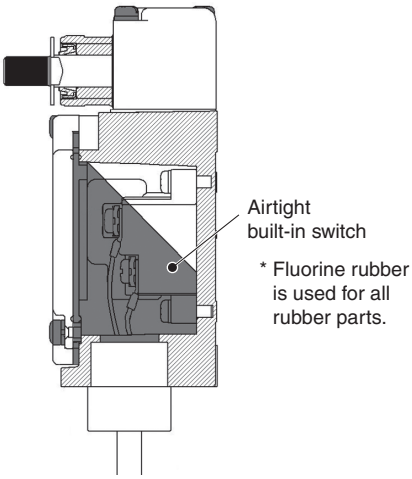

Model	Cable specifications	Connector type
WL□-139-N	Standard 5-m VCT cable, with high flexibility and good anti-oil properties attached. Finished outer diameter: 11.5 mm, 4 conductors.	Resin cap
WL□-140-N WL□-141-N WL□-145-N		Metal connector
WL□-RP40-N		Resin connector *
WL□-RP60-N		Resin cap

* The connector can be removed, so it is possible to use flexible conduit for the cable.

Spatter-prevention Switches: WLCA2-LES-N

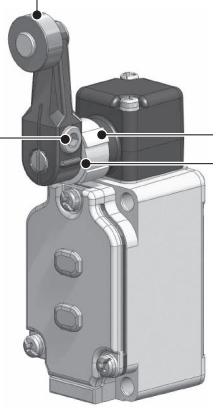

Actuator

Roller, Roller Axis
Using stainless steel prevents spatter from adhering.

Operating Lever
A baking finish is applied to the surface so that any adhering spatter is easily removed.

Roller Lever Bolt
Stainless steel construction to prevent spatter adherence.
Double nut models are also available.

Screws
Externally visible screws on the head and cover are made of stainless steel to prevent spatter adherence.

Head Cap
Using fluororesin prevents spatter from adhering.
* Spatter means the zinc powder produced when welding.
Adhering spatter to the Limit Switch may cause malfunction of lever or lamp cover.

The lack of gap prevents spatter powder from clogging.

Long-life Switches

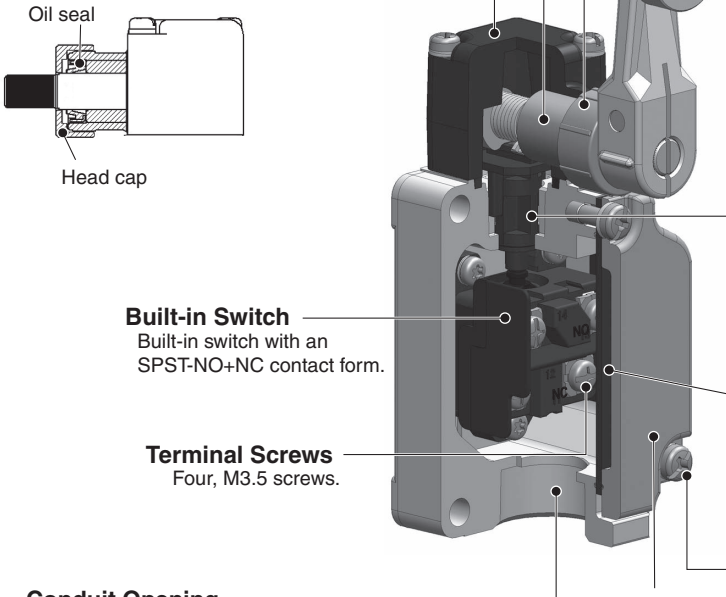

Head

You can remove the two screws to mount the head in any of the four possible directions.

Shield Structure

A head cap and oil seal form a double-seal structure. Excellent durability and reliability are ensured.

Head Cap

The head cap helps prevent the entry of cutting chips. You can use the protrusion on the cap to confirm the set position.

Actuator

Roller

The roller is made of self-lubricating sintered stainless steel.
It provides superior resistance to wear.

Lever

The lever is forged from anti-corrosive aluminum alloy. It provides superior corrosion resistance and outstanding strength. With a roller lever actuator, the actuator position can be set anywhere within 360°. (The lever cannot be mounted in the opposite direction.)

Operating Plunger

PEEK resin is used. It provides superior resistance to wear. You can change the mounting direction to use any one of the three operating directions (both sides, left side, or right side).

Built-in Switch

Built-in switch with an SPST-NO+NC contact form.

Cover Seal

High sealing performance is achieved. The seal also serves as a spacer.
There is no troublesome insulating paper, making it easy to work with the Switch.

Terminal Screws

Four, M3.5 screws.

Cover Setscrew

A combination Philips-slotted screw is used. A retainer prevents the screw from falling from the cover even when the screw is loose.

Conduit Opening

In addition to parallel threads for G1/2 tubing, direct-wired and pre-wired connectors have been added to the series.

Cover

Dimensions and Operating Characteristics

(Unit: mm)

General-purpose Switches

Standard Switches

Switches with Roller Lever Actuators

Basic, High-sensitivity, and High-precision Switches

Roller lever R38

Basic **High-sensitivity** **High-precision**

WLCA2-N **WLG2-N** **WLGCA2-N**

WLCA2-2-N

WLCA2-2N-N

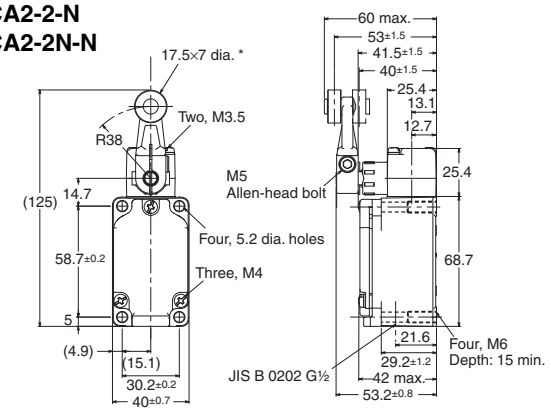

* Stainless sintered roller

The only difference in the shape for High-sensitivity and High-precision Switches is the set position marker plate.

Roller lever R50

Basic

WLCA2-7-N

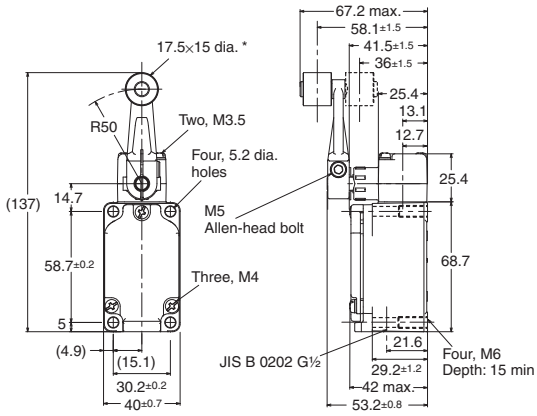

* Stainless sintered roller

Roller lever R63

Basic

WLCA2-8-N

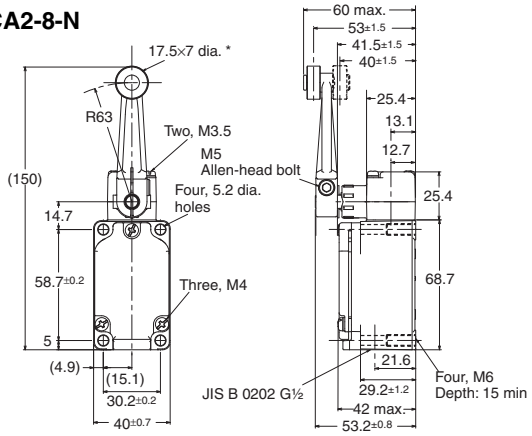

* Stainless sintered roller

Adjustable roller lever

Basic **High-sensitivity**

WLCA12-N **WLG12-N**

WLCA12-2-N

WLCA12-2N-N

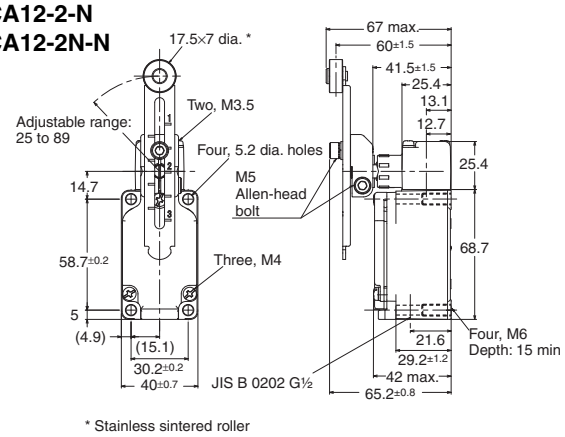

* Stainless sintered roller

Only the external appearance of the set position indicator plate varies on high-sensitivity models.

Note: Unless otherwise indicated, a tolerance of ±0.4 mm applies to all dimensions.

Operating characteristics		Model	WLCA2-N	WLCA2-2-N	WLCA2-2N-N	WLG2-N	WLCA2-7-N	WLCA2-8-N	WLGCA2-N
Operating force	OF	max.	13.34 N	13.34 N	13.34 N	13.34 N	10.2 N	8.04 N	13.34 N
Release force	RF	min.	1.18 N	1.18 N	1.18 N	1.18 N	0.9 N	0.71 N	1.18 N
Pretravel	PT		15±5°	25±5°	20° max.	$10^{\circ}{}^{+2^{\circ}}_{-1^{\circ}}$	15±5°	15±5°	$5^{\circ}{}^{+2^{\circ}}_{0^{\circ}}$
Overtravel	OT	min.	70°	60°	70°	80°	70°	70°	80°
Movement Differential	MD	max.	12°	16°	10°	7°	12°	12°	3°

Operating characteristics		Model	WLCA12-N *1	WLCA12-2-N *1	WLG12-2N-N *1	WLG12-N *1
Operating force	OF	max.	13.34 N	13.34 N	13.34 N	13.34 N
Release force	RF	min.	1.18 N	1.18 N	1.18 N	1.18 N
Pretravel	PT		15±5°	25±5°	20° max.	$10^{\circ}{}^{+2^{\circ}}_{-1^{\circ}}$
Overtravel	OT	min.	70°	60°	70°	80°
Movement Differential	MD	max.	12°	16°	10°	7°

***1.** The operating characteristics for WLCA12-N, WLCA12-2-N, WLCA12-2N-N, and WLG12-N are measured at the lever length of 38 mm.

Switches with Roller Lever Actuators

Basic, High-sensitivity, and Protective Switches

Adjustable rod lever 25 to 140 mm

Basic **High-sensitivity**

WLCL-N **WLGL-N**

WLCL-2-N

WLCL-2N-N

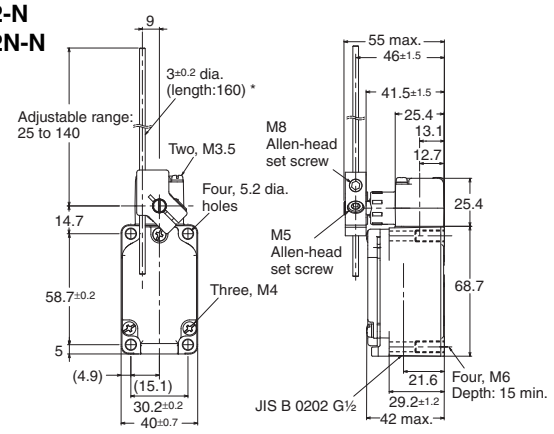

* Stainless steel rod

Only the external appearance of the set position indicator plate varies on high-sensitivity models.

Adjustable rod lever

Basic

WLCAL4-N

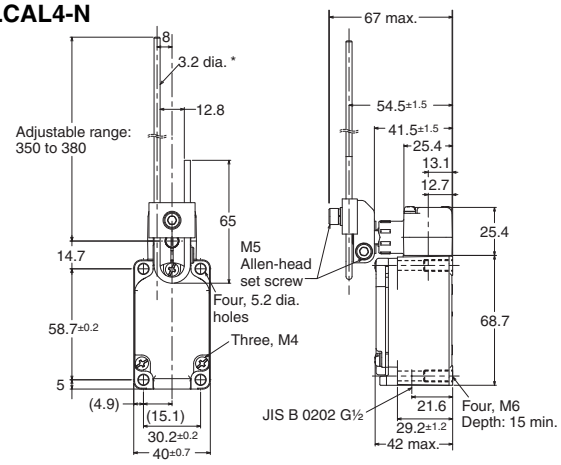

* Stainless steel rod

Rod spring lever

Basic

WLCAL5-N

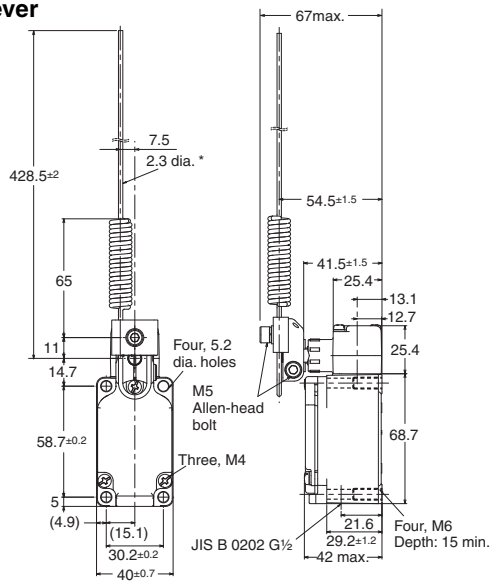

* Piano wire

Fork lever lock

Protective Switches

WLCA32-41-N

WLCA32-42-N

WLCA32-43-N

WLCA32-44-N

The WLCA32-41-N is shown in the following diagram.

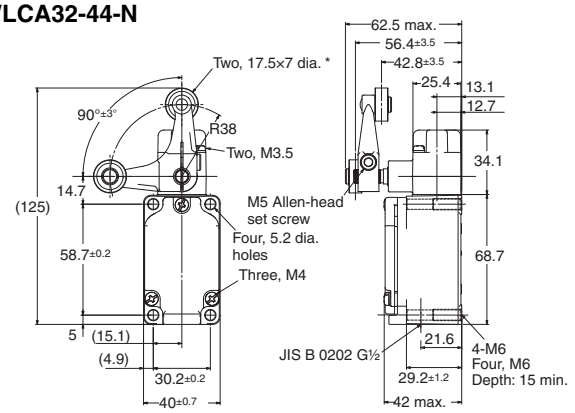

* Plastic Roller
(The WLCA32-041-N to WLCA32-044-N have stainless steel rollers.)

Note: 1. Unless otherwise indicated, a tolerance of ±0.4 mm applies to all dimensions.

Operating characteristics		Model	WLCL-N *1	WLCL-2-N *1	WLCL-2N-N *1	WLGL-N *1	WLCAL4-N *2	WLCAL5-N
Operating force	OF	max.	1.39 N	1.39 N	1.39 N	2.84 N	0.98 N	0.9 N
Release force	RF	min.	0.27 N	0.27 N	0.27 N	0.25 N	0.15 N	0.09 N
Pretravel	PT		15±5°	25±5°	20° max.	$10^{\circ}{}^{+2^{\circ}}_{-1^{\circ}}$	15±5°	15±5°
Overtravel	OT	min.	70°	60°	70°	80°	70°	70°
Movement Differential	MD	max.	12°	16°	10°	7°	12°	12°

Note: The actuator on the WLCAL4-N and WLCAL5-N is heavy, which may result in resetting problems depending on the direction the Switch is mounted. Mount the Switch so that the actuator is facing downwards to prevent this problem from occurring.

***1.** The operating characteristics for WLCL-N, WLCL-2-N, WLCL-2N-N, and WLGL-N are measured at the lever length of 140 mm.

***2.** The operating characteristics of WLCAL4-N are measured at a rod length of 380 mm.

Operating characteristics	Model	WLCA32-41 to 44-N
Force necessary to reverse the direction of the lever	max.	11.77 N
Movement until the lever reverses		50±5°
Movement until switch operation	max.	55°
Movement after switch operation	min.	35°

Switches with Plunger Actuators

Basic Switches

Sealed Top Plunger
WLD18-N

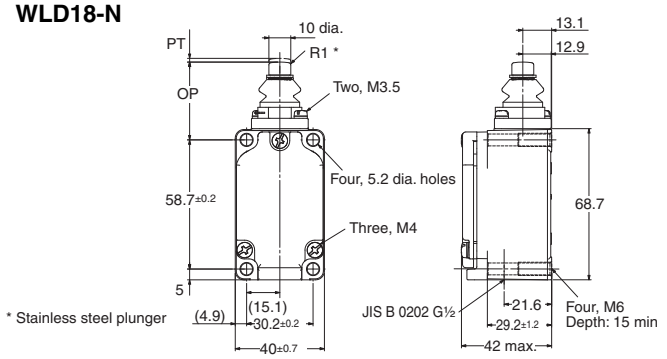

Horizontal Plunger
WLSD-N

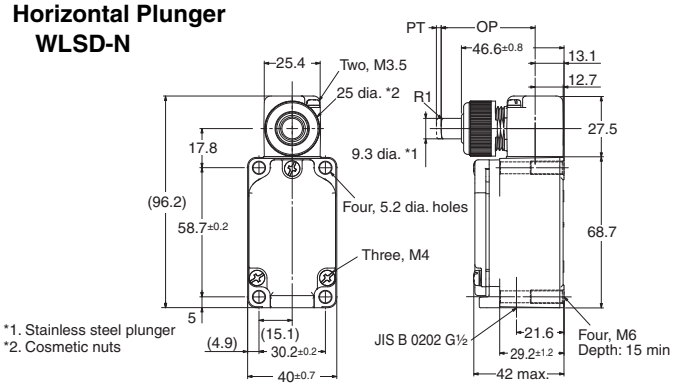

Sealed Top-roller Plunger
WLD28-N

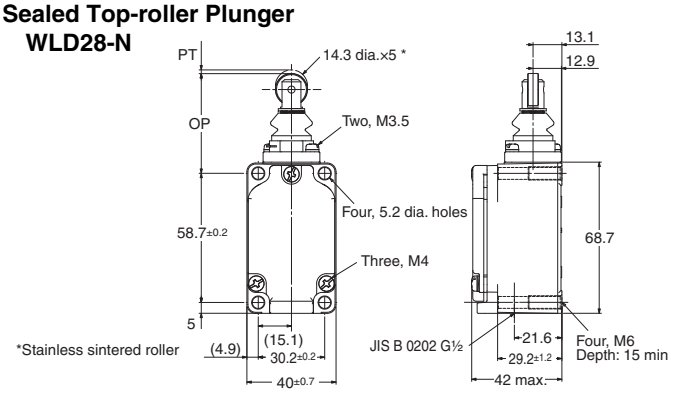

Horizontal-roller Plunger
WLSD2-N

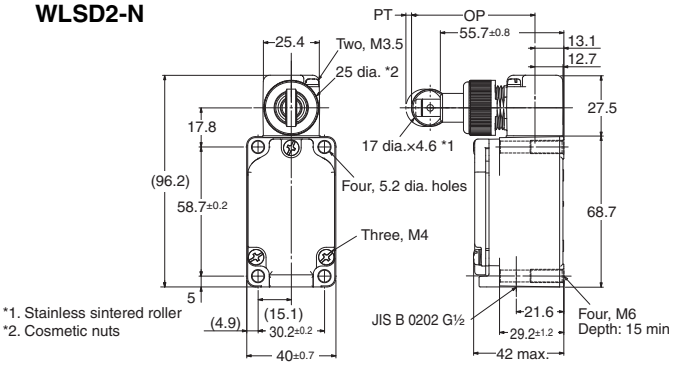

Sealed Top-ball Plunger
WLD38-N

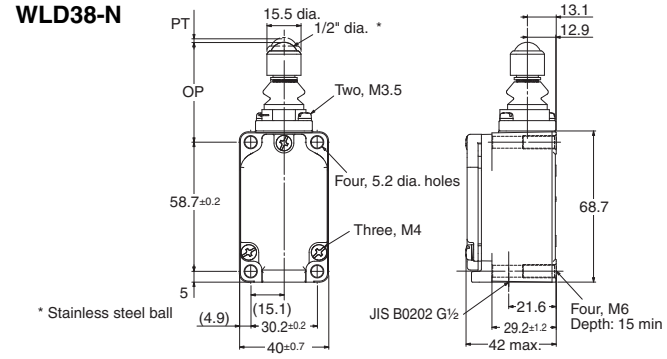

Horizontal-ball Plunger
WLSD3-N

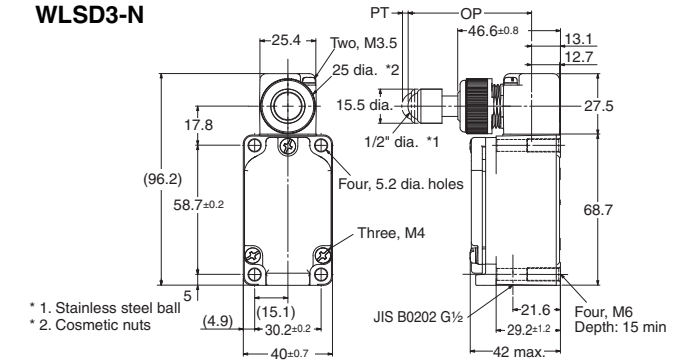

Note: Unless otherwise indicated, a tolerance of ±0.4 mm applies to all dimensions.

Operating characteristics		Model	WLD18-N	WLD28-N	WLD38-N	WLSD-N	WLSD2-N	WLSD3-N
Operating force	OF	max.	26.67 N	16.67 N	16.67 N	40.03 N	40.03 N	40.03 N
Release force	RF	min.	8.92 N	4.41 N	4.41 N	8.89 N	8.89 N	8.89 N
Pretravel	PT	max.	1.7 mm	1.7 mm	1.7 mm	2.8 mm	2.8 mm	2.8 mm
Overtravel	OT	min.	6.4 mm	5.6 mm	5.6 mm	6.4 mm	5.6 mm	4 mm
Movement Differential	MD	max.	1 mm	1 mm	1 mm	1 mm	1 mm	1 mm
Operating position	OP		34±0.8 mm	44±0.8 mm	44.5±0.8 mm	40.6±0.8 mm	54.2±0.8 mm	54.1±0.8 mm
Total travel position	TTP	max.	29.5 mm	39.5 mm	41 mm	—	—	—

Switches with Flexible Rod Actuators

Basic Switches

Coil Spring
WLNJ-N

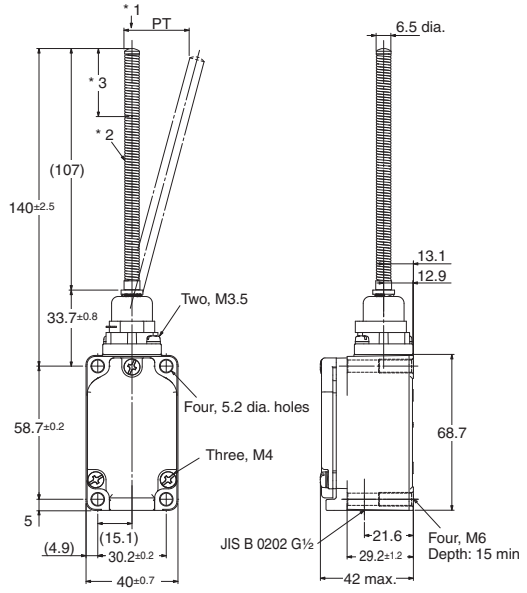

*1. Do not operate the Switch in the direction of the axial center.
*2. Stainless steel coil spring.
*3. The range for operation is 1/3rd of the overall spring length from the end of the spring.

Coil Spring (Multi-wire)
WLNJ-30-N

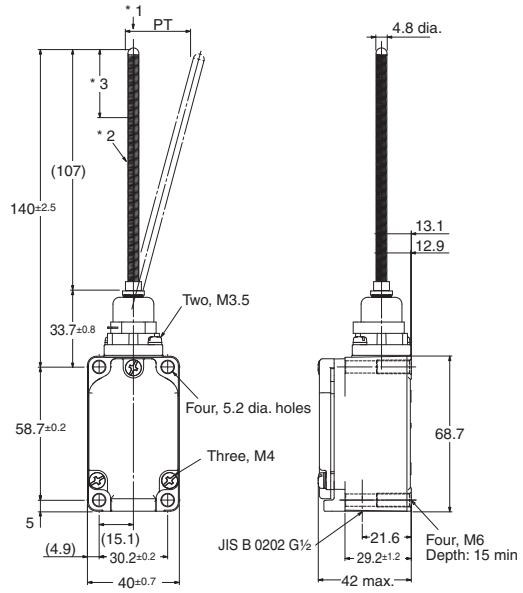

*1. Do not operate the Switch in the direction of the axial center.
*2. Piano wire coil spring.
*3. The range for operation is 1/3rd of the overall spring length from the end of the spring.

Resin Rod
WLNJ-2-N

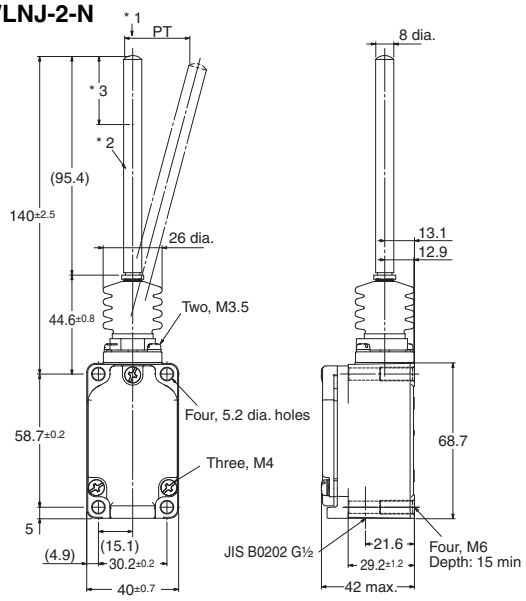

*1. Do not operate the Switch in the direction of the axial center.
*2. Polyamide Resin Rod
*3. The range for operation is 1/3rd of the overall rod length from the end of the rod.

Steel Wire
WLNJ-S2-N

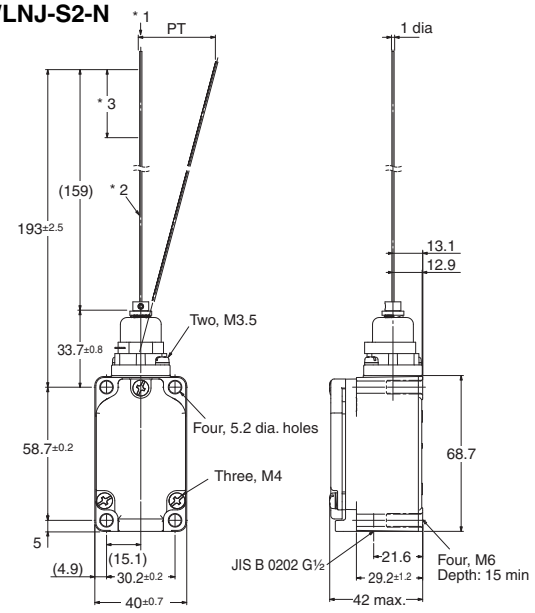

*1. Do not operate the Switch in the direction of the axial center.
*2. Stainless steel wire.
*3. The range for operation is 1/3rd of the overall wire length from the end of the wire.

Note: Unless otherwise indicated, a tolerance of ±0.4 mm applies to all dimensions.

Operating characteristics / Model		WLNJ-N	WLNJ-30-N	WLNJ-2-N	WLNJ-S2-N
Operating force	OF Max.	1.47 N	1.47 N	1.47 N	0.28 N
Pretravel	PT	20±10 mm	20±10 mm	40±20 mm	40±20 mm

* These values are for the top end of the spring, rod, or wire.

Sensor I/O connector Switches

(For details about applicable cables, refer to ***Connecting Sensor I/O Connectors Cable and Socket*** on page 16.)

Switches with Roller Lever Actuators

Switches with Direct-wired Connectors
Basic Switches
WLCA2-LDK13-N
High-sensitivity Switches
WLG2-LDK13-N
High-precision Switches
WLGCA2-LDK13-N

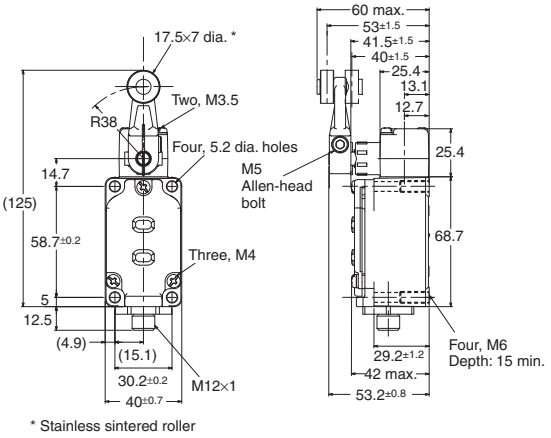

The only difference in the shape for High-sensitivity and High-precision Switches is the set position marker plate.

Switches with Pre-wired Connectors
Basic Switches
WLCA2-LD-M1J-N
High-sensitivity Switches
WLG2-LD-M1J-N
High-precision Switches
WLGCA2-LD-M1J-N

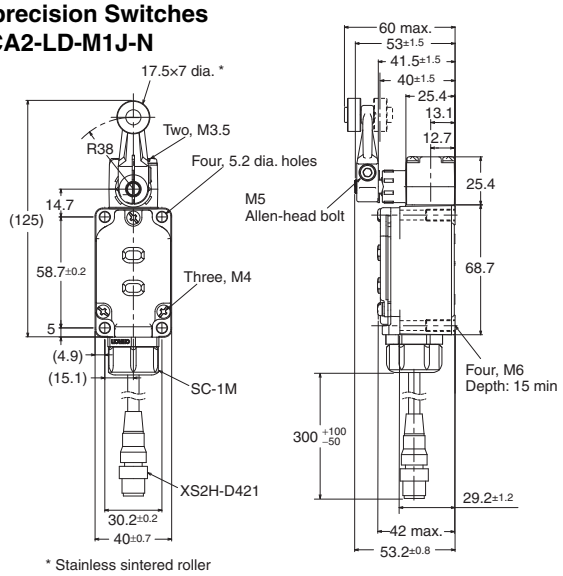

The only difference in the shape for High-sensitivity and High-precision Switches is the set position marker plate.

Note: 1. Unless otherwise indicated, a tolerance of ±0.4 mm applies to all dimensions.
2. The following diagrams are for a indicator-equipped models.

Operating characteristics	Model		Basic Switches	High-sensitivity Switches	High-precision Switches
Operating force	**OF**	**max.**	13.34 N	13.34 N	13.34 N
Release force	**RF**	**min.**	1.18 N	1.18 N	1.18 N
Pretravel	**PT**		15±5°	$10^{\circ}{}^{+2^{\circ}}_{-1^{\circ}}$	$5^{\circ}{}^{+2^{\circ}}_{0^{\circ}}$
Overtravel	**OT**	**min.**	70°	80°	80°
Movement Differential	**MD**	**max.**	12°	7°	3°

Operation indicator Switches

Roller lever
WLCA2-LD-N
WLCA2-LE-N

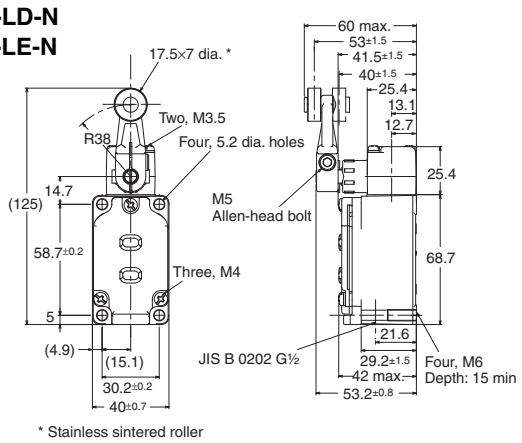

Operating characteristics	Model		WLCA2-LD-N WLCA2-LE-N
Operating force	**OF**	**max.**	13.34 N
Release force	**RF**	**min.**	1.18 N
Pretravel	**PT**		15±5°
Overtravel	**OT**	**min.**	70°
Movement Differential	**MD**	**max.**	12°

Note: 1. Unless otherwise indicated, a tolerance of ±0.4 mm applies to all dimensions.

Spatter-prevention Switches

Switches with Roller Lever Actuators

Switches with Screw Terminals
Basic Switches
WLCA2-□S-N
High-sensitivity Switches
WLG2-□S-N
High-precision Switches
WLGCA2-□S-N

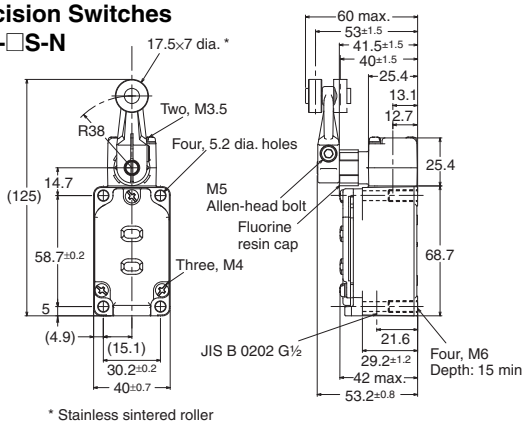

* Stainless sintered roller

The only difference in the shape for High-sensitivity and High-precision Switches is the set position marker plate.

Switches with Pre-wired Connectors
WLCA2-□S-M1J-N

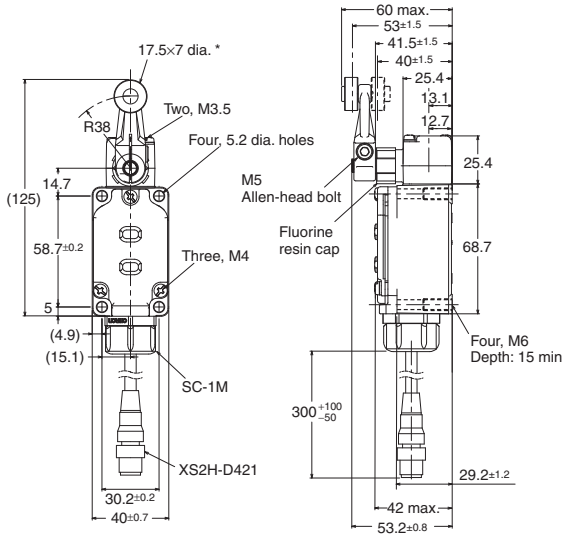

* Stainless sintered roller

Switches with Sealed Top-roller Plungers

Switches with Screw Terminals
WLD28-□S-N

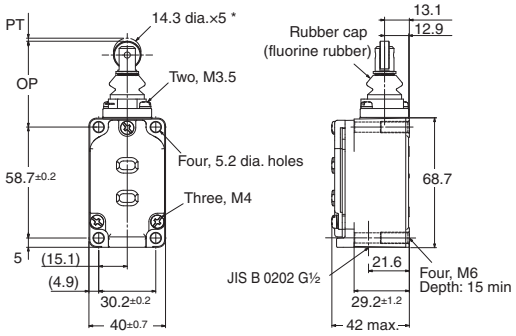

*Stainless sintered roller

Switches with Pre-wired Connectors
WLD28-□S-M1J-N

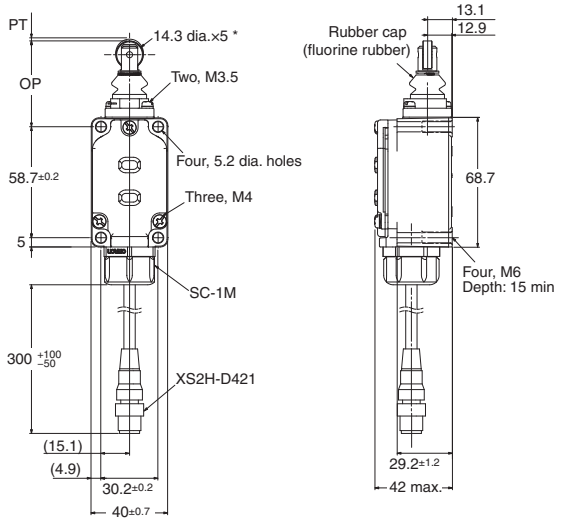

*Stainless sintered roller

Note: 1. Unless otherwise indicated, a tolerance of ±0.4 mm applies to all dimensions.
2. The above diagrams are for Indicator-equipped Switches.

Operating characteristics		Actuator	Switches with Roller Lever Actuators			Switches with Sealed Top-roller Plungers
			Basic Switches	High-sensitivity Switches	High-precision Switches	
Operating force	OF	max.	13.34 N	13.34 N	13.34 N	16.67 N
Release force	RF	min.	1.18 N	1.18 N	1.18 N	4.41 N
Pretravel	PT		15±5°	$10^{\circ}{}^{+2^{\circ}}_{-1^{\circ}}$	$5^{\circ}{}^{+2^{\circ}}_{0^{\circ}}$	Max.1.7 mm
Overtravel	OT	min.	70°	80°	80°	5.6 mm
Movement Differential	MD	max.	12°	7°	3°	1 mm
Operating position	OT		—	—	—	44±0.8 mm
Total travel position	TTP	max.	—	—	—	39.5 mm

Long-life Switches

Switches with Roller Lever Actuators

Switches with Screw Terminals
Basic Switches
WLMCA2-LD-N
High-sensitivity Switches
WLMG2-LD-N
High-precision Switches
WLMGCA2-LD-N

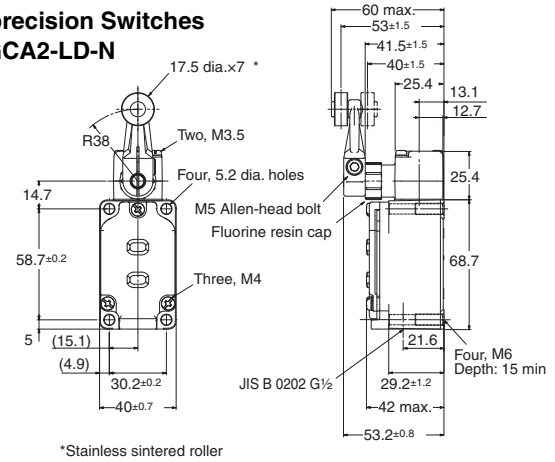

*Stainless sintered roller

The only difference in the shape for High-sensitivity and High-precision Switches is the set position marker plate.

Switches with Direct-wired Connectors
Basic Switches
WLMCA2-LDK13-N
High-sensitivity Switches
WLMG2-LDK13-N
High-precision Switches
WLMGCA2-LDK13-N

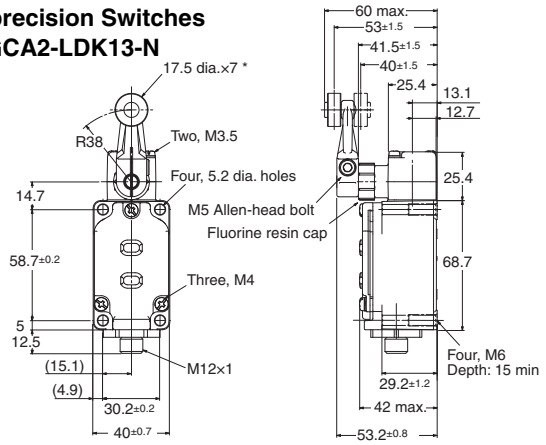

*Stainless sintered roller

The only difference in the shape for High-sensitivity and High-precision Switches is the set position marker plate.

Switches with Pre-wired Connectors
Basic Switches
WLMCA2-LD-M1J-N
High-sensitivity Switches
WLMG2-LD-M1J-N
High-precision Switches
WLMGCA2-LD-M1J-N

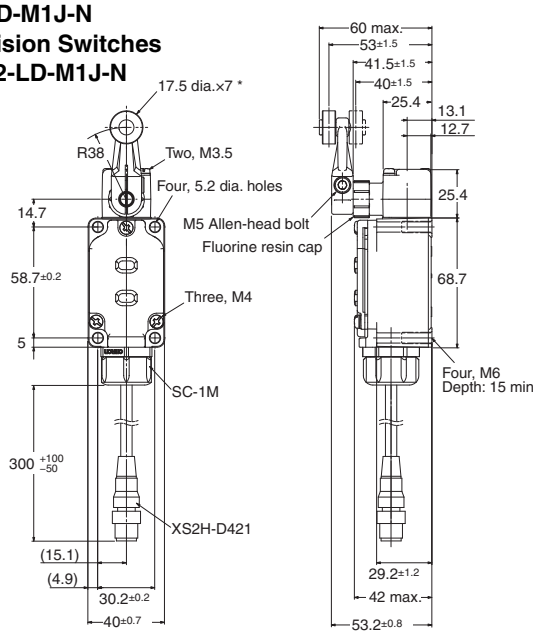

*Stainless sintered roller

The only difference in the shape for High-sensitivity and High-precision Switches is the set position marker plate.

Note: 1. Unless otherwise indicated, a tolerance of ±0.4 mm applies to all dimensions.
2. The above diagrams are for Indicator-equipped Switches.

Operating characteristics	Actuator		Switches with Roller Lever Actuators		
			Basic Switches	High-sensitivity Switches	High-precision Switches
Operating force	**OF**	**max.**	13.34 N	13.34 N	13.34 N
Release force	**RF**	**min.**	1.18 N	1.18 N	1.18 N
Pretravel	**PT**		15±5°	$10^{\circ}{}^{+2^{\circ}}_{-1^{\circ}}$	$5^{\circ}{}^{+2^{\circ}}_{0^{\circ}}$
Overtravel	**OT**	**min.**	70°	80°	80°
Movement Differential	**MD**	**max.**	12°	7°	3°

Actuators (Levers Only)

Lever: Only rotating lever models are illustrated.

WL-1A100
Standard Lever

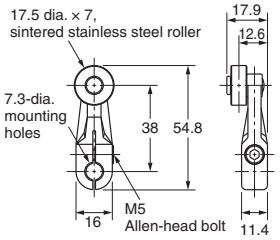

WL-1A115
Resin Roller

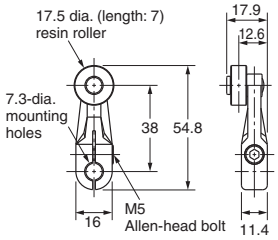

WL-1A400
Bearing Roller

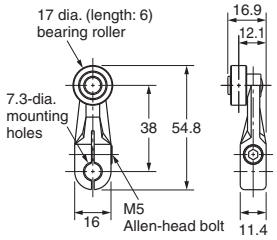

WL-1A118
Nylon Roller:
Roller Width: 30 mm

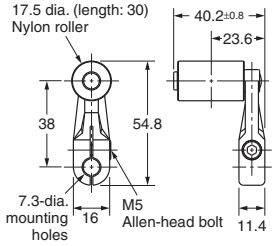

WL-1A105
Double Nuts

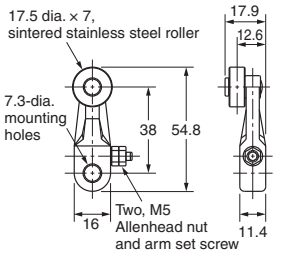

WL-1A103S
Spatter

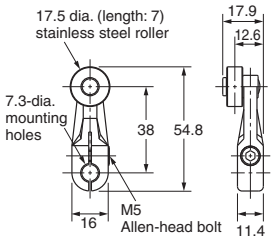

WL-1A200
Lever Length: 50
Roller Width: 15

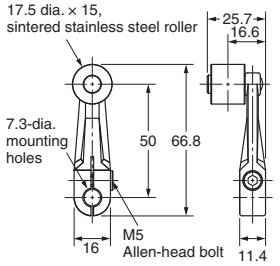

WL-1A300
Lever Length: 63

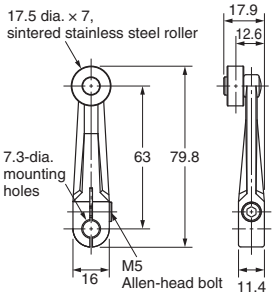

WL-2A100

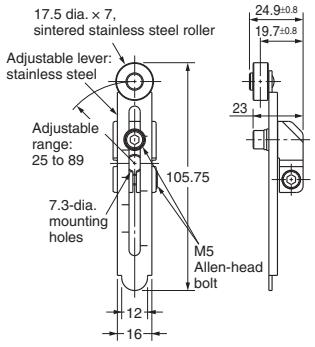

WL-2A111
Resin Roller

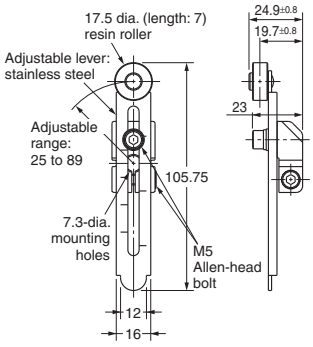

WL-2A107
Double Nuts

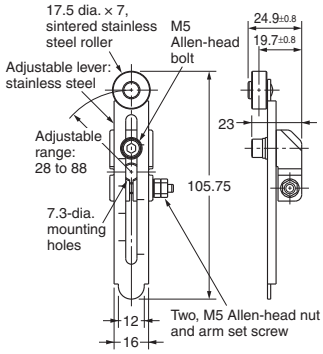

WL-2A108
Resin Roller

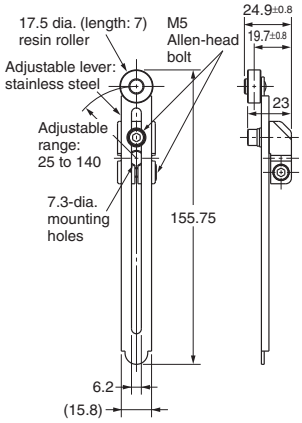

WL-2A122

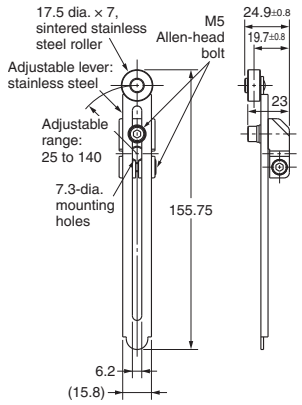

WL-2A106

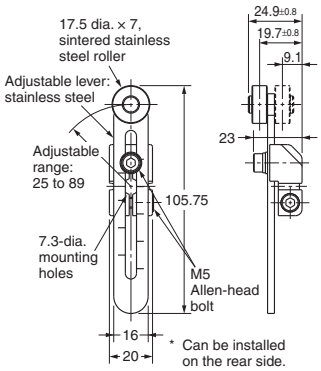

WL-2A130

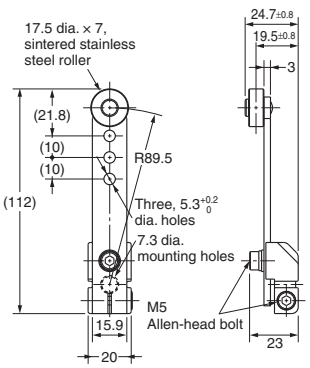

WL-2A104

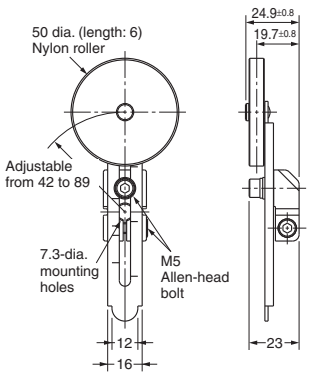

Note: 1. Unless otherwise indicated, a tolerance of ±0.4 mm applies to all dimensions.
Lever: Only rotating lever models are illustrated.

WL-2A110

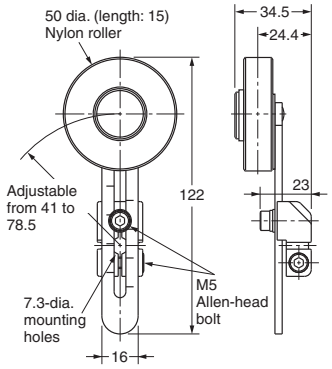

WL-2A105

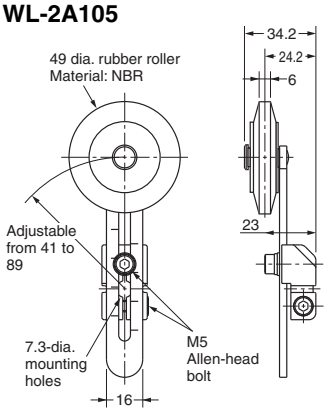

WL-1A106

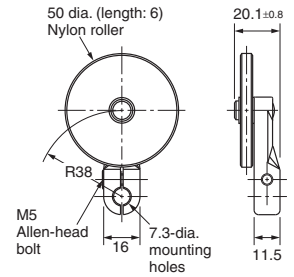

WL-1A110

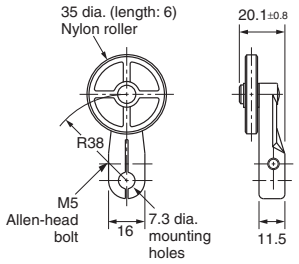

WL-4A100

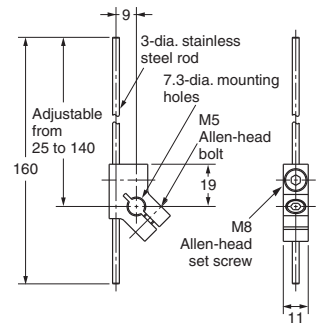

WL-4A201

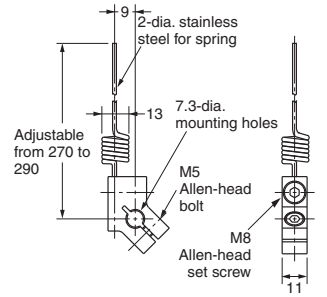

WL-3A100

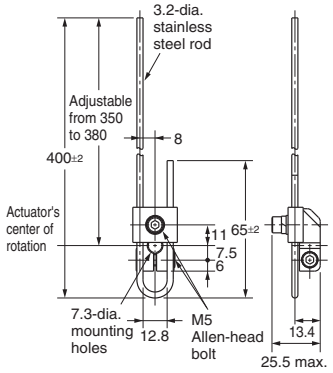

WL-3A106 Double Nut

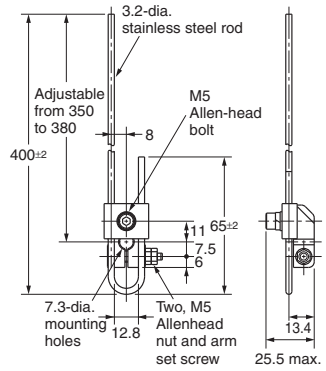

WL-3A108

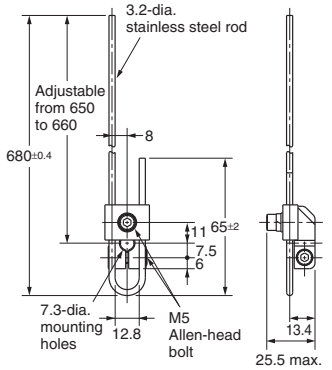

WL-3A200

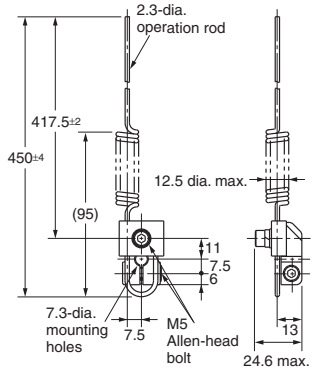

WL-3A203

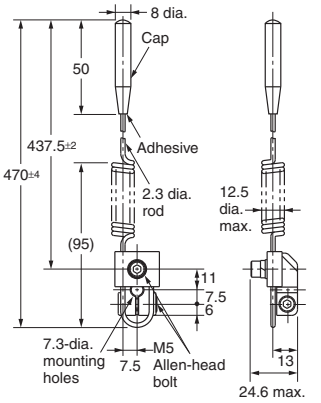

WL-4A112

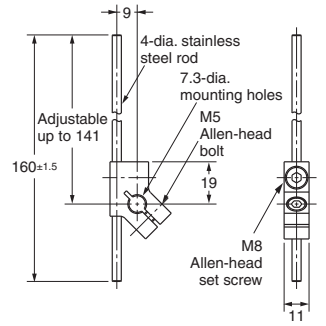

WL-2A129

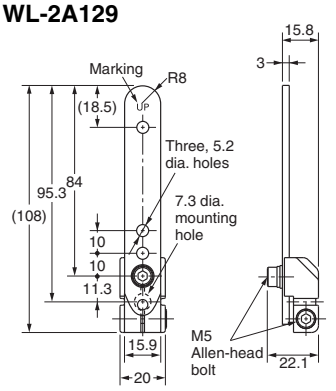

WL-5A101

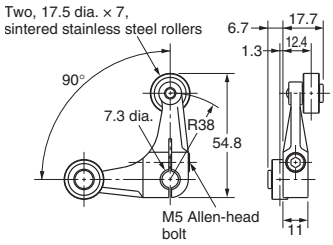

WL-5A100 has a plastic roller

WL-5A103

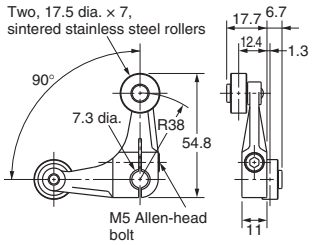

WL-5A102 has a plastic roller

WL-5A105

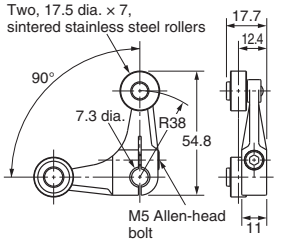

WL-5A104 has a plastic roller

Note: 1. Unless otherwise indicated, a tolerance of ±0.4 mm applies to all dimensions.
2. When using the adjustable roller (rod) lever, make sure that the lever is facing downwards.
Use caution, as telegraphing (the Switch turns ON and OFF repeatedly due to inertia) may occur.

Model Replacement Table

WL	WL-N
WLCA2	WLCA2-N
WL01CA2	WLCA2-N
WLH2	WLCA2-N
WL01H2	WLCA2-N
WLG2	WLG2-N
WL01G2	WLG2-N
WLCA2-2	WLCA2-2-N
WL01CA2-2	WLCA2-2-N
WLCA2-2N	WLCA2-2N-N
WL01CA2-2N	WLCA2-2N-N
WLGCA2	WLGCA2-N
WL01GCA2	WLGCA2-N
WLCA2-7	WLCA2-7-N
WL01CA2-7	WLCA2-7-N
WLCA2-8	WLCA2-8-N
WL01CA2-8	WLCA2-8-N
WLCA12	WLCA12-N
WL01CA12	WLCA12-N
WLH12	WLCA12-N
WL01H12	WLCA12-N
WLG12	WLG12-N
WL01G12	WLG12-N
WLCA12-2	WLCA12-2-N
WL01CA12-2	WLCA12-2-N
WLCA12-2N	WLCA12-2N-N
WL01CA12-2N	WLCA12-2N-N
WLCL	WLCL-N
WL01CL	WLCL-N
WLHL	WLCL-N
WL01HL	WLCL-N
WLGL	WLGL-N
WL01GL	WLGL-N
WLCL-2	WLCL-2-N
WLCL-2N	WLCL-2N-N
WL01CL-2N	WLCL-2N-N
WLHAL4	WLCAL4-N
WLHAL5	WLCAL5-N
WLCA32-41	WLCA32-41-N
WL01CA32-41	WLCA32-41-N
WLCA32-42	WLCA32-42-N
WLCA32-43	WLCA32-43-N
WL01CA32-43	WLCA32-43-N
WLCA32-44	WLCA32-44-N
WL01CA32-44	WLCA32-44-N
WLD	WLD18-N
WL01D	WLD18-N
WLD2	WLD28-N
WL01D2	WLD28-N
WLD3	WLD38-N
WL01D3	WLD38-N
WLD28	WLD28-N
WL01D28	WLD28-N

WL	WL-N
WLSD	WLSD-N
WL01SD	WLSD-N
WLSD2	WLSD2-N
WL01SD2	WLSD2-N
WLSD3	WLSD3-N
WL01SD3	WLSD3-N
WLNJ	WLNJ-N
WL01NJ	WLNJ-N
WLNJ-30	WLNJ-30-N
WL01NJ-30	WLNJ-30-N
WLNJ-2	WLNJ-2-N
WL01NJ-2	WLNJ-2-N
WLNJ-S2	WLNJ-S2-N
WL01NJ-S2	WLNJ-S2-N
WLCA2-LE	WLCA2-LE-N
WLCA2-LD	WLCA2-LD-N
WLH2-LE	WLCA2-LE-N
WLH2-LD	WLCA2-LD-N
WLG2-LE	WLG2-LE-N
WLG2-LD	WLG2-LD-N
WLCA2-2LE	WLCA2-2LE-N
WLCA2-2LD	WLCA2-2LD-N
WLCA2-2NLE	WLCA2-2NLE-N
WLCA2-2NLD	WLCA2-2NLD-N
WLGCA2-LE	WLGCA2-LE-N
WLGCA2-LD	WLGCA2-LD-N
WLCA2-7LE	WLCA2-7LE-N
WLCA2-7LD	WLCA2-7LD-N
WLCA2-8LE	WLCA2-8LE-N
WLCA2-8LD	WLCA2-8LD-N
WLCA12-LE	WLCA12-LE-N
WLCA12-LD	WLCA12-LD-N
WLH12-LE	WLCA12-LE-N
WLH12-LD	WLCA12-LD-N
WLG12-LE	WLG12-LE-N
WLG12-LD	WLG12-LD-N
WLCA12-2LE	WLCA12-2LE-N
WLCA12-2LD	WLCA12-2LD-N
WLCA12-2NLE	WLCA12-2NLE-N
WLCA12-2NLD	WLCA12-2NLD-N
WLCL-LE	WLCL-LE-N
WLCL-LD	WLCL-LD-N
WLHL-LE	WLCL-LE-N
WLHL-LD	WLCL-LD-N
WLGL-LE	WLGL-LE-N
WLGL-LD	WLGL-LD-N
WLCL-2LE	WLCL-2LE-N
WLCL-2LD	WLCL-2LD-N
WLCL-2NLE	WLCL-2NLE-N
WLCL-2NLD	WLCL-2NLD-N
WLHAL4-LE	WLCAL4-LE-N
WLHAL4-LD	WLCAL4-LD-N

WL	WL-N
WLHAL5-LE	WLCAL5-LE-N
WLHAL5-LD	WLCAL5-LD-N
WLCA32-41LE	WLCA32-41LE-N
WLCA32-41LD	WLCA32-41LD-N
WLCA32-42LE	WLCA32-42LE-N
WLCA32-43LE	WLCA32-43LE-N
WLCA32-43LD	WLCA32-43LD-N
WLD-LE	WLD18-LE-N
WLD-LD	WLD18-LD-N
WLD2-LE	WLD28-LE-N
WLD2-LD	WLD28-LD-N
WLD3-LE	WLD38-LE-N
WLD3-LD	WLD38-LD-N
WLD28-LE	WLD28-LE-N
WLD28-LD	WLD28-LD-N
WLSD-LE	WLSD-LE-N
WLSD-LD	WLSD-LD-N
WLSD2-LE	WLSD2-LE-N
WLSD2-LD	WLSD2-LD-N
WLSD3-LE	WLSD3-LE-N
WLSD3-LD	WLSD3-LD-N
WLNJ-LE	WLNJ-LE-N
WLNJ-LD	WLNJ-LD-N
WLNJ-30LE	WLNJ-30LE-N
WLNJ-30LD	WLNJ-30LD-N
WLNJ-2LE	WLNJ-2LE-N
WLNJ-2LD	WLNJ-2LD-N
WLNJ-S2LE	WLNJ-S2LE-N
WLNJ-S2LD	WLNJ-S2LD-N
WLCA2-LDK13	WLCA2-LDK13-N
WLCA2-55LDK13	WLCA2-55LDK13-N
WLCA2-LDK43	WLCA2-LDK43-N
WLCA2-55LDK43	WLCA2-55LDK43-N
WLD2-LDK13	WLD28-LDK13-N
WLD2-55LDK13	WLD28-55LDK13-N
WLD2-LDK43	WLD28-LDK43-N
WLD2-55LDK43	WLD28-55LDK43-N
WLH2-LDK13	WLCA2-LDK13-N
WLH2-55LDK13	WLCA2-55LDK13-N
WLH2-LDK43	WLCA2-LDK43-N
WLH2-55LDK43	WLCA2-55LDK43-N
WLG2-LDK13	WLG2-LDK13-N
WLG2-55LDK13	WLG2-55LDK13-N
WLG2-LDK43	WLG2-LDK43-N
WLG2-55LDK43	WLG2-55LDK43-N
WLGCA2-LDK13	WLGCA2-LDK13-N
WLGCA2-55LDK13	WLGCA2-55LDK13-N
WLGCA2-LDK43	WLGCA2-LDK43-N
WLGCA2-55LDK43	WLGCA2-55LDK43-N
WLCA2-LD-M1J	WLCA2-LD-M1J-N
WLCA2-55LD-M1J	WLCA2-55LD-M1J-N
WLCA2-LD-M1GJ	WLCA2-LD-M1GJ-N

WL-N/WLM-N

WL	WL-N
WLCA2-55LD-M1GJ	WLCA2-55LD-M1GJ-N
WLCA2-55LD-M1JB	WLCA2-55LD-M1JB-N
WLCA2-LD-DGJ03	WLCA2-LD-DGJ-N
WLCA2-55LD-DGJ03	WLCA2-55LD-DGJ-N
WLCA2-LD-DK1EJ03	WLCA2-LD-DK1EJ-N
WLCA2-55LD-DK1EJ03	WLCA2-55LD-DK1EJ-N
WLD2-LD-M1J	WLD28-LD-M1J-N
WLD2-55LD-M1J	WLD28-55LD-M1J-N
WLD2-LD-M1GJ	WLD28-LD-M1GJ-N
WLD2-55LD-M1GJ	WLD28-55LD-M1GJ-N
WLD2-55LD-M1JB	WLD28-55LD-M1JB-N
WLD2-LD-DGJ03	WLD28-LD-DGJ-N
WLD2-LD-DK1EJ03	WLD28-LD-DK1EJ-N
WLD2-55LD-DK1EJ03	WLD28-55LD-DK1EJ-N
WLH2-LD-M1J	WLCA2-LD-M1J-N
WLH2-LD-M1GJ	WLCA2-LD-M1GJ-N
WLH2-LD-DGJ03	WLCA2-LD-DGJ-N
WLG2-LD-M1J	WLG2-LD-M1J-N
WLG2-LD-M1GJ	WLG2-LD-M1GJ-N
WLG2-55LD-M1GJ	WLG2-55LD-M1GJ-N
WLG2-LD-M1JB	WLG2-LD-M1JB-N
WLG2-55LD-M1JB	WLG2-55LD-M1JB-N
WLG2-LD-DGJ03	WLG2-LD-DGJ-N
WLG2-55LD-DGJ03	WLG2-55LD-DGJ-N
WLG2-LD-DK1EJ03	WLG2-LD-DK1EJ-N
WLG2-55LD-DK1EJ03	WLG2-55LD-DK1EJ-N
WLGCA2-LD-M1J	WLGCA2-LD-M1J-N
WLGCA2-55LD-M1J	WLGCA2-55LD-M1J-N
WLGCA2-LD-M1GJ	WLGCA2-LD-M1GJ-N
WLGCA2-55LD-M1JB	WLGCA2-55LD-M1JB-N
WLGCA2-55LD-DGJ03	WLGCA2-55LD-DGJ-N
WLCA2-55	WLCA2-55-N
WLCA2-55LD	WLCA2-55LD-N
WLCA2-55LE	WLCA2-55LE-N
WLCA2-139	WLCA2-139-N
WLCA2-139LD2	WLCA2-139LD2-N
WLCA2-139LD3	WLCA2-139LD3-N
WLCA2-140	WLCA2-140-N
WLCA2-140LD2	Ask your OMRON representative.
WLCA2-140LD3	Ask your OMRON representative.
WLCA2-141	WLCA2-141-N
WLCA2-141LD2	WLCA2-141LD2-N
WLCA2-141LD3	WLCA2-141LD3-N
WLCA2-RP60	WLCA2-RP60-N
WLCA2-RP60LD2	WLCA2-RP60LD2-N
WLCA2-RP60LD3	WLCA2-RP60LD3-N
WLCA2-TH	WLCA2-TH-N
WLCA2-TC	WLCA2-TC-N
WLCA2-RP	WLCA2-RP-N
WLCA2-P1	WLCA2-P1-N
WLH2-55	WLCA2-55-N
WLH2-55LD	WLCA2-55LD-N

WL	WL-N
WLH2-55LE	WLCA2-55LE-N
WLH2-139	WLCA2-139-N
WLH2-140	WLCA2-140-N
WLH2-141	WLCA2-141-N
WLH2-141LD3	WLCA2-141LD3-N
WLH2-RP60	WLCA2-RP60-N
WLH2-RP60LD3	WLCA2-RP60LD3-N
WLH2-TH	WLCA2-TH-N
WLH2-TC	WLCA2-TC-N
WLH2-RP	WLCA2-RP-N
WLH2-P1	WLCA2-P1-N
WLG2-55	WLG2-55-N
WLG2-55LD	WLG2-55LD-N
WLG2-55LE	WLG2-55LE-N
WLG2-139	WLG2-139-N
WLG2-139LD3	WLG2-139LD3-N
WLG2-140	WLG2-140-N
WLG2-140LD2	Ask your OMRON representative.
WLG2-140LD3	Ask your OMRON representative.
WLG2-141	WLG2-141-N
WLG2-141LD2	WLG2-141LD2-N
WLG2-141LD3	WLG2-141LD3-N
WLG2-RP60	WLG2-RP60-N
WLG2-RP60LD2	WLG2-RP60LD2-N
WLG2-RP60LD3	WLG2-RP60LD3-N
WLG2-TH	WLG2-TH-N
WLG2-TC	WLG2-TC-N
WLG2-RP	WLG2-RP-N
WLG2-P1	WLG2-P1-N
WLCA2-255	WLCA2-255-N
WLCA2-255LD	WLCA2-255LD-N
WLCA2-255LE	WLCA2-255LE-N
WLCA2-2139	WLCA2-2139-N
WLCA2-2139LD2	WLCA2-2139LD2-N
WLCA2-2139LD3	WLCA2-2139LD3-N
WLCA2-2RP60	WLCA2-2RP60-N
WLCA2-2RP60LD2	WLCA2-2RP60LD2-N
WLCA2-2RP60LD3	WLCA2-2RP60LD3-N
WLCA2-2TH	WLCA2-2TH-N
WLCA2-2TC	WLCA2-2TC-N
WLCA2-2N55	WLCA2-2N55-N
WLCA2-2N55LD	WLCA2-2N55LD-N
WLCA2-2N55LE	WLCA2-2N55LE-N
WLCA2-2N139	WLCA2-2N139-N
WLCA2-2N140	WLCA2-2N140-N
WLCA2-2NTH	WLCA2-2NTH-N
WLCA2-2NTC	WLCA2-2NTC-N
WLGCA2-55	WLGCA2-55-N
WLGCA2-55LD	WLGCA2-55LD-N
WLGCA2-55LE	WLGCA2-55LE-N
WLGCA2-139	WLGCA2-139-N
WLGCA2-139LD2	WLGCA2-139LD2-N

WL	WL-N
WLGCA2-139LD3	WLGCA2-139LD3-N
WLGCA2-140	Ask your OMRON representative.
WLGCA2-140LD2	Ask your OMRON representative.
WLGCA2-140LD3	Ask your OMRON representative.
WLGCA2-141	WLGCA2-141-N
WLGCA2-141LD3	WLGCA2-141LD3-N
WLGCA2-RP60	WLGCA2-RP60-N
WLGCA2-RP60LD2	WLGCA2-RP60LD2-N
WLGCA2-RP60LD3	WLGCA2-RP60LD3-N
WLGCA2-TH	WLGCA2-TH-N
WLGCA2-TC	WLGCA2-TC-N
WLGCA2-RP	WLGCA2-RP-N
WLCA12-55	WLCA12-55-N
WLCA12-55LD	WLCA12-55LD-N
WLCA12-55LE	WLCA12-55LE-N
WLCA12-139	WLCA12-139-N
WLCA12-140	WLCA12-140-N
WLCA12-141	WLCA12-141-N
WLCA12-RP60	WLCA12-RP60-N
WLCA12-TH	WLCA12-TH-N
WLCA12-TC	WLCA12-TC-N
WLCA12-RP	WLCA12-RP-N
WLCA12-P1	WLCA12-P1-N
WLH12-TH	WLCA12-TH-N
WLH12-TC	WLCA12-TC-N
WLH12-RP	WLCA12-RP-N
WLH12-P1	WLCA12-P1-N
WLG12-TH	WLG12-TH-N
WLG12-TC	WLG12-TC-N
WLG12-RP	WLG12-RP-N
WLG12-P1	WLG12-P1-N
WLCA12-2TH	WLCA12-2TH-N
WLCA12-2TC	WLCA12-2TC-N
WLCA12-2NTH	WLCA12-2NTH-N
WLCA12-2NTC	WLCA12-2NTC-N
WLCL-55	WLCL-55-N
WLCL-55LD	WLCL-55LD-N
WLCL-139	WLCL-139-N
WLCL-140	WLCL-140-N
WLCL-RP60	WLCL-RP60-N
WLCL-TH	WLCL-TH-N
WLCL-TC	WLCL-TC-N
WLCL-RP	WLCL-RP-N
WLCL-P1	WLCL-P1-N
WLHL-TH	WLCL-TH-N
WLHL-TC	WLCL-TC-N
WLHL-RP	WLCL-RP-N
WLHL-P1	WLCL-P1-N
WLGL-TH	WLGL-TH-N
WLGL-TC	WLGL-TC-N
WLGL-RP	WLGL-RP-N
WLGL-P1	WLGL-P1-N

WL	WL-N
WLCL-2TH	WLCL-2TH-N
WLCL-2TC	WLCL-2TC-N
WLCL-2RP	WLCL-2RP-N
WLCL-2NTH	WLCL-2NTH-N
WLCL-2NTC	WLCL-2NTC-N
WLD2-55	WLD28-55-N
WLD2-55LD	WLD28-55LD-N
WLD2-55LE	WLD28-55LE-N
WLD2-139	WLD28-139-N
WLD2-RP60	WLD28-RP60-N
WLD2-TH	WLD28-TH-N
WLD2-TC	WLD28-TC-N
WLD2-RP	WLD28-RP-N
WLD28-55	WLD28-55-N
WLD28-55LD	WLD28-55LD-N
WLD28-55LE	WLD28-55LE-N
WLD28-139	WLD28-139-N
WLD28-140	WLD28-140-N
WLD28-RP60	WLD28-RP60-N
WLD28-TH	WLD28-TH-N
WLD28-RP	WLD28-RP-N
WLSD-55	WLSD-55-N
WLSD-55LD	WLSD-55LD-N
WLSD-139	WLSD-139-N
WLSD-RP60	WLSD-RP60-N
WLSD-TH	WLSD-TH-N
WLSD-TC	WLSD-TC-N
WLSD-RP	WLSD-RP-N
WLSD2-55	WLSD2-55-N
WLSD2-55LD	WLSD2-55LD-N
WLSD2-139	WLSD2-139-N
WLSD2-140	WLSD2-140-N
WLSD2-RP60	WLSD2-RP60-N
WLSD2-TH	WLSD2-TH-N
WLSD2-TC	WLSD2-TC-N
WLSD2-RP	WLSD2-RP-N
WLNJ-55	WLNJ-55-N
WLNJ-55LD	WLNJ-55LD-N
WLNJ-139	WLNJ-139-N
WLNJ-140	WLNJ-140-N
WLNJ-RP60	WLNJ-RP60-N
WLNJ-TH	WLNJ-TH-N
WLNJ-TC	WLNJ-TC-N
WLNJ-RP	WLNJ-RP-N
WLNJ-255	WLNJ-255-N
WLNJ-255LD	WLNJ-255LD-N
WLNJ-2140	WLNJ-2140-N
WLNJ-2RP60	WLNJ-2RP60-N
WLNJ-2TC	Ask your OMRON representative.
WLNJ-2RP	WLNJ-2RP-N
WLCA2-LEAS	WLCA2-LEAS-N
WLH2-LEAS	WLCA2-LEAS-N

WL	WL-N
WLG2-LEAS	WLG2-LEAS-N
WLCA2-LDAS	WLCA2-LDAS-N
WLH2-LDAS	WLCA2-LDAS-N
WLG2-LDAS	WLG2-LDAS-N
WLCA2-LES	WLCA2-LES-N
WLH2-LES	WLCA2-LES-N
WLG2-LES	WLG2-LES-N
WLGCA2-LES	WLGCA2-LES-N
WLCA2-LDS	WLCA2-LDS-N
WLH2-LDS	WLCA2-LDS-N
WLG2-LDS	WLG2-LDS-N
WLGCA2-LDS	WLGCA2-LDS-N
WLD28-LES	WLD28-LES-N
WLD28-LDS	WLD28-LDS-N
WLMCA2-LD	WLMCA2-LD-N
WLMCA2-LDK13A	WLMCA2-LDK13A-N
WLMCA2-LDK13	WLMCA2-LDK13-N
WLMCA2-LDK43A	WLMCA2-LDK43A-N
WLMCA2-LDK43	WLMCA2-LDK43-N
WLMCA2-LD-M1J	WLMCA2-LD-M1J-N
WLMCA2-LD-DGJ03	WLMCA2-LD-DGJ-N
WLMGCA2-LD	WLMGCA2-LD-N
WLMGCA2-LDK13A	WLMGCA2-LDK13A-N
WLMGCA2-LDK13	WLMGCA2-LDK13-N
WLMGCA2-LDK43A	WLMGCA2-LDK43A-N
WLMGCA2-LDK43	WLMGCA2-LDK43-N
WLMGCA2-LD-M1J	WLMGCA2-LD-M1J-N
WLMH2-LD	WLMCA2-LD-N
WLMH2-LDK13A	WLMCA2-LDK13A-N
WLMH2-LDK13	WLMCA2-LDK13-N
WLMH2-LDK43A	WLMCA2-LDK43A-N
WLMH2-LDK43	WLMCA2-LDK43-N
WLMH2-LD-M1J	WLMCA2-LD-M1J-N
WLMH2-LD-DGJ03	WLMCA2-LD-DGJ-N
WLMG2-LD	WLMG2-LD-N
WLMG2-LDK13A	WLMG2-LDK13A-N
WLMG2-LDK13	WLMG2-LDK13-N
WLMG2-LDK43A	Ask your OMRON representative.
WLMG2-LDK43	WLMG2-LDK43-N
WLMG2-LD-M1J	WLMG2-LD-M1J-N
WLMG2-LD-DGJ03	WLMG2-LD-DGJ-N
WLRCA2	WLRCA2-N
WLRGCA2	WLRGCA2-N
WLRG2	WLRG2-N
WLRH2	WLRCA2-N
WLRCA2-2	WLRCA2-2-N
WLRCA2-2N	WLRCA2-2N-N
WLRCA2	WLRCA2-N
WLRG2	WLRG2-N
WLRH2	WLRCA2-N
WLRCA2-2	WLRCA2-2-N
WLRCA2-2N	WLRCA2-2N-N

WL	WL-N
WLRCL	WLRCA2-N
WLRG2	WLRG2-N
WLRCA2-2	WLRCA2-2-N
WLRCA2-2N	WLRCA2-2N-N
WLRCA32	WLRCA32-N
WLRCA2-LDS	WLRCA2-LDS-N
WLRH2-LES	WLRCA2-LES-N
WLRH2-LDS	WLRCA2-LDS-N
WLRG2-LDS	WLRG2-LDS-N
WLRGCA2-LES	WLRGCA2-LES-N

Safety Precautions

Precautions for Safe Use

- Be sure to ground. If not, there is the possibility that electrical shock occurs.
- Do not touch charged switch terminals while the switch has carry current, otherwise there is the possibility that electrical shock occurs.
- Do not disassemble the limit switch or touch inside of it under supplying power, otherwise there is the possibility that electrical shock occurs.
- Do not touch the wire or rod type actuator in order to prevent injury.
- Connect a fuse which has 1.5 to 2 times higher breaking current than the switch rated current to the switch in series in order to prevent the switch from short-circuit damage.
  On the occasion when using the switch with GB ratings, use a 10A fuse that complies IEC60269, either type gG.
- The durability of switch is depends on the operating condition. Be sure to check the condition with actual using condition before using, and use with the number of times of operating without a performance problem.
- Do not drop the switch. Otherwise, there is the possibility that the switch functions may be spoiled.
- Do not connect a Single Limit Switch to two power supplies that are different in polarity or type.
- Be sure to keep the load current less than the rated value. Otherwise, there is the possibility that the switch may be damage and/or burnout.
- Minimum operating load: 5 VDC 1 mA, resistive load, P level

Note: The P level indicates the standard malfunction level at a reliability level of 60% ($\lambda 60$).
(JISC5003) $\lambda 60 = 0.1 \times 10^{-6}$ per operation, which indicates an estimated malfunction of 1 out of every 10,000,000 operations at a reliability level of 60%.

- Do not use the Switch by itself in atmospheres containing flammable or explosive gases. Arcs and heating resulting from switching may cause fire or explosion.
- Be sure to prevent the foreign materials such like a scrapped cable intrusion in to the switch when wiring. Otherwise, there is the possibility of spoiling the normal operation.
- Never wire to the wrong terminals.
- Do not store or use the switch with following place.
  Where the temperature fluctuates greatly
  Where the humidity is very high and condensation may occur.
  Where the vibration is too much
  Where receiving direct sunshine.
  Where receiving salty wind.
- Do not disassemble and/or modify the switch at anytime. Otherwise, there is the possibility of spoiling the normal operation.
- Do not apply the force such like deformation and/or degeneration to the switch. Otherwise, there is the possibility that the switch functions may be spoiled.

Precautions for Correct Use

Environment

- Take special care to use where there is fine powder, mud and/or foreign materials stacking. And check the condition with actual using condition before using. Then use without a performance problem.
- This switch is only for indoor use. If it is used in outdoor, it may be cause of switch failure.
- Do not keep the Switch in locations with corrosive gas, such as sulfuric gas (H_2S or SO_2), ammonium gas (NH_3), nitric gas (HNO_3), or chlorine gas (Cl_2), or high temperature and humidity. Otherwise, contact failure or corrosion damage may result.
- Seal material may deteriorate if a Switch is used outdoor or where subject to special cutting oils, solvents, or chemicals. Always appraise performance under actual application conditions and set suitable maintenance and replacement periods.
- Install Switches where they will not be directly subject to cutting chips, dust, or dirt. The Actuator and Switch must also be protected from the accumulation of cutting chips or sludge.

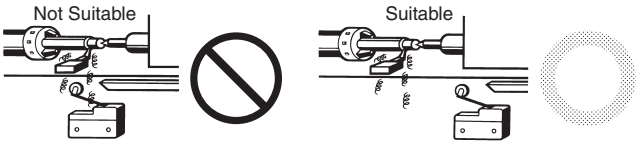

- Constantly subjecting a Switch to vibration or shock can result in wear, which can lead to contact interference with contacts, operation failure, reduced durability, and other problems. Excessive vibration or shock can lead to false contact operation or damage. Install Switches in locations not subject to shock and vibration and in orientations that will not produce resonance.
- The Switches have physical contacts. Using them in environments containing silicon gas will result in the formation of silicon oxide (SiO_2) due to arc energy. If silicon oxide accumulates on the contacts, contact interference can occur. If silicon oil, silicon filling agents, silicon cables, or other silicon products are present near the Switch, suppress arcing with contact protective circuits (surge killers) or remove the source of silicon gas.

Installing the Switch

- To install the Switch, make a mounting panel, as shown in the following diagram, and tighten screws using the correct torque.

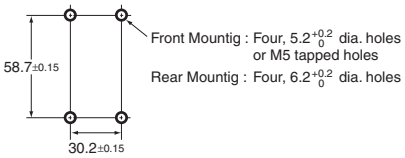

Tightening Torque

- If screws are too loose they can lead to an early malfunction of the Switch, so ensure that all screws are tightened using the correct torque.
- In particular, when changing the direction of the Head, make sure that all screws are tightened again to the correct torque. Do not allow foreign objects to fall into the Switch.

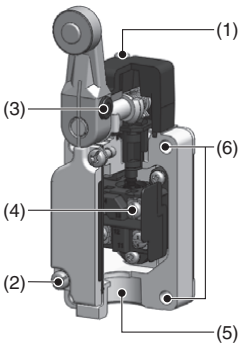

No.	Type	Torque	Screw type
(1)	Head mounting screw	0.78 to 0.88 N•m	M3.5 screw
(2)	Cover mounting screw	1.18 to 1.37 N•m	M4 screw
(3)	Allen-head bolt (for securing the roller lever)	4.90 to 5.88 N•m	M5 hexagon socket head cap screw
(3)	Allen-head bolt (for securing the adjustable rod lever)	0.88 to 1.08 N•m	M8 hexagon socket set screw
(4)	Terminal screw	0.59 to 0.78 N•m	M3.5 screw
(5)	Connector	1.77 to 2.16 N•m	G1/2orPg13.5orM20or 1/2-14NPT
(6)	Unit mounting screw	4.90 to 5.88 N•m	M5 hexagon socket head cap screw

Wring

In the case of mounting screw

- Use M3.5-nylon insulation covered crimp terminals (round type) for wiring.
  Ex.) V1.25-M3.5(RAP1.25-3.5) (J.S.T. Mfg. Co.,Ltd.)
- Appropriate wire size is AWG16 (1.25mm^2).
- Do not supply electric power when wiring.
  Otherwise electric shock may result.
- Do not pull out the wires with excessive force.
  It may cause of coming off the wire.
- Use crimp terminals for wiring.
- In the case of lump unit, to avoid interference between lump unit and crimp terminals, wire according to right wiring figure.
  Attach the lump unit spring to terminal screw certainly otherwise itÅfs possible to be destroyed or shorted.
- The ground terminal is only installed on models with ground terminals.

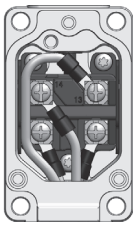

In the case of prewired connecter and direct connecter

- Holding the connecter certainly when pulling connecter.
- Don't pull the cable holding it.

How to handle

Changing direction of the head

- By removing the screws in the two corners of the head, the head can be set any of four directions. Be sure to change the plunger for internal operations at the same time.

Built-in Switch

- Do not remove or replace the built-in switch.

Overtravel Markers

- All Switches with Roller Lever Actuators except for Switches with Fork Lever Locks and Low-temperature Switches have a set position marker plate.
- To allow the roller lever type actuator to travel properly, set the roller lever according to the dog or cam stroke so that the arrowhead of the lever is positioned within overtravel markers as shown.

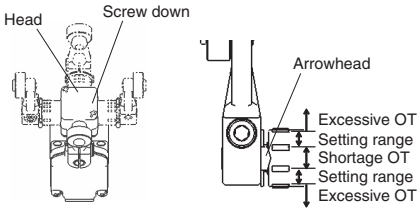

Connectors

- Tighten the connector with the appropriate torque to prevent deformation.
- Use the OMRON type SC connector series, which is prepared separately, suitable for outer diameter of cable and inner diameter of seal rubber.
- Make sure to wrap the connector with the seal tape, except the connector which has O-ring, to keep the sealability.
- To conform to CSA, use a CSA certified water tight treated conduit hub.
- Even when the connector is assembled and set correctly, the end of the cable and the inside of the Switch may come in contact. This can lead to malfunction, leakage current, or fire, so be sure to protect the end of the cable from splashes of oil or water and corrosive gases.

Microload Applications

- The switch contacts can be used both for standard loads and microloads, but once a contact has been used to open and close a load it can no longer be used for lower loads. Doing so will damage the contact surface and reduce contact reliability.
- If an inrush current or other sudden load occurs during a switch operation, the switch will begin to degrade severely which can result in reduced durability.
  Use a contact protection circuit if required.

Indicator

Indicator-equipped switch has contacts and indicator in parallel. When contacts are open, leakage current flows through the indicator circuit and may cause load's malfunction.
Please check the load's OFF current before use the indicatorequipped switch. Leakage current may cause load malfunction (i.e., the load may remain ON). Make sure that the load operating current is higher than the leakage current.
For countermeasures, refer to technical support on your OMRON website.

Terminal Plate

- By using the Terminal Plate (sold separately), as shown in the following diagram, the Switch can be used as a single-polarity double-break switch.

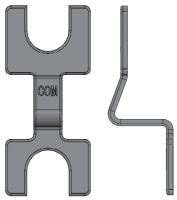

Terminal Plate

Attach the Terminal Plate so that the "COM" mark is oriented as shown on the left.

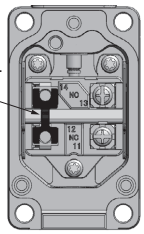

Terminal Plate Mounting Diagram (with Two Terminal Screws Removed)

Model	WL-N TERMINAL PLATE

Using a WL□-2N Switch Mounted from the Side

If you replace a previous Switch with a WL□-2N-N Switch, a Mounting Plate (sold separately) is available to maintain mounting compatibility. If you use the Mounting Plate, the Switch mounting holes and actuator position will be compatible. (The position of the dog will not need to be changed.)

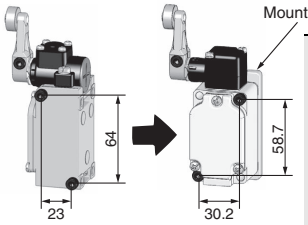

Set contents	Plate (1)	Plate mounting bolts (2) Switch mounting bolts (2)
Model	WLN-P001	

Operation

- Carefully determine the position and shape of the dog or cam so that the actuator will not abruptly snap back, thus causing shock. In order to operate the Limit Switch at a comparatively high speed, use a dog or cam that keeps the Limit Switch turned ON for a sufficient time so that the relay or valve will be sufficiently energized.
- The method of operation, the shape of the cam or dog, the operating frequency, and the travel after operation have a large influence on the durability and operating accuracy of the Limit Switch. The cam or dog must be smooth in shape.

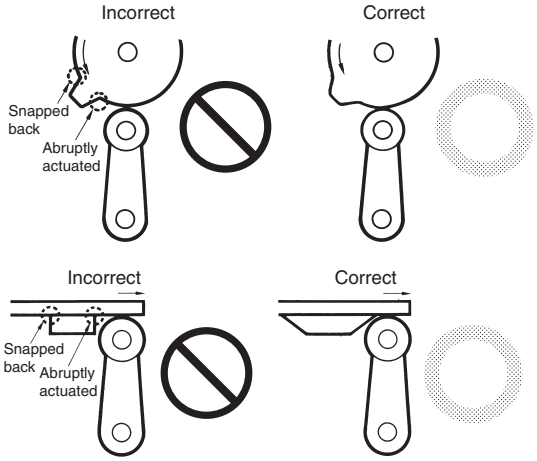

- Appropriate force must be imposed on the actuator by the cam or dog in both rotary operation and linear operation.
  If the dog touches the lever as shown below, the operating position will not be stable.

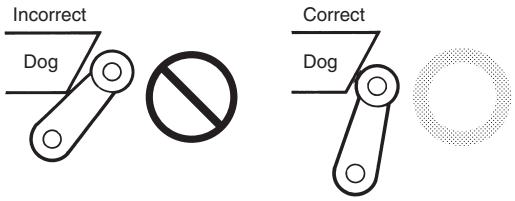

- Unbalanced force must not be imposed on the actuator. Otherwise, wear and tear on the actuator may result.

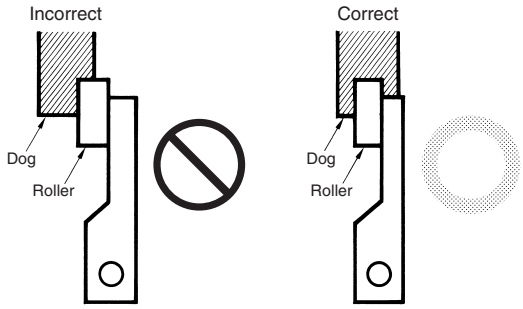

- With a roller actuator, the dog must touch the actuator at a right angle. The actuator or shaft may deform or break if the dog touches the actuator (roller) at an oblique angle.

- Make sure that the actuator does not exceed the OT (overtravel) range, otherwise the Limit Switch may malfunction. When mounting the Limit Switch, be sure to adjust the Limit Switch carefully while considering the whole movement of the actuator.

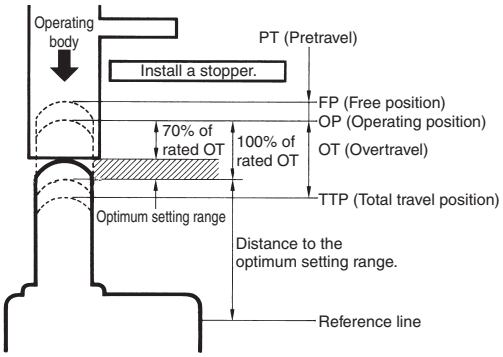

- The Limit Switch may soon malfunction if the OT is excessive. Therefore, adjustments and careful consideration of the position of the Limit Switch and the expected OT of the operating body are necessary when mounting the Limit Switch.

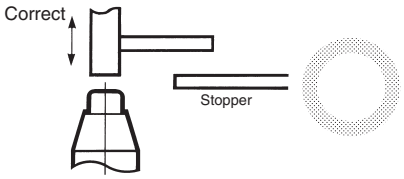

- When using a pin-plunger actuator, make sure that the stroke of the actuator and the movement of the dog are located along a single straight line.

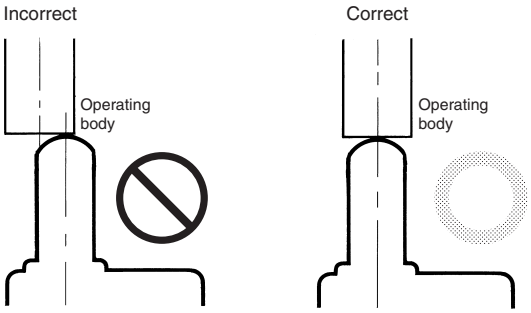

Others

- For long term (over a year) storage, check according to Operating characteristics, Contact resistance and Dielectric strength at least. And check with using condition.
- The durability of the Switch is greatly affected by operating conditions.
  Evaluate the Switch under actual working conditions before permanent installation and use the Switch within a number of switching operations that will not adversely affect the SwitchÅfs performance.

Using the Switches

Item	Applicable models and Actuators	Details
Changing the Installation Position of the Actuator By loosening the Allen-head bolt on the actuator lever, the position of the actuator can be set anywhere within the 360°. With Indicator-equipped Switches, the actuator lever comes in contact with the top of the indicator cover, so use caution when rotating and setting the lever. When the lever only moves forwards and backwards, it will not contact the lamp cover. (This does not apply to Long-life Switches.)	Roller Levers: (WLCA2-N, WLCA2-2-N, WLCA2-2N-N, WLG2-N, WLCA2-7-N, WLCA2-8-N, WLGCA2-N, WLMCA2-N, WLMG2-N, WLMGCA2-N) Adjustable Roller Levers: (WLCA12-N, WLCA12-2-N, WLCA12-2N-N, WLG12-N) Adjustable rod lever: (WLCL-N, WLCL-2-N, WLCL-2N-N, WLGL-N, WLCAL4-N, WLCAL5-N)	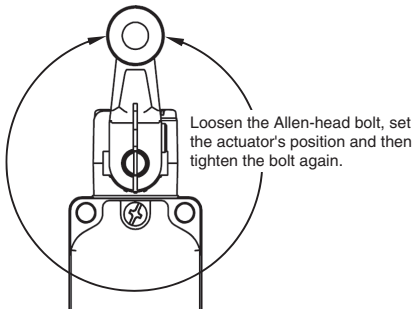
Changing the Orientation of the Head By removing the two screws of the Head, the Head can be set in any of the four directions. Be sure to change the plunger for internal operations at the same time. The roller plunger can be set in either of two positions at 90°	Roller Levers: (WLCA2-N, WLCA2-2-N, WLCA2-2N-N, WLG2-N, WLCA2-7-N, WLCA2-8-N, WLGCA2-N, WLMCA2-N, WLMG2-N, WLMGCA2-N) Adjustable Roller Levers: (WLCA12-N, WLCA12-2-N, WLCA12-2N-N, WLG12-N) Adjustable rod lever: (WLCL-N, WLCL-2-N, WLCL-2N-N, WLGL-N, WLCAL4-N, WLCAL5-N) Horizontal plunger (WLSD□-N) Sealed top-roller plunger (WLD28-N) **Note:** Does not include the -RP60 Series or -141 Series.	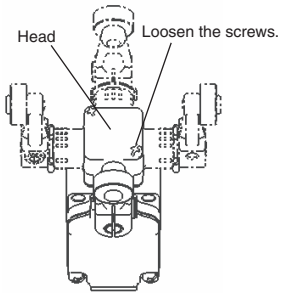
Changing the Operating Direction By removing the Head on models which can operate on one-side only, and then changing the direction of the operational plunger, one of three operating directions can be selected.	Roller Levers: (WLCA2-N, WLCA2-2-N, WLCA2-2N-N, WLG2-N, WLCA2-7-N, WLCA2-8-N, WLGCA2-N, WLMCA2-N, WLMG2-N, WLMGCA2-N) Adjustable Roller Levers: (WLCA12-N, WLCA12-2-N, WLCA12-2N-N, WLG12-N) Adjustable rod lever: (WLCL-N, WLCL-2-N, WLCL-2N-N, WLGL-N, WLCAL4-N, WLCAL5-N)	The output of the Switch will be changed, regardless of which direction the lever is pushed. The output of the Switch will only be changed when the lever is pushed in one direction. 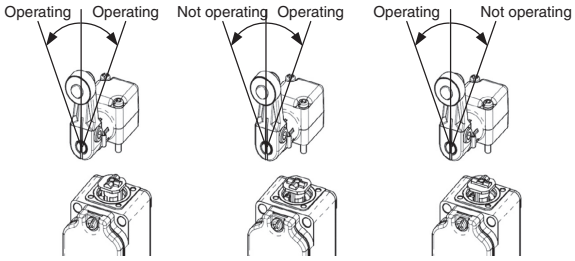 Operation in both directions Clockwise operation Counterclockwise operation
Installing the Roller on the Inside By installing the roller lever in the opposite direction, the roller can be installed on the inside. (Set so that operation can be completed within a 180° level range.)	Roller Levers: (WLCA2-N, WLCA2-2-N, WLCA2-2N-N, WLG2-N, WLCA2-7-N, WLCA2-8-N, WLGCA2-N, WLMCA2-N, WLMG2-N, WLMGCA2-N) Fork lever lock: (WLCA32-4□-N) **Note:** Except for Switches with variable roller levers.	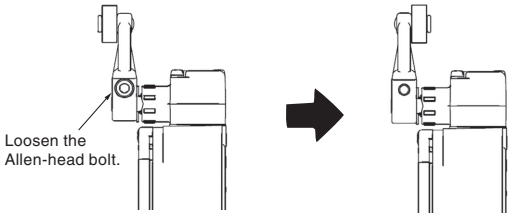

Item	Applicable models and Actuators	Details
Adjusting the Length of the Rod or Lever The length of the rod or lever can be adjusted by loosening the Allen-head bolt.	Adjustable Roller Levers: (WLCA12-N, WLCA12-2-N, WLCA12-2N-N, WLG12-N) Adjustable rod lever: (WLCL-N, WLCL-2-N, WLCL-2N-N, WLGL-N, WLCAL4-N)	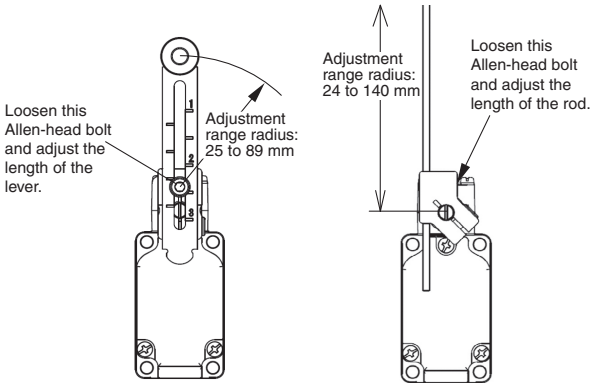 **Adjustable Roller Levers:** **Adjustable Rod Levers:**
Selecting the Roller Position There are four types of Switches with Fork Lever Locks for use depending on the roller position.	Fork lever lock: (WLCA32-4□-N)	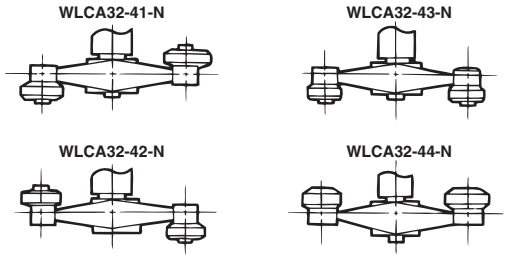 An explanation of the operation of fork lever locks is provided after this table.

Operation of Fork Lever Locks

A Switch with a Fork Lever Lock is constructed so that the dog pushes the lever to invert the output and this inverted state is maintained even after the dog moves on.
If the dog then pushes the lever from the opposite direction, the lever will return to its original position.

Example

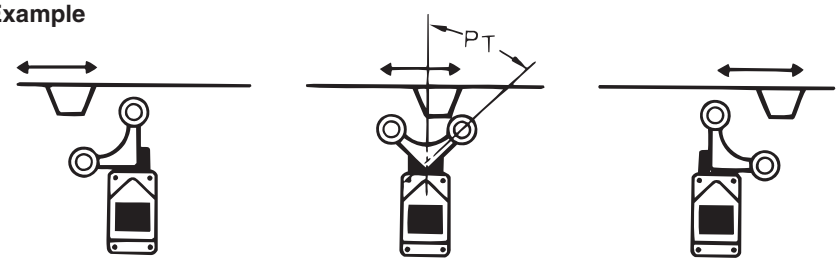

NC terminal: ON **NO terminal: ON** **NO terminal: ON**

Limit Switch Connectors

Connectors (SC Series)

Cabtire cables and flexible tubes with various diameters are used to connect machine tools and controllers with Limit Switches. To ensure the watertightness of the edges of the conduits, use an SC Connector that is suitable for the external diameter of cable and model of Limit Switch.

Ordering Information

Connector for Cabtire Cable

Conduit	Applicable cable	Inner diameter (D) of seal rubber	External diameter of cable		Model	Applicable model
			Min.	Max.		
JIS B 0202 G½	Cabtire cable (general-purpose)	7 mm	5.5 mm	7.5 mm	**SC-1M**	WL-N, D4A-□N, D4B-□N, ZE, ZV, ZV2, XE, XV, XV2
		9 mm	7.5 mm	9.5 mm	**SC-2M**	
		12.5 mm	11 mm	13 mm	**SC-3M**	
		14 mm	12 mm	14 mm	**SC-4M**	
		11 mm	9 mm	11 mm	**SC-5M**	
	Cabtire cable (anti-corrosive)	7 mm	5.5 mm	7.5 mm	**SC-21**	
		9 mm	7.5 mm	9.5 mm	**SC-22**	
		12.5 mm	11 mm	13 mm	**SC-23**	
		14 mm	12 mm	14 mm	**SC-24**	
		11 mm	9 mm	11 mm	**SC-25**	
½-14NPT	Cabtire cable	7 mm	5.5 mm	7.5 mm	**SC-1PT**	D4A-□N
		9 mm	7.5 mm	9.5 mm	**SC-2PT**	
		12.5 mm	11 mm	13 mm	**SC-3PT**	
		14 mm	12 mm	14 mm	**SC-4PT**	
		11 mm	9 mm	11 mm	**SC-5PT**	

Note: Please use sealling tape with SC Connectors. SC-1M to SC-5M, however, are provided with an O-ring (NBR) and therefore sealing tape is not necessary to ensure a proper seal.

Simple Connectors (Not Suitable for Locations Subject to Oil or Water)

Conduit	Applicable cable	Inner diameter (D) of seal rubber	External diameter of cable		Model	Applicable model
			Min.	Max.		
JIS B 0202 G½	Cabtire cable	10.6 mm	8.5 mm	10.5 mm	**SC-P2**	WL-N, D4A-□N, D4B-□N, ZE, ZV, ZV2, XE, XV, XV2
Pg13.5		9.6 mm	7.5 mm	9.5 mm	**SC-P3**	WL□-G-N
JIS B 0202 G½		9 mm	7.5 mm	9 mm	**SC-6**	WL-N, D4A-□N, D4N *, D4N-□R *, D4B-□N, ZE, ZV, ZV2, XE, XV, XV2

Note: Simple connector are made of resin. If more sealing capability is required, use one of SC-1M to SC-5M, which have metal casings.
Models marked with an asterisk (*) however, can only be used with resin connectors.

Dimensions and Structure

(Unit: mm)

Connectors for Cabtire Cable

As for models without an O-ring, please use sealing tape with SC Connectors.

Metal Models without O-ring
G½
SC-21 to 25

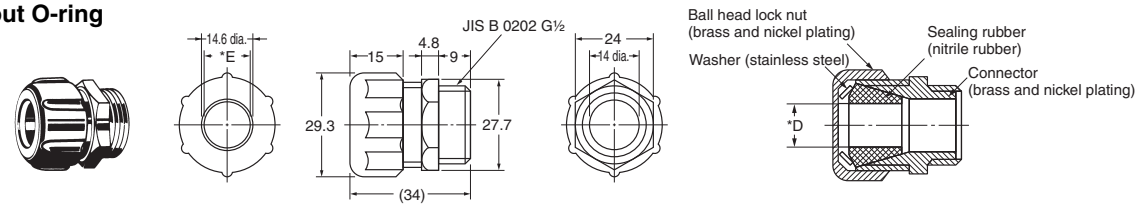

Metal Models with O-ring
G½
SC-1M to 5M

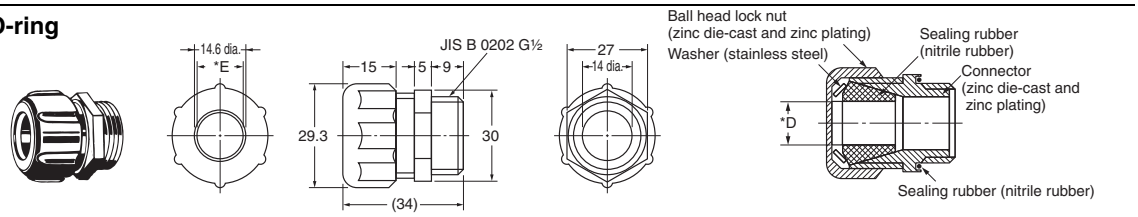

Metal Models without O-ring
½-14NPT
(U.S.-standard screws)
SC-1PT to 5PT

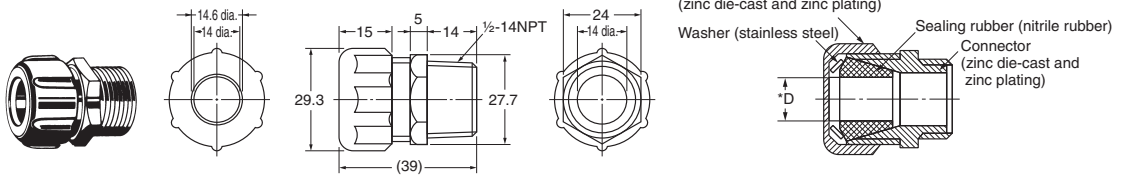

Note: Dimensions not shown in the above diagrams have a variation of ±0.4 mm.

Simple Connectors (Not Suitable for Locations Subject to Oil or Water)

Resin Models
G½
SC-P2

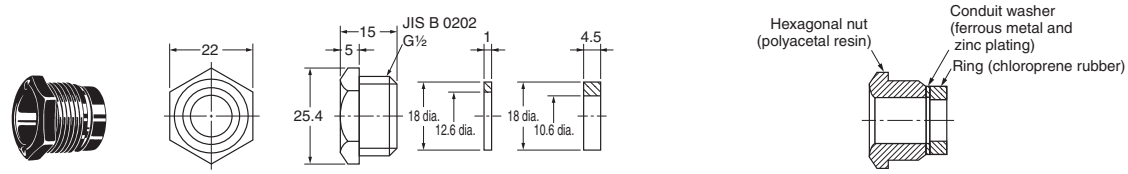

Resin Models
Pg13.5
SC-P3

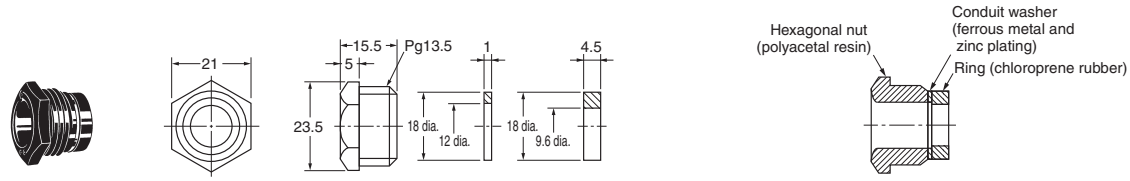

Resin Models
G½
SC-6

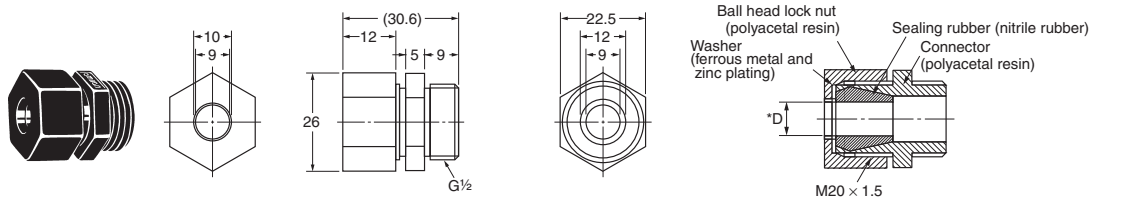

Note: Dimensions not shown in the above diagrams have a variation of ±0.4 mm.

* Diameter of Part Marked with Asterisk

Model	Inner diameter (D) of sealed rubber	Internal diameter (E) of washer	Applicable cable
SC-21, -1M, -1PT	7 mm	10.4 mm	5.5 to 7.5-mm dia.
SC-22, -2M, -2PT	9 mm	13.2 mm	7.5 to 9.5-mm dia.
SC-23, -3M, -3PT	12.5 mm	14.6 mm	11 to 13-mm dia.
SC-24, -4M, 4PT	14 mm	14.6 mm	12 to 14-mm dia.
SC-25, -5M, -5PT	11 mm	13.2 mm	9 to 11-mm dia.
SC-6	9 mm	10 mm	7.5 to 9-mm dia.

Terms and Conditions Agreement

Read and understand this catalog.

Please read and understand this catalog before purchasing the products. Please consult your OMRON representative if you have any questions or comments.

Warranties.

(a) Exclusive Warranty. Omron's exclusive warranty is that the Products will be free from defects in materials and workmanship for a period of twelve months from the date of sale by Omron (or such other period expressed in writing by Omron). Omron disclaims all other warranties, express or implied.

(b) Limitations. OMRON MAKES NO WARRANTY OR REPRESENTATION, EXPRESS OR IMPLIED, ABOUT NON-INFRINGEMENT, MERCHANTABILITY OR FITNESS FOR A PARTICULAR PURPOSE OF THE PRODUCTS. BUYER ACKNOWLEDGES THAT IT ALONE HAS DETERMINED THAT THE PRODUCTS WILL SUITABLY MEET THE REQUIREMENTS OF THEIR INTENDED USE.

Omron further disclaims all warranties and responsibility of any type for claims or expenses based on infringement by the Products or otherwise of any intellectual property right. (c) Buyer Remedy. Omron's sole obligation hereunder shall be, at Omron's election, to (i) replace (in the form originally shipped with Buyer responsible for labor charges for removal or replacement thereof) the non-complying Product, (ii) repair the non-complying Product, or (iii) repay or credit Buyer an amount equal to the purchase price of the non-complying Product; provided that in no event shall Omron be responsible for warranty, repair, indemnity or any other claims or expenses regarding the Products unless Omron's analysis confirms that the Products were properly handled, stored, installed and maintained and not subject to contamination, abuse, misuse or inappropriate modification. Return of any Products by Buyer must be approved in writing by Omron before shipment. Omron Companies shall not be liable for the suitability or unsuitability or the results from the use of Products in combination with any electrical or electronic components, circuits, system assemblies or any other materials or substances or environments. Any advice, recommendations or information given orally or in writing, are not to be construed as an amendment or addition to the above warranty.

See http://www.omron.com/global/ or contact your Omron representative for published information.

Limitation on Liability; Etc.

OMRON COMPANIES SHALL NOT BE LIABLE FOR SPECIAL, INDIRECT, INCIDENTAL, OR CONSEQUENTIAL DAMAGES, LOSS OF PROFITS OR PRODUCTION OR COMMERCIAL LOSS IN ANY WAY CONNECTED WITH THE PRODUCTS, WHETHER SUCH CLAIM IS BASED IN CONTRACT, WARRANTY, NEGLIGENCE OR STRICT LIABILITY.

Further, in no event shall liability of Omron Companies exceed the individual price of the Product on which liability is asserted.

Suitability of Use.

Omron Companies shall not be responsible for conformity with any standards, codes or regulations which apply to the combination of the Product in the Buyer's application or use of the Product. At Buyer's request, Omron will provide applicable third party certification documents identifying ratings and limitations of use which apply to the Product. This information by itself is not sufficient for a complete determination of the suitability of the Product in combination with the end product, machine, system, or other application or use. Buyer shall be solely responsible for determining appropriateness of the particular Product with respect to Buyer's application, product or system. Buyer shall take application responsibility in all cases.

NEVER USE THE PRODUCT FOR AN APPLICATION INVOLVING SERIOUS RISK TO LIFE OR PROPERTY OR IN LARGE QUANTITIES WITHOUT ENSURING THAT THE SYSTEM AS A WHOLE HAS BEEN DESIGNED TO ADDRESS THE RISKS, AND THAT THE OMRON PRODUCT(S) IS PROPERLY RATED AND INSTALLED FOR THE INTENDED USE WITHIN THE OVERALL EQUIPMENT OR SYSTEM.

Programmable Products.

Omron Companies shall not be responsible for the user's programming of a programmable Product, or any consequence thereof.

Performance Data.

Data presented in Omron Company websites, catalogs and other materials is provided as a guide for the user in determining suitability and does not constitute a warranty. It may represent the result of Omron's test conditions, and the user must correlate it to actual application requirements. Actual performance is subject to the Omron's Warranty and Limitations of Liability.

Change in Specifications.

Product specifications and accessories may be changed at any time based on improvements and other reasons. It is our practice to change part numbers when published ratings or features are changed, or when significant construction changes are made. However, some specifications of the Product may be changed without any notice. When in doubt, special part numbers may be assigned to fix or establish key specifications for your application. Please consult with your Omron's representative at any time to confirm actual specifications of purchased Product.

Errors and Omissions.

Information presented by Omron Companies has been checked and is believed to be accurate; however, no responsibility is assumed for clerical, typographical or proofreading errors or omissions.

OMRON Corporation **Industrial Automation Company**
Tokyo, JAPAN
Contact: www.ia.omron.com

Regional Headquarters
OMRON EUROPE B.V.
Wegalaan 67-69, 2132 JD Hoofddorp
The Netherlands
Tel: (31)2356-81-300/Fax: (31)2356-81-388

OMRON ELECTRONICS LLC
2895 Greenspoint Parkway, Suite 200
Hoffman Estates, IL 60169 U.S.A
Tel: (1) 847-843-7900/Fax: (1) 847-843-7787

OMRON ASIA PACIFIC PTE. LTD.
No. 438A Alexandra Road # 05-05/08 (Lobby 2),
Alexandra Technopark,
Singapore 119967
Tel: (65) 6835-3011/Fax: (65) 6835-2711

OMRON (CHINA) CO., LTD.
Room 2211, Bank of China Tower,
200 Yin Cheng Zhong Road,
PuDong New Area, Shanghai, 200120, China
Tel: (86) 21-5037-2222/Fax: (86) 21-5037-2200

Authorized Distributor:

© OMRON Corporation 2013-2014 All Rights Reserved.
In the interest of product improvement,
specifications are subject to change without notice.

CSM_2_1_0714 Printed in Japan
Cat. No. C147-E1-02 0714 (1013)