TS971, TS972, TS974

Output rail-to-rail very low noise operational amplifier

Datasheet - production data

SOT23-5

SO8

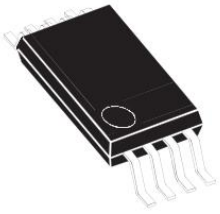

TSSOP8

DFN8 3x3

SO14

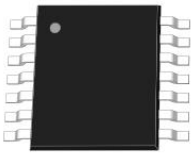

TSSOP14

Features

- Rail-to-rail output voltage swing ±2.4 V at V_{CC} = ±2.5 V
- Very low noise level: 4 nV/√Hz
- Ultra low distortion: 0.003 %
- High dynamic features: 12 MHz, 4 V/µs
- Operating range: 2.7 to 10 V
- ESD protection (2 kV)
- Latch-up immunity (class A)

Applications

- Portable devices (CD players, PDAs)
- Portable communication (cell phones, pagers)
- Instrumentation and sensing technology
- Professional audio circuits

Description

The TS97x family of operational amplifiers operate with voltages as low as ±1.35 V and feature output rail-to-rail signal swing. The TS97x devices are particularly well suited for portable and battery-supplied equipment. Very low noise and low distortion characteristics make them ideal for audio pre-amplification.

The TS97x devices are available in a variety of packages to suit all types of applications. For applications where space saving is critical, the SOT23-5 package (2.8 x 2.9 mm) or the DFN8 package (3 x 3 mm) simplify the board design because they can be placed anywhere on it.

This is information on a product in full production. www.st.com

sales@prom-elec.com / ООО ПРОМЭЛЕКТРОНИКА

Contents

1 Package pin connections 3
2 Absolute maximum ratings and operating conditions 4
3 Electrical characteristics 6
4 Electrical characteristic curves 7
5 Package information 9
5.1 SOT23-5 package information 10
5.2 SO8 package information 11
5.3 TSSOP8 package information 12
5.4 DFN8 3x3 exposed pad package information 13
5.5 SO14 package information 14
5.6 TSSOP14 package information 15
6 Ordering information 16
7 Revision history 17

1 Package pin connections

Figure 1: Package pin connections

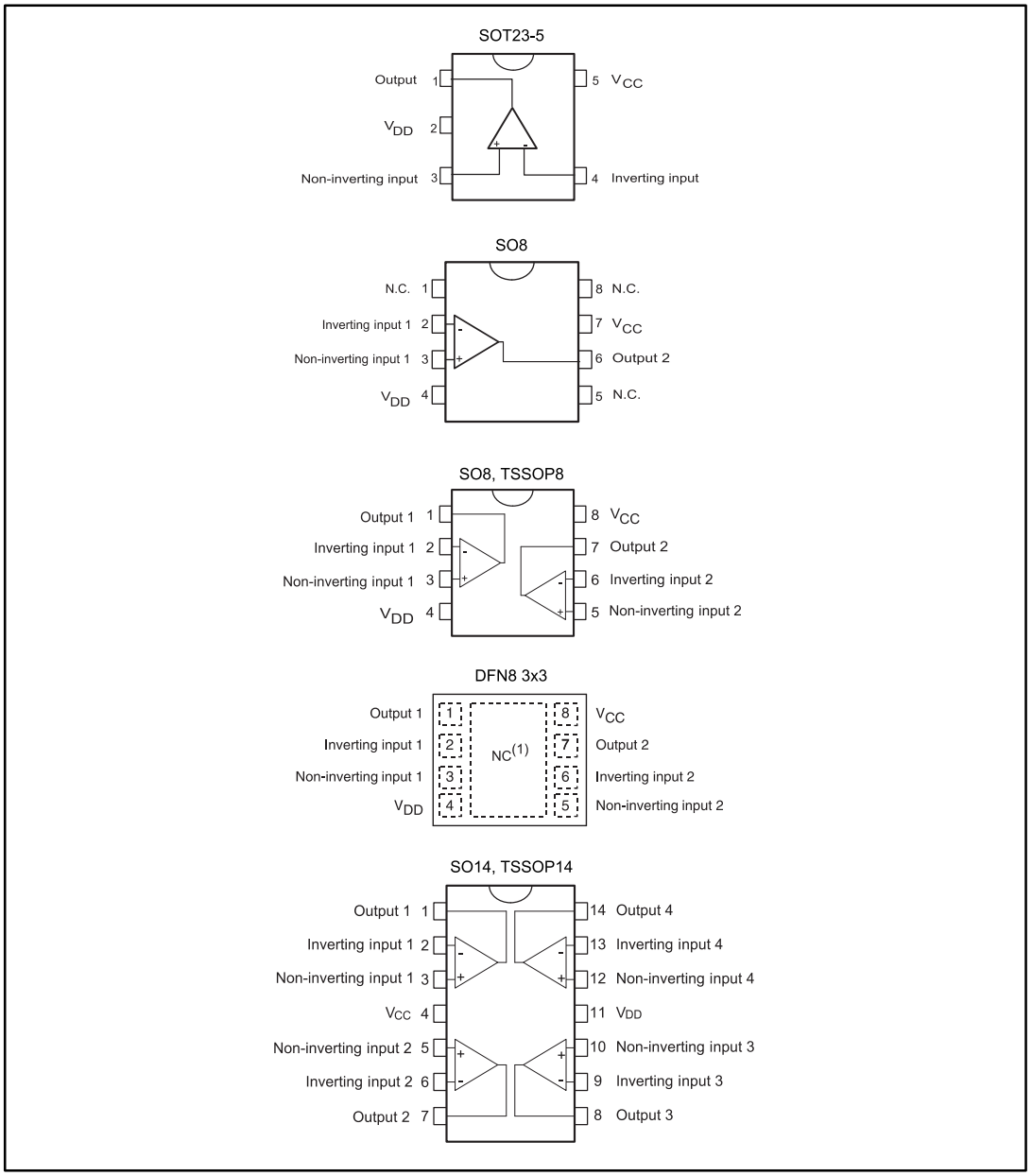

1. The exposed pad of the DFN8 3x3 can be connected to VCC or left floating

2 Absolute maximum ratings and operating conditions

Table 1: Absolute maximum ratings (AMR)

Symbol	Parameter		Value	Unit
V_{CC}	Supply voltage [(1)]		12	V
V_{id}	Differential input voltage [(2)]		±1	
V_{in}	Input voltage [(3)]		V_{DD} - 0.3 to V_{CC} + 0.3	
T_{stg}	Storage temperature range		-65 to 150	°C
T_j	Maximum junction temperature		150	
R_{thja}	Thermal resistance junction-to-ambient [(4)]	SOT23-5	250	°C/W
		SO8	125	
		TSSOP8	120	
		DFN8 3x3	40	
		SO14	105	
		TSSOP14	100	
R_{thjc}	Thermal resistance junction-to-case [(4)]	SOT23-5	81	
		SO8	40	
		TSSOP8	37	
		DFN8 3x3	5.2	
		SO14	31	
		TSSOP14	32	
ESD	HBM: human body model [(5)]		2	kV
	MM: machine model [(6)]		200	V
	CDM: charged device model [(7)] [(8)]		1.5	kV
	Lead temperature (soldering, 10 sec.)		260	°C

Notes:

(1)All voltage values, except the differential voltage are with respect to the network ground terminal.

(2)The differential voltage is the non-inverting input terminal with respect to the inverting input terminal.

(3)The magnitude of input and output voltages must never exceed V_{CC} + 0.3 V.

(4)Short-circuits can cause excessive heating and destructive dissipation. Values are typical.

(5)Human body model: a 100 pF capacitor is charged to the specified voltage, then discharged through a 1.5kΩ resistor between two pins of the device. This is done for all couples of connected pin combinations while the other pins are floating.

(6)Machine model: a 200 pF capacitor is charged to the specified voltage, then discharged directly between two pins of the device with no external series resistor (internal resistor < 5 Ω). This is done for all couples of connected pin combinations while the other pins are floating.

(7) No value specified for CDM on SOT23-5 package.

(8)Charged device model: all pins and package are charged together to the specified voltage and then discharged directly to ground through only one pin. This is done for all pins.

Table 2: Operating conditions

Symbol	Parameter	Value	Unit
V_{CC}	Supply voltage	2.7 to 10	V
V_{icm}	Common mode input voltage range	V_{DD} + 1.15 to V_{CC} - 1.15	
T_{oper}	Operating free air temperature range	-40 to 125	°C

3 Electrical characteristics

Table 3: Electrical characteristics at VCC = 2.5 V, VDD = -2.5 V, Tamb = 25 °C (unless otherwise specified)

Symbol	Parameter	Conditions	Min.	Typ.	Max.	Unit
V_{io}	Input offset voltage			1	5	mV
		$T_{min} \leq T_{amb} \leq T_{max}$			7	
$\Delta V_{io}/\Delta T$	Input offset voltage drift	V_{icm} = 0 V, V_o = 0 V		5		µV/°C
I_{io}	Input offset current	V_{icm} = 0 V, V_o = 0 V		10	150	nA
I_{ib}	Input bias current	V_{icm} = 0 V, V_o = 0 V		200	750	
		$T_{min} \leq T_{amb} \leq T_{max}$		200	1000	
V_{icm}	Common mode input voltage range		-1.35		1.35	V
CMR	Common mode rejection ratio	V_{icm} = ±1.35 V	60	85		dB
SVR	Supply voltage rejection ratio	V_{CC} = ±2 V to ±3 V	60	70		
A_{vd}	Large signal voltage gain	R_L = 2 kΩ	70	80		
V_{OH}	High-level output voltage		2	2.4		V
V_{OL}	Low-level output voltage			-2.4	-2	
I_{source}	Output source current			1.5		mA
I_{sink}	Output sink current			100		
I_{CC}	Supply current per amplifier	Unity gain, no load		2	2.8	
GBP	Gain bandwidth product	f = 100 kHz, R_L = 2 kΩ, C_L = 100 pF	8.5	12		MHz
SR	Slew rate	A_V = 1, V_{in} = ±1 V	2.8	4		V/µs
∅m	Phase margin at unit gain	R_L = 2 kΩ, C_L = 100 pF		60		Degrees
Gm	Gain margin			10		dB
e_n	Equivalent input noise voltage	f = 100 kHz		4		nV/√Hz
i_n	Equivalent input noise current	f = 1 kHz		250		fA/√Hz
THD	Total harmonic distortion	f = 1 kHz, A_V = -1, R_L = 10 kΩ		0.003		%

4 Electrical characteristic curves

Figure 2: Input offset voltage distribution

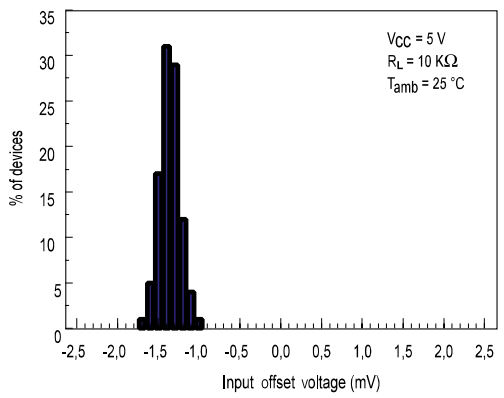

Figure 3: Voltage gain and phase vs. frequency VCC = 5 V

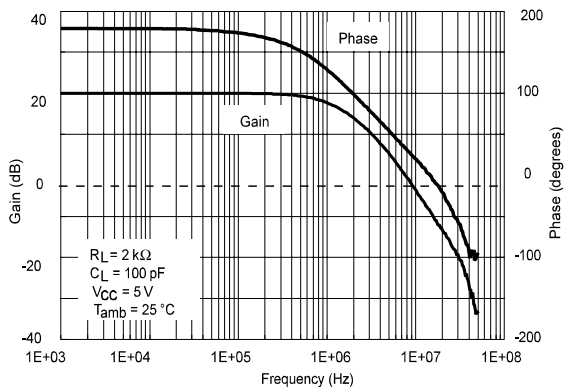

Figure 4: Voltage gain and phase vs. frequency VCC = 2.7 V

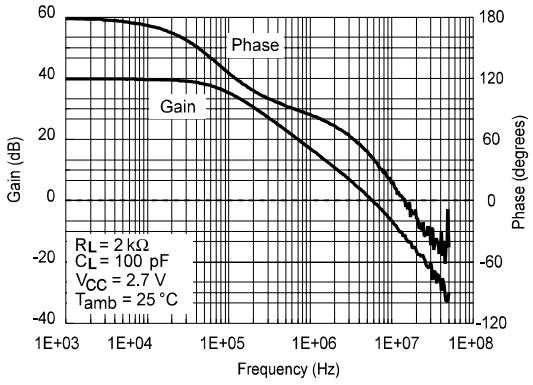

Figure 5: THS vs. Vout, VCC = 5 V

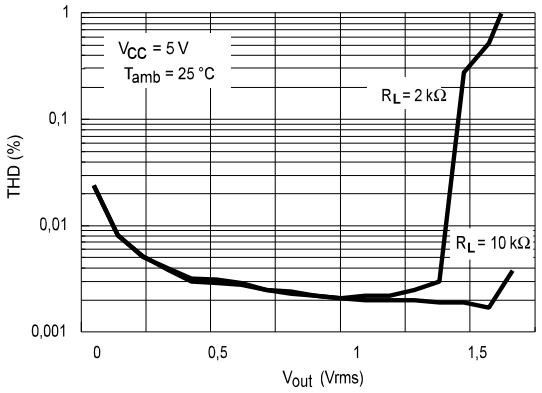

Figure 6: THD vs. Vout, VCC = 2.7 V

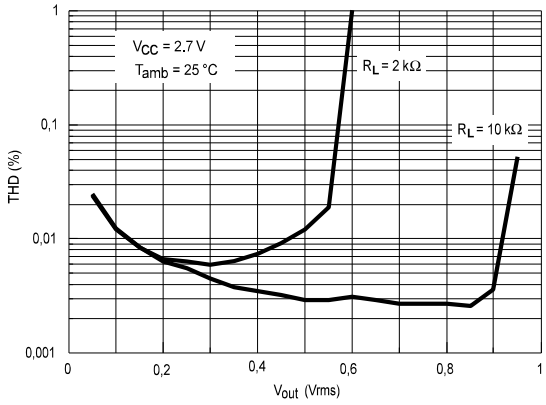

Figure 7: THD vs. frequency

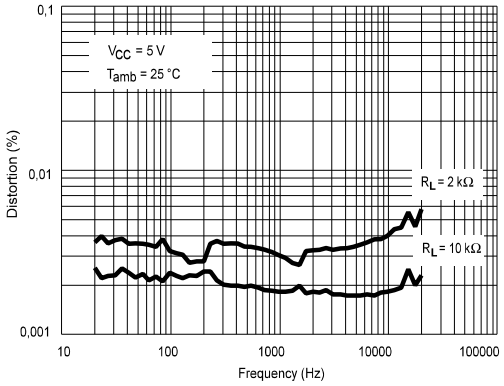

Figure 8: Noise voltage vs. frequency

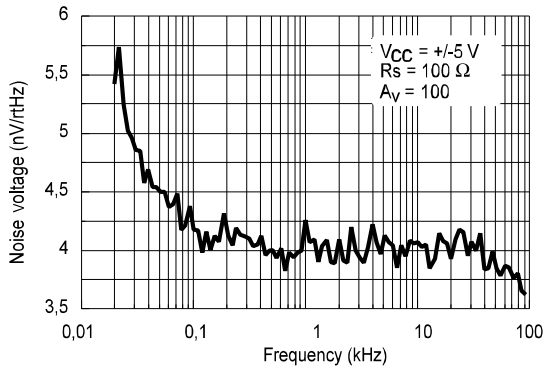

Figure 9: Gain bandwidth product vs. Iout

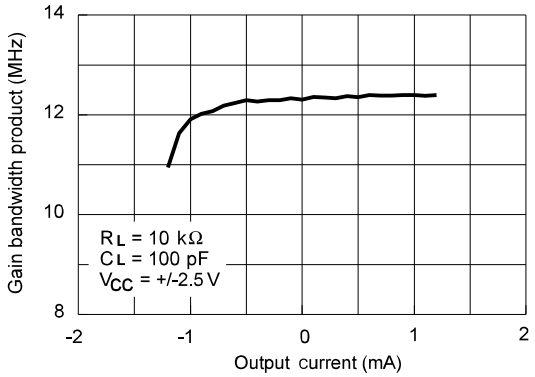

Figure 10: Phase margin vs. Iout

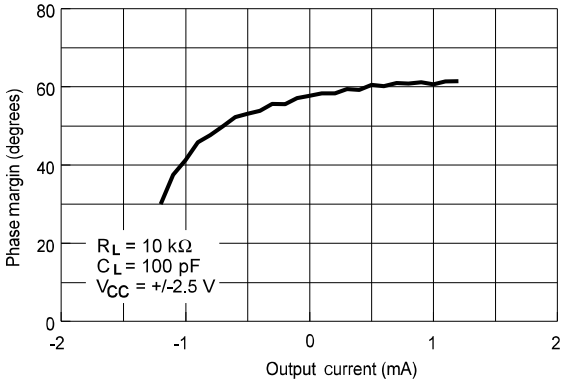

Figure 11: Phase margin vs. VCC RL = 10 kΩ, CL = 30 pF

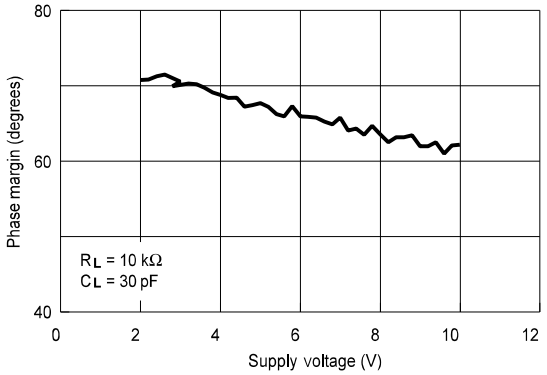

Figure 12: Phase margin vs. VCC CL = 30, 130, and 250 pF

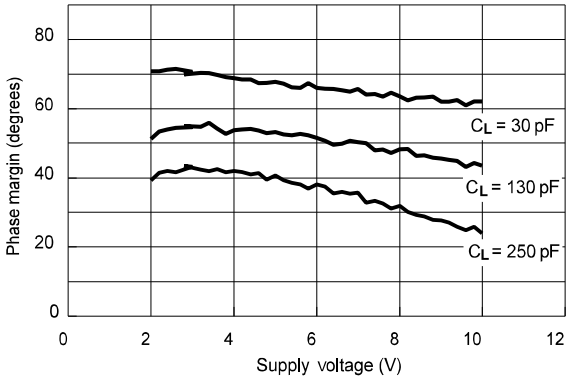

Figure 13: Gain margin vs. VCC

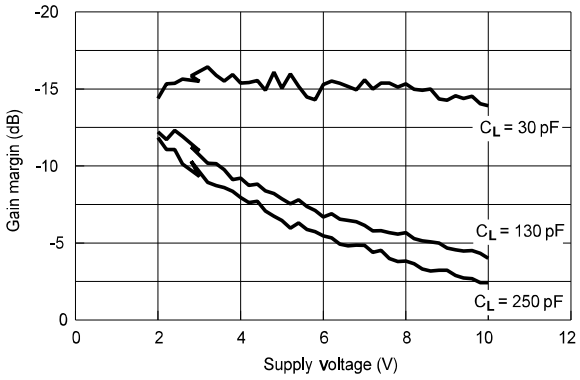

5 Package information

In order to meet environmental requirements, ST offers these devices in different grades of ECOPACK® packages, depending on their level of environmental compliance. ECOPACK® specifications, grade definitions and product status are available at: ***www.st.com***. ECOPACK® is an ST trademark.

5.1 SOT23-5 package information

Figure 14: SOT23-5 package outline

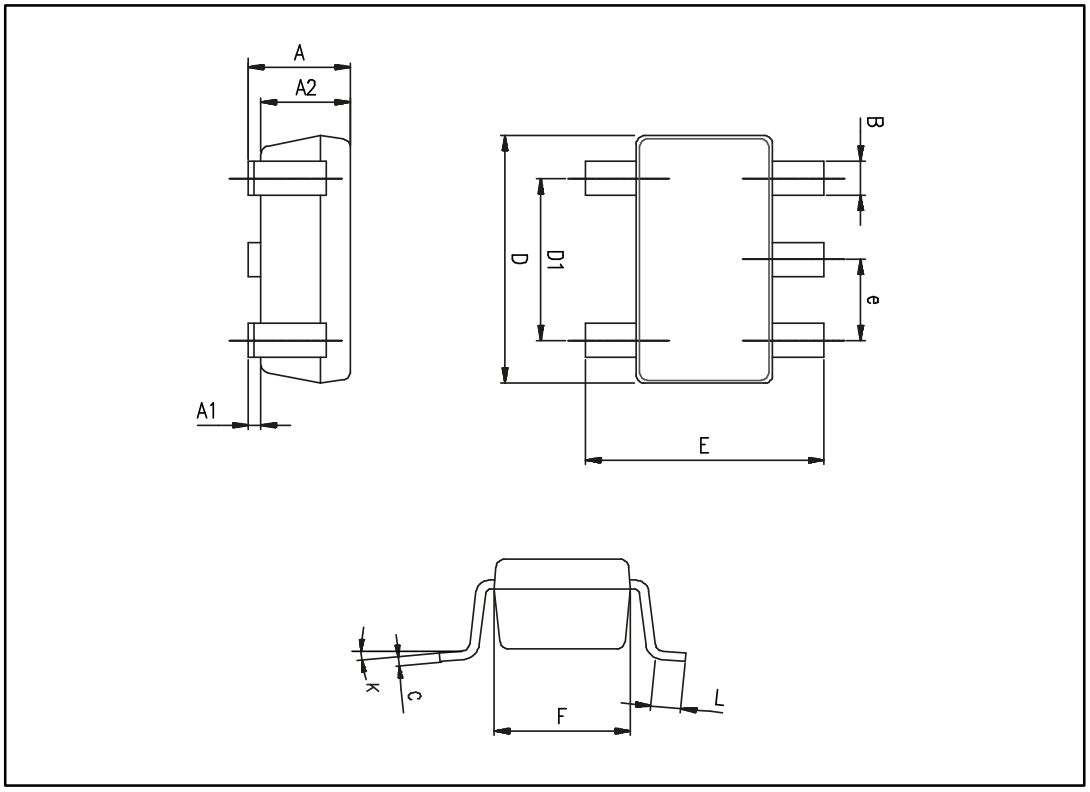

Table 4: SOT23-5 mechanical data

Ref.	Dimensions					
	Millimeters			Inches		
	Min.	Typ.	Max.	Min.	Typ.	Max.
A	0.90	1.20	1.45	0.035	0.047	0.057
A1			0.15			0.006
A2	0.90	1.05	1.30	0.035	0.041	0.051
B	0.35	0.40	0.50	0.014	0.016	0.020
C	0.09	0.15	0.20	0.004	0.006	0.008
D	2.80	2.90	3.00	0.110	0.114	0.118
D1		1.90			0.075	
e		0.95			0.037	
E	2.60	2.80	3.00	0.102	0.110	0.118
F	1.50	1.60	1.75	0.059	0.063	0.069
L	0.10	0.35	0.60	0.004	0.014	0.024
K	0 degrees		10 degrees	0 degrees		10 degrees

5.2 SO8 package information

Figure 15: SO8 package outline

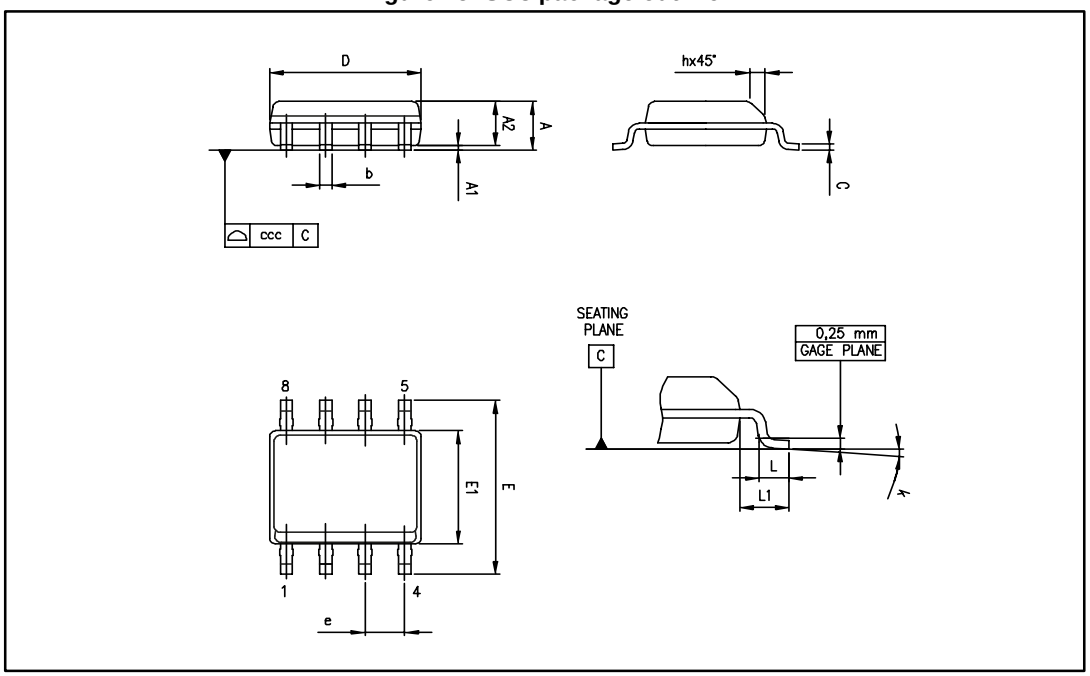

Table 5: SO8 mechanical data

Ref.	Dimensions					
	Millimeters			Inches		
	Min.	Typ.	Max.	Min.	Typ.	Max
A			1.75			0.069
A1	0.10		0.25	0.004		0.010
A2	1.25			0.049		
b	0.28		0.48	0.011		0.019
c	0.17		0.23	0.007		0.010
D	4.80	4.90	5.00	0.189	0.193	0.197
E	5.80	6.00	6.20	0.228	0.236	0.244
E1	3.80	3.90	4.00	0.150	0.154	0.157
e		1.27			0.050	
h	0.25		0.50	0.010		0.020
L	0.40		1.27	0.016		0.050
L1		1.04			0.040	
k	1°		8°	1°		8°
ccc			0.10			0.004

5.3 TSSOP8 package information

Figure 16: TSSOP8 package outline

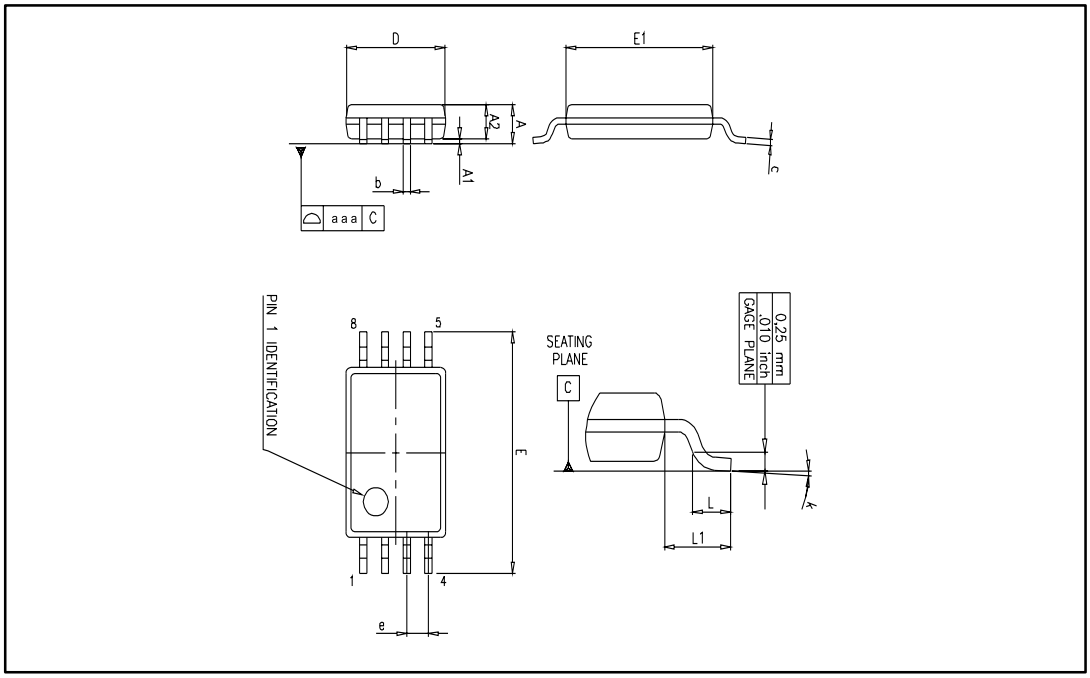

Table 6: TSSOP8 mechanical data

Ref.	Dimensions					
	Millimeters			Inches		
	Min.	Typ.	Max.	Min.	Typ.	Max.
A			1.2			0.047
A1	0.05		0.15	0.002		0.006
A2	0.80	1.00	1.05	0.031	0.039	0.041
b	0.19		0.30	0.007		0.012
c	0.09		0.20	0.004		0.008
D	2.90	3.00	3.10	0.114	0.118	0.122
E	6.20	6.40	6.60	0.244	0.252	0.260
E1	4.30	4.40	4.50	0.169	0.173	0.177
e		0.65			0.0256	
k	0°		8°	0°		8°
L	0.45	0.60	0.75	0.018	0.024	0.030
L1		1			0.039	
aaa		0.1			0.004	

5.4 DFN8 3x3 exposed pad package information

Figure 17: DFN8 3x3 package outline

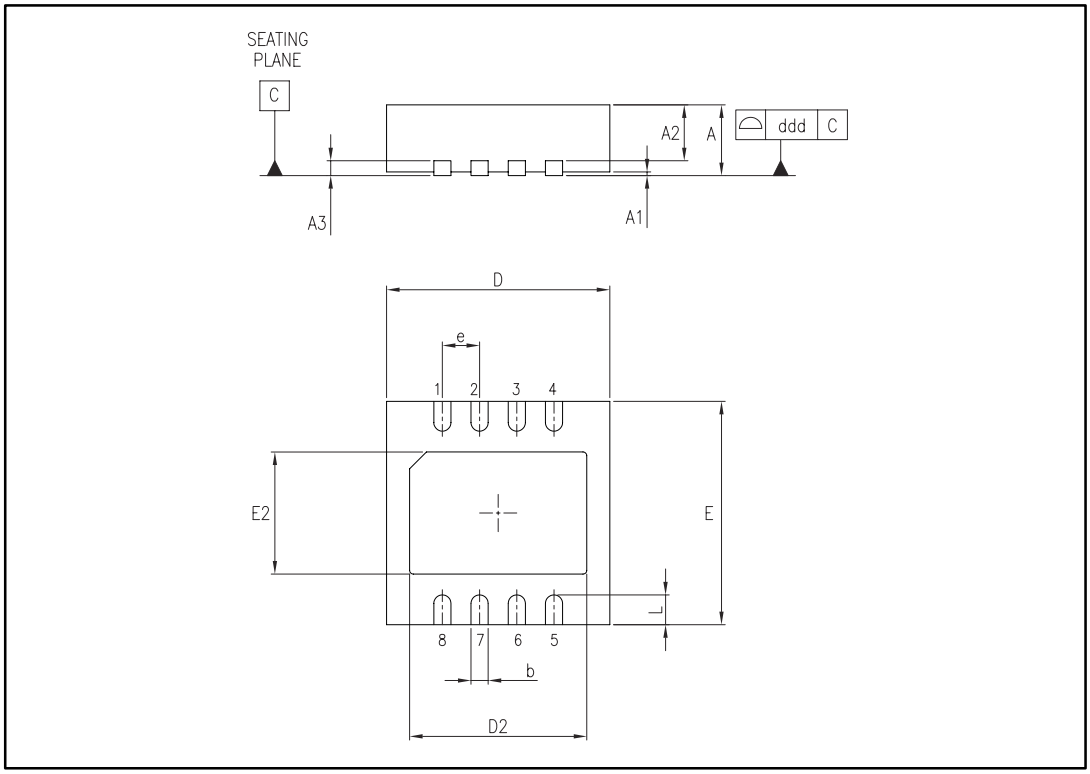

Table 7: DFN8 3x3 mechanical data

Symbol	Dimensions					
	Millimeters			Inches		
	Min.	Typ.	Max.	Min.	Typ.	Max.
A	0.80	0.90	1.00	0.031	0.035	0.039
A1		0.02			0.0008	0.0019
A2	0.55	0.65	0.80	0.021	0.025	0.031
A3		0.20			0.008	
b	0.18	0.25	0.30	0.007	0.010	0.012
D	2.85	3.00	3.15	0.112	0.118	0.124
D2	2.20		2.70	0.087		0.106
E	2.85	3.00	3.15	0.112	0.118	0.124
E2	1.40		1.75	0.055		0.069
e		0.50			0.020	
L	0.30	0.40	0.50	0.012	0.016	0.020
ddd			0.08			0.003

5.5 SO14 package information

Figure 18: SO14 package outline

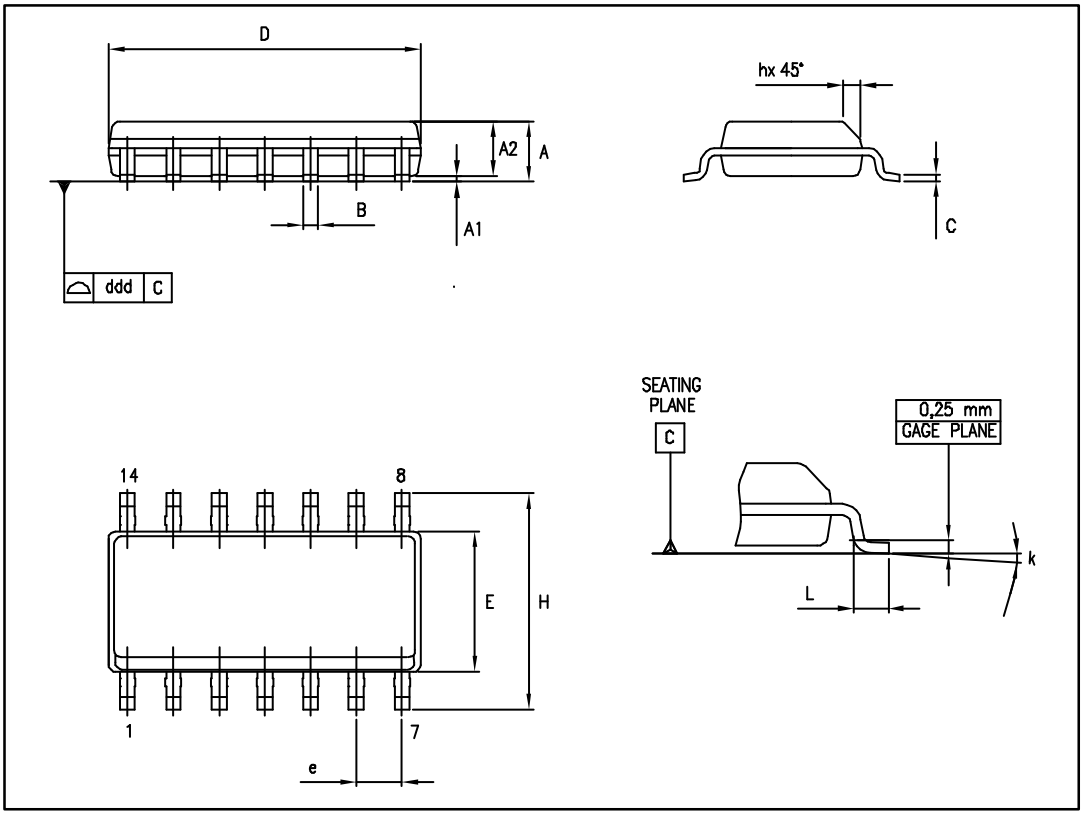

Table 8: SO14 mechanical data

Ref.	Dimensions					
	Millimeters			Inches		
	Min.	Typ.	Max.	Min.	Typ.	Max.
A	1.35		1.75	0.05		0.068
A1	0.10		0.25	0.004		0.009
A2	1.10		1.65	0.04		0.06
B	0.33		0.51	0.01		0.02
C	0.19		0.25	0.007		0.009
D	8.55		8.75	0.33		0.34
E	3.80		4.0	0.15		0.15
e		1.27			0.05	
H	5.80		6.20	0.22		0.24
h	0.25		0.50	0.009		0.02
L	0.40		1.27	0.015		0.05
k	8° (max)					
ddd			0.10			0.004

5.6 TSSOP14 package information

Figure 19: TSSOP14 package outline

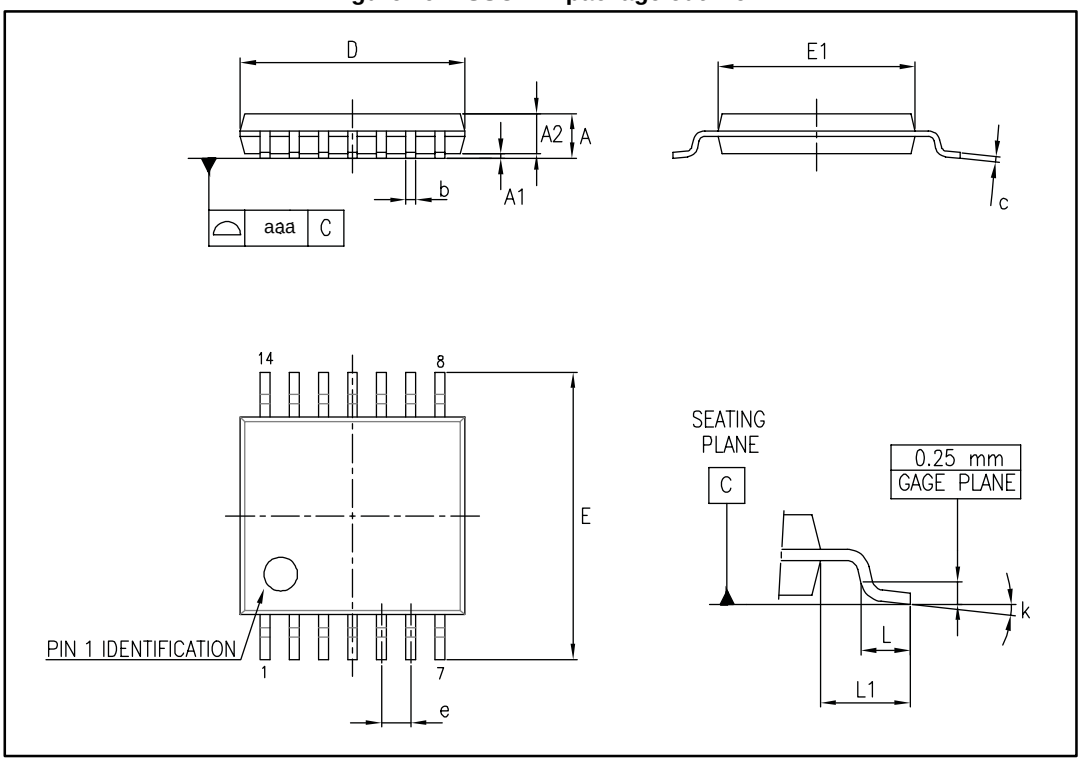

Table 9: TSSOP14 mechanical data

Ref.	Dimensions					
	Millimeters			Inches		
	Min.	Typ.	Max.	Min.	Typ.	Max.
A			1.20			0.047
A1	0.05		0.15	0.002	0.004	0.006
A2	0.80	1.00	1.05	0.031	0.039	0.041
b	0.19		0.30	0.007		0.012
c	0.09		0.20	0.004		0.0089
D	4.90	5.00	5.10	0.193	0.197	0.201
E	6.20	6.40	6.60	0.244	0.252	0.260
E1	4.30	4.40	4.50	0.169	0.173	0.176
e		0.65			0.0256	
L	0.45	0.60	0.75	0.018	0.024	0.030
L1		1.00			0.039	
k	0°		8°	0°		8°
aaa			0.10			0.004

6 Ordering information

Table 10: Order codes

Order code	Temperature range	Package	Packaging	Marking
TS971IDT	-40 °C, 125 °C	SO8	Tape and reel	971I
TS971ILT		SOT23-5		K120
TS971IYLT (1)		SOT23-5 (automotive grade level)		K121
TS972IDT		SO8		972I
TS972IPT		TSSOP8		
TS972IQT		DFN8 3x3		
TS972IYDT (1)		SO8 (automotive grade level)		972IY
TS972IYPT (1)		TSSOP8 (automotive grade level)		972IY
TS972IYQT (1)		DFN8 3x3 (automotive grade level)		972Y
TS974IDT		SO14		974I
TS974IPT		TSSOP14		
TS974IYPT (1)		TSSOP14 (automotive grade level)		974IY

Notes:

(1)Qualified and characterized according to AEC Q100 and Q003 or equivalent, advanced screening according to AEC Q001 and Q 002 or equivalent.

7 Revision history

Table 11: Document revision history

Date	Revision	Changes
15-Nov- 2002	1	First release.
9-May- 2005	2	Modifications on AMR table (explanation of V_{id} and V_i limits)
31-Aug-2005	3	PPAP references inserted in the datasheet, see Table 1 on page 2.
9-Dec-2005	4	Thermal resistance junction to case data added in Table 1. on page 3 Missing PPAP references inserted in the datasheet, see Table 10: Order codes.
3-Oct-2007	5	Added R_{thja} and R_{thjc} values for DIP8 and DIP14 packages in Table 1. ESD footnotes updated in Table 1: Absolute maximum ratings (AMR). Description section updated on cover page. Markings for automotive grade parts corrected in Table 10: Order codes.
20-Dec-2007	6	Reformatted package information in Section 3: Package information. Footnotes for automotive grade parts corrected in Table 10: Order codes.
06-May-2010	7	Updated package information (drawings and data) in Chapter 3. Removed DIP package order codes from Chapter 4: Ordering information.
19-Sep-2012	8	Updated “Pin connection” figure on page 1 (removed part numbers). Removed TS971ID, TS971IYD, TS972ID, TS972IYD, TS974ID and TS974IYD order code from Table 10. Qualified status of TS971IYLT and TS974IYPT order code in Table 10. Minor corrections throughout document.
19-Jul-2013	9	Added footnote regarding NC to the DFN8 3x3 pinout Table 10: Order codes: removed order code TS971IYDT; added automotive qualification to order code TS972IYPT.
07-Mar-2014	10	Table 3: Electrical characteristics at V_{CC} = +2.5 V, V_{DD} = -2.5 V, T_{amb} = 25 °C (unless otherwise specified): added parameter “equivalent input noise current”
24-Jun-2016	11	Added package silhouettes to cover page Removed pinouts to *Section 1: "Package pin connections"* Updated document layout *Table 5*: updated “k” parameter in Millimeters, Min. column. *Table 6*: moved “aaa” parameter to Typ. column instead of Max. column. *Table 7*: removed "0.5" from A1, Millimeters, Max column. *Table 10: "Order codes"*: removed obsolete order code TS974IYDT, added order code TS972IYQT, removed “tube” packaging.

IMPORTANT NOTICE – PLEASE READ CAREFULLY

STMicroelectronics NV and its subsidiaries ("ST") reserve the right to make changes, corrections, enhancements, modifications, and improvements to ST products and/or to this document at any time without notice. Purchasers should obtain the latest relevant information on ST products before placing orders. ST products are sold pursuant to ST's terms and conditions of sale in place at the time of order acknowledgement.

Purchasers are solely responsible for the choice, selection, and use of ST products and ST assumes no liability for application assistance or the design of Purchasers' products.

No license, express or implied, to any intellectual property right is granted by ST herein.

Resale of ST products with provisions different from the information set forth herein shall void any warranty granted by ST for such product.

ST and the ST logo are trademarks of ST. All other product or service names are the property of their respective owners.

Information in this document supersedes and replaces information previously supplied in any prior versions of this document.

© 2016 STMicroelectronics – All rights reserved