600H-600NH series

Toggle switches • high amperage

DISTINCTIVE FEATURES

Robust mechanism
High current/voltage rating
Insulated or metal lever
UL, CSA and NF-VDE (EN 61058-1) approved

ELECTRICAL SPECIFICATIONS

- Max. current/voltage ratings : see tables below
- Peak current : 30 A max. during 1/2 sine, 250 VAC
- Initial contact resistance : 10 mΩ max.
- Insulation resistance : 1,000 MΩ min. at 500 VDC
- Dielectric strength :
  2,000 Vrms 50 Hz min. between terminals
  2,500 Vrms 50 Hz min. between terminals and frame
- Electrical life : 10,000 cycles at full load

APPROVED RATINGS

Models	Functions	600H - 600NH		
		UL	CSA	NF-VDE
		UL 1054	CSA 22-2	EN 61058-1
Single and double pole	ON - OFF (1)	15 A 1/2 HP 125-250 VAC		10(4) A 400 VAC T 85/55 (600H) T 125/55 (600NH)
	ON - ON (6)			
	Other (4-5-7-8-9)	10 A 1/2 HP 125-250 VAC		
Three pole	ON - OFF (1) & ON - ON (6)	15 A 1/2 HP 125-250 VAC		
	Other (4-5-7-8-9)	10 A 1/2 HP 125-250 VAC		

FOR INFORMATION
Max. current/voltage rating w. resistive load

Functions	Ratings	Electrical life
ON - OFF ON - ON	15 A 250 VAC 10 A 24 VDC 15 A 12 VDC	10,000 cycles
ON OFF ON	15 A 250 VAC 5 A 24 VDC	6,000 cycles 10,000 cycles
Other	15 A 125 VAC 12 A 250 VAC 5 A 24 VDC	10,000 cycles

The company reserves the right to change specifications without notice.

sales@prom-elec.com / ООО ПРОМЭЛЕКТРОНИКА

600H-600NH series

Toggle switches • high amperage

GENERAL SPECIFICATIONS

- Torque : 1.50 Nm (1.10 Ft.lb) max. applied to nut
- Panel thickness : 4.5 mm (.177) max. between 2 nuts
- Operating temperature : -20 °C to +55 °C (-4 °F to +131 °F)

MATERIALS

- Case : polyester UL94-V0
- Actuator :
  - 600H : brass, nickel plated
  - 600NH : black polyamide
- Bushing : brass, nickel plated
- Contacts : silver/nickel alloy

APEM products may be recycled at end-of-life for the re-claiming of valuable metal components.

AGENCY APPROVALS

EN 61058-1 EN 61058-1

Availability : see chart on previous page.
Marking : approved models are standard marked.

TERMINALS

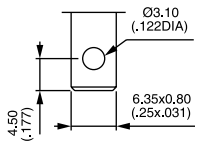

600H/2 & 600NH/2

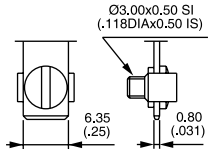

600H & 600NH

ELECTRICAL FUNCTIONS

→ KEYWAY

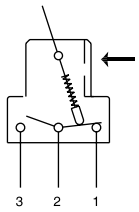

PANEL CUT-OUT

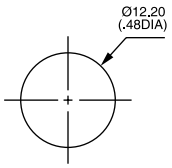

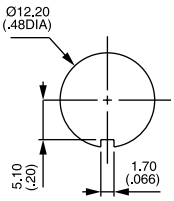

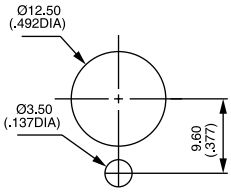

600H-600NH series

Toggle switches • high amperage

BUILD YOUR PART NUMBER

BASIC PART NUMBER

SERIES	NUMBER OF POLES	ELECTRICAL FUNCTIONS	ACTUATOR AND TERMINALS	MOMENTARY
6				

NUMBER OF POLES

3	Single pole
4	Double pole
5	Three pole

For 4 pole, see 660 series.

ELECTRICAL FUNCTIONS

1	ON	-	OFF
5	MOM	-	ON
6	ON	-	ON
7	MOM	OFF	MOM
8	ON	OFF	MOM
9	ON	OFF	ON
4	ON	ON	ON
	ON	ON	MOM △
	MOM	ON	MOM △

△ Must not have blank in "momentary" box.

ACTUATOR AND TERMINALS

H	Metal lever, screw terminals
H/2	Metal lever, solder lug/quick-connect terminals *
H/3	Metal lever, normalized quick-connect terminals
NH	Insulated lever, screw terminals
NH/2	Insulated lever, solder lug/ quick-connect terminals
NH/3	Insulated lever, normalized quick-connect terminals *

* On request.

MOMENTARY

-1R	ON	ON	MOM
-2R	MOM	ON	MOM

OPTIONS
FOR 600H SERIES ONLY

OPTIONS

For models with metal lever only

T	Tropicalized case
K	Front panel sealing
L	Bushing 16 mm (.629)
LUXE	Chrome finish
TKLUXE	Front panel sealing + T and LUXE
G	Black finish
GK	Black finish + front panel sealing
G-038	Black finish + uminous tip on lever

LOCKING LEVERS

-1V	1 locked position
-2V	2 locked positions
-3V	3 locked positions

ACTUATOR OPTIONS

-4	30 mm (1.181) long actuator
-5	40 mm (1.574) long actuator
-6	Retro style actuator
X2595	Ergonomic flat plastic actuator

ABOUT THIS SERIES

On the following pages, you will find successively basic part numbers of switches and options in the same order as in above chart.

Notice : please note that not all combinations of above numbers are available. Refer to following pages for further information.

Switch guards are available to prevent inadvertent lever operation. See "Switch Guards" section on website.

Sealing boots are available on 600H series to protect the switches against dust and water. See "Sealing Boots" section of website.

Mounting accessories : standard hardware supplied with all models :
- 600H and series : 1 hex nut U166 and 1 knurled nut U411
- 600NH series : 1 hex nut U166 and 1 knurled nut U522

600H-600NH series

Toggle switches • high amperage

METAL LEVER - SINGLE POLE

Solder lug	Screw	A	III 2-1	II	I 2-3
631H/2	631H	30° ON	-		OFF
635H/2	635H	26° MOM	-		ON
636H/2	636H	30° ON	-		ON
637H/2	637H	30° MOM	OFF		MOM
638H/2	638H	36° ON	OFF		MOM
639H/2	639H	36° ON	OFF		ON

→ KEYWAY

A = Angle of throw

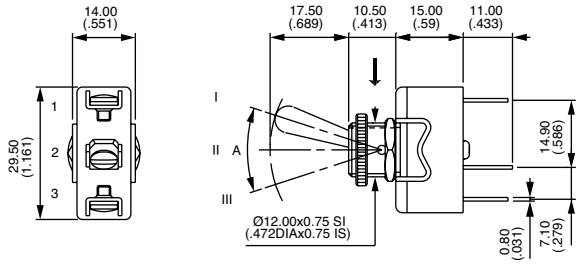

Angle of throw with K sealing option :
functions 1, 5, 6, 7 : 26° - functions 8, 9 : 32°

METAL LEVER - DOUBLE POLE

Solder lug	Screw	A	III 2-1 5-4	II	I 2-3 5-6
641H/2	641H	26° ON	-		OFF
644H/2	644H*	33° ON	ON		ON
644H/2-1R	644H-1R*	33° ON	ON		MOM
644H/2-2R	644H-2R*	33° MOM	ON		MOM
645H/2	645H	26° MOM	-		ON
646H/2	646H	26° ON	-		ON
647H/2	647H	26° MOM	OFF		MOM
648H/2	648H	26° ON	OFF		MOM
649H/2	649H	32° ON	OFF		ON

→ KEYWAY

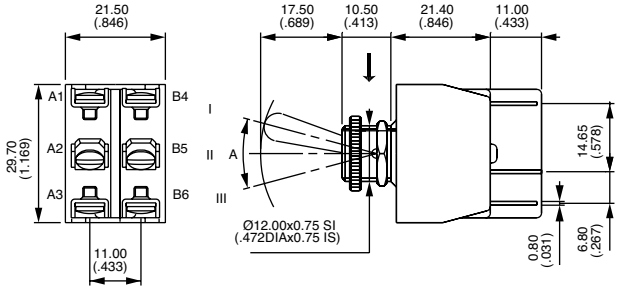

* Function 4 : SP in DP case - see "Technical information" on website

METAL LEVER - THREE POLE

Solder lug	Screw	A	III 2-1 5-4 8-7	II	I 2-3 5-6 8-9
651H/2	651H	24° ON	-		OFF
655H/2	655H	15° MOM	-		ON
656H/2	656H	24° ON	-		ON
657H/2	657H	24° MOM	OFF		MOM
658H/2	658H	24° ON	OFF		MOM
659H/2	659H	28° ON	OFF		ON

→ KEYWAY

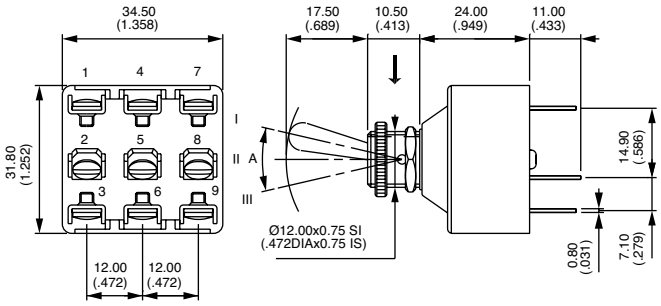

INSULATED LEVER - SINGLE POLE

Solder lug	Screw	A	III 2-1	II	I 2-3
631NH/2	631NH	28° ON	-		OFF
635NH/2	635NH	24° MOM	-		ON
636NH/2	636NH	28° ON	-		ON
637NH/2	637NH	33° MOM	OFF		MOM
638NH/2	638NH	33° ON	OFF		MOM
639NH/2	639NH	33° ON	OFF		ON

→ KEYWAY

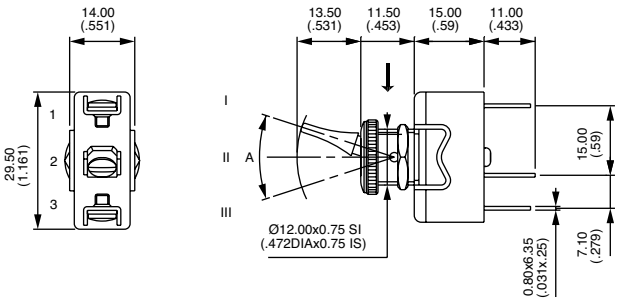

600H-600NH series

Toggle switches • high amperage

INSULATED LEVER - DOUBLE POLE

Solder lug	Screw	A	III 2-1 5-4	II	I 2-3 5-6
641NH/2	641NH	26°	ON	-	OFF
644NH/2	644NH*	30°	ON	ON	ON
644NH/2-1R	644NH-1R*	26°	ON	ON	MOM
644NH/2-2R	644NH-2R*	26°	MOM	ON	MOM
645NH/2	645NH	26°	MOM	-	ON
646NH/2	646NH	26°	ON	-	ON
647NH/2	647NH	26°	MOM	OFF	MOM
648NH/2	648NH	30°	ON	OFF	MOM
649NH/2	649NH	30°	ON	OFF	ON

→ KEYWAY

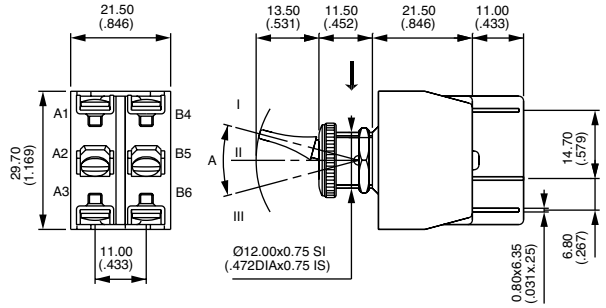

* Function 4 : SP in DP case - see "Technical information" on website

INSULATED LEVER - THREE POLE

Solder lug	Screw	A	III 2-1 5-4 8-7	II	I 2-3 5-6 8-9
651NH/2	651NH	24°	ON	-	OFF
655NH/2	655NH	15°	MOM	-	ON
656NH/2	656NH	24°	ON	-	ON
657NH/2	657NH	24°	MOM	OFF	MOM
658NH/2	658NH	24°	ON	OFF	MOM
659NH/2	659NH	28°	ON	OFF	ON

→ KEYWAY

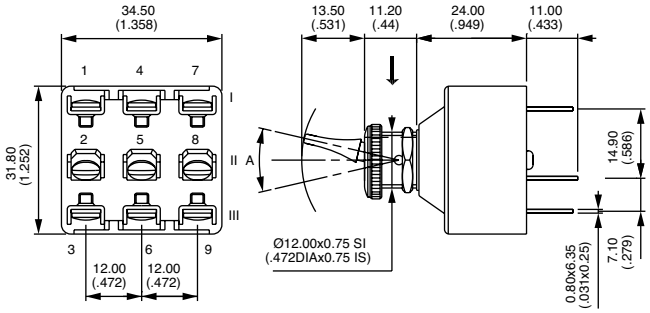

All models also available with normalized quick-connect terminals **H/3** or **NH/3**.

OPTIONS

BASIC P/N

For 600H series only

T	Tropicalized diallylphthalate case (-40 °C to +85 °C) (-40 °F to +185 °F)
K	Front panel sealing by 1 O-ring and sealing washer. Protects the switch against water and dust. Panel seal withstands 1 bar pressure and remains sealed even when switch is operated
L	Special threaded bushing, length 16 mm (.629)
LUXE	Chrome plated lever and cap nut U117
TK LUXE	Options T, K and LUXE.
G	Black finish on bushing, lever and nuts. Includes tropicalization (option T) and locking ring U12.
GK	Option G + front panel sealing by O-ring and sealing washer (as described in option K)
G-038	Option G + fluorescent tip on lever. White fluorescent tip becomes luminous when submitted to ultra violet rays.

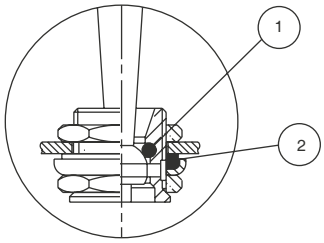

1 O-ring

2 Sealing washer

GK

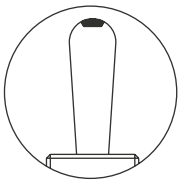

G-38

600H-600NH series

Toggle switches • high amperage

LOCKING LEVERS

BASIC P/N

For 600H series only
For 1 and 2 pole models.
For 3-pole models, refer to 6000 series.

→ KEYWAY

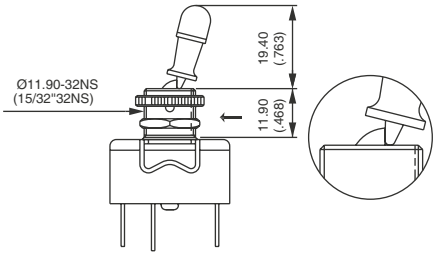

-1V
1 locked position

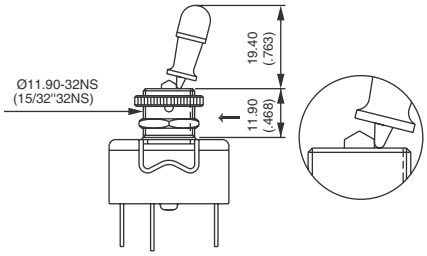

-2V
2 locked positions

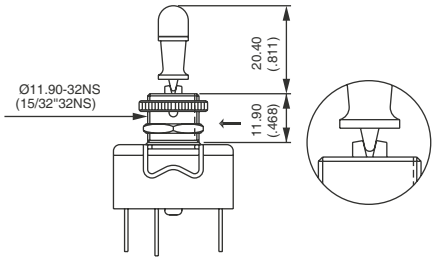

-3V
3 locked positions

ACTUATOR OPTIONS

BASIC P/N

For 600H series only
For 1 and 2 pole models.

-4	30 mm (1.181) long actuator
-5	40 mm (1.574) long actuator
-6	Retro style actuator (gold plated or chrome plated : on request)
X2595	Ergonomic flat plastic actuator

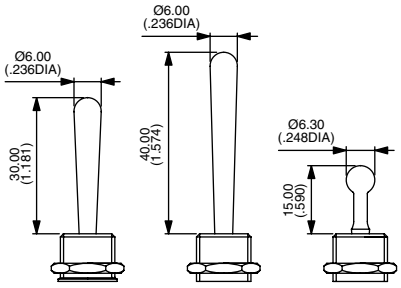

-4 -5 -6

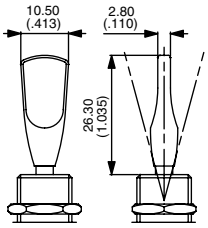

X2595