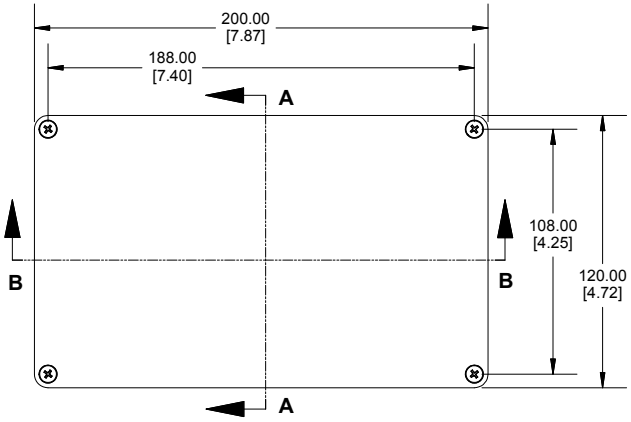


TOP VIEW

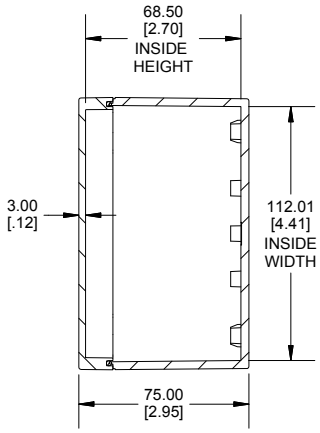


SECTION A-A
END VIEW

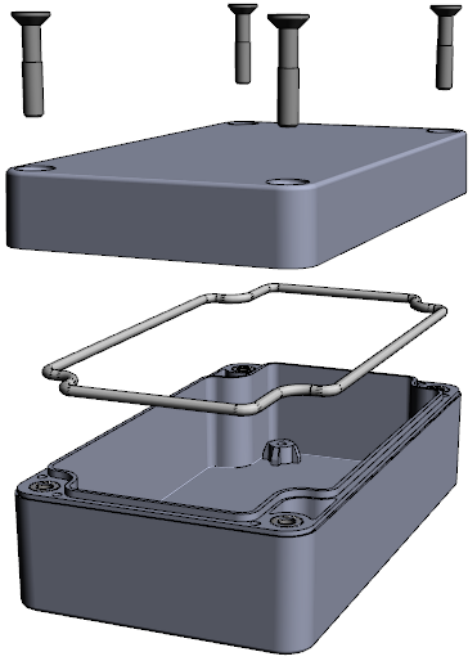

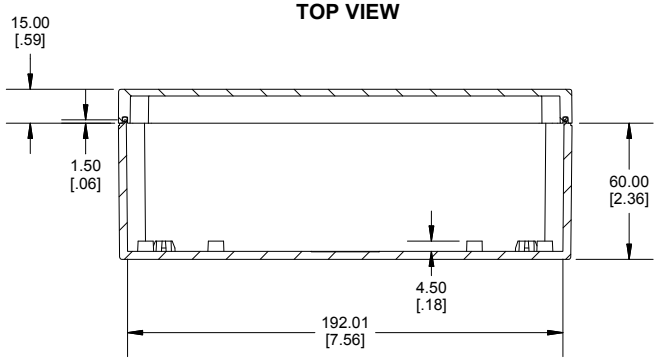


SECTION B-B
SIDE VIEW

Enclosures can be Factory Modified (Milling, Drilling, Printing etc.)
Contact Factory (modshop@hammondmfg.com) for quotes
Solid models of this enclosure available in .stp or .x_t
(Part number and text placement/orientation on our products are subject to change, we do not recommend using them as a locating reference for modification purposes)

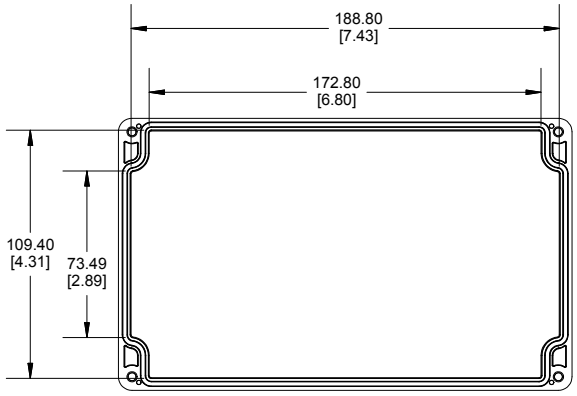


INSIDE LID

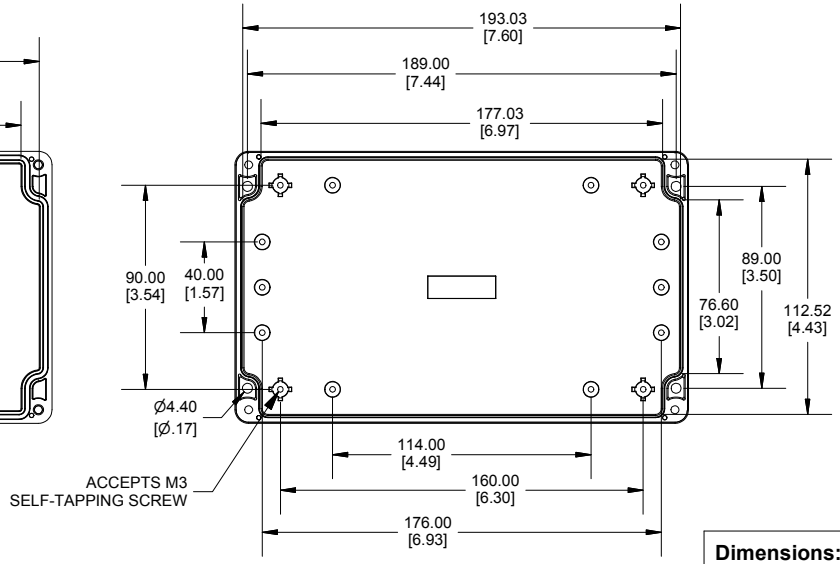


INSIDE BOX

**NOTE**

Purchased assembly includes Box, Lid, String Gasket, 4 PCB screws, and 4 Lid screws.

**Recommended Torque : (43-50) Ozf.in / (30-35) cN.m**

| RZ Enclosure | |
|---|---|
| Polycarbonate Off-White (UL94-V2) | RZ0269 |
| Polycarbonate Off-White with Clear Lid (UL94-V2) | RZ0269C |
| General Purpose ABS Light Grey (UL94 HB) | RZ0373 |
| General Purpose ABS Light Grey with Polycarbonate Clear Lid (UL94 HB) | RZ0373C |
| **ACCESSORIES** | |
| Cover Screw (M4-0.7 X 20mm) (50 Pkg) | SC618-50 |
| PCB Screw Self Tapping (M3 X 6mm) (50 Pkg) | SC622-50 |
| String Gasket EPDM Grey (2 Pkg) | RZ0373GASKET |

**Dimensions:**
mm
[inches]

HAMMOND MANUFACTURING®

RZ0269 (0373)

**www.hammondmfg.com**

sales@prom-elec.com / ООО ПРОМЭЛЕКТРОНИКА