NEO-M8

u-blox M8 concurrent GNSS modules

Data sheet

Abstract
This data sheet describes the NEO-M8 module family which provides concurrent reception of up to 3 GNSS (GPS, Galileo, GLONASS, BeiDou). NEO-M8 is backward compatible with NEO-7, NEO-6 and NEO-5 families.

www.u-blox.com

UBX-15031086 - R12

C1-Public

sales@prom-elec.com / ООО ПРОМЭЛЕКТРОНИКА

Document information

Title	**NEO-M8**	
Subtitle	u-blox M8 concurrent GNSS modules	
Document type	Data sheet	
Document number	UBX-15031086	
Revision and date	R12	16-Dec-2022
Document status	Production information	
Disclosure restriction	C1-Public	

Product status	**Corresponding content status**	
In Development / Prototype	Objective Specification	Target values. Revised and supplementary data will be published later.
Engineering Sample	Advance Information	Data based on early testing. Revised and supplementary data will be published later.
Initial Production	Early Production Information	Data from product verification. Revised and supplementary data may be published later.
Mass Production / End of Life	Production Information	Document contains the final product specification.

This document applies to the following products:

Product name	Type number	Firmware version	PCN/IN reference
NEO-M8N	NEO-M8N-0-12	Flash FW SPG 3.01	UBX-21015025, UBX-22039049
NEO-M8Q	NEO-M8Q-0-12	ROM SPG 3.01	UBX-21015025, UBX-22039049
NEO-M8M	NEO-M8M-0-11	ROM SPG 3.01	UBX-21015022, UBX-22039049
NEO-M8J	NEO-M8J-0-11	Flash FW SPG 3.05	UBX-21015025, UBX-22039049

u-blox or third parties may hold intellectual property rights in the products, names, logos and designs included in this document. Copying, reproduction, modification or disclosure to third parties of this document or any part thereof is only permitted with the express written permission of u-blox.
The information contained herein is provided “as is” and u-blox assumes no liability for its use. No warranty, either express or implied, is given, including but not limited to, with respect to the accuracy, correctness, reliability and fitness for a particular purpose of the information. This document may be revised by u-blox at any time without notice. For the most recent documents, visit www.u-blox.com.
Copyright © u-blox AG.

Contents

Document information **2**
Contents **3**
1 Functional description **5**
1.1 Overview 5
1.2 Product features 5
1.3 Performance 6
1.4 Block diagram 7
1.5 Supported GNSS constellations 7
1.5.1 GPS 7
1.5.2 GLONASS 8
1.5.3 BeiDou 8
1.5.4 Galileo 8
1.6 Assisted GNSS (A-GNSS) 8
1.6.1 AssistNow™ Online 8
1.6.2 AssistNow™ Offline 8
1.6.3 AssistNow™ Autonomous 9
1.7 Augmentation systems 9
1.7.1 Satellite-based augmentation system (SBAS) 9
1.7.2 QZSS 9
1.7.3 IMES 9
1.7.4 Differential GPS (D-GPS) 10
1.8 Broadcast navigation data and satellite signal measurements 10
1.9 Odometer 10
1.10 Data logging (NEO-M8N/J) 10
1.11 Geofencing 10
1.12 Message integrity protection 11
1.13 Spoofing detection 11
1.14 EXTINT: External interrupt 11
1.14.1 Pin control 11
1.14.2 Aiding 11
1.15 TIMEPULSE 12
1.16 Protocols and interfaces 12
1.17 Interfaces 12
1.17.1 UART 12
1.17.2 USB 12
1.17.3 SPI 12
1.17.4 Display data channel (DDC) 13
1.18 Clock generation 13
1.18.1 Oscillators 13
1.18.2 Real-time clock (RTC) 13

1.19 Power management 13
1.19.1 DC-DC converter 13
1.19.2 Power mode setup 13
1.19.3 Continuous mode 14
1.19.4 Power save mode 14
1.20 Antenna 14
1.21 LNA_EN 14
2 Pin definition 15
2.1 Pin assignment 15
2.2 Pin name changes 16
3 Configuration management 17
3.1 Interface selection (D_SEL) 17
4 Electrical specification 18
4.1 Absolute maximum rating 18
4.2 Operating conditions 18
4.3 Indicative current requirements 19
4.4 SPI timing diagrams 20
4.4.1 Timing recommendations 20
4.5 DDC timing diagrams 20
5 Mechanical specifications 21
6 Reliability tests and approvals 22
6.1 Reliability tests 22
6.2 Approvals 22
7 Product handling and soldering 23
7.1 Packaging 23
7.1.1 Reels 23
7.1.2 Tapes 23
7.2 Shipment, storage and handling 24
7.2.1 Moisture sensitivity levels 24
7.2.2 Reflow soldering 24
7.2.3 ESD handling precautions 24
8 Default messages 25
9 Labeling and ordering information 26
9.1 Product labeling 26
9.2 Explanation of codes 26
9.3 Ordering codes 26
Appendix 27
A Glossary 27
Related documents 28
Revision history 28
Contact 29

1 Functional description

1.1 Overview

The NEO-M8 series of concurrent GNSS modules is built on the high-performing u-blox M8 GNSS engine in the industry-proven NEO form factor.

The NEO-M8 modules utilize concurrent reception of up to three GNSS systems (GPS/Galileo together with BeiDou or GLONASS), recognize multiple constellations simultaneously and provide outstanding positioning accuracy in scenarios where urban canyon or weak signals are involved. For even better and faster positioning improvement, the NEO-M8 series supports augmentation of QZSS, GAGAN and IMES together with WAAS, EGNOS, and MSAS. The NEO-M8 series also supports message integrity protection, geofencing, and spoofing detection with configurable interface settings to easily fit to customer applications.

The NEO-M8M is optimized for cost-sensitive applications, while NEO-M8N and NEO-M8Q provide the best performance. The future-proof NEO-M8N and NEO-M8J include an internal flash that allows future firmware updates. This makes NEO-M8N and NEO-M8J perfectly suited to industrial and automotive applications.

The I2C-compliant DDC interface provides connectivity and enables synergies with most u-blox cellular modules. For RF optimization, NEO-M8J, NEO-M8N, and NEO-M8Q feature an additional front-end LNA for easier antenna integration and a front-end SAW filter for increased jamming immunity.

u-blox M8 modules use GNSS chips qualified according to AEC-Q100, are manufactured in ISO/TS 16949 certified sites, and are fully tested on a system level. Qualification tests are performed as stipulated in the ISO16750 standard: “Road vehicles – Environmental conditions and testing for electrical and electronic equipment”.

The u-blox NEO-M8 modules can also benefit from the u-blox AssistNow assistance service. The Online service provides GNNS broadcast parameters, for example, ephemeris, almanac plus time or rough position to reduce the receiver’s time to first fix significantly and to improve acquisition sensitivity. The extended validity of AssistNow Offline data (up to 35 days) and AssistNow Autonomous data (up to 6 days) provide faster acquisition after a long off time.

☞ See section 1.6 for more information concerning the NEO-M8 related AssistNow Assistance.

1.2 Product features

Model	Category				GNSS					Supply		Interfaces				Features									Grade		
	Standard Precision	High Precision GNSS	Dead Reckoning	Timing	GPS / QZSS	GLONASS	Galileo	BeiDou	Number of concurrent GNSS	1.65 V – 3.6 V	2.7 V – 3.6 V	UART	USB	SPI	DDC (I^2C compliant)	Programmable (flash)	Data logging	Additional SAW	Additional LNA	RTC crystal	Oscillator	Built-in antenna	Built-in antenna supply and supervisor	Timepulse	Standard	Professional	Automotive
NEO-M8N	•				•	•	•	•	3		•	•	•	•	•	•	•	•	•	•	T			1		•	
NEO-M8Q	•				•	•	•	•	3		•	•	•	•	•			•	•	•	T			1		•	
NEO-M8M	•				•	•	•	•	3	•		•	•	•	•					•	C			1		•	
NEO-M8J	•				•	•	•	•	3		•	•	•	•	•	•	•	•	•	•	C			1		•	

C = Crystal / T = TCXO

1.3 Performance

Parameter	Specification					
Receiver type	72-channel u-blox M8 engine GPS L1C/A, SBAS L1C/A, QZSS L1C/A, QZSS L1 SAIF, GLONASS L1OF, BeiDou B1I, Galileo E1B/C					
Accuracy of time pulse signal	RMS 99%	30 ns 60 ns				
Frequency of time pulse signal		0.25 Hz...10 MHz (configurable)				
Operational limits [1]	Dynamics	≤ 4 g				
	Altitude	50,000 m				
	Velocity	500 m/s				
Velocity accuracy [2]		0.05 m/s				
Heading accuracy [2]		0.3 degrees				
GNSS		**GPS & GLONASS**	**GPS**	**GLONASS**	**BeiDou**	**Galileo**
Horizontal position accuracy [3]		2.5 m	2.5 m	4 m	3 m	3 m
	With SBAS	2.0 m	2.0 m	-	-	-
NEO-M8N/Q						
Max navigation update rate	NEO-M8N	5 Hz	10 Hz	10 Hz	10 Hz	10 Hz
	NEO-M8Q	10 Hz	18 Hz	18 Hz	18 Hz	18 Hz
Time-To-First-Fix [4]	Cold start	26 s	29 s	30 s	34 s	45 s
	Hot start	1 s	1 s	1 s	1 s	1 s
	Aided starts [5]	2 s	2 s	2 s	3 s	7 s
Sensitivity[6]	Tracking & Navigation	–167 dBm	–166 dBm	-166 dBm	-160 dBm	-159 dBm
	Reacquisition	–160 dBm	–160 dBm	-156 dBm	-157 dBm	-153 dBm
	Cold start	–148 dBm	–148 dBm	-145 dBm	-143 dBm	-138 dBm
	Hot start	–157 dBm	–157 dBm	-156 dBm	-155 dBm	-151 dBm
NEO-M8J/M						
Max navigation update rate	NEO-M8J	5 Hz	10 Hz	10 Hz	10 Hz	10 Hz
	NEO-M8M	10 Hz	18 Hz	18 Hz	18 Hz	18 Hz
Time-To-First-Fix [4]	Cold start	26 s	30 s	33 s	39 s	57 s
	Hot start	1 s	1 s	1 s	1 s	1 s
	Aided starts [6]	3 s	3 s	3 s	7 s	7 s
Sensitivity [6]	Tracking & Navigation	-164 dBm	-164 dBm	-163 dBm	-160 dBm	-154 dBm
	Reacquisition	-160 dBm	-159 dBm	-156 dBm	-155 dBm	-152dBm
	Cold start	-148 dBm	-147 dBm	-145 dBm	-143 dBm	-133 dBm
	Hot start	-157 dBm	-156 dBm	-155 dBm	-155 dBm	-151 dBm

Table 1: NEO-M8 performance in different GNSS modes (default: concurrent reception of GPS and GLONASS including QZSS, SBAS)

[1] Assuming Airborne < 4 g platform
[2] 50% at 30 m/s
[3] CEP, 50%, 24 hours static, -130 dBm, > 6 SVs
[4] All satellites at -130 dBm, except Galileo at -127 dBm
[5] Dependent on aiding data connection speed and latency
[6] Demonstrated with a good external LNA

1.4 Block diagram

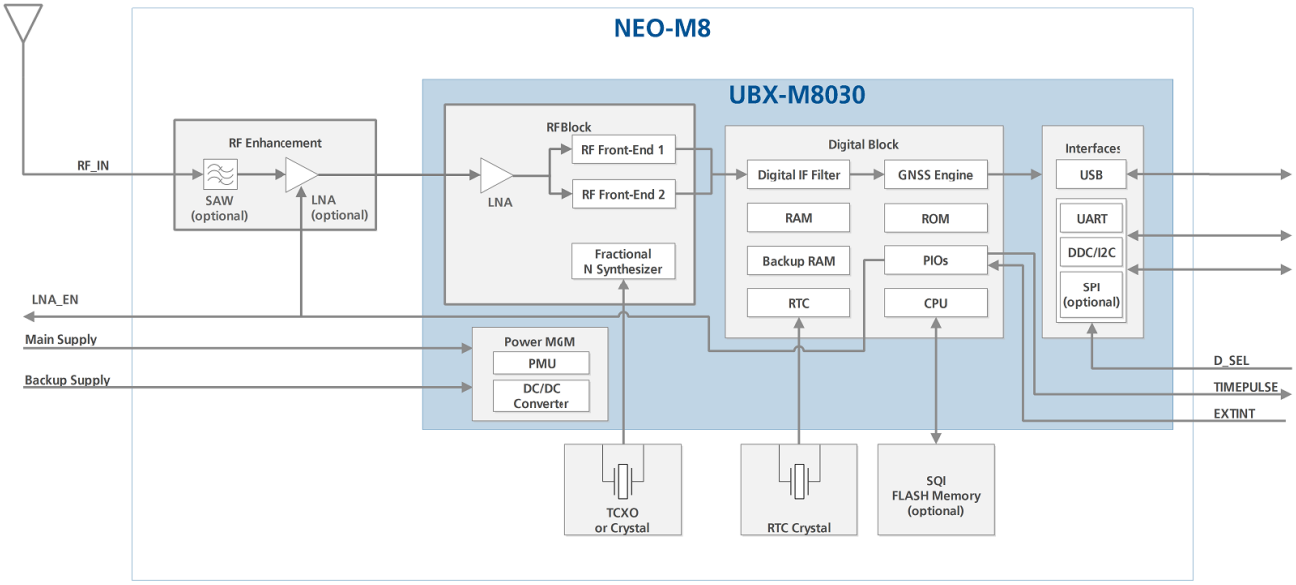

Figure 1: NEO-M8 block diagram

1.5 Supported GNSS constellations

The NEO-M8 GNSS modules are concurrent GNSS receivers which can receive and track multiple GNSS systems: GPS, Galileo, GLONASS and BeiDou. Owing to the dual-frequency RF front-end architecture, either GLONASS or BeiDou can be processed concurrently with GPS and Galileo signals providing reception of three GNSS systems. By default the M8 receivers are configured for concurrent GPS and GLONASS, including SBAS and QZSS reception. If power consumption is a key factor, the receiver should be configured for a single GNSS operation using GPS, Galileo, GLONASS or BeiDou and disabling QZSS and SBAS. The module can be configured to receive any single GNSS constellation or within the set of permissible combinations shown below.

GPS	Galileo	GLONASS	BeiDou
•	•	–	–
•	•	•	–
•	•	–	•
•	–	•	–
•	–	–	•
–	•	•	–
–	•	–	•
–	–	•	•

Table 2 Permissible GNSS combinations (• = enabled)

☞ The SBAS and QZSS augmentation systems can be enabled only if GPS operation is configured.

☞ Galileo is not enabled as the default configuration.

1.5.1 GPS

The NEO-M8 positioning modules are designed to receive and track the L1C/A signals provided at 1575.42 MHz by the global positioning system (GPS).

1.5.2 GLONASS

The NEO-M8 modules can receive and process the GLONASS satellite system as an alternative to the US-based global positioning system (GPS). u-blox NEO-M8 positioning modules are designed to receive and track the L1OF signals GLONASS provides at 1602 MHz + k*562.5 kHz, where k is the satellite's frequency channel number (k = –7,..., 5, 6). The ability to receive and track GLONASS L1OF satellite signals allows design of GLONASS receivers where required by regulations.

To take advantage of GPS and GLONASS, dedicated hardware preparation must be made during the design-in phase. See the NEO-8Q / NEO-M8 Hardware integration manual [1] for u-blox design recommendations.

1.5.3 BeiDou

The NEO-M8 modules can receive and process the B1I signals broadcast at 1561.098 MHz from the BeiDou Navigation Satellite System. The ability to receive and track BeiDou signals in conjunction with another constellation results in higher coverage, improved reliability and better accuracy.

1.5.4 Galileo

The NEO-M8 positioning modules can receive and track the E1-B/C signals centered on the GPS L1 frequency band. GPS and Galileo signals can be processed concurrently together with either BeiDou or GLONASS signals, enhancing coverage, reliability and accuracy. The SAR return link message (RLM) parameters for both short and long versions are decoded by the receiver and made available to users via UBX proprietary messages.

☞ Galileo has been implemented according to ICD release 1.2 (November 2015) and verified with live signals from the Galileo in-orbit validation campaign.

☞ Galileo reception is by default disabled, but can be enabled by sending a configuration message (UBX-CFG-GNSS) to the receiver. See the u-blox 8 / u-blox M8 Receiver Description including Protocol Specification [2] for more information.

1.6 Assisted GNSS (A-GNSS)

Supply of GNSS receiver assistance information, such as ephemeris, almanac, rough user position and time, will reduce the time to first fix significantly and improve acquisition sensitivity. The NEO-M8J, NEO-M8N, NEO-M8Q, and NEO-M8M modules support the u-blox AssistNow Online and AssistNow Offline A-GNSS services, support AssistNow Autonomous, and are OMA SUPL compliant.

1.6.1 AssistNow™ Online

With AssistNow Online, an internet-connected host downloads assistance data from the u-blox AssistNow Online service to the receiver at system start-up. The Multi-GNSS Assistance (MGA) service is an HTTP protocol-based network operator-independent service.

Supplying assistance information, such as ephemeris, almanac, a rough last position and time, can reduce the time to first fix significantly and improve acquisition sensitivity.

☞ The AssistNow Online service provides data for GPS, GLONASS, BeiDou, Galileo and QZSS

1.6.2 AssistNow™ Offline

With the AssistNow Offline service, users can download long-term orbit data over the internet at their convenience. The orbit data can be stored in the GNSS receiver's SQI flash memory or, alternatively, within the memory of the application processor. The function requires no connectivity at system

start-up, enabling a position fix within seconds, even when no network is available. AssistNow Offline offers augmentation for up to 35 days.

☞ AssistNow Offline service provides data for GPS and GLONASS only, BeiDou and Galileo are not currently supported.

1.6.3 AssistNow™ Autonomous

AssistNow Autonomous provides aiding information without the need for a host or external network connection. Based on previous broadcast satellite ephemeris data downloaded to and stored by the GNSS receiver, AssistNow Autonomous automatically generates accurate predictions of satellite orbital data ("AssistNow Autonomous data") that is usable for future GNSS position fixes. The concept capitalizes on the periodic nature of GNSS satellites; by capturing strategic ephemeris data at specific times of the day. The flash memory-based NEO-M8N/J modules can predict accurate satellite ephemeris for up to six days after initial reception. The ROM-based NEO-M8M/Q modules can use only GPS satellites with a prediction time of up to three days.

u-blox AssistNow Autonomous benefits are:

- Faster fix in situations where satellite signals are weak
- No connectivity required
- Compatible with AssistNow Online (can work stand-alone, or in tandem with AssistNow Online service)
- No integration effort; calculations are done in the background, transparent to the user

☞ For more details on A-GNSS, see the u-blox 8 / u-blox M8 Receiver Description including Protocol Specification [2].

1.7 Augmentation systems

1.7.1 Satellite-based augmentation system (SBAS)

The u-blox NEO-M8 modules support reception of SBAS broadcast signals. These systems supplement GNSS data with additional regional or wide area GPS augmentation data. The system broadcasts range correction and integrity information via satellite which can be used by GNSS receivers to improve resulting precision. SBAS satellites can be used as additional satellites for ranging (navigation), further enhancing availability. The following SBAS types are supported: GAGAN, WAAS, EGNOS and MSAS.

☞ For more details, see the u-blox 8 / u-blox M8 Receiver Description, Protocol Specification [2].

1.7.2 QZSS

The Quasi-Zenith Satellite System (QZSS) is a regional navigation satellite system that transmits additional GPS L1 C/A signals for the Pacific region covering Japan and Australia. NEO-M8 positioning modules are able to receive and track these signals concurrently with GPS signals, resulting in better availability especially under challenging signal conditions, e.g. in urban canyons. The L1- SAIF signal provided by QZSS can be enabled for reception via a GNSS configuration message.

1.7.3 IMES

The Japanese Indoor Messaging System (IMES) system is used for indoor position reporting using low-power transmitters which broadcast a GPS–like signal. NEO-M8 modules can be configured to receive and demodulate the signal to provide an in-door location estimate.

☞ This service is authorized and available only in Japan.

☞ IMES reception is disabled by default.

1.7.4 Differential GPS (D-GPS)

u-blox receivers support Differential GPS (D-GPS) data according to RTCM specification 10402.3 [4]: The use of D-GPS improves GPS position accuracy. The RTCM implementation supports the following RTCM 2.3 messages.

Message type	Description
1	Differential GPS corrections
2	Delta differential GPS corrections
3	GPS reference station parameters
9	GPS partial correction set

Table 3: Supported RTCM 2.3 messages

☞ RTCM corrections cannot be used together with SBAS.

☞ For more details, see the u-blox 8 / u-blox M8 Receiver Description including Protocol Specification [2].

1.8 Broadcast navigation data and satellite signal measurements

The NEO-M8 modules can output all the GNSS broadcast data upon reception from tracked satellites. This includes all the supported GNSS signals plus the augmentation services SBAS, QZSS and IMES. The receiver also makes available the tracked satellite signal information, that is, raw code phase and Doppler measurements in a form aligned to the ETSI mobile cellular location services protocol (RRLP) [6]. For more details, see the u-blox 8 / u-blox M8 Receiver Description including Protocol Specification [2].

1.9 Odometer

The odometer function provides information on travelled ground distance (in meters) based on the position and Doppler-based velocity output from the navigation solution. For each computed distance since the last odometer reset, the odometer estimates a 1-sigma accuracy value. The total cumulative ground distance is maintained and saved in the BBR memory.

☞ The odometer feature is disabled by default. For more details, see the u-blox 8 / u-blox M8 Receiver Description including Protocol Specification [2].

1.10 Data logging (NEO-M8N/J)

The NEO-M8N and NEO-M8J modules can be used in data logging applications. The data logging feature enables continuous storage of position, velocity and time information to an onboard SQI flash memory (at least 16 Mbit). It can also log the distance from the odometer. The information can be downloaded from the receiver later for further analysis or for conversion to a mapping tool. For more information see the u-blox 8 / u-blox M8 Receiver Description including Protocol Specification [2].

1.11 Geofencing

The u-blox NEO-M8 modules support up to four circular Geofencing areas defined on the Earth's surface using a 2D model. Geofencing is active when at least one Geofence is defined, the current status can be found by polling the receiver. A GPIO pin can be nominated to indicate status to, for example, wake up a host on activation.

1.12 Message integrity protection

The NEO-M8 modules provide a function to detect third party interference with the UBX message steam sent from receiver to host. The security mechanism “signs” nominated messages via a subsequent UBX message. This message signature is then compared with one generated by the host to determine if the message data has been altered. The signature algorithm seed can use one fixed secret ID key set by eFuse in production and a dynamic ID key set by the host, enabling users to detect “man-in-the-middle” style attacks.

1.13 Spoofing detection

Spoofing is a process whereby a malicious third party tries to control the reported position via a “fake” GNSS broadcast signal. This may result in the form of reporting incorrect position, velocity or time. To combat against this, NEO-M8 modules include spoofing detection measures to alert the host when signals appear to be suspicious. The receiver combines a number of checks on the received signals looking for inconsistencies across several parameters.

☞ This feature does not guarantee detecting all spoofing attacks.

1.14 EXTINT: External interrupt

EXTINT is an external interrupt pin with fixed input voltage thresholds with respect to **VCC**. It can be used for control of the receiver or for aiding.

For more information about how to implement and configure these features, see the u-blox 8 / u-blox M8 Receiver Description including Protocol Specification [2] and the NEO-8Q / NEO-M8 Hardware integration manual [1].

1.14.1 Pin control

The pin control feature allows overriding the automatic active/inactive cycle of power save mode. The state of the receiver can be controlled through the **EXTINT** pin.

The receiver can also be forced OFF using **EXTINT** when power save mode is not active.

1.14.2 Aiding

The **EXTINT** pin can be used to supply time or frequency aiding data to the receiver.

For time aiding, hardware time synchronization can be achieved by connecting an accurate time pulse to the **EXTINT** pin.

Frequency aiding can be implemented by connecting a periodic rectangular signal with a frequency up to 500 kHz and arbitrary duty cycle (low/high phase duration must not be shorter than 50 ns) to the **EXTINT** pin. Provide the applied frequency value to the receiver using UBX messages.

1.15 TIMEPULSE

A configurable time pulse signal is available with the NEO-M8N, NEO-M8J, NEO-M8Q, and NEO-M8M modules.

The **TIMEPULSE** output generates pulse trains synchronized with GPS or UTC time grid with intervals configurable over a wide frequency range. Thus it may be used as a low frequency time synchronization pulse or as a high frequency reference signal.

By default the time pulse signal is configured to 1 pulse per second. For more information, see the u-blox 8 / u-blox M8 Receiver Description including Protocol Specification [2].

1.16 Protocols and interfaces

Protocol	Type
NMEA 0183, version 4.0 (V2.1, V2.3 or V4.1 configurable)	Input/output, ASCII
UBX	Input/output, binary, u-blox proprietary
RTCM	Input message, 1, 2, 3, 9

Table 4: Available protocols

All protocols are available on UART, USB, DDC (I2C-compliant) and SPI. For specification of the various protocols, see the u-blox 8 / u-blox M8 Receiver Description including Protocol Specification [2].

1.17 Interfaces

A number of interfaces are provided either for data communication or memory access. The embedded firmware uses these interfaces according to their respective protocol specifications.

1.17.1 UART

The NEO-M8 modules include one UART interface, which can be used for communication to a host. It supports configurable baud rates. For supported baud rates, see the u-blox 8 / u-blox M8 Receiver Description including Protocol Specification [2].

☞ Designs must allow access to the UART and the **SAFEBOOT_N** function pin for future service, updates and reconfiguration.

1.17.2 USB

A USB interface, which is compatible to USB version 2.0 FS (full speed, 12 Mbit/s), can be used for communication as an alternative to the UART. The pull-up resistor on pin USB_DP is integrated to signal a full-speed device to the host. The VDD_USB pin supplies the USB interface. The u-blox USB (CDC-ACM) driver supports Windows Vista and Windows 7 and 8 operating systems. A separate driver (CDC-ACM) is not required for Windows 10 which has a built-in USB-serial driver. However, plugging initially into an internet-connected Windows 10 PC will download the u-blox combined sensor and VCP driver package.

☞ USB drivers can be downloaded from the u-blox web site, www.u-blox.com.

1.17.3 SPI

The SPI interface is designed to allow communication to a host CPU. The interface can be operated in slave mode only. The maximum transfer rate using SPI is 125 kB/s and the maximum SPI clock frequency is 5.5 MHz. Note that SPI is not available in the default configuration because its pins are shared with the UART and DDC interfaces. The SPI interface can be enabled by connecting **D_SEL** (pin 2) to ground (see section 3.1).

1.17.4 Display data channel (DDC)

An I2C-compliant DDC interface is available for communication with an external host CPU or u-blox cellular modules. The interface can be operated in slave mode only. The DDC protocol and electrical interface are fully compatible with the fast-mode of the I2C industry standard. Since the maximum SCL clock frequency is 400 kHz, the maximum transfer rate is 400 kbit/s.

1.18 Clock generation

1.18.1 Oscillators

NEO-M8 GNSS modules are available in TCXO and crystal versions. The TCXO allows accelerated weak signal acquisition, enabling faster start and reacquisition times.

Oscillators used on NEO-M8 modules are carefully selected and screened for stability and against frequency perturbations across the full operating range (–40 °C to +85 °C).

The careful selection and qualification of critical parts, such as GNSS oscillators, has resulted in u-blox modules being the most reliable positioning modules in the industry, particularly in challenging conditions.

1.18.2 Real-time clock (RTC)

The RTC is driven by a 32 kHz oscillator using an RTC crystal. If the main supply voltage fails, and a battery is connected to **V_BCKP**, parts of the receiver switch off, but the RTC still runs providing a timing reference for the receiver. This operating mode is called hardware backup mode, which enables all relevant data to be saved in the backup RAM to allow a hot or warm start later.

1.19 Power management

u-blox M8 technology offers a power-optimized architecture with built-in autonomous power saving functions to minimize power consumption at any given time. Furthermore, the receiver can be used in two operating modes: continuous mode for best performance or power save mode for optimized power consumption, respectively.

1.19.1 DC-DC converter

The NEO-M8 modules integrate a DC-DC converter, allowing reduced power consumption especially when using a main supply voltage above 2.5 V.

☞ For more information, see the NEO-8Q / NEO-M8 Hardware integration manual [1].

1.19.2 Power mode setup

u-blox M8 modules can be configured to run in either continuous or a choice of power save mode configurations. A template of power mode settings can be used to easily select typical power mode setups to cover the majority of users' requirements.

For specific power saving applications the user has the option to fully configure via the power save mode configuration. For more information, see section 1.19.4.

The u-blox M8 modules' power mode setup offers a choice of continuous operation and preset power save mode configurations.

- Continuous (default) mode for best GNSS performance vs. power consumption
- Continuous with no compromise in power consumption
- A 1 Hz cyclic tracking mode for aggressive power reduction

- Choice of 2 or 4 Hz[7] cyclic tracking modes for typical wearable applications
- ON/OFF interval mode

1.19.3 Continuous mode

Continuous mode uses the acquisition engine at full performance resulting in the shortest possible TTFF and the highest sensitivity. It searches for all possible satellites until the Almanac is completely downloaded. The receiver then switches to the tracking engine to lower power consumption.

Thus, a lower tracking current consumption level will be achieved when:

- A valid GNSS position is obtained
- The entire Almanac has been downloaded
- The Ephemeris for each satellite in view is valid

1.19.4 Power save mode

For specific power saving applications outside the typical preset power mode setups, users can configure a tailored power save mode.

The power save mode provides two dedicated methods, ON/OFF and cyclic tracking, that reduce average current consumption in different ways to match the needs of the specific application. These operations can be set by using a specific UBX message.

☞ For more information about power management strategies, see the u-blox 8 / u-blox M8 Receiver Description including Protocol Specification [2].

1.20 Antenna

NEO-M8 modules are designed for use with passive [8] and active [9] antennas.

Parameter	Specification	
Antenna type		Passive and active antenna
Active antenna recommendations	Minimum gain	15 dB (to compensate signal loss in RF cable)
	Maximum gain	50[10] dB / 30[11] dB
	Maximum noise figure	1.5 dB

Table 5: Antenna specifications for NEO-M8 modules

1.21 LNA_EN

The LNA_EN pin provides optional control for switching off power to an active antenna or separate LNA. This facility is provided to help minimize power consumption in power save mode operation. See the NEO-8Q / NEO-M8 Hardware integration manual [1] for more information.

[7] Single GNSS constellation configuration only.
[8] For integration of NEO-M8 modules with Cellular products, see the NEO-8Q / NEO-M8 Hardware integration manual [1].
[9] For using active antennas with NEO-M8 modules, see the NEO-8Q / NEO-M8 Hardware integration manual [1].
[10] NEO-M8M
[11] NEO-M8N/J/Q

2 Pin definition

2.1 Pin assignment

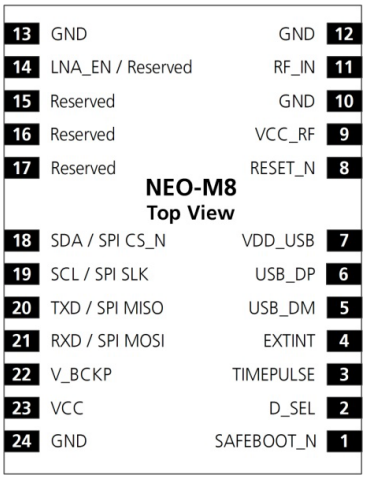

☞ PIO = Peripheral Input Output

Figure 2: Pin assignment

No.	Name	PIO no.	I/O	Description
1	SAFEBOOT_N	-	I	SAFEBOOT_N (for future service, updates and reconfiguration, leave OPEN)
2	D_SEL	-	I	Interface select
3	TIMEPULSE	11	O	Time pulse (1PPS)
4	EXTINT	13	I	External interrupt pin
5	USB_DM	-	I/O	USB data
6	USB_DP	-	I/O	USB data
7	VDD_USB	-	I	USB supply
8	RESET_N	-	I	RESET_N
9	VCC_RF	-	O	Output voltage RF section
10	GND	-	I	Ground
11	RF_IN	-	I	GNSS signal input
12	GND	-	I	Ground
13	GND	-	I	Ground
14	LNA_EN / Reserved	16	O	LNA_EN (NEO-M8N/Q/J): Antenna/LNA control Reserved (NEO-M8M): Reserved
15	Reserved		-	Reserved
16	Reserved		-	Reserved
17	Reserved		-	Reserved
18	SDA / SPI CS_N	9	I/O	DDC data if D_SEL =1 (or open) SPI chip select if D_SEL = 0
19	SCL / SPI CLK	8	I/O	DDC clock if D_SEL =1 (or open) SPI clock if D_SEL = 0
20	TXD / SPI MISO	6	O	Serial port if D_SEL =1 (or open) SPI MISO if D_SEL = 0
21	RXD / SPI MOSI	7	I	Serial port if D_SEL =1 (or open) SPI MOSI if D_SEL = 0
22	V_BCKP	-	I	Backup voltage supply
23	VCC		I	Supply voltage
24	GND		I	Ground

Table 6: Pinout of NEO-M8

☞ Pins designated as “Reserved” should not be used. For more information about pinouts, see the NEO-8Q / NEO-M8 Hardware integration manual [1].

2.2 Pin name changes

Selected pin names have been updated to agree with a common naming convention across u-blox modules. The pins have not changed their operation and are the same physical hardware but with updated names. The table below lists the pins that have a changed name along with their old and new names.

No.	Previous name	New name
1	Reserved	SAFEBOOT_N
14	ANT_ON	LNA_EN
20	TxD SPI MISO	TXD / SPI MISO
21	RxD SPI MOSI	RXD / SPI MOSI

Table 7: Pin name changes

3 Configuration management

Configuration settings can be modified with UBX configuration messages. The modified settings remain effective until power-down or reset. If these settings have been stored in battery-backup RAM, the modified configuration will be retained as long as the backup battery supply is not interrupted.

With the NEO-M8, configuration settings modified with UBX configuration messages can be saved permanently. In this case, the modified settings remain effective even after power-down and do not require backup battery supply.

3.1 Interface selection (D_SEL)

At startup, pin 2 (**D_SEL**) determines which data interfaces are used for communication. If **D_SEL** is set high or left open, UART and DDC become available. If **D_SEL** is set low, that is, connected to ground, the NEO-M8 module series can communicate to a host via SPI.

Pin #	D_SEL="1" (left open)	D_SEL ="0" (connected to GND)
20	UART TX	SPI MISO
21	UART RX	SPI MOSI
19	DDC SCL	SPI CLK
18	DDC SDA	SPI CS_N

Table 8: Data interface selection by D_SEL

4 Electrical specification

☞ The limiting values given are in accordance with the Absolute Maximum Rating System (IEC 134). Stress above one or more of the limiting values may cause permanent damage to the device. These are stress ratings only and operation of the device at these or at any other conditions above those given in the characteristics sections of the specification is not implied. Exposure to these limits for extended periods may affect device reliability.

☞ Where application information is given, it is advisory only and does not form part of the specification. For more information, see the NEO-8Q / NEO-M8 Hardware integration manual [1].

4.1 Absolute maximum rating

Parameter	Symbol	Condition	Min	Max	Units
Power supply voltage	VCC		–0.5	3.6	V
Backup battery voltage	V_BCKP		–0.5	3.6	V
USB supply voltage	VDD_USB		–0.5	3.6	V
Input pin voltage	V_{IN}	If VCC < 3.1V If VCC > 3.1V	–0.5 -0.5	VCC+0.5 3.6	V V
	V_{IN_USB}		–0.5	VDD_USB	V
DC current through any digital I/O pin (except supplies)	I_{PIN}			10	mA
VCC_RF output current	ICC_RF			100	mA
Input power at RF_IN	P_{RFIN}	source impedance = 50 Ω, continuous wave		15	dBm
Storage temperature	T_{STG}	NEO-M8N/M8Q/M8J NEO-M8M	–40 –40	85 105	°C

Table 9: Absolute maximum ratings

⚠ Stressing the device beyond the “Absolute Maximum Ratings” may cause permanent damage. These are stress ratings only. The product is not protected against overvoltage or reversed voltages. If necessary, voltage spikes exceeding the power supply voltage specification, given in Table 9, must be limited to values within the specified boundaries by using appropriate protection diodes.

4.2 Operating conditions

☞ All specifications are at an ambient temperature of +25 °C. Extreme operating temperatures can significantly impact specification values. Applications operating near the temperature limits should be tested to ensure the specification.

Parameter	Symbol	Min	Typical	Max	Units	Condition
Power supply voltage **NEO-M8N/Q/J**	VCC	2.7	3.0	3.6	V	
Power supply voltage **NEO-M8M**	VCC	1.65	1.8, 3.0	3.6	V	
Supply voltage USB	VDDUSB	3.0	3.3	3.6	V	
Backup battery voltage	V_BCKP	1.4		3.6	V	
Backup battery current	I_BCKP		15		µA	V_BCKP = 1.8 V, VCC = 0 V
SW backup current	I_SWBCKP		30		µA	VCC = 3 V
Input pin voltage range	V_{IN}	0		VCC	V	
Digital IO pin low level input voltage	V_{IL}	0		0.2*VCC	V	
Digital IO pin high level input voltage	V_{IH}	0.7*VCC		VCC	V	

Parameter	Symbol	Min	Typical	Max	Units	Condition
Digital IO pin low level output voltage	V_{OL}			0.4	V	I_{OL} = 4mA
Digital IO pin high level output voltage	V_{OH}	VCC–0.4			V	I_{OH} = 4mA
Pull-up resistor for RESET_N (internal)	R_{PU}		11		kΩ	
USB_DM, USB_DP	$V_{IN}U$	Compatible with USB with 27 Ω series resistance				
VCC_RF voltage	VCC_RF		VCC–0.1		V	
VCC_RF output current	ICC_RF			50	mA	
Receiver chain noise figure [12]	NF_{TOT}		2.0		dB	
Operating temperature	T_{OPR}	–40		85	°C	

Table 10: Operating conditions

☞ Operation beyond the specified operating conditions can affect device reliability.

4.3 Indicative current requirements

Table 11 lists examples of the total system supply current for a possible application.

☞ Values in Table 11 are provided for customer information only as an example of typical power requirements. Values are characterized on samples, actual power requirements can vary depending on FW version used, external circuitry, number of SVs tracked, signal strength, type of start as well as time, duration and conditions of test.

Parameter	Symbol	Module	Typical GPS & GLONASS	Typical GPS	Max	Units	Condition
Max. supply current [13]	I_{CCP}	All			67	mA	
Average supply current [14, 15]	I_{CC} Acquisition [16]	NEO-M8N	32	25		mA	Estimated at 3 V
		NEO-M8M	24	19		mA	
		NEO-M8Q	30	24		mA	
		NEO-M8J	31	24		mA	
	I_{CC} Tracking (continuous mode)	NEO-M8N	30	23		mA	Estimated at 3 V
		NEO-M8M	21	17		mA	
		NEO-M8Q	28	23		mA	
		NEO-M8J	29	23		mA	
	I_{CC} Tracking (Power Save mode / 1 Hz)	NEO-M8N	13	12		mA	Estimated at 3 V
		NEO-M8M	5.3	4.8		mA	
		NEO-M8Q	11.5	11.1		mA	
		NEO-M8J	12	11		mA	

Table 11: Indicative power requirements at 3.0 V

☞ For more information about power requirements, see the NEO-8Q / NEO-M8 Hardware integration manual [1].

☞ For more information on how to noticeably reduce current consumption, see the Power Management Application Note [5].

[12] Only valid for the GPS band.
[13] Use this figure to dimension maximum current capability of power supply. Measure this parameter with 1 Hz bandwidth.
[14] Use this figure to determine required battery capacity.
[15] Simulated GNSS constellation using power levels of -130 dBm. VCC = 3.0 V.
[16] Average current from start-up until the first fix.

4.4 SPI timing diagrams

To avoid incorrect operation of the SPI, the user needs to comply with certain timing conditions. Consider the following signals for timing constraints:

Symbol	Description
SPI CS_N (SS_N)	Slave select signal
SPI CLK (SCK)	Slave clock signal

Table 12: Symbol description

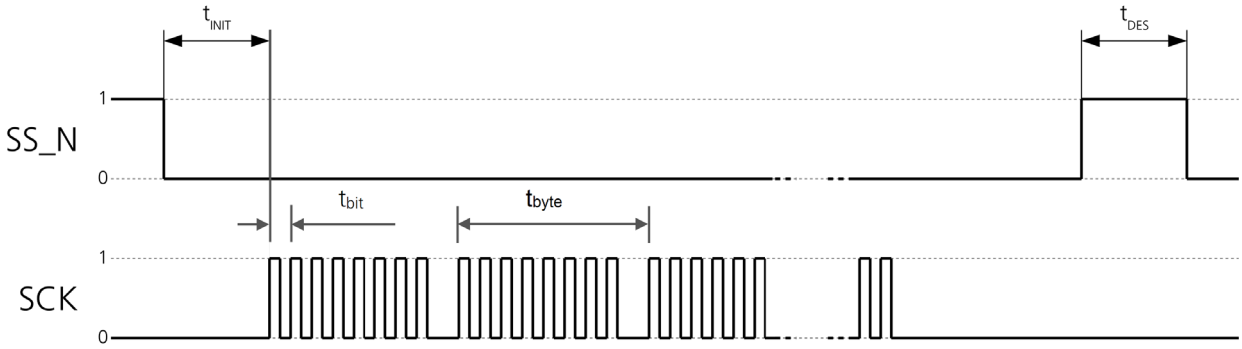

Figure 3: SPI timing diagram

4.4.1 Timing recommendations

The recommendations below are based on a firmware running from flash memory.

Parameter	Description	Recommendation
t_{INIT}	Minimum initialization time	10 us
t_{DES}	Deselect time	1 ms
t_{bit}	Minimum bit time	180 ns (5.5 MHz maximum bit frequency)
t_{byte}	Minimum byte period	8 µs (125 kHz maximum byte frequency)

Table 13: SPI timing recommendations

☞ The values in Table 13 result from the requirement of an error-free transmission. By allowing just a few errors and disabling the glitch filter, the bit rate can be increased considerably.

4.5 DDC timing diagrams

The DDC interface is I2C Fast Mode compliant. For timing parameters, consult the I2C standard.

☞ The maximum bit rate is 400 kbit/s. The interface stretches the clock when slowed down when serving interrupts, so real bit rates may be slightly lower.

5 Mechanical specifications

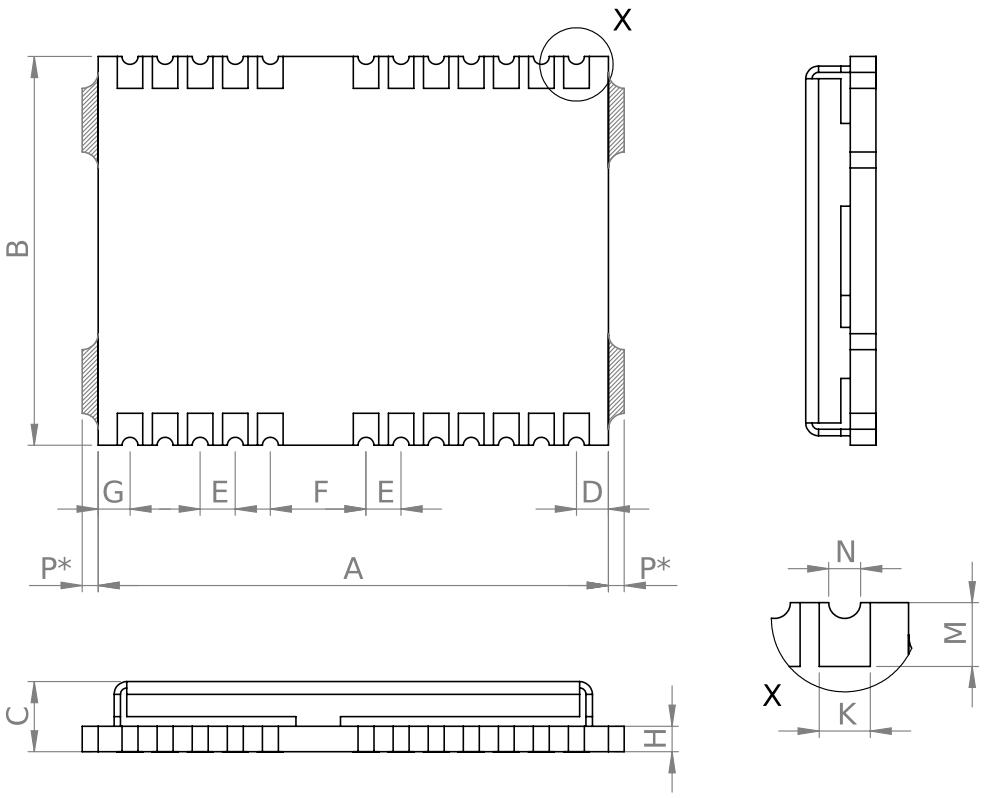

Figure 4: NEO-M8 mechanical drawing

Symbol	Min [mm]	Typ. [mm]	Max [mm]	
A	15.9	16.0	16.1	
B	12.1	12.2	12.3	
C	2.2	2.4	2.6	
D	0.9	1.0	1.1	
E	1.0	1.1	1.2	
F	2.9	3.0	3.1	
G	0.9	1.0	1.1	
H	-	0.82	-	
K	0.7	0.8	0.9	
M	0.8	0.9	1.0	
N	0.4	0.5	0.6	
P*	0.0	-	0.5	The de-paneling residual tabs may be on either side (not both)
Weight		1.6 g		

Table 14 NEO-M8 mechanical dimensions

☞ The mechanical picture of the de-paneling residual tabs (P*) is an approximate representation. The shape and position of the residual tab may vary.

☞ When designing the component keep-out area, note that the de-paneling residual tabs can be on either side of the module (not both).

☞ For information about the paste mask and footprint, see the NEO-8Q / NEO-M8 Hardware integration manual [1].

6 Reliability tests and approvals

6.1 Reliability tests

☞ The NEO-M8N, NEO-M8J, NEO-M8Q, and NEO-M8M modules are based on AEC-Q100 qualified GNSS chips.

Tests for product family qualifications are according to ISO 16750 "Road vehicles – environmental conditions and testing for electrical and electronic equipment", and appropriate standards.

6.2 Approvals

The NEO-M8N, NEO-M8J, NEO-M8Q, and NEO-M8M modules comply with the Directives 2011/65/EU and 2015/863/EU of the European Parliament and the Council on the Restriction of Use of certain Hazardous Substances (RoHS).

7 Product handling and soldering

7.1 Packaging

To enable efficient production, production lot set-up and tear-down, the NEO-M8 GNSS modules are delivered as hermetically sealed, reeled tapes. For more information, see the u-blox Packaging Information Reference [3].

7.1.1 Reels

The NEO-M8 GNSS modules are deliverable in quantities of 250 pcs on a reel. The NEO-M8 modules are shipped on reel type B, as specified in the u-blox Packaging Information Reference [3].

7.1.2 Tapes

The dimensions and orientations of the tapes for NEO-M8 modules are specified in Figure 5.

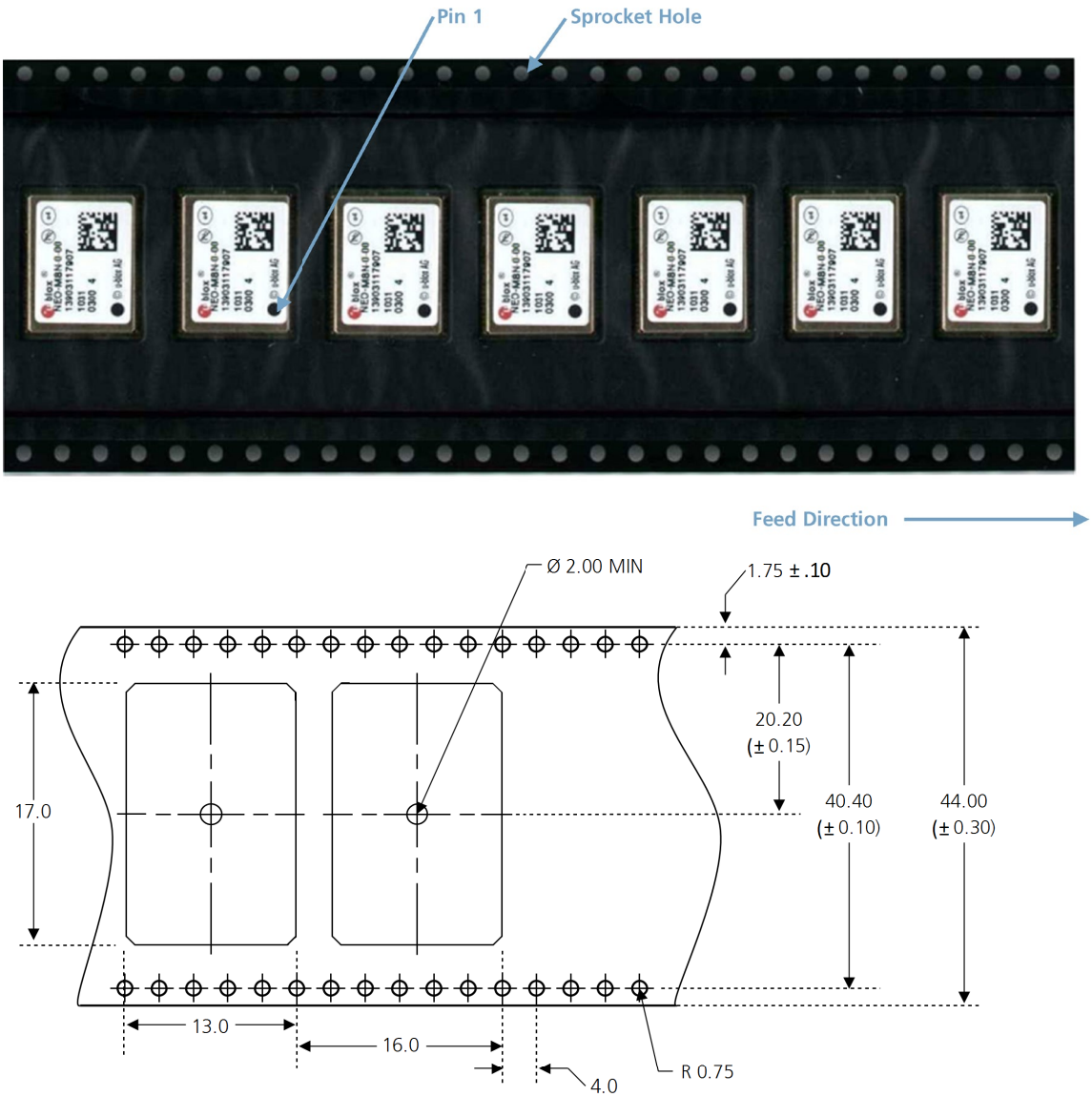

Figure 5: Dimensions and orientation for NEO-M8 modules on tape

7.2 Shipment, storage and handling

For important information regarding shipment, storage and handling, see the u-blox Packaging Information Reference [3].

7.2.1 Moisture sensitivity levels

The moisture sensitivity level (MSL) relates to the packaging and handling precautions required. The NEO-M8 modules are rated at MSL level 4.

☞ For MSL standard see IPC/JEDEC J-STD-020, which can be downloaded from www.jedec.org.

☞ For more information regarding MSL, see the u-blox Packaging Information Reference [3].

7.2.2 Reflow soldering

Reflow profiles are to be selected according to u-blox recommendations (see the NEO-8Q / NEO-M8 Hardware Integration Manual [1]).

7.2.3 ESD handling precautions

⚠ NEO-M8 modules are electrostatic sensitive devices (ESD). Observe precautions for handling! Failure to observe these precautions can result in severe damage to the GNSS receiver!

GNSS receivers are electrostatic sensitive devices (ESD) and require special precautions when handling. Exercise particular care when handling patch antennas, due to the risk of electrostatic charges. In addition to standard ESD safety practices, take the following measures into account whenever handling the receiver:

- Unless there is a galvanic coupling between the local GND (i.e. the work desk) and the PCB GND, the first point of contact when handling the PCB must always be between the local GND and PCB GND.
- Before mounting an antenna patch, connect ground of the device.
- When handling the RF pin, do not come into contact with any charged capacitors and be careful when contacting materials that can develop charges (e.g. patch antenna ~10 pF, coax cable ~50-80 pF/m, soldering iron).
- To prevent electrostatic discharge through the RF input, do not touch any exposed antenna area. If there is any risk that such exposed antenna area is touched in a non-ESD protected work area, implement proper ESD protection measures in the design.
- When soldering RF connectors and patch antennas to the receiver's RF pin, make sure to use an ESD safe soldering iron (tip).

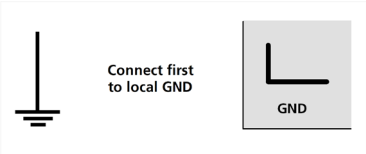

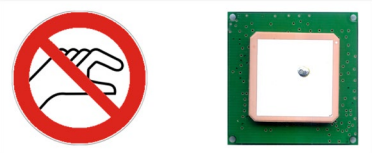

8 Default messages

Interface	Settings
UART output	9600 baud, 8 bits, no parity bit, 1 stop bit. Configured to transmit both NMEA and UBX protocols, but only the following NMEA (and no UBX) messages have been activated at start-up: **GGA, GLL, GSA, GSV, RMC, VTG, TXT**
USB output	Configured to transmit both NMEA and UBX protocols, but only the following NMEA (and no UBX) messages have been activated at start-up: **GGA, GLL, GSA, GSV, RMC, VTG, TXT** USB power mode: bus-powered
UART input	9600 baud, 8 bits, no parity bit, 1 stop bit, autobauding disabled. Automatically accepts following protocols without need of explicit configuration: UBX, NMEA, RTCM The GNSS receiver supports interleaved UBX and NMEA messages.
USB input	Automatically accepts following protocols without need of explicit configuration: UBX, NMEA The GPS receiver supports interleaved UBX and NMEA messages. USB power mode: bus-powered
DDC	Fully compatible with the I2C industry standard, available for communication with an external host CPU or u-blox cellular modules, operated in slave mode only. Default messages activated. NMEA and UBX are enabled as input messages, only NMEA as output messages. Maximum bit rate 400 kbit/s.
SPI	Allow communication to a host CPU, operated in slave mode only. Default messages activated. SPI is not available in the default configuration.
TIMEPULSE (1 Hz Nav)	1 pulse per second, synchronized at rising edge, pulse length 100 ms

Table 15: Default messages

☞ Refer to the u-blox 8 / u-blox M8 Receiver Description including Protocol Specification [2] for information about other settings.

9 Labeling and ordering information

9.1 Product labeling

The labeling of u-blox NEO-M8 GNSS modules includes important product information. The location of the NEO-M8 product type number is shown in Figure 6.

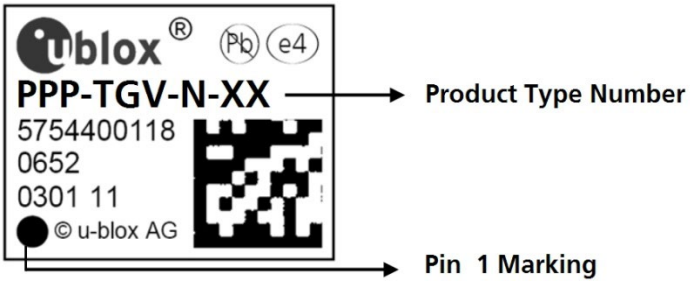

Figure 6: Location of product type number on u-blox NEO-M8 module label

9.2 Explanation of codes

Three different product code formats are used. The **Product name** is used in documentation such as this data sheet and identifies all u-blox M8 products, independent of packaging and quality grade. The **Ordering code** includes options and quality, while the **Type number** includes the hardware and firmware versions. Table 16 shows the structure of these three different formats.

Format	Structure
Product name	PPP-TGV
Ordering code	PPP-TGV-N
Type number	PPP-TGV-N-XX

Table 16: Product code formats

The parts of the product code are explained in Table 17.

Code	Meaning	Example
PPP	Product family	NEO
TG	Platform	M8 = u-blox M8
V	Variant	Function set (A-Z), T = Timing, R = DR, etc.
N	Option / Quality grade	Describes standardized functional element or quality grade 0 = Default variant, A = Automotive
XX	Product detail	Describes product details or options such as hard- and software revision, cable length, etc.

Table 17: Part identification code

9.3 Ordering codes

Ordering code	Product
NEO-M8J-0	u-blox M8 Concurrent GNSS LCC Module, crystal, flash, SAW, LNA, 12.2x16 mm, 250 pcs/reel
NEO-M8M-0	u-blox M8 Concurrent GNSS LCC Module, crystal, ROM, 12.2x16 mm, 250 pcs/reel
NEO-M8N-0	u-blox M8 Concurrent GNSS LCC Module, TCXO, flash, SAW, LNA, 12.2x16 mm, 250 pcs/reel
NEO-M8Q-0	u-blox M8 Concurrent GNSS LCC Module, TCXO, ROM, SAW, LNA, 12.2x16 mm, 250 pcs/reel

Table 18: Product ordering codes for professional grade modules

☞ Product changes affecting form, fit or function are documented by u-blox. For a list of Product Change Notifications (PCNs), see our website.

Appendix

A Glossary

Abbreviation	Definition
AEC	Automotive Electronics Council
BBR	Battery Backed RAM
DDC	Display Data Channel
EGNOS	European Geostationary Navigation Overlay Service
ESD	Electrostatic Sensitive Device*
FOC	Full Operational Capability
GAGAN	GPS Aided GEO Augmented Navigation
GLONASS	GLObal Navigation Satellite System (Russian)
GNSS	Global Navigation Satellite System
GPIO	General Purpose Input/Output
GPS	Global Positioning System
IMES	Indoor MEssaging System
I2C	Inter-Integrated Circuit
IEC	International Electrotechnical Commission
ISO	International Organization for Standardization
LCC	Leadless Chip Carrier
LCS	LoCation Services (protocol)
LNA	Low Noise Amplifier
MSAS	MTSAT Satellite Augmentation System
MSL	Moisture Sensitivity Level
NMEA	National Marine Electronics Association
PPP	Point-to-Point Protocol* / Precise Point Positioning*
PCB	Printed Circuit Board
PCN	Product Change Notification
PPS	Pulse Per Second
QZSS	Quasi-Zenith Satellite System
RLM	Return Link Message
RRLP	Radio Resource LCS Protocol
RTC	Real Time Clock
RTCM	Radio Technical Commission for Maritime Services
SAW	Surface Acoustic Wave
SBAS	Satellite-Based Augmentation System
SCL	Serial Clock
SMD	Solder Mask Defined
SUPL	Secure User Plane Location
TCXO	Temperature-Compensated Crystal Oscillator
TTFF	Time-To-First-Fix
UART	Universal Asynchronous Receiver/Transmitter
UTC	Coordinated Universal Time
WAAS	Wide Area Augmentation System

Table 19: Explanation of the abbreviations and terms used

Related documents

[1] NEO-8Q / NEO-M8 Hardware integration manual, UBX-15029985
[2] u-blox 8 / u-blox M8 Receiver description including Protocol Specification, UBX-13003221
[3] u-blox Packaging Information Reference, UBX-14001652
[4] RTCM 10402.3 Recommended Standards for Differential GNSS, Ver. 2.3, RTCM AUG. 20, 2001
[5] Power Management Application note, UBX-13005162
[6] Radio Resource LCS Protocol (RRLP), (3GPP TS 44.031 version 11.0.0 Release 11)

☞ For regular updates to u-blox documentation and to receive product change notifications, register on our homepage (www.u-blox.com).

Revision history

Revision	Date	Name	Comments
R01	28-Jan-2016	byou	Advance Information
R02	01-Jun-2016	byou	Added NEO-M8M and NEO-M8Q variant information, pin name change advisory
R03	05-Aug-2016	byou	Product Information
R04	23-May-2019	mbab, jesk	Updated sections 1.6.3 (AssistNow Autonomous), 184.1 (Absolute maximum rating) and 6.2 (RoHS statement), added PIO numbers in section 2.1
R05	24-Jan-2020	rmak	Updated section 4.2 Operating conditions (power supply voltage for NEO-M8M)
R06	25-Mar-2020	mala	Updated grade information in section 1.2 (Product features table)
R07	30-Apr-2020	msul	Updated type number and PCN reference for NEO-M8N and NEO-M8Q in page 2
R08	15-Feb-2021	oola	Added NEO-M8J variant information
R09	04-May-2021	oola	Updated page 2 (NEO-M8J to Initial Production status, NEO-M8J FW to SPG3.05, updated type number and PCN reference for NEO-M8M). Adjusted section 4.1 (NEO-M8M storage temperature). Updated NEO-M8J content in section 4.3 (Indicative current requirements).
R10	22-Jun-2021	imar	Updated type number and PCN reference for NEO-M8N, NEO-M8J and NEO-M8Q in page 2. Updated position accuracy in single GAL constellation (section 1.3 Performance).
R11	22-Oct-2021	mala	Document status updated to Production information in section Document information, updated Table 1 (added horizontal position accuracy with SBAS).
R12	16-Dec-2022	skar	Chapter Mechanical specifications updated with information on de-paneling residual tabs

Contact

u-blox AG

Address: Zürcherstrasse 68
8800 Thalwil
Switzerland

For further support and contact information, visit us at www.u-blox.com/support.