Kingbright

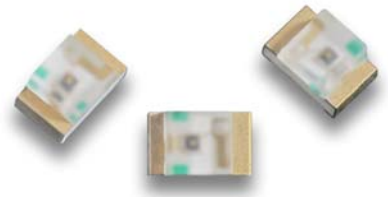

KP-2012SGC
2.0 x 1.25 mm SMD Chip LED Lamp

DESCRIPTION

- The Super Bright Green source color devices are made with Gallium Phosphide Green Light Emitting Diode

FEATURES

- 2.0 mm x 1.25 mm SMD LED, 1.1mm thickness
- Low power consumption
- Wide viewing angle
- Ideal for backlight and indicator
- Package: 2000 pcs / reel
- Moisture sensitivity level: 3
- RoHS compliant

APPLICATIONS

- Backlight
- Status indicator
- Home and smart appliances
- Wearable and portable devices
- Healthcare applications

PACKAGE DIMENSIONS

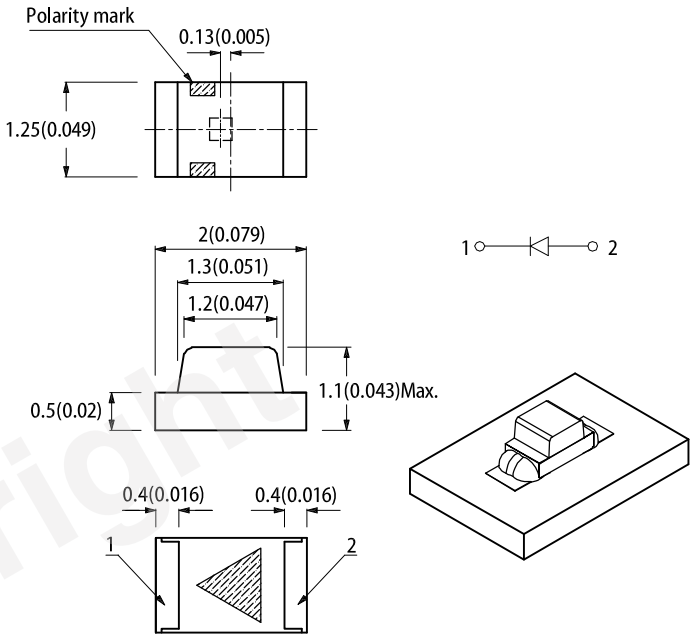

RECOMMENDED SOLDERING PATTERN
(units : mm; tolerance : ± 0.1)

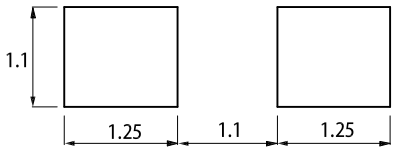

Notes:
1. All dimensions are in millimeters (inches).
2. Tolerance is ±0.1(0.004") unless otherwise noted.
3. The specifications, characteristics and technical data described in the datasheet are subject to change without prior notice.
4. The device has a single mounting surface. The device must be mounted according to the specifications.

SELECTION GUIDE

Part Number	Emitting Color (Material)	Lens Type	Iv (mcd) @ 20mA [2]		Viewing Angle [1]
			Min.	Typ.	2θ1/2
KP-2012SGC	Super Bright Green (GaP)	Water Clear	5	12	160°

Notes:
1. θ1/2 is the angle from optical centerline where the luminous intensity is 1/2 of the optical peak value.
2. Luminous intensity / luminous flux: +/-15%.
3. Luminous intensity value is traceable to CIE127-2007 standards.

© 2018 Kingbright. All Rights Reserved.

sales@prom-elec.com / ООО ПРОМЭЛЕКТРОНИКА

ELECTRICAL / OPTICAL CHARACTERISTICS at T_A=25°C

Parameter	Symbol	Emitting Color	Value		Unit
			Typ.	Max.	
Wavelength at Peak Emission I_F = 20mA	λ_{peak}	Super Bright Green	565	-	nm
Dominant Wavelength I_F = 20mA	λ_{dom} [1]	Super Bright Green	568	-	nm
Spectral Bandwidth at 50% Φ REL MAX I_F = 20mA	Δλ	Super Bright Green	30	-	nm
Capacitance	C	Super Bright Green	15	-	pF
Forward Voltage I_F = 20mA	V_F [2]	Super Bright Green	2.2	2.5	V
Reverse Current (V_R = 5V)	I_R	Super Bright Green	-	10	uA

Notes:
1. The dominant wavelength (λd) above is the setup value of the sorting machine. (Tolerance λd : ±1nm.)
2. Forward voltage: ±0.1V.
3. Wavelength value is traceable to CIE127-2007 standards.
4. Excess driving current and / or operating temperature higher than recommended conditions may result in severe light degradation or premature failure.

Kingbright

ABSOLUTE MAXIMUM RATINGS at T_A=25°C

Parameter	Symbol	Value	Unit
Power Dissipation	P_D	62.5	mW
Reverse Voltage	V_R	5	V
Junction Temperature	T_j	110	°C
Operating Temperature	T_{op}	-40 to +85	°C
Storage Temperature	T_{stg}	-40 to +85	°C
DC Forward Current	I_F	25	mA
Peak Forward Current	I_{FM} [1]	140	mA
Electrostatic Discharge Threshold (HBM)	-	8000	V

Notes:
1. 1/10 Duty Cycle, 0.1ms Pulse Width.
2. Relative humidity levels maintained between 40% and 60% in production area are recommended to avoid the build-up of static electricity – Ref JEDEC/JESD625-A and JEDEC/J-STD-033.

RoHS © 2018 Kingbright. All Rights Reserved.

TECHNICAL DATA

RELATIVE INTENSITY vs. WAVELENGTH

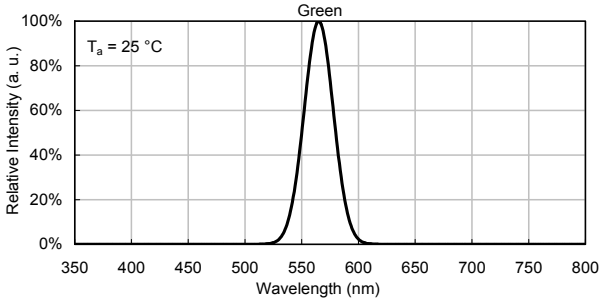

SPATIAL DISTRIBUTION

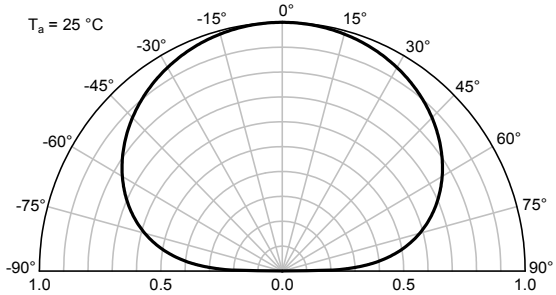

SUPER BRIGHT GREEN

Forward Current vs. Forward Voltage

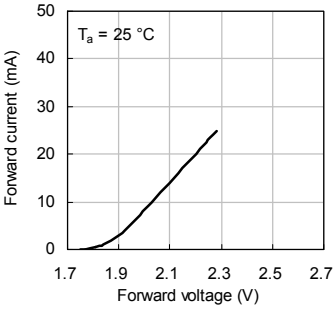

Luminous Intensity vs. Forward Current

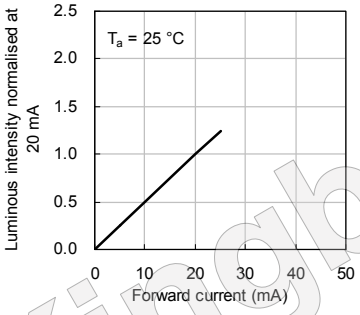

Forward Current Derating Curve

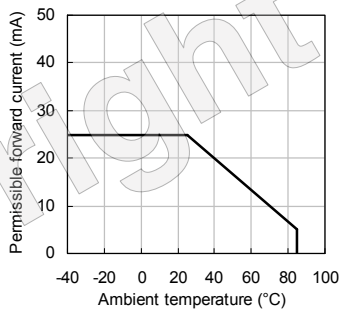

Luminous Intensity vs. Ambient Temperature

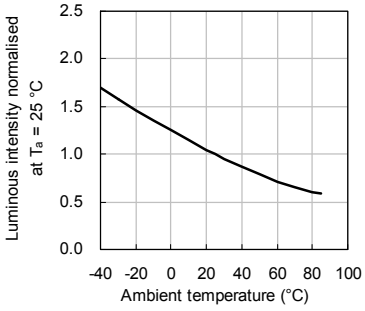

Kingbright

REFLOW SOLDERING PROFILE for LEAD-FREE SMD PROCESS

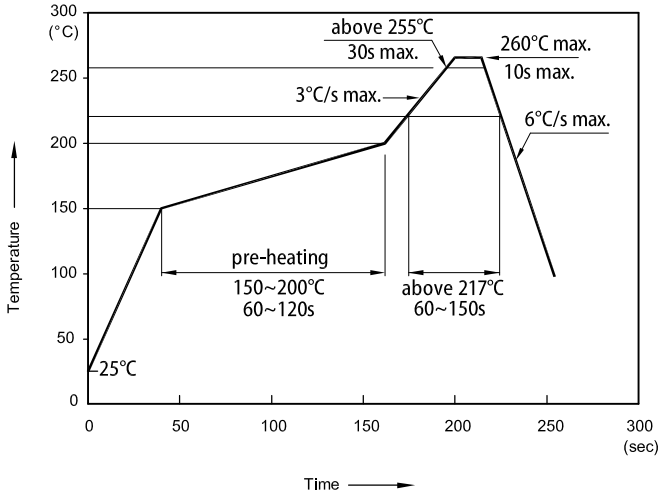

Notes:
1. Don't cause stress to the LEDs while it is exposed to high temperature.
2. The maximum number of reflow soldering passes is 2 times.
3. Reflow soldering is recommended. Other soldering methods are not recommended as they might cause damage to the product.

TAPE SPECIFICATIONS (units : mm)

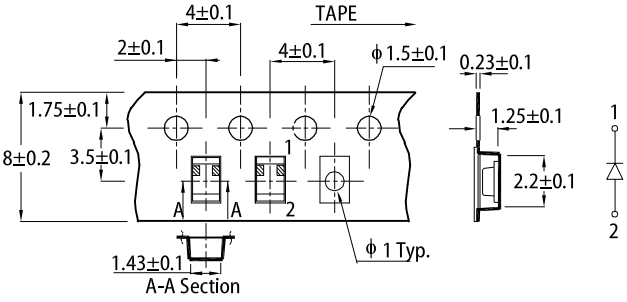

REEL DIMENSION (units : mm)

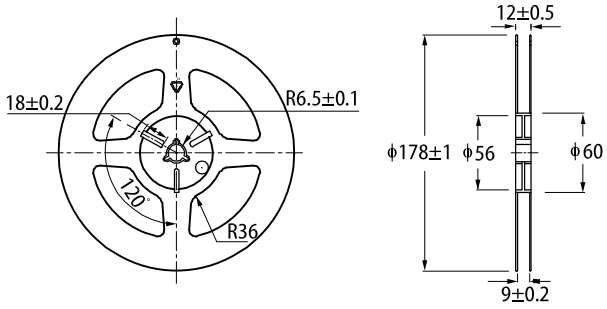

© 2018 Kingbright. All Rights Reserved.

PACKING & LABEL SPECIFICATIONS

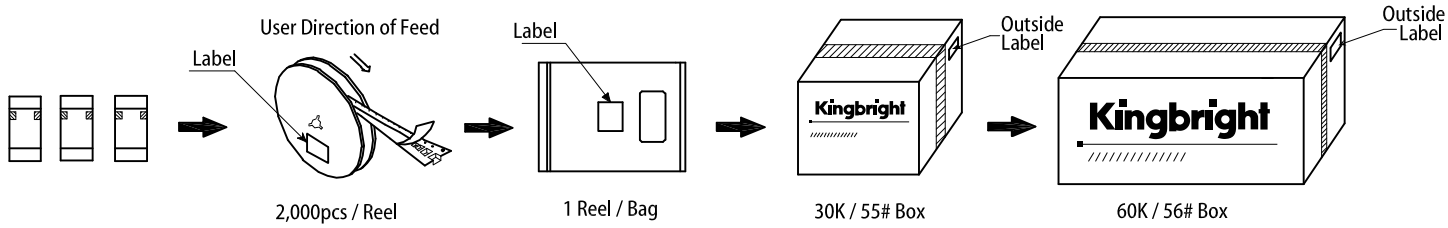

Kingbright

PRECAUTIONARY NOTES

1. The information included in this document reflects representative usage scenarios and is intended for technical reference only.
2. The part number, type, and specifications mentioned in this document are subject to future change and improvement without notice. Before production usage customer should refer to the latest datasheet for the updated specifications.
3. When using the products referenced in this document, please make sure the product is being operated within the environmental and electrical limits specified in the datasheet. If customer usage exceeds the specified limits, Kingbright will not be responsible for any subsequent issues.
4. The information in this document applies to typical usage in consumer electronics applications. If customer's application has special reliability requirements or have life-threatening liabilities, such as automotive or medical usage, please consult with Kingbright representative for further assistance.
5. The contents and information of this document may not be reproduced or re-transmitted without permission by Kingbright.
6. All design applications should refer to Kingbright application notes available at http://www.Kingbright.com/application_notes

RoHS © 2018 Kingbright. All Rights Reserved.