Kingbright

Optoelectronic Components

TECHNICAL NOTES

SMD Tape Specifications	94
Recommended Soldering Pattern	103
Technical Data	108
Bin Code Systems	123
Application Notes	125
CIE chromaticity Diagram	129
Index	131

■ Quality ■ Efficiency ■ Service ■ Innovation

2016-2018

sales@prom-elec.com / ООО ПРОМЭЛЕКТРОНИКА

SMD TAPE SPECIFICATIONS

Reel Dimensions	Part Number			Reel Dimensions	Part Number	Reel Dimensions	Part Number
7” (for 8mm width tape)	KA-2214 KA-2810A KA-3021 KM-23-F KM-23xxx KP-1608 KP-2012 KP-3216 KPA-1606 KPA-2107 KPA-3010 KPA-3210 KPB-3025 KPBA-3010 KPBD-3224 KPBDA-3020-PF KPBL-3025 KPC-1608 KPD-3224 KPFA-2507 KPFA-3010 KPFA-3011 KPG-0603 KPG-1005	KPG-1608 KPG1-1608 KPGA-1602 KPGF-0606 KPGF-1011 KPH-1608 KPHB-1608 KPHBM-2012 KPHCM-2012 KPHD-1608 KPHHS-1005 KPHM-1608 KPL-3015 KPPA-3010 KPS-3227SP1C KPT-1608 KPT-2012 KPT-3216 KPTB-1612 KPTB-1615 KPTBD-3216 KPTC-3212 KPTD-1608 KPTD-3216	KPTF-1616 KPTL-3216 KPTR-3216	7” (for 12mm width tape)	KA-3022-4.5SF KA3030 KA-3528 KA-3529A KA-4008 KA-4040 KA-5630 KAA-3528 KAA-3528-C8-CC KAAF-3529 KAAF-5050-13 KM2520xxx03 KM2520xxx08 KM2520xxx09 KPED-3528 KPS-5130PD7C KTDS-3536	13” (for 12mm width tape)	KA-3535
						13” (for 24mm width tape)	KCDX02 KCDX03 KCSX02 KCSX03 KCSX04
						13” (for 32mm width tape)	KCDX04 KCDX39 KCDX51 KCPDX04 KCPSX04 KCSX39 KCSX51 KCSX56
						13” (for 44mm width tape)	KCDX56

7"(for 8mm width tape)

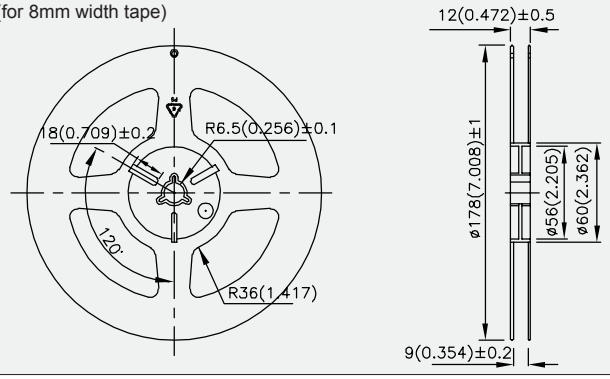

7"(for 12mm width tape)

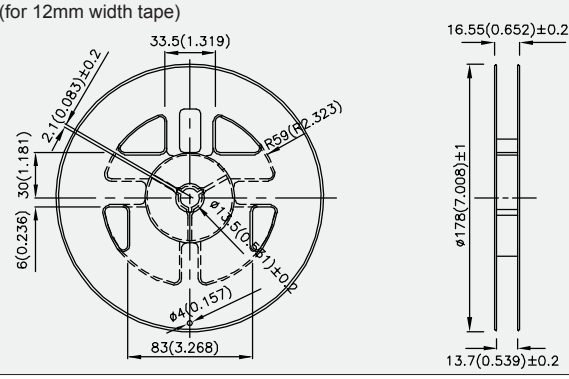

13”(for 12mm width tape)

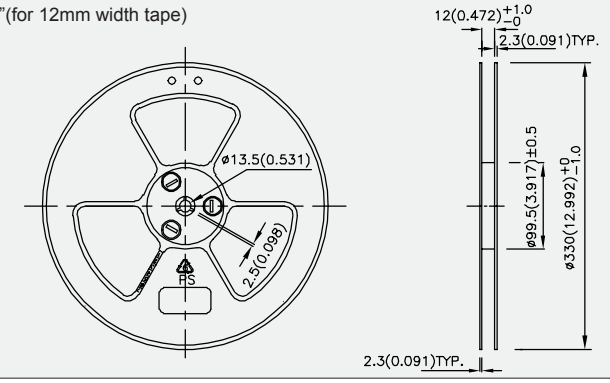

13”(for 24mm width tape)

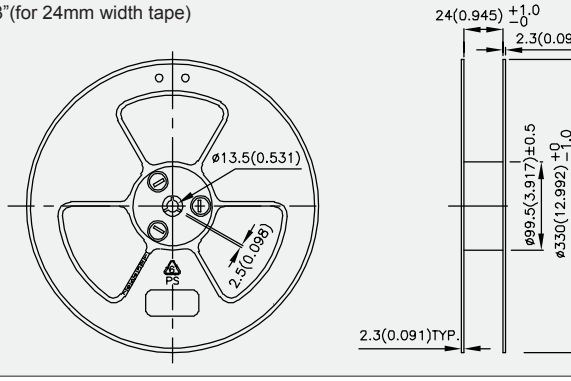

13”(for 32mm width tape)

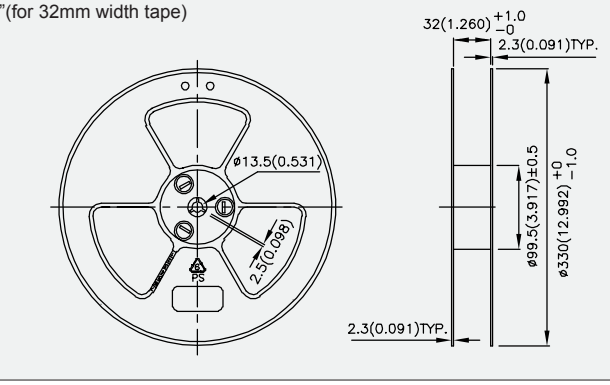

13”(for 44mm width tape)

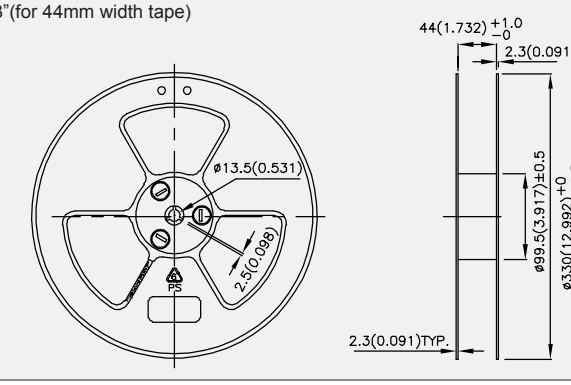

NOTE: 1. All dimensions are in millimeters(inches).

SMD TAPE SPECIFICATIONS

KA-2214 | **PACKAGE: 2000PCS / REEL**

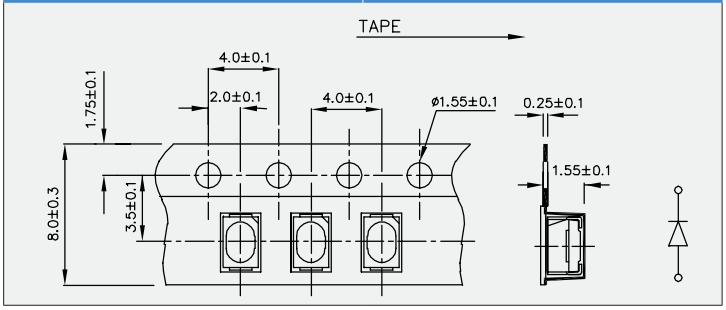

KA-2810A | **PACKAGE: 2000PCS / REEL**

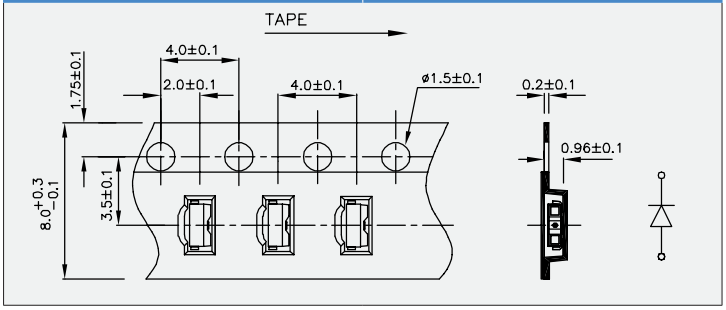

KA-3021 | **PACKAGE: 2000PCS / REEL**

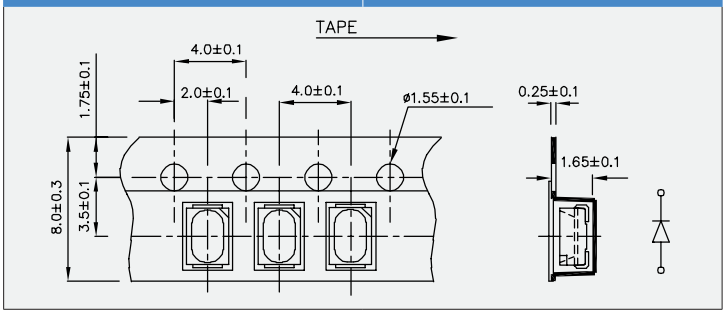

KA-3022-4.5SF | **PACKAGE: 1500PCS / REEL**

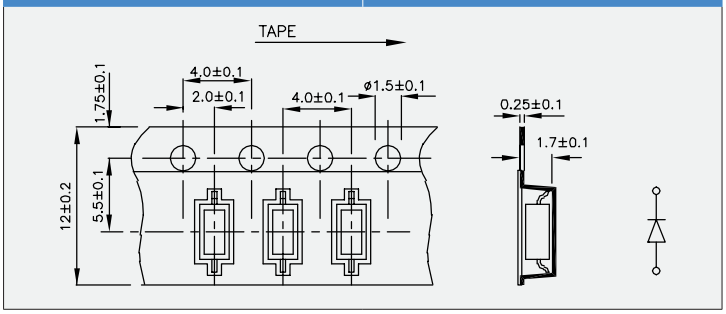

KA3030 | **PACKAGE: 2000PCS / REEL**

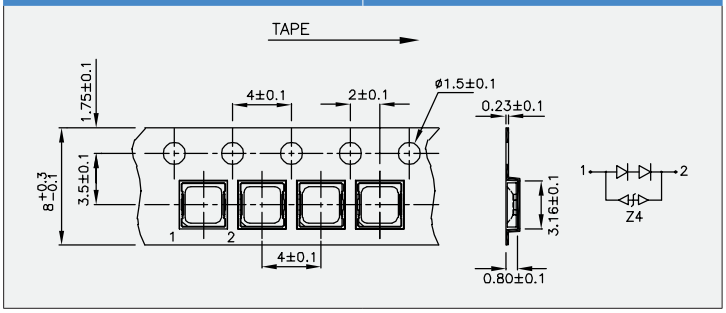

KA-3528 | **PACKAGE: 1500PCS / REEL**

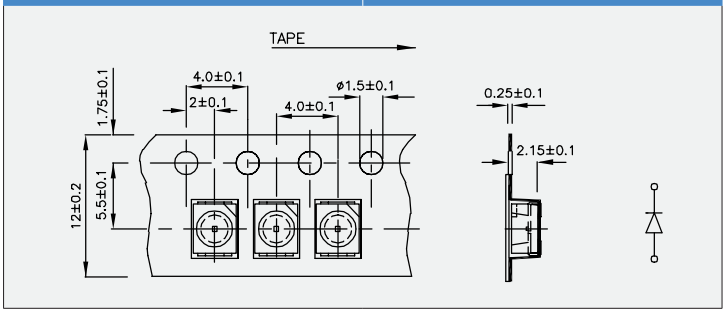

KA-3529A | **PACKAGE: 1500PCS / REEL**

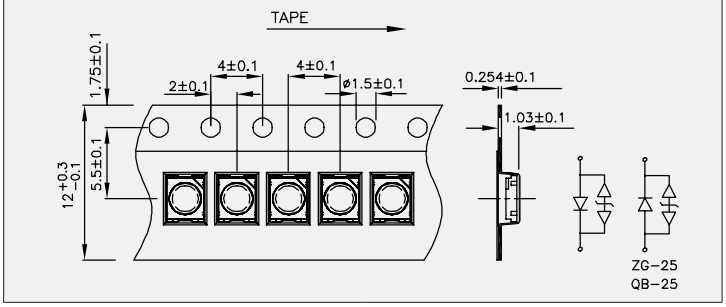

KA-3535 | **PACKAGE: 2000PCS / REEL**

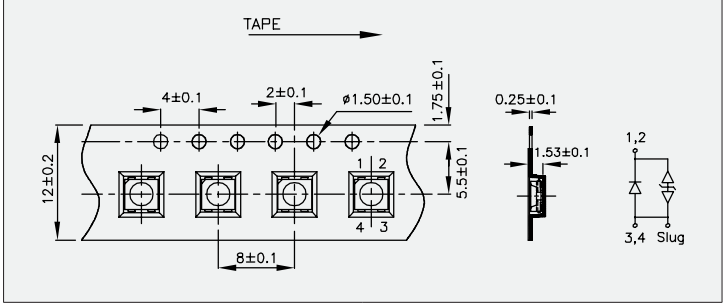

KA-4008 | **PACKAGE: 2000PCS / REEL**

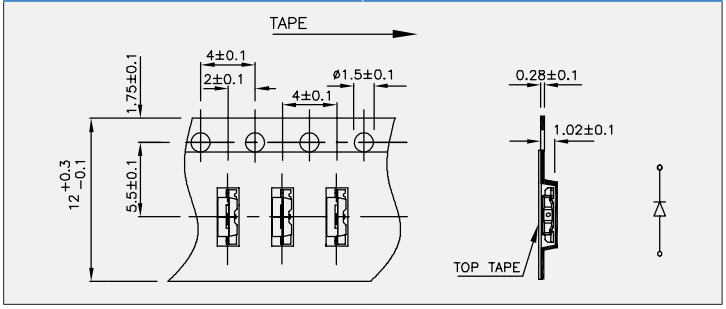

KA-4040 | **PACKAGE: 500PCS / REEL**

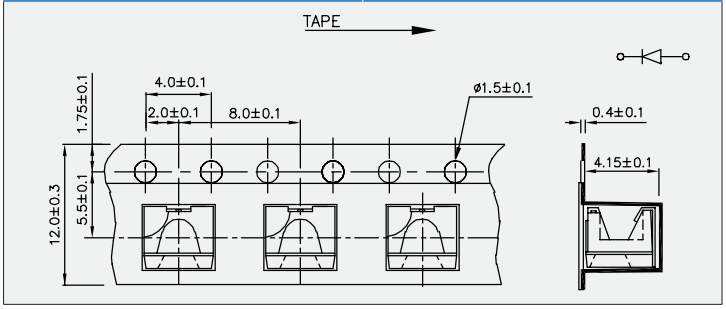

NOTE: 1. All dimensions are in millimeters.

SMD TAPE SPECIFICATIONS

KA-5630	PACKAGE: 2000PCS / REEL

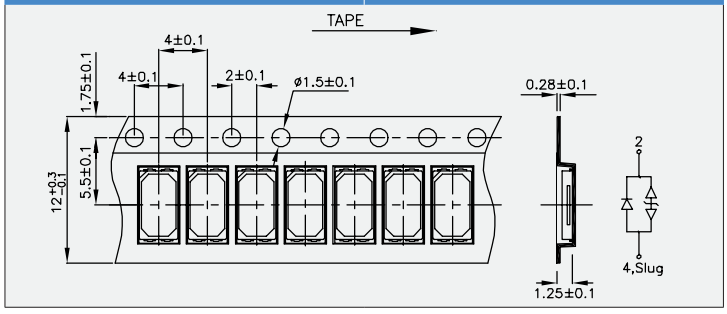

KAA-3528	PACKAGE: 1500PCS / REEL

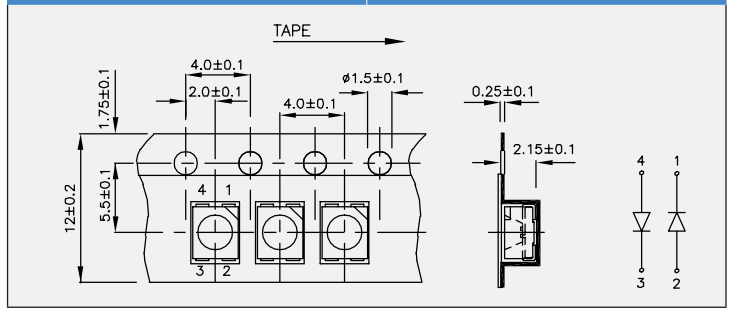

KAA-3528-C8-CC	PACKAGE: 1500PCS / REEL

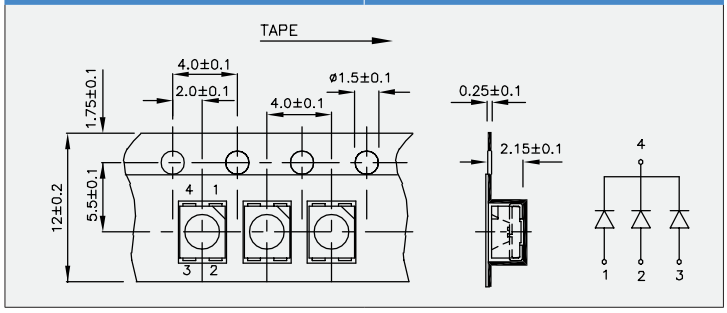

KAAF-3529	PACKAGE: 2000PCS / REEL

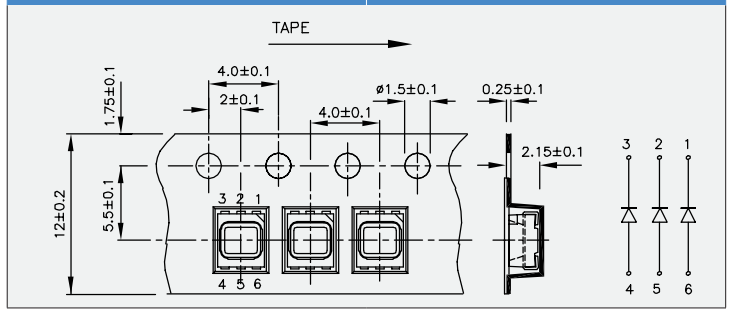

KAAF-5050	PACKAGE: 500PCS / REEL

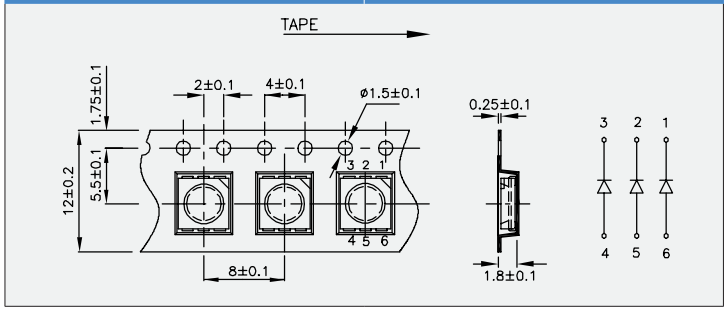

KCDX02	PACKAGE: 300PCS / REEL

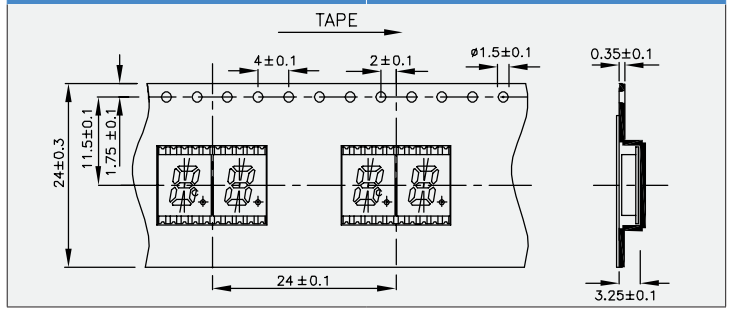

KCDX03	PACKAGE: 300PCS / REEL

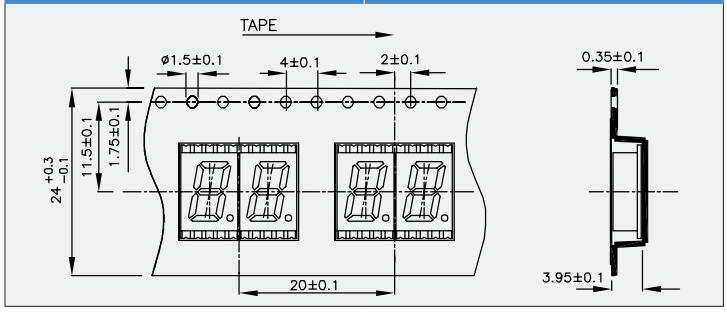

KCDX04	PACKAGE: 250PCS / REEL

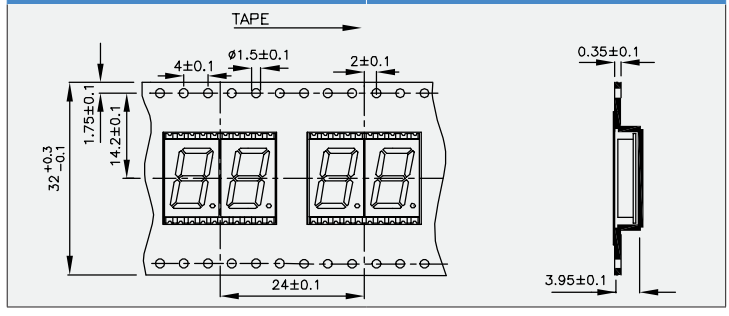

KCDX39	PACKAGE: 250PCS / REEL

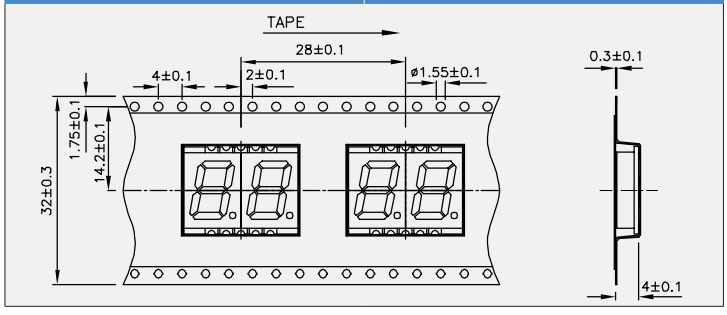

KCDX51	PACKAGE: 200PCS / REEL

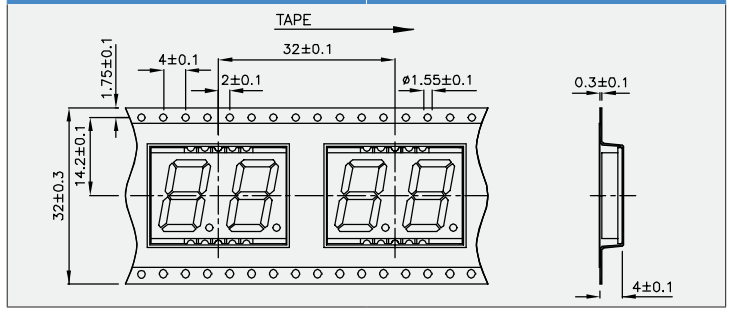

NOTE: 1. All dimensions are in millimeters.

SMD TAPE SPECIFICATIONS

KCDX56 | **PACKAGE: 200PCS / REEL**

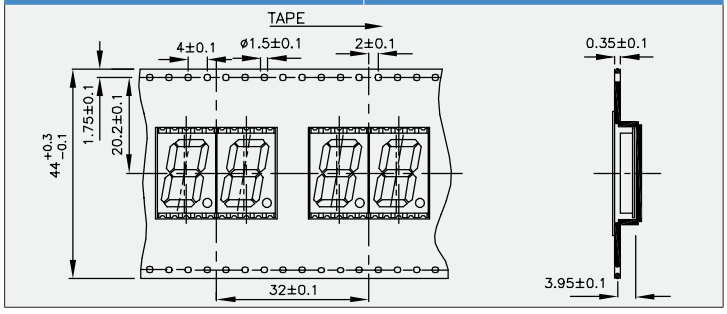

KCPDX04 | **PACKAGE: 250PCS / REEL**

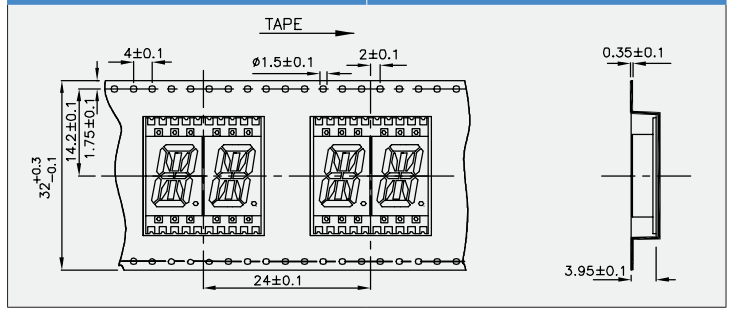

KCPSX04 | **PACKAGE: 400PCS / REEL**

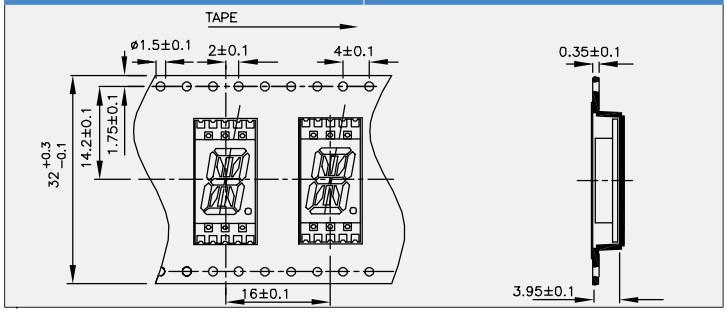

KCSX02 | **PACKAGE: 650PCS / REEL**

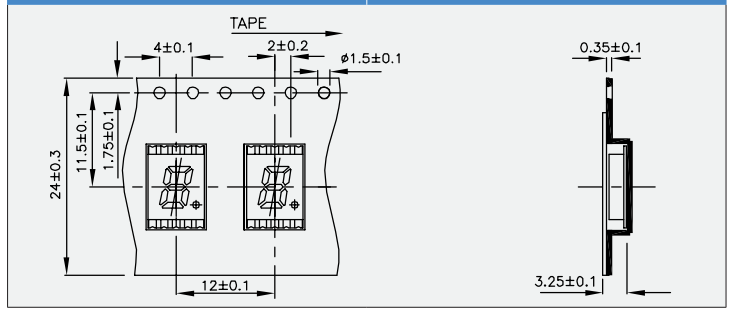

KCSX03 | **PACKAGE: 550PCS / REEL**

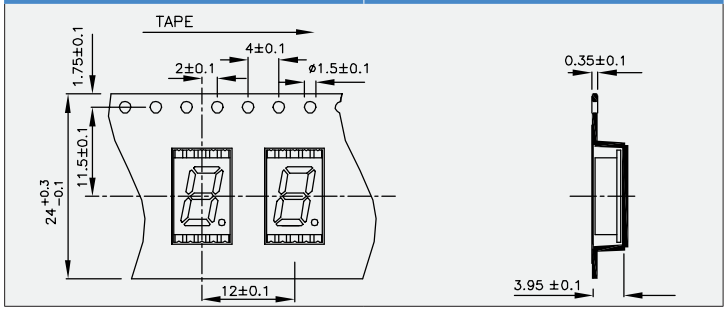

KCSX04 | **PACKAGE: 400PCS / REEL**

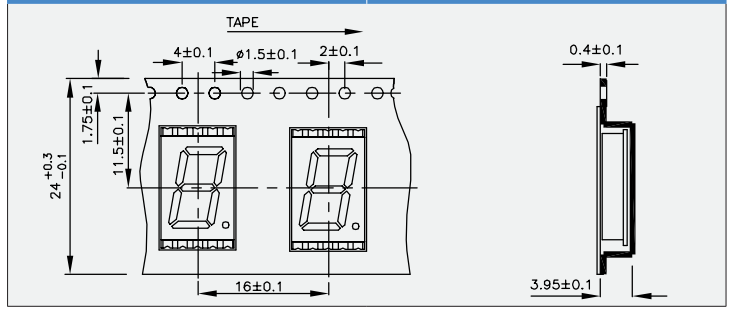

KCSX39 | **PACKAGE: 400PCS / REEL**

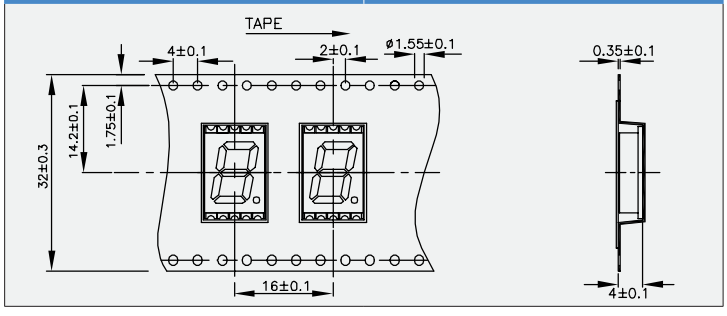

KCSX51 | **PACKAGE: 400PCS / REEL**

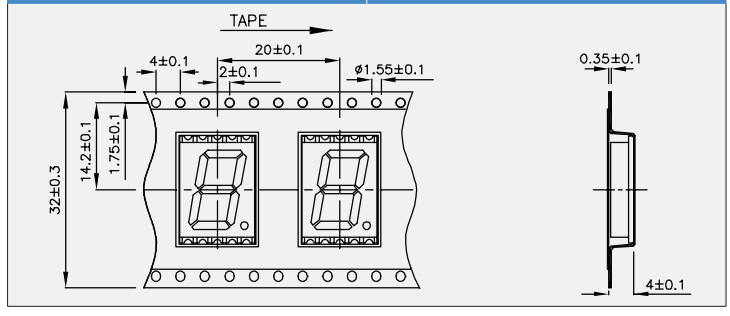

KCSX56 | **PACKAGE: 400PCS / REEL**

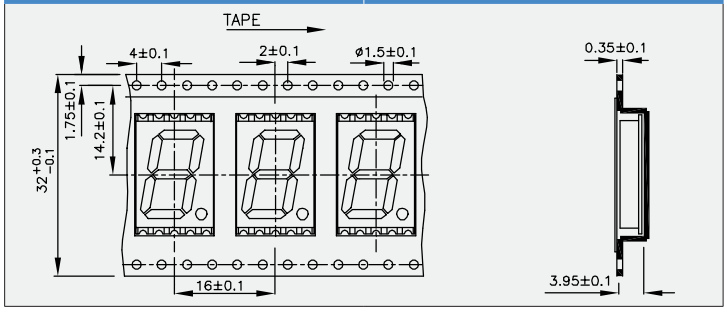

KM-23-F, KM-23xxxx | **PACKAGE: 2000PCS / REEL**

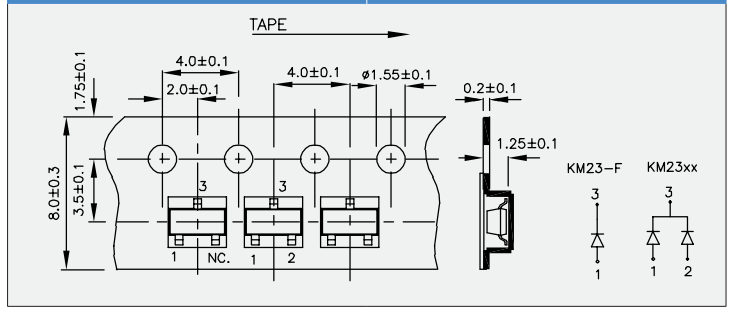

NOTE: 1. All dimensions are in millimeters.

SMD TAPE SPECIFICATIONS

KM2520xxx03	PACKAGE: 1000PCS / REEL

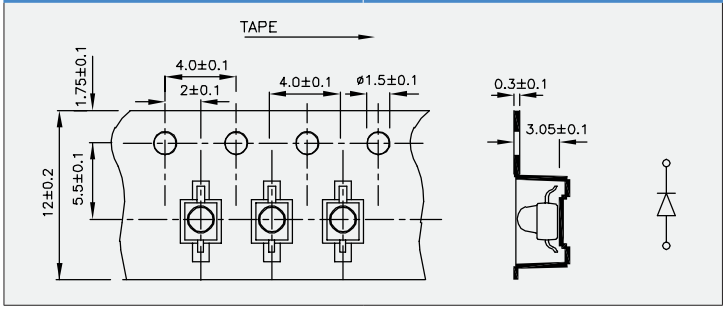

KM2520xxx08	PACKAGE: 1000PCS / REEL

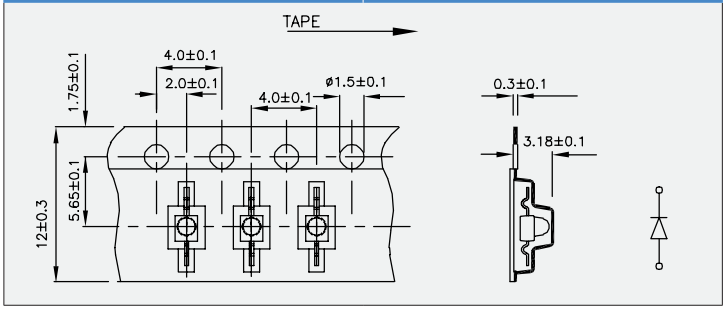

KM2520xxx09	PACKAGE: 1000PCS / REEL

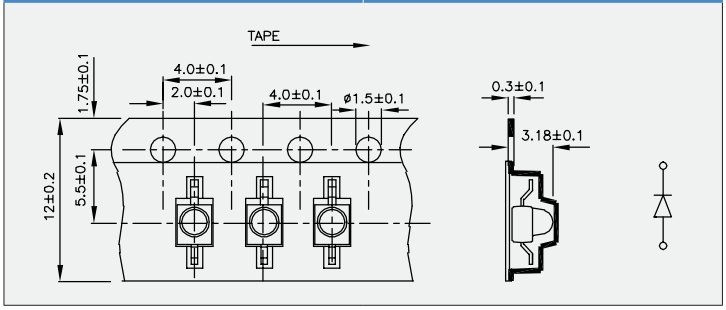

KP-1608	PACKAGE: 2000PCS / REEL

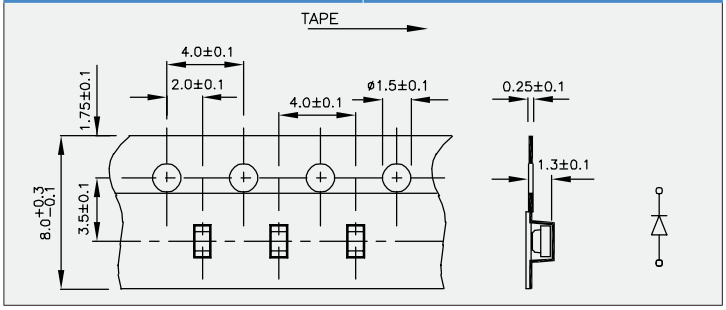

KP-2012	PACKAGE: 2000PCS / REEL

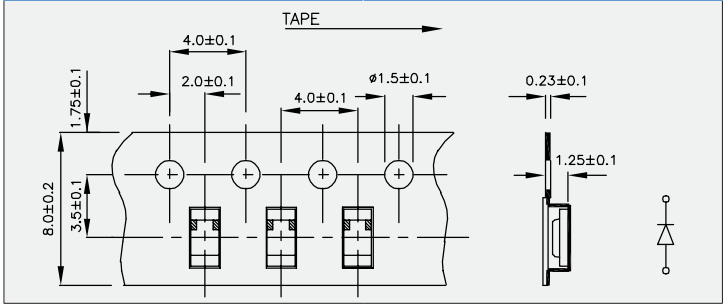

KP-3216	PACKAGE: 2000PCS / REEL

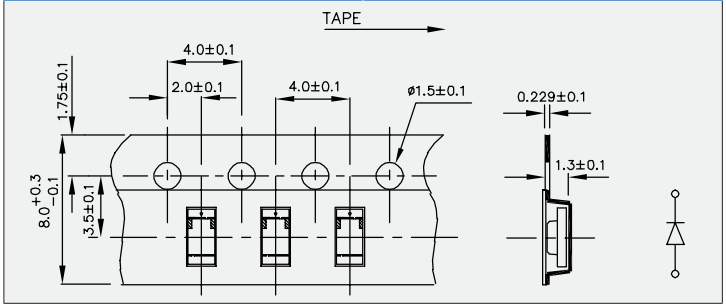

KPA-1606	PACKAGE: 2000PCS / REEL

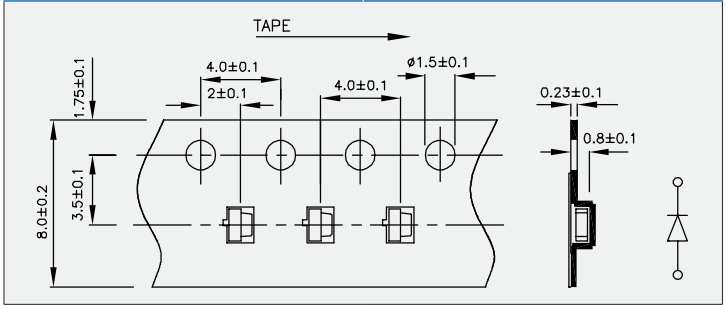

KPA-2107	PACKAGE: 2000PCS / REEL

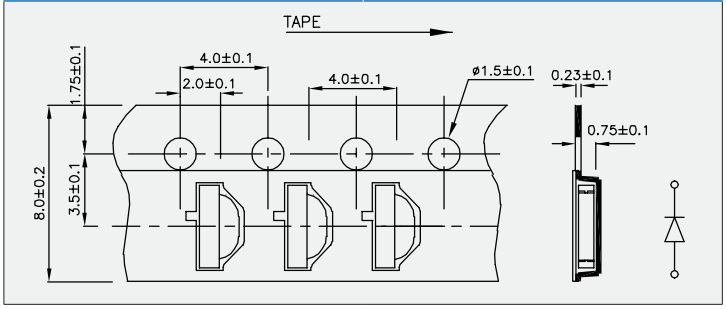

KPA-3010	PACKAGE: 2000PCS / REEL

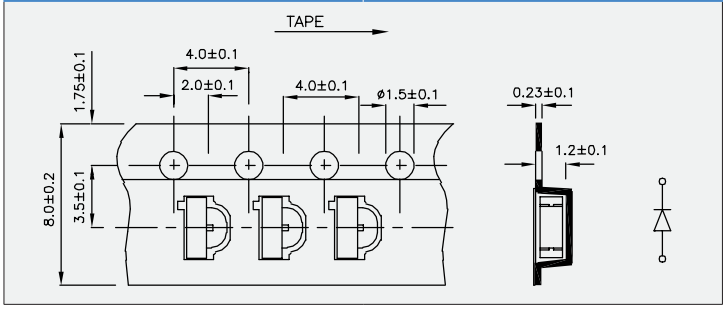

KPA-3210	PACKAGE: 2000PCS / REEL

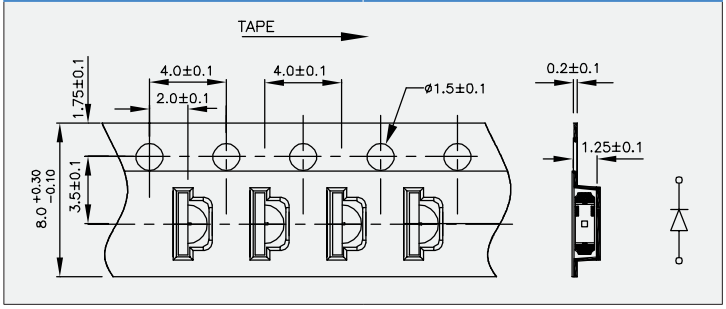

NOTE: 1. All dimensions are in millimeters.

SMD TAPE SPECIFICATIONS

KPB-3025 | **PACKAGE: 2000PCS / REEL**

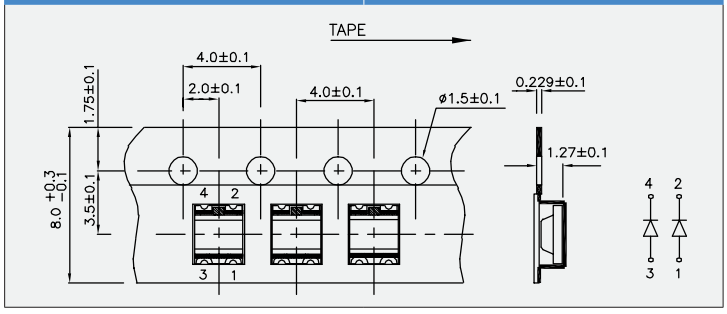

KPBA-3010 | **PACKAGE: 2000PCS / REEL**

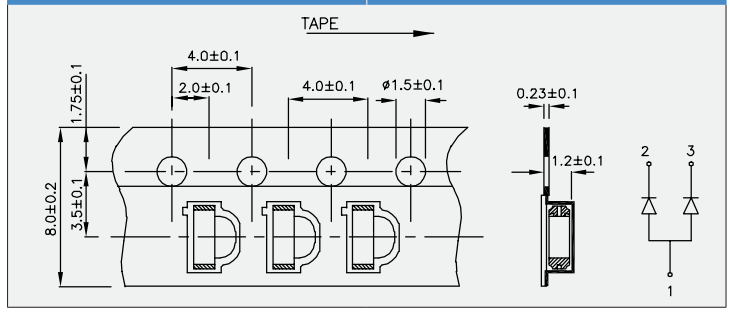

KPBD-3224 | **PACKAGE: 1500PCS / REEL**

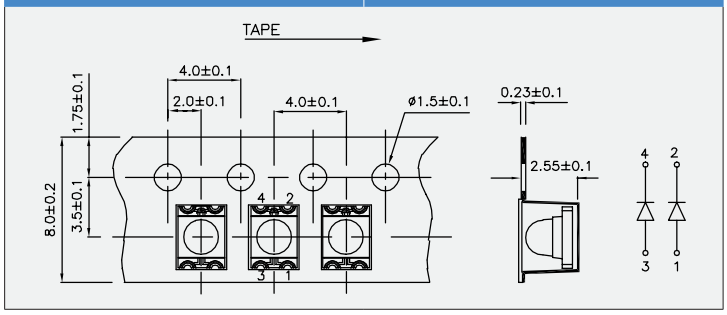

KPBDA-3020-PF | **PACKAGE: 2000PCS / REEL**

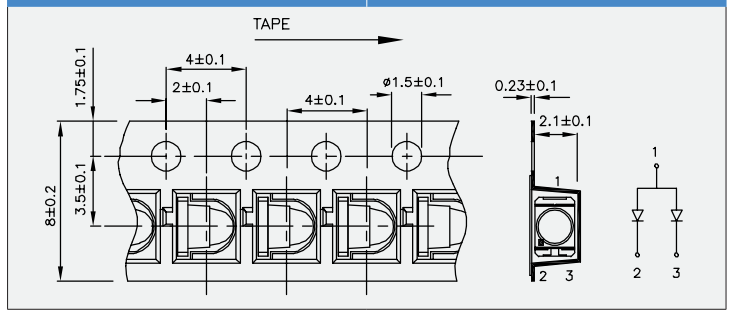

KPBL-3025 | **PACKAGE:2000PCS / REEL**

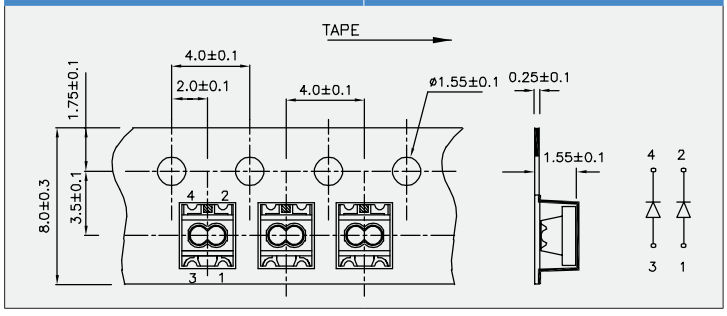

KPC-1608 | **PACKAGE: 3000PCS / REEL**

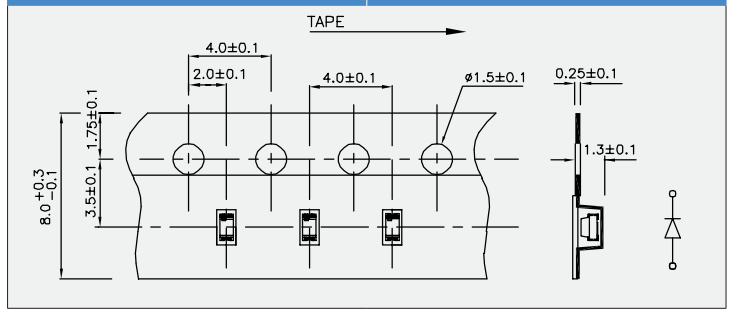

KPD-3224 | **PACKAGE: 1500PCS / REEL**

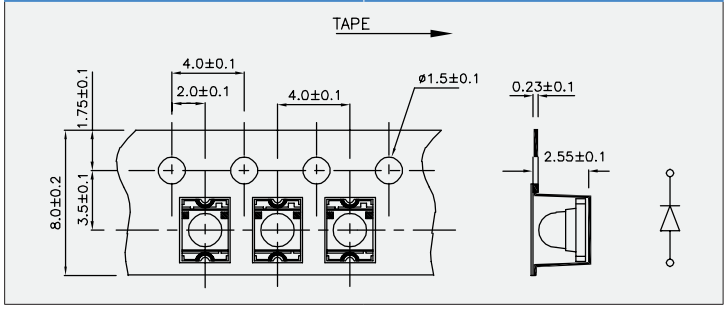

KPED-3528 | **PACKAGE: 500PCS / REEL**

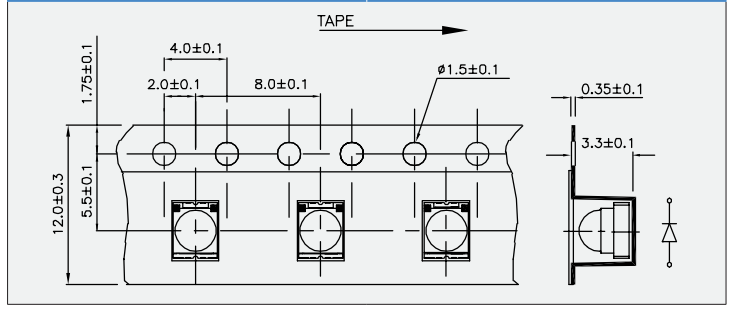

KPFA-2507 | **PACKAGE: 3000PCS / REEL**

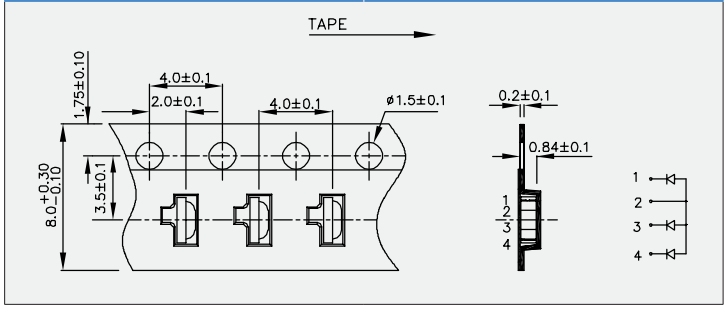

KPFA-3010 | **PACKAGE: 2000PCS / REEL**

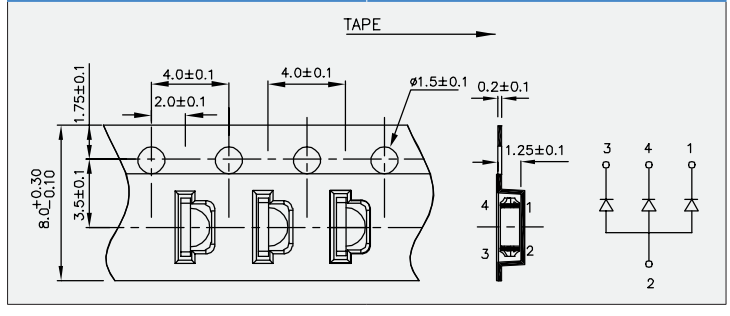

NOTE: 1. All dimensions are in millimeters.

SMD TAPE SPECIFICATIONS

KPFA-3011	PACKAGE: 2000PCS / REEL

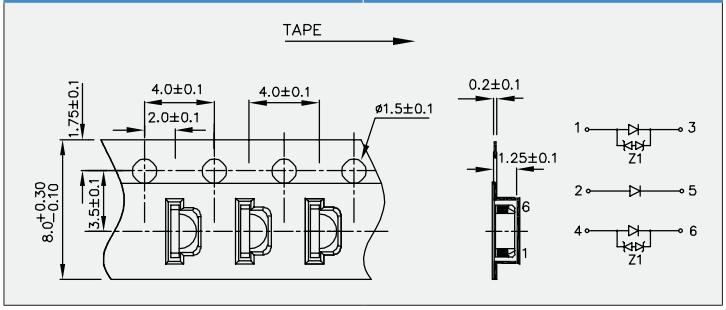

KPG-0603	PACKAGE: 4000PCS / REEL

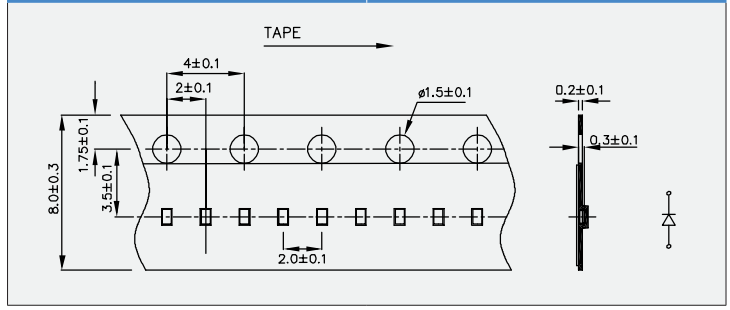

KPG-1005	PACKAGE: 4000PCS / REEL

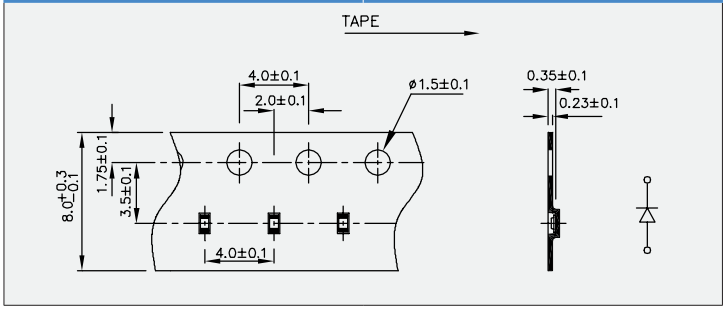

KPG-1608	PACKAGE: 2000PCS / REEL

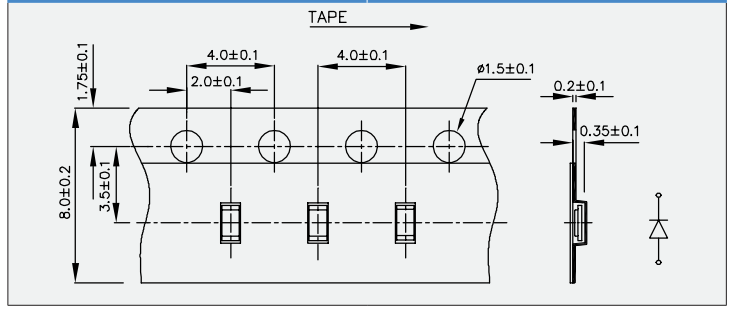

KPG1-1608	PACKAGE: 4000PCS / REEL

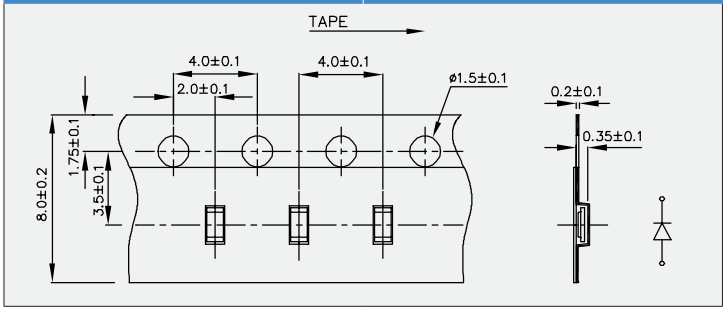

KPGA-1602	PACKAGE: 2000PCS / REEL

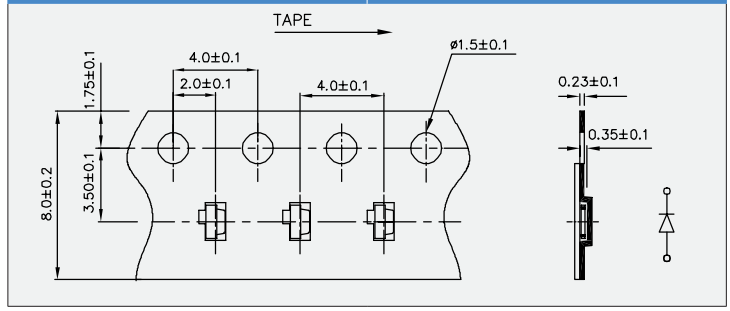

KPGF-0606	PACKAGE: 4000PCS / REEL

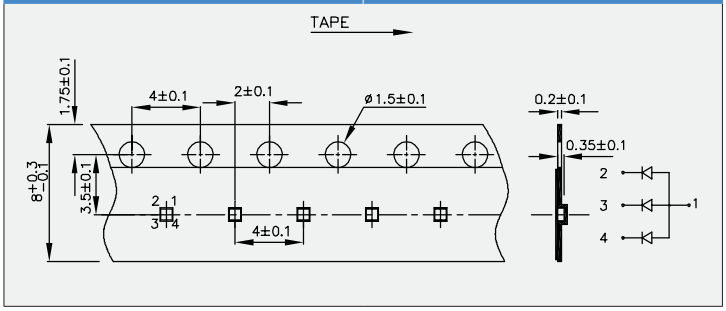

KPGF-1011	PACKAGE: 4000PCS / REEL

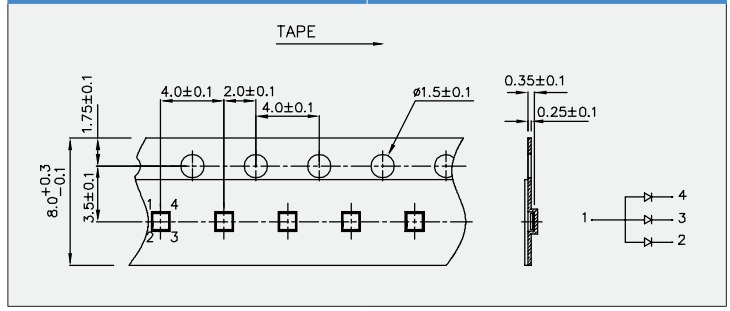

KPH-1608	PACKAGE: 2000PCS / REEL

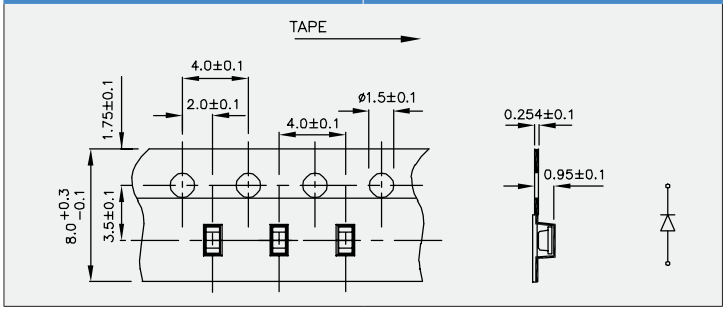

KPHB-1608	PACKAGE: 2000PCS / REEL

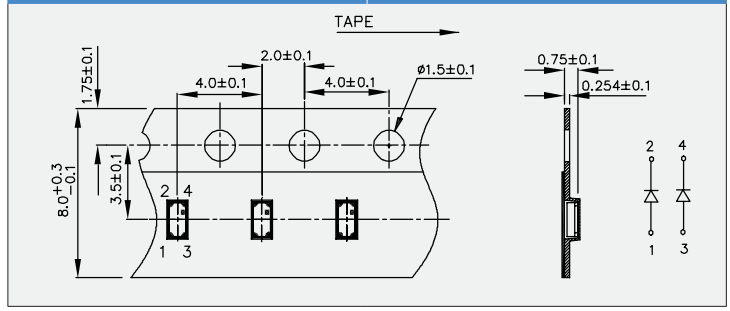

NOTE: 1. All dimensions are in millimeters.

SMD TAPE SPECIFICATIONS

KPHBM-2012 | **PACKAGE: 2000PCS / REEL**

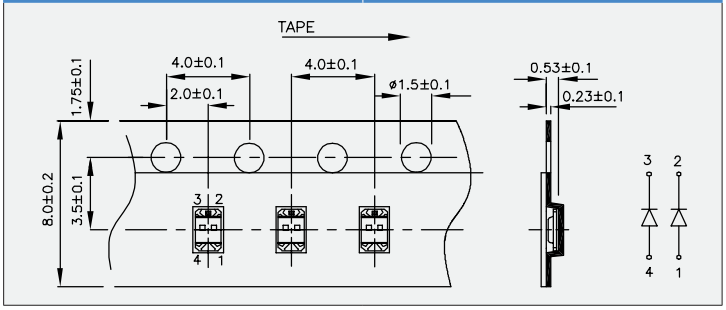

KPHCM-2012 | **PACKAGE: 2000PCS / REEL**

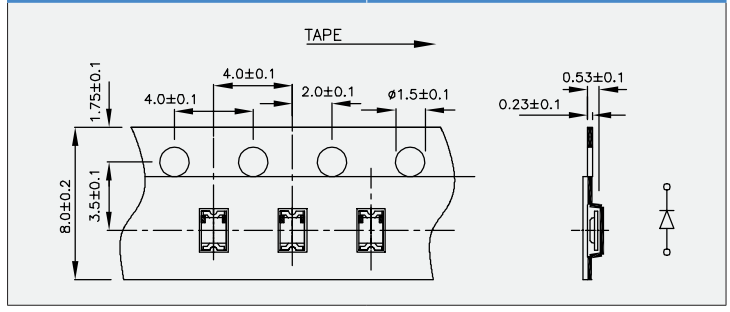

KPHD-1608 | **PACKAGE: 4000PCS / REEL**

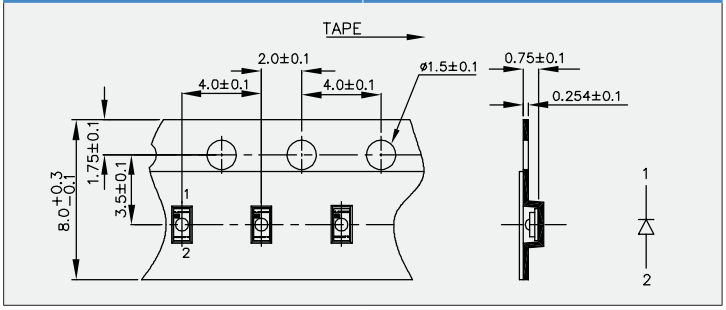

KPHHS-1005 | **PACKAGE: 2000PCS / REEL**

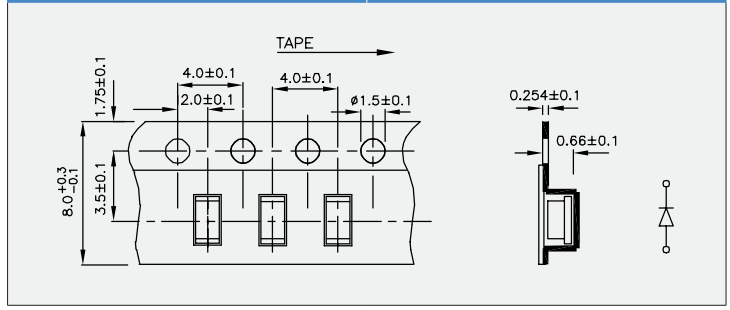

KPHD-1608 | **PACKAGE: 2000PCS / REEL**

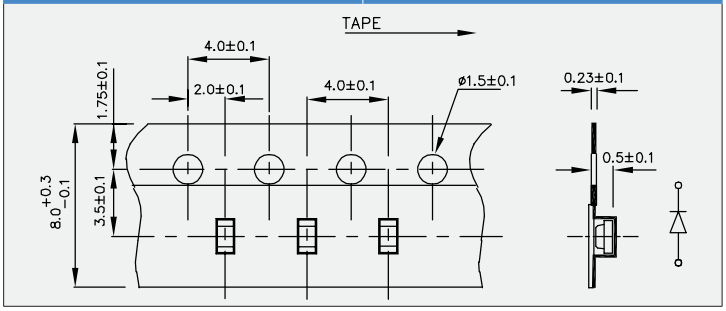

KPL-3015 | **PACKAGE: 2000PCS / REEL**

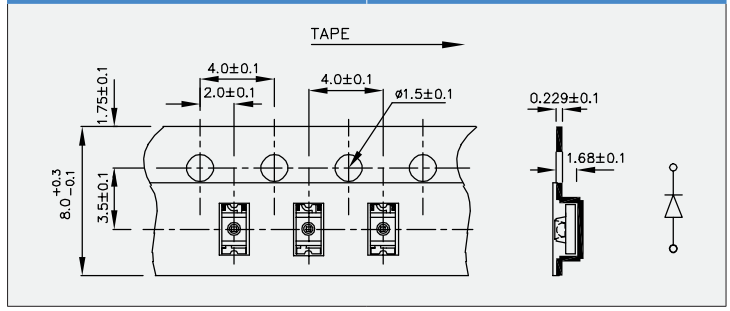

KPPA-3010 | **PACKAGE: 2000PCS / REEL**

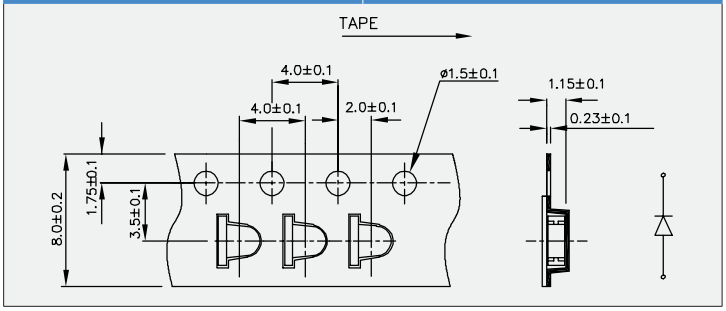

KPS-3227 | **PACKAGE: 200PCS / REEL**

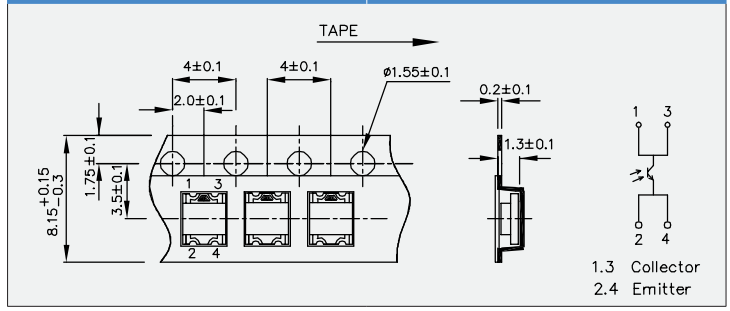

KPS-5130 | **PACKAGE: 1500PCS / REEL**

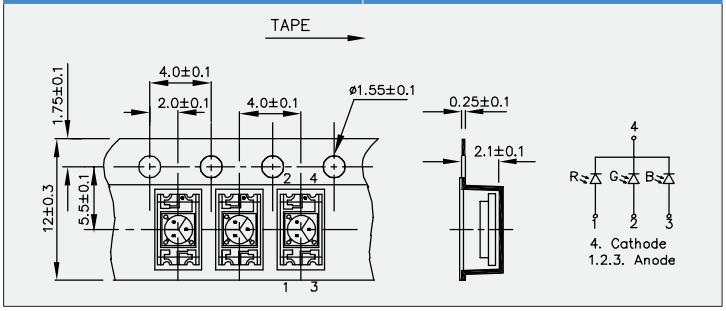

KPT-1608 | **PACKAGE: 2000PCS / REEL**

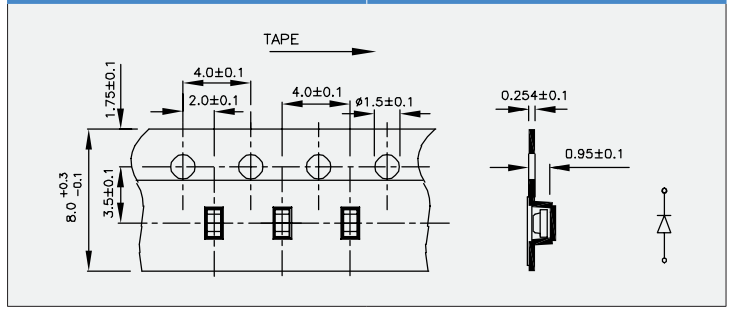

NOTE: 1. All dimensions are in millimeters.

SMD TAPE SPECIFICATIONS

KPT-2012	PACKAGE: 2000PCS / REEL

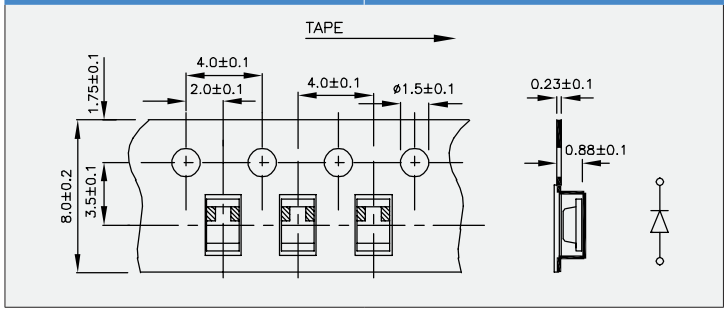

KPT-3216	PACKAGE: 2000PCS / REEL

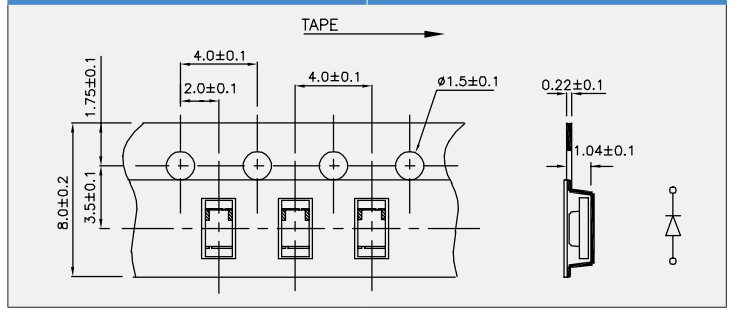

KPTB-1612	PACKAGE: 2000PCS / REEL

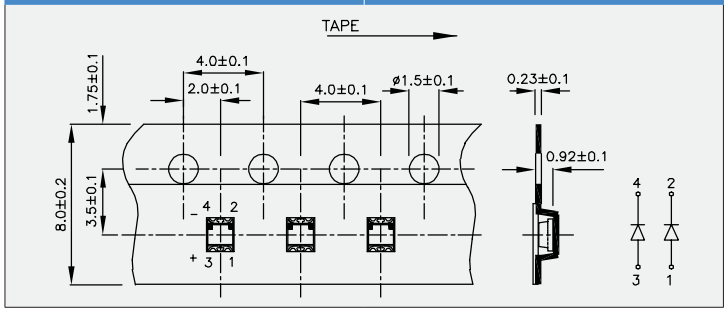

KPTB-1615	PACKAGE: 2000PCS / REEL

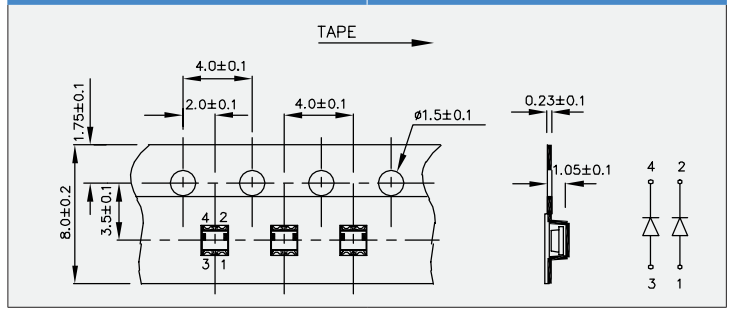

KPTBD-3216	PACKAGE: 2000PCS / REEL

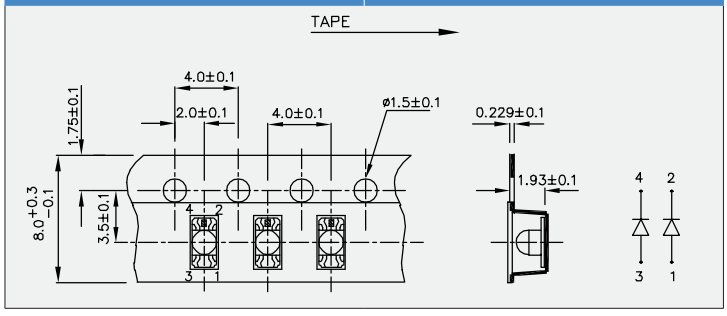

KPTC-3212-01	PACKAGE: 2000PCS / REEL

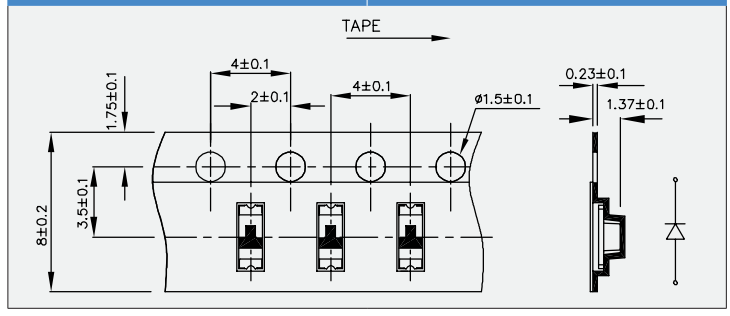

KPTD-1608	PACKAGE: 2000PCS / REEL

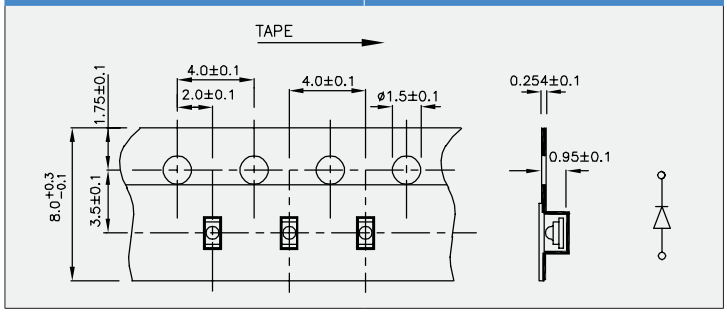

KPTD-3216	PACKAGE: 2000PCS / REEL

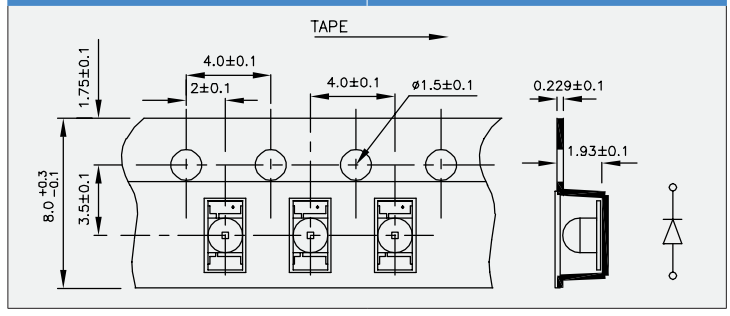

KPTF-1616RGBC-11	PACKAGE: 2000PCS / REEL

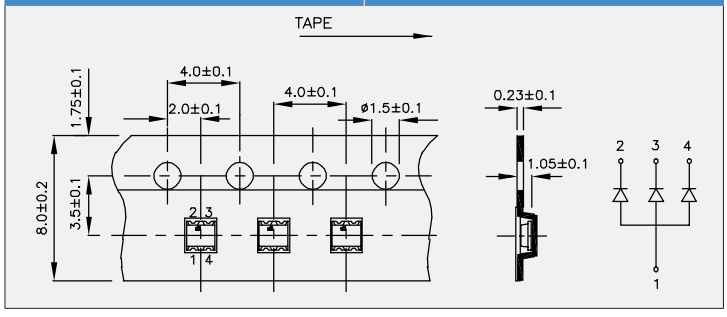

KPTL-3216	PACKAGE: 2000PCS / REEL

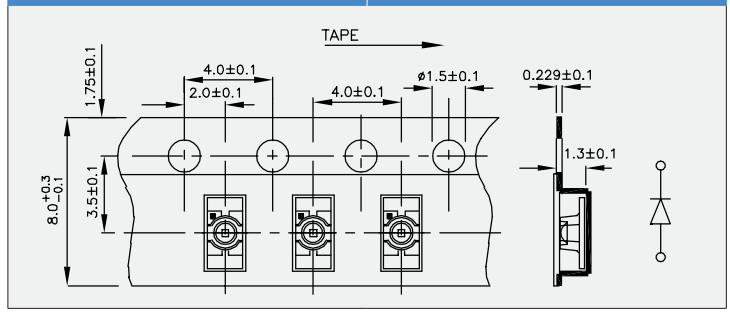

NOTE: 1. All dimensions are in millimeters.

SMD TAPE SPECIFICATIONS

KPTR-3216	PACKAGE: 2000PCS / REEL

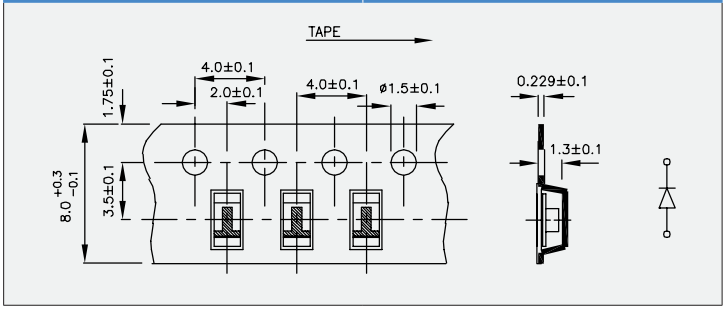

KTDS-3536	PACKAGE: 1000PCS / REEL

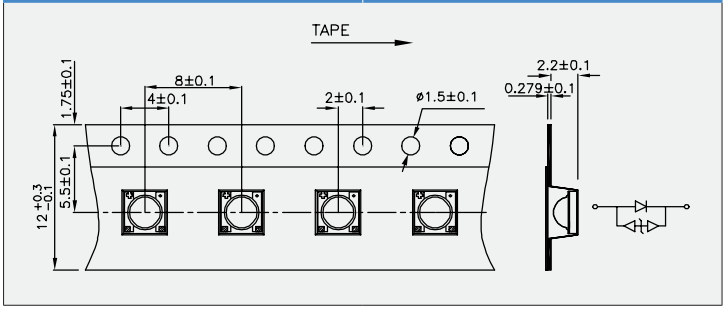

RECOMMENDED SOLDERING PATTERN

KA-2214

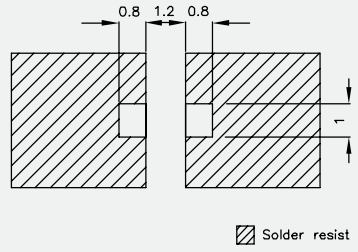

KA-2810A

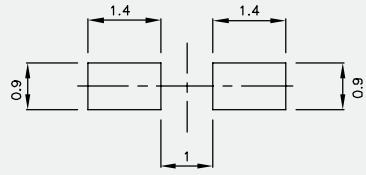

KA-3021

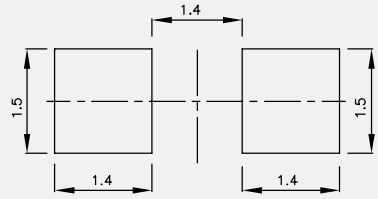

KA-3022-4.5SF

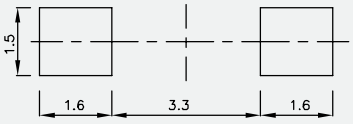

KA3030

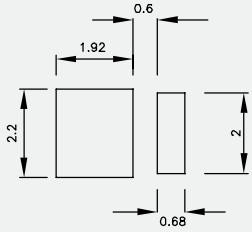

KA-3528

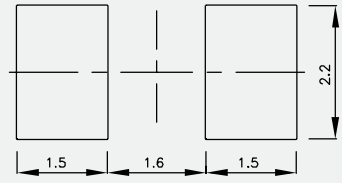

KA-3529A

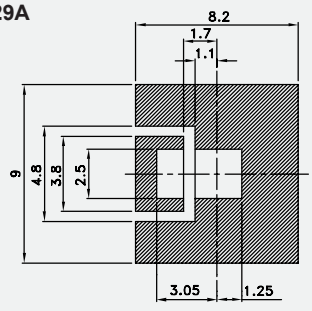

KA-3535

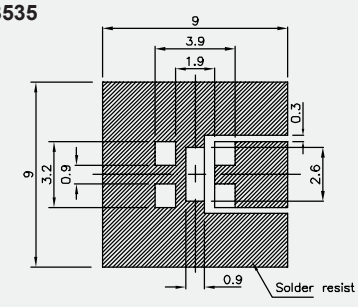

KA-4008

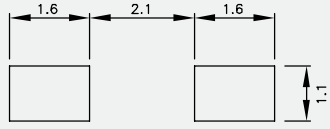

KA-4040

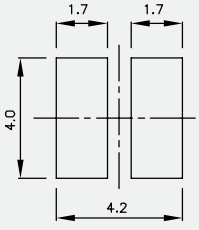

KA-5630

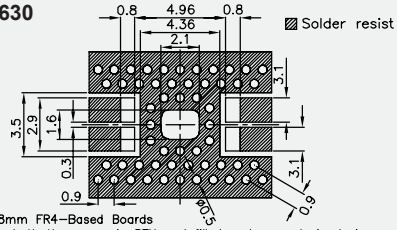

0.8mm FR4–Based Boards
For both the open via PTH and filled and capped via design, the finished hole diameter is 0.5mm. A smaller diameter will lead to an increase of thermal resistance. The recommended distance between two holes is 0.4 mm.This results in a minimal pitch of 0.9mm between the vias.

KAA-3528

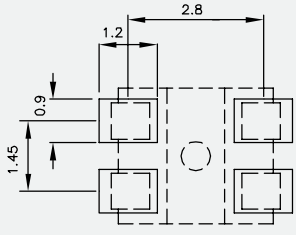

NOTES:
1. All dimensions are in millimeters.
2. Tolerance is ±0.1mm unless otherwise noted.

RECOMMENDED SOLDERING PATTERN

KAA-3528

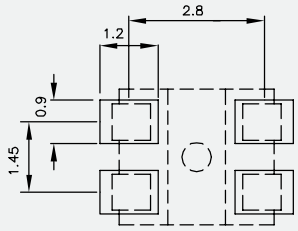

Tolerance: ± 0.1

KAAF-3529

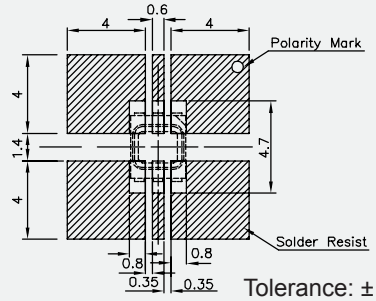

Tolerance: ± 0.1

KAAF-5050

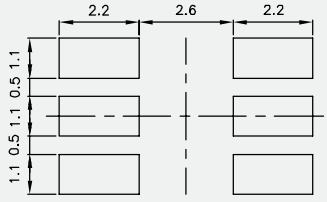

Tolerance: ± 0.1

KCDX02

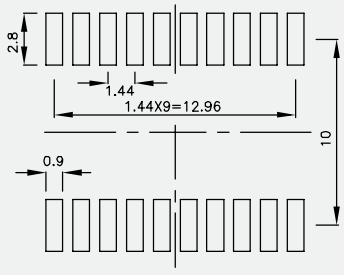

KCDX03

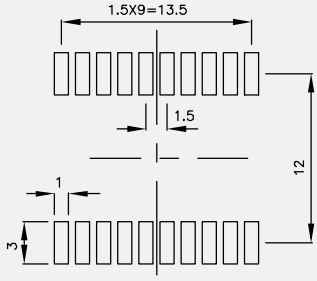

KCDX04

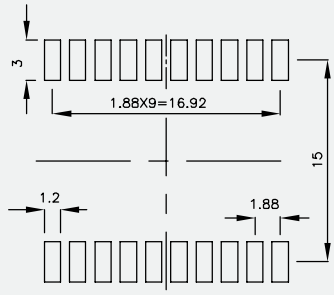

KCDX39

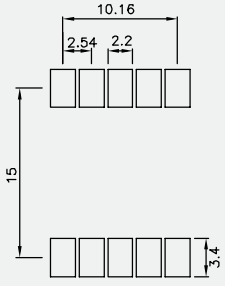

KCDX51

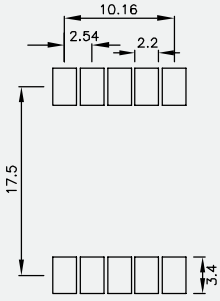

KCDX56

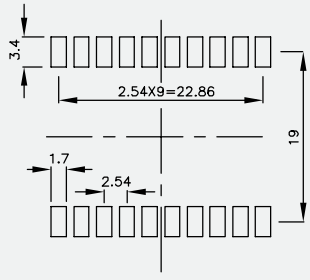

KCPDX04

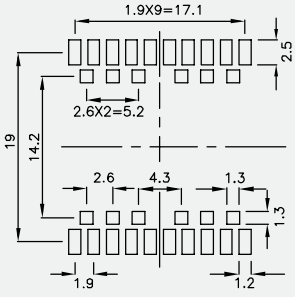

KCPSX04

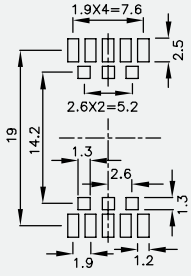

KCSX02

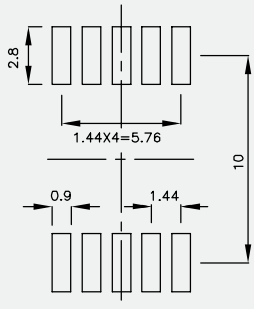

KCSX03

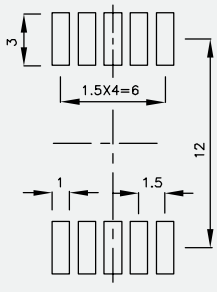

KCSX04

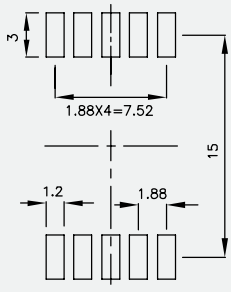

KCSX39

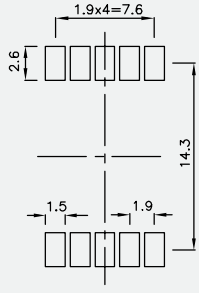

NOTES:
1. All dimensions are in millimeters.
2. Tolerance is ±0.15mm unless otherwise noted.

RECOMMENDED SOLDERING PATTERN

KCSX51

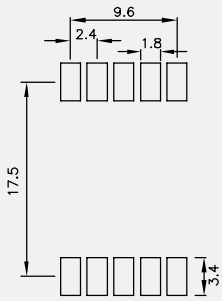

Tolerance: ± 0.15

KCSX56

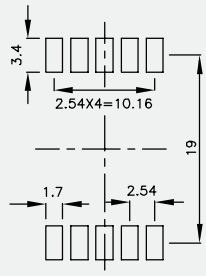

Tolerance: ± 0.15

KM-23-F,KM-23xxx

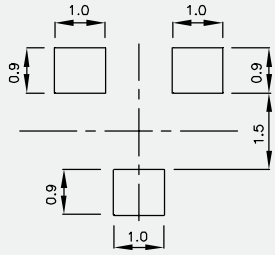

KM2520xxx03

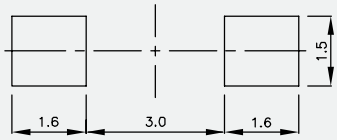

KM2520xxx08

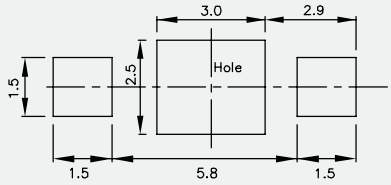

KM2520xxx09

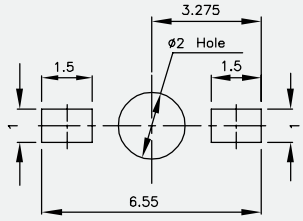

KP-1608,KPC-1608,KPG-1608, KPH-1608,KPHM-1608,KPT-1608,KPTD-1608

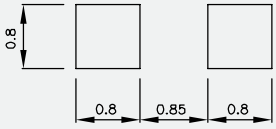

KP-2012,KPT-2012

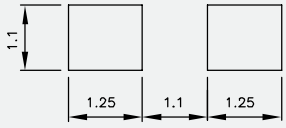

KP-3216,KPT-3216,KPTD-3216

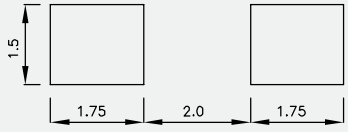

KPA-1606

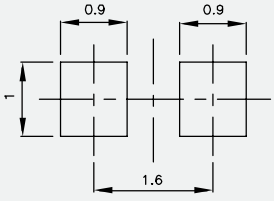

KPA-2107

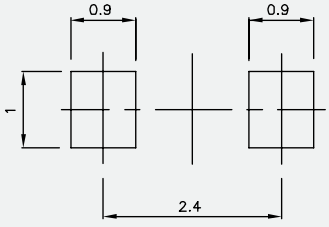

KPA-3010,KPBA-3010

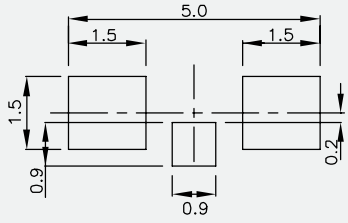

KPA-3210

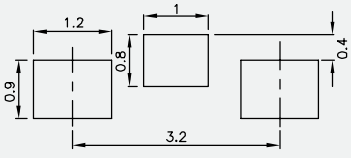

KPB-3025,KPBL-3025

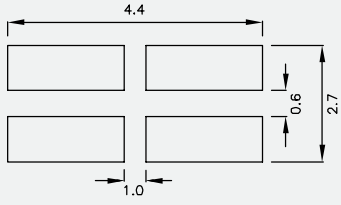

KPBD-3224

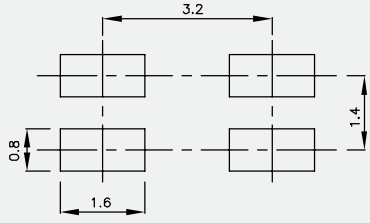

NOTES:
1. All dimensions are in millimeters.
2. Tolerance is ±0.1mm unless otherwise noted.

RECOMMENDED SOLDERING PATTERN

KPBDA-3020-PF

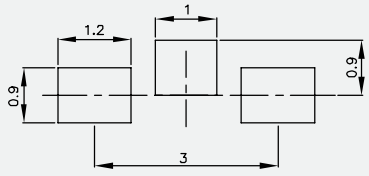

KPD-3224

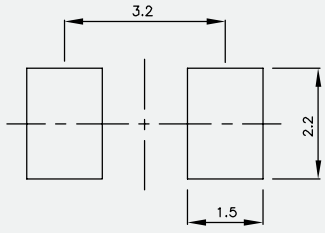

KPED-3528

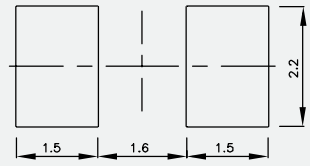

KPFA-2507

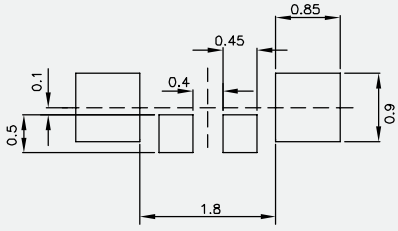

KPFA-3010

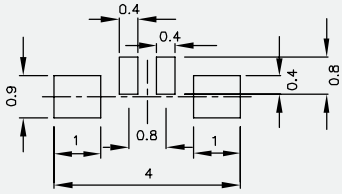

KPFA-3011

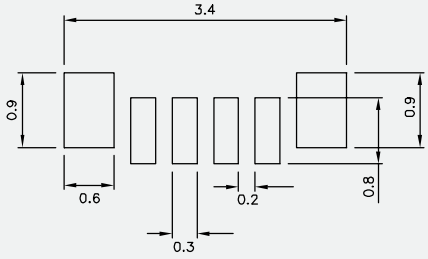

KPG-0603

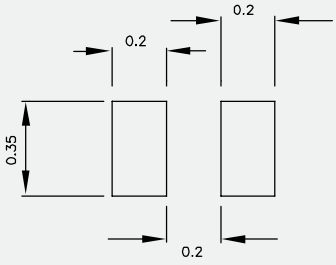

KPG-1005,KPHHS-1005

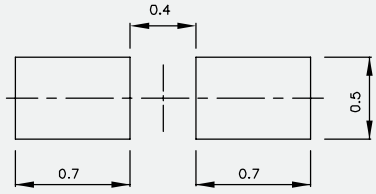

KPG1-1608

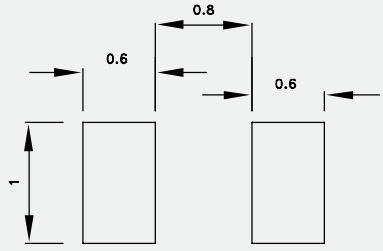

KPGA-1602

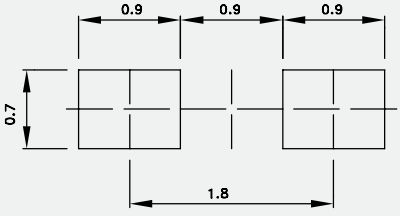

KPGF-0606

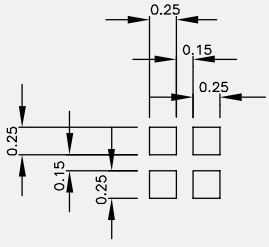

KPGF-1011

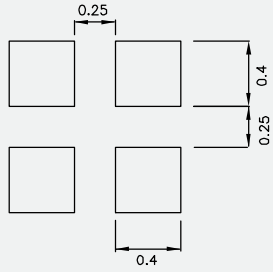

KPHB-1608

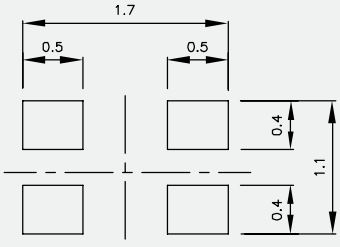

KPHBM-2012

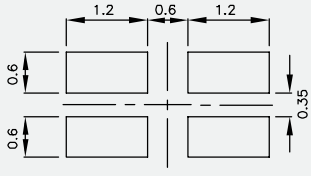

KPHCM-2012

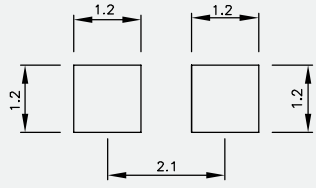

NOTES:
1. All dimensions are in millimeters.
2. Tolerance is ±0.1mm unless otherwise noted.

RECOMMENDED SOLDERING PATTERN

KPHD-1608

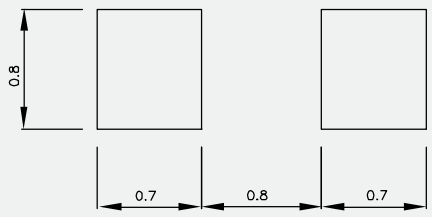

KPL-3015

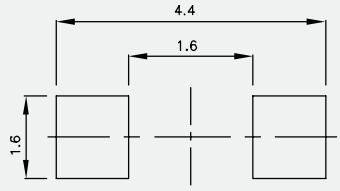

KPPA-3010

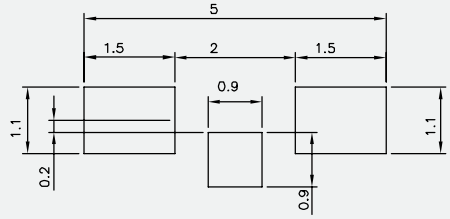

KPS-3227SP1C

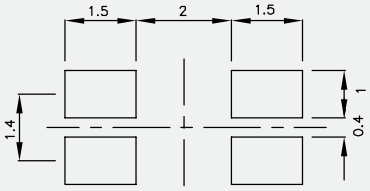

KPS-5130PD7C

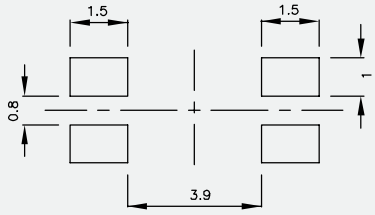

KPTB-1612

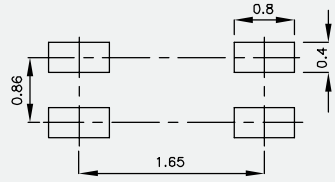

KPTB-1615

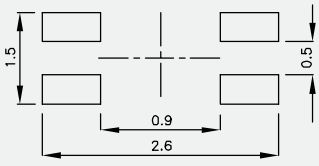

KPTBD-3216

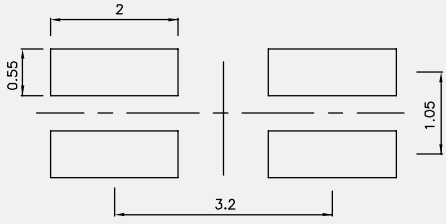

KPTC-3212-01

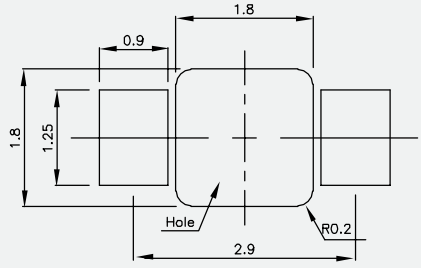

KPTF-1616

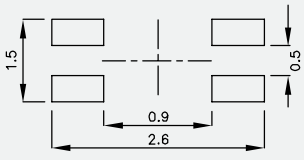

KPTL-3216

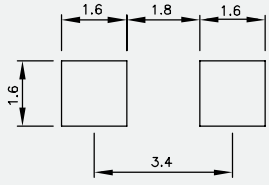

KPTR-3216

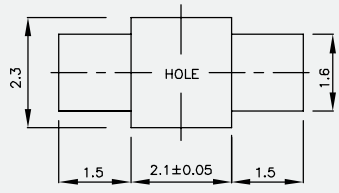

KTDS-3536

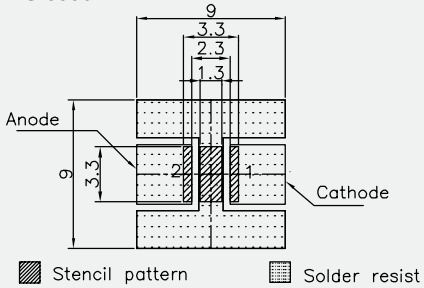

NOTES:
1. All dimensions are in millimeters.
2. Tolerance is ±0.1mm unless otherwise noted.

TECHNICAL DATA

Absolute maximum ratings (T_A=25°C)		E, I Hi.Eff.Red Orange (GaAsP/GaP)	H Bright Red (GaP)	SR Super Bright Red (GaAlAs)	SR-J4 Super Bright Red (AlGaInP)	SURK Hyper Red (AlGaInP)	SURK-T Hyper Red (AlGaInP)	SUR-E Hyper Red (AlGaInP)	Unit
		●	●	●	●	●	●	●	
Reverse voltage	V_R	5	5	5	5	5	5	5	V
Forward current	I_F	30	25	30	30	30	30	30	mA
Forward current (Peak) 1/10 Duty Cycle, 0.1ms Pulse Width	i_{FS}	160	130	155	150	185	150	200	mA
Power dissipation	P_D	75	62.5	75	75	75	75	75	mW
LED LAMPS:									
Operating temperature	T_A	- 40~+85	- 40~+85	- 40~+85	- 40~+85	- 40~+85	- 40~+85	- 40~+85	°C
Storage temperature	T_{STG}	- 40~+85	- 40~+85	- 40~+85	- 40~+85	- 40~+85	- 40~+85	- 40~+85	°C
LED DISPLAYS:									
Operating temperature	T_A	- 40~+85	- 40~+85	- 40~+85	- 40~+85	- 40~+85	- 40~+85	- 40~+85	°C
Storage temperature	T_{STG}	- 40~+85	- 40~+85	- 40~+85	- 40~+85	- 40~+85	- 40~+85	- 40~+85	°C

Operating Characteristics		E, I Hi.Eff.Red Orange (GaAsP/GaP)	H Bright Red (GaP)	SR Super Bright Red (GaAlAs)	SR-J4 Super Bright Red (AlGaInP)	SURK Hyper Red (AlGaInP)	SURK-T Hyper Red (AlGaInP)	SUR-E Hyper Red (AlGaInP)	Unit
		●	●	●	●	●	●	●	
Forward voltage (typ.)									
I_F=20mA		2.0	2.25	1.85	2.1	1.95	2.0	1.9	
I_F=10mA	V_F	1.9	2.05	1.8	1.8	1.85	1.85	1.8	V
I_F=2mA		1.7	1.85	1.65	1.65	1.75	1.75	1.7	
Forward voltage (max.) I_F=20mA, 10mA, 2mA	V_F	2.5	2.5	2.5	2.5	2.5	2.5	2.5	V
Reverse current V_R=5V	I_R	10	10	10	10	10	10	10	uA
Peak Emission Wavelength I_F=20mA, 10mA, 2mA	λp	627	700	655	660	645	645	645	nm
Dominant Wavelength I_F=20mA, 10mA, 2mA	λD	617	635	640	640	630	630	630	nm
Spectral line half-width I_F=20mA, 10mA, 2mA	$\Delta\lambda 1/2$	45	45	20	20	28	20	25	nm
Capacitance V_F=0V,f=1MHZ	C	15	40	45	45	35	35	45	pF

TECHNICAL DATA

Absolute maximum ratings (T_A=25°C)		SUR-G Hyper Red (AlGaInP)	SE-J3-K Hyper Red (AlGaInP)	SE-J3 Hyper Red (AlGaInP)	SE-E Hyper Red (AlGaInP)	SE-H Hyper Red (AlGaInP)	SE-J4-K Super Bright Orange (AlGaInP)	SE-J4 Super Bright Orange (AlGaInP)	N Pure Orange (GaAsP/GaP)	Unit
		●	●	●	●	●	●	●	●	
Reverse voltage	V_R	5	5	5	5	5	5	5	5	V
Forward current	I_F	30	30	30	30	30	30	30	25	mA
Forward current (Peak) 1/10 Duty Cycle, 0.1ms Pulse Width	i_{FS}	150	150	150	195	150	150	150	145	mA
Power dissipation	P_D	75	84	84	75	84	84	84	62.5	mW
LED LAMPS:										
Operating temperature	T_A	- 40~+85	- 40~+85	- 40~+85	- 40~+85	- 40~+85	- 40~+85	- 40~+85	- 40~+85	°C
Storage temperature	T_{STG}	- 40~+85	- 40~+85	- 40~+85	- 40~+85	- 40~+85	- 40~+85	- 40~+85	- 40~+85	°C
LED DISPLAYS:										
Operating temperature	T_A	- 40~+85	- 40~+85	- 40~+85	- 40~+85	- 40~+85	- 40~+85	- 40~+85	- 40~+85	°C
Storage temperature	T_{STG}	- 40~+85	- 40~+85	- 40~+85	- 40~+85	- 40~+85	- 40~+85	- 40~+85	- 40~+85	°C

Operating Characteristics		SUR-G Hyper Red (AlGaInP)	SE-J3-K Hyper Red (AlGaInP)	SE-J3 Hyper Red (AlGaInP)	SE-E Hyper Red (AlGaInP)	SE-H Hyper Red (AlGaInP)	SE-J4-K Super Bright Orange (AlGaInP)	SE-J4 Super Bright Orange (AlGaInP)	N Pure Orange (GaAsP/GaP)	Unit
		●	●	●	●	●	●	●	●	
Forward voltage (typ.)										
I_F=20mA		1.9	2.2	2.2	2.0	2.2	2.2	2.2	2.05	
I_F=10mA	V_F	1.85	2.0	2.0	1.9	2.05	2.0	2.0	1.95	V
I_F=2mA		1.75	1.8	1.8	1.8	1.85	1.8	1.8	1.85	
Forward voltage (max.) I_F=20mA, 10mA, 2mA	V_F	2.5	2.8	2.8	2.5	2.8	2.8	2.8	2.5	V
Reverse current V_R=5V	I_R	10	10	10	10	10	10	10	10	uA
Peak Emission Wavelength I_F=20mA, 10mA, 2mA	λp	645	640	640	630	635	611	611	607	nm
Dominant Wavelength I_F=20mA, 10mA, 2mA	λD	630	625	625	621	625	605	605	602	nm
Spectral line half-width I_F=20mA, 10mA, 2mA	$\Delta\lambda 1/2$	22	20	25	20	25	17	17	35	nm
Capacitance V_F=0V,f=1MHZ	C	45	27	27	25	27	27	27	15	pF

TECHNICAL DATA

Absolute maximum ratings (T_A=25°C)		SEK Super Bright Orange (AlGaInP)	SEK-T Super Bright Orange (AlGaInP)	G,SG Green, Super Bright Green (GaP)	CGK Green (AlGaInP)	CGK-T Green (AlGaInP)	ZG-K Green (InGaN)	ZG Green (InGaN)	Unit
		●	●	●	●	●	●	●	
Reverse voltage	V_R	5	5	5	5	5	5	5	V
Forward current	I_F	30	30	25	30	30	25	25	mA
Forward current (Peak) 1/10 Duty Cycle, 0.1ms Pulse Width	i_{FS}	195	150	140	150	150	150	150	mA
Power dissipation	P_D	75	75	62.5	75	78	102.5	102.5	mW
LED LAMPS:									
Operating temperature	T_A	- 40~+85	- 40~+85	- 40~+85	- 40~+85	- 40~+85	- 40~+85	- 40~+85	°C
Storage temperature	T_{STG}	- 40~+85	- 40~+85	- 40~+85	- 40~+85	- 40~+85	- 40~+85	- 40~+85	°C
LED DISPLAYS:									
Operating temperature	T_A	- 40~+85	- 40~+85	- 40~+85	- 40~+85	- 40~+85	- 40~+85	- 40~+85	°C
Storage temperature	T_{STG}	- 40~+85	- 40~+85	- 40~+85	- 40~+85	- 40~+85	- 40~+85	- 40~+85	°C

Operating Characteristics		SEK Super Bright Orange (AlGaInP)	SEK-T Super Bright Orange (AlGaInP)	G,SG Green, Super Bright Green (GaP)	CGK Green (AlGaInP)	CGK-T Green (AlGaInP)	ZG-K Green (InGaN)	ZG Green (InGaN)	Unit
		●	●	●	●	●	●	●	
Forward voltage (typ.)									
I_F=20mA		2.1	2.05	2.2	2.1	2.1	3.3	3.3	
I_F=10mA	V_F	2.0	1.95	2.0	2.0	1.95	3.0	3.0	V
I_F=2mA		1.85	1.8	1.9	1.9	1.8	2.65	2.65	
Forward voltage (max.) I_F=20mA, 10mA, 2mA	V_F	2.5	2.5	2.5	2.5	2.6	4.1	4.1	V
Reverse current V_R=5V	I_R	10	10	10	10	10	50	50	uA
Peak Emission Wavelength I_F=20mA, 10mA, 2mA	λp	610	610	565	574	574	515	515	nm
Dominant Wavelength I_F=20mA, 10mA, 2mA	λD	601	601	568	570	570	525	525	nm
Spectral line half-width I_F=20mA, 10mA, 2mA	$\Delta\lambda 1/2$	29	17	30	20	15	35	30	nm
Capacitance V_F=0V,f=1MHZ	C	15	15	15	15	15	45	45	pF

TECHNICAL DATA

Absolute maximum ratings (T_A=25°C)		ZG-E Green (InGaN)	ZG-G Green (InGaN)	Y Yellow (GaAsP/GaP)	SYK Super Bright Yellow (AlGaInP)	SYK-T Super Bright Yellow (AlGaInP)	SY Super Bright Yellow (AlGaInP)	SY-H Super Bright Yellow (AlGaInP)	Unit
		●	●	●	●	●	●	●	
Reverse voltage	V_R	5	5	5	5	5	5	5	V
Forward current	I_F	30	30	30	30	30	30	30	mA
Forward current (Peak) 1/10 Duty Cycle, 0.1ms Pulse Width	i_{FS}	100	100	140	175	150	150	140	mA
Power dissipation	P_D	120	120	75	75	75	75	84	mW
LED LAMPS:									
Operating temperature	T_A	- 40~+85	- 40~+85	- 40~+85	- 40~+85	- 40~+85	- 40~+85	- 40~+85	°C
Storage temperature	T_{STG}	- 40~+85	- 40~+85	- 40~+85	- 40~+85	- 40~+85	- 40~+85	- 40~+85	°C
LED DISPLAYS:									
Operating temperature	T_A	- 40~+85	- 40~+85	- 40~+85	- 40~+85	- 40~+85	- 40~+85	- 40~+85	°C
Storage temperature	T_{STG}	- 40~+85	- 40~+85	- 40~+85	- 40~+85	- 40~+85	- 40~+85	- 40~+85	°C

Operating Characteristics		ZG-E Green (InGaN)	ZG-G Green (InGaN)	Y Yellow (GaAsP/GaP)	SYK Super Bright Yellow (AlGaInP)	SYK-T Super Bright Yellow (AlGaInP)	SY Super Bright Yellow (AlGaInP)	SY-H Super Bright Yellow (AlGaInP)	Unit
		●	●	●	●	●	●	●	
Forward voltage (typ.)									
I_F=20mA		3.2	3.2	2.1	2.0	2.05	2.0	2.3	
I_F=10mA	V_F	3.05	3.05	1.95	1.95	1.95	1.95	2.2	V
I_F=2mA		2.8	2.8	1.85	1.85	1.8	1.8	2	
Forward voltage (max.) I_F=20mA, 10mA, 2mA	V_F	4.0	4.0	2.5	2.5	2.5	2.5	2.8	V
Reverse current V_R=5V	I_R	50	50	10	10	10	10	10	uA
Peak Emission Wavelength I_F=20mA, 10mA, 2mA	λp	520	520	590	590	590	590	590	nm
Dominant Wavelength I_F=20mA, 10mA, 2mA	λD	525	525	588	590	590	590	589	nm
Spectral line half-width I_F=20mA, 10mA, 2mA	$\Delta\lambda 1/2$	35	35	35	20	15	28	20	nm
Capacitance V_F=0V,f=1MHZ	C	100	100	20	20	25	25	45	pF

TECHNICAL DATA

Absolute maximum ratings (T_A=25°C)		SY-J3-K Super Bright Yellow (AlGaInP)	SY-J3 Super Bright Yellow (AlGaInP)	MB Blue (GaN)	PB-A Blue (InGaN)	QB-D Blue (InGaN)	QB-F Blue (InGaN)	QB-G Blue (InGaN)	VB-D Blue (InGaN)	Unit
		●	●	●	●	●	●	●	●	
Reverse voltage	V_R	5	5	5	5	5	5	5	5	V
Forward current	I_F	30	30	30	30	30	30	30	30	mA
Forward current (Peak) 1/10 Duty Cycle, 0.1ms Pulse Width	i_{FS}	140	140	150	100	150	150	150	100	mA
Power dissipation	P_D	75	75	135	120	120	120	120	120	mW
LED LAMPS:										
Operating temperature	T_A	- 40~+85	- 40~+85	- 40~+85	- 40~+85	- 40~+85	- 40~+85	- 40~+85	- 40~+85	°C
Storage temperature	T_{STG}	- 40~+85	- 40~+85	- 40~+85	- 40~+85	- 40~+85	- 40~+85	- 40~+85	- 40~+85	°C
LED DISPLAYS:										
Operating temperature	T_A	- 40~+85	- 40~+85	- 40~+85	- 40~+85	- 40~+85	- 40~+85	- 40~+85	- 40~+85	°C
Storage temperature	T_{STG}	- 40~+85	- 40~+85	- 40~+85	- 40~+85	- 40~+85	- 40~+85	- 40~+85	- 40~+85	°C

Operating Characteristics		SY-J3-K Super Bright Yellow (AlGaInP)	SY-J3 Super Bright Yellow (AlGaInP)	MB Blue (GaN)	PB-A Blue (InGaN)	QB-D Blue (InGaN)	QB-F Blue (InGaN)	QB-G Blue (InGaN)	VB-D Blue (InGaN)	Unit
		●	●	●	●	●	●	●	●	
Forward voltage (typ.)										
I_F=20mA		2.0	2.0	3.8	3.2	3.3	3.3	3.3	3.3	
I_F=10mA	V_F	1.95	1.95	3.6	3.05	3.0	3.0	3.0	3.0	V
I_F=2mA		1.85	1.85	3.4	2.8	2.65	2.65	2.65	2.65	
Forward voltage (max.) I_F=20mA, 10mA, 2mA	V_F	2.5	2.5	4.5	4.0	4.0	4.0	4.0	4.0	V
Reverse current V_R=5V	I_R	10	10	10	10	50	50	50	50	uA
Peak Emission Wavelength I_F=20mA, 10mA, 2mA	λp	590	590	430	468	460	460	461	465	nm
Dominant Wavelength I_F=20mA, 10mA, 2mA	λD	590	590	466	465	465	465	465	470	nm
Spectral line half-width I_F=20mA, 10mA, 2mA	$\Delta\lambda 1/2$	20	20	60	21	25	25	25	22	nm
Capacitance V_F=0V,f=1MHZ	C	45	45	100	100	100	100	100	100	pF

TECHNICAL DATA 5V/14V WITH INTERNAL RESISTANCE

Absolute maximum ratings (T_A=25°C)		I Hi.Eff.Red (GaAsP/GaP)	SR Super Bright Red (GaAlAs)	G Green (GaP)	Y Yellow (GaAsP/GaP)	Unit
		●	●	●	●	
Reverse voltage	V_R	5	5	5	5	V
Forward voltage (Max.) for 5V	V_F	6	6	6	6	V
Forward voltage (Max.) for 14V	V_F	16	16	16	16	V
Power dissipation for 5V	P_D	85	85	85	85	mW
Power dissipation for 14V	P_D	160	160	160	160	mW
LED LAMPS:						
Operating temperature	T_A	- 40~+70	- 40~+70	- 40~+70	- 40~+70	°C
Storage temperature	T_{STG}	- 40~+85	- 40~+85	- 40~+85	- 40~+85	°C
LED DISPLAYS:						
Operating temperature	T_A	- 40~+70	- 40~+70	- 40~+70	- 40~+70	°C
Storage temperature	T_{STG}	- 40~+85	- 40~+85	- 40~+85	- 40~+85	°C

Operating Characteristics		I Hi.Eff.Red (GaAsP/GaP)	SR Super Bright Red (GaAlAs)	G Green (GaP)	Y Yellow (GaAsP/GaP)	Unit
		●	●	●	●	
Forward current (typ.) V_F=5V	I_F	13	13	11.5	13	mA
Forward current (typ.) V_F=14V	I_F	10.5	10.5	10.5	10.5	mA
Forward current (max.) V_F=5V	I_F	17.5	17.5	17.5	17.5	mA
Forward current (max.) V_F=14V	I_F	13.5	13.5	13.5	13.5	mA
Reverse current V_R=5V	I_R	10	10	10	10	uA
Peak Emission Wavelength V_F=5V,14V	λp	627	655	565	590	nm
Dominant Wavelength V_F=5V,14V	λD	617	640	568	588	nm
Spectral line half-width V_F=5V,14V	$\Delta\lambda 1/2$	45	20	30	35	nm

TECHNICAL DATA FOR BLINKING LED LAMPS

Absolute maximum ratings (T_A=25°C)		I Hi.Eff.Red (GaAsP/GaP)	H Bright Red (GaP)	SR Super Bright Red (GaAlAs)	Unit
		●	●	●	
Reverse voltage	V_R	0.5	0.5	0.5	V
Forward voltage (max.)	V_F	14	14	14	V
Total Power dissipation	P_D	310	310	310	mW
Operating temperature	T_A	- 40~+70	- 40~+70	- 40~+70	°C
Storage temperature	T_{STG}	- 40~+85	- 40~+85	- 40~+85	°C

Operating Characteristics		I Hi.Eff.Red (GaAsP/GaP)	H Bright Red (GaP)	SR Super Bright Red (GaAlAs)	Unit
		●	●	●	
Forward current (min.) V_F=3.5V	I_F	8	8	8	mA
Forward current (typ.) V_F=5V	I_F	22	22	22	mA
Supply current V_F=3.5V ~ 14V	I_{SON}	8 ~ 44	8 ~ 44	8 ~ 44	mA
Blink frequency V_F=3.5V ~ 14V	f	3 ~ 1.5	3 ~ 1.5	3 ~ 1.5	Hz
Peak Emission Wavelength	λp	627	700	655	nm
Dominant Wavelength	λD	617	635	640	nm
Spectral line half-width	$\Delta\lambda 1/2$	45	45	20	nm

TECHNICAL DATA FOR INFRARED

Absolute maximum ratings (T_A=25°C)		F3 (GaAs)	SF4 (GaAlAs)	SF6 (GaAlAs)	SF7 (GaAlAs)	Unit
		●	●	●	●	
Reverse voltage	V_R	5	5	5	5	V
Forward current	I_F	50	50	50	50	mA
Forward current (Peak) 1/100 Duty Cycle, 10μs Pulse Width	i_{FS}	1.2	1.2	1	1	A
Power dissipation	P_D	80	80	80	80	mW
LED LAMPS:						
Operating temperature	T_A	- 40~+85	- 40~+85	- 40~+85	- 40~+85	°C
Storage temperature	T_{STG}	- 40~+85	- 40~+85	- 40~+85	- 40~+85	°C
LED DISPLAYS:						
Operating temperature	T_A	- 40~+85	- 40~+85	- 40~+85	- 40~+85	°C
Storage temperature	T_{STG}	- 40~+85	- 40~+85	- 40~+85	- 40~+85	°C

Operating Characteristics		F3 (GaAs)	SF4 (GaAlAs)	SF6 (GaAlAs)	SF7 (GaAlAs)	Unit
		●	●	●	●	
Forward voltage (typ.) I_F=20mA	V_F	1.2	1.3	1.35	1.4	V
Forward voltage (max.) I_F=20mA	V_F	1.6	1.6	1.6	1.6	V
Reverse current V_R=5V	I_R	10	10	10	10	uA
Peak Emission Wavelength I_F=20mA	λp	940	880	860	850	nm
Spectral line half-width I_F=20mA	$\Delta\lambda 1/2$	50	50	50	50	nm
Capacitance VF=0V,f=1MHZ	C	90	90	30	30	pF

TECHNICAL DATA

High Efficiency Red,Orange | E, I : GaAsP/GaP

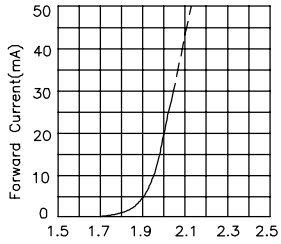

FORWARD CURRENT Vs.
FORWARD VOLTAGE

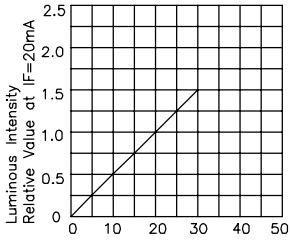

LUMINOUS INTENSITY Vs.
FORWARD CURRENT

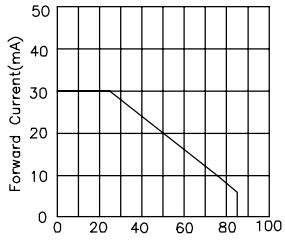

FORWARD CURRENT
DERATING CURVE

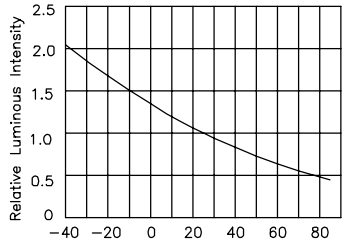

LUMINOUS INTENSITY Vs.
AMBIENT TEMPERATURE

Bright Red | H : GaP

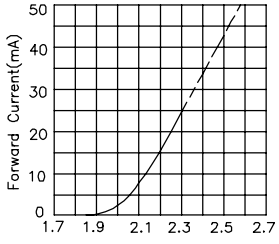

FORWARD CURRENT Vs.
FORWARD VOLTAGE

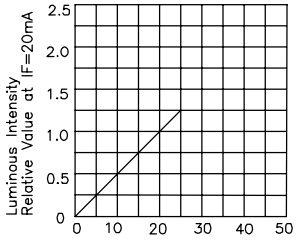

LUMINOUS INTENSITY Vs.
FORWARD CURRENT

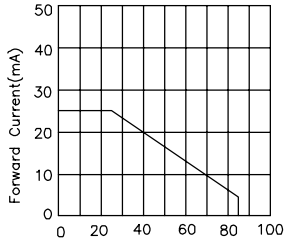

FORWARD CURRENT
DERATING CURVE

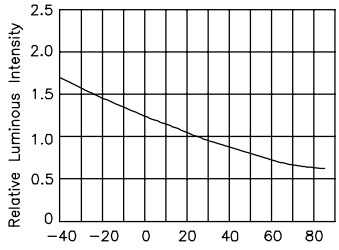

LUMINOUS INTENSITY Vs.
AMBIENT TEMPERATURE

Super Bright Red | SR : GaAlAs

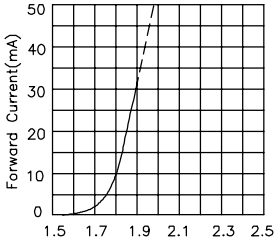

FORWARD CURRENT Vs.
FORWARD VOLTAGE

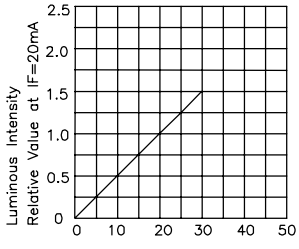

LUMINOUS INTENSITY Vs.
FORWARD CURRENT

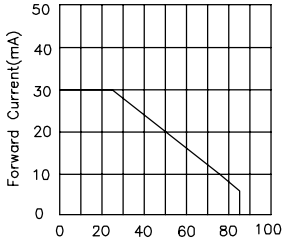

FORWARD CURRENT
DERATING CURVE

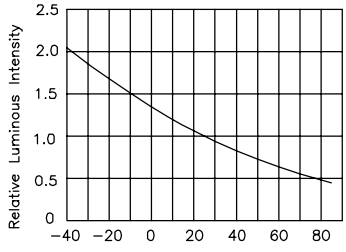

LUMINOUS INTENSITY Vs.
AMBIENT TEMPERATURE

Super Bright Red | SR-J4 : AlGaInP

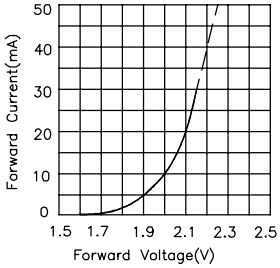

FORWARD CURRENT Vs.
FORWARD VOLTAGE

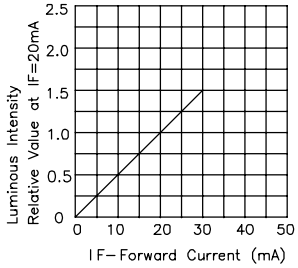

LUMINOUS INTENSITY Vs.
FORWARD CURRENT

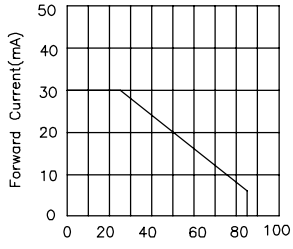

FORWARD CURRENT
DERATING CURVE

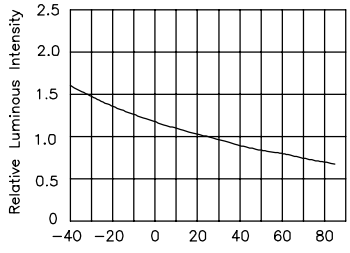

LUMINOUS INTENSITY Vs.
AMBIENT TEMPERATURE

TECHNICAL DATA

Hyper Red — SURK : AlGaInP

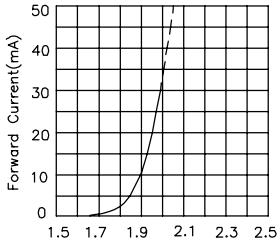

Forward Voltage(V)
FORWARD CURRENT Vs.
FORWARD VOLTAGE

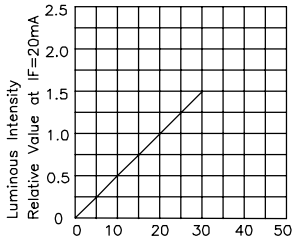

IF–Forward Current (mA)
LUMINOUS INTENSITY Vs.
FORWARD CURRENT

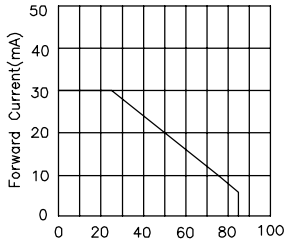

Ambient Temperature TA (˚C)
FORWARD CURRENT
DERATING CURVE

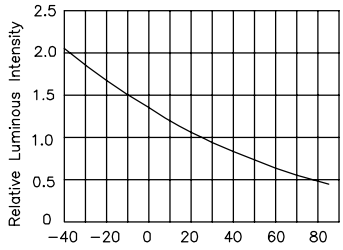

Ambient Temperature TA (˚C)
LUMINOUS INTENSITY Vs.
AMBIENT TEMPERATURE

Hyper Red — SURK-T : AlGaInP

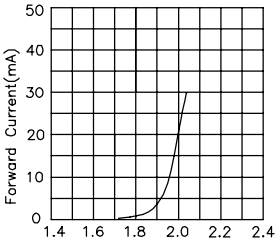

Forward Voltage(V)
FORWARD CURRENT Vs.
FORWARD VOLTAGE

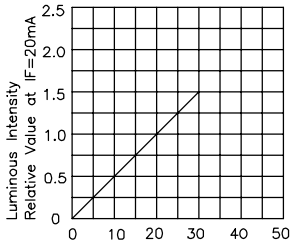

IF– Forward Current (mA)
LUMINOUS INTENSITY Vs.
FORWARD CURRENT

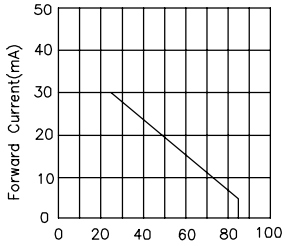

Ambient Temperature TA (˚C)
FORWARD CURRENT
DERATING CURVE

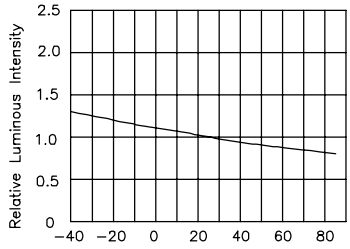

Ambient Temperature TA (˚C)
LUMINOUS INTENSITY Vs.
AMBIENT TEMPERATURE

Hyper Red — SUR-E : AlGaInP

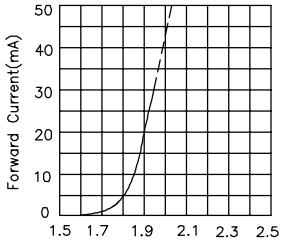

Forward Voltage(V)
FORWARD CURRENT Vs.
FORWARD VOLTAGE

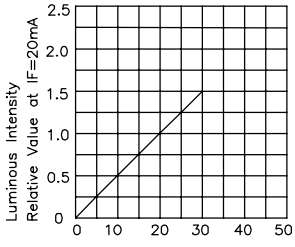

IF–Forward Current (mA)
LUMINOUS INTENSITY Vs.
FORWARD CURRENT

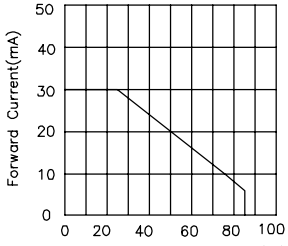

Ambient Temperature TA (˚C)
FORWARD CURRENT
DERATING CURVE

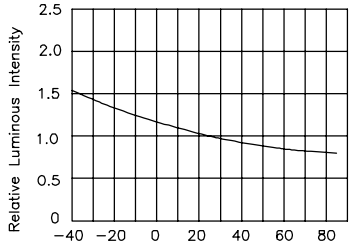

Ambient Temperature TA (˚C)
LUMINOUS INTENSITY Vs.
AMBIENT TEMPERATURE

Hyper Red — SUR-G : AlGaInP

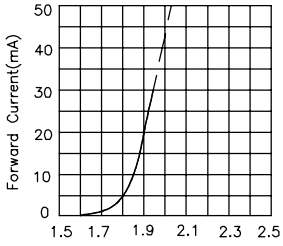

Forward Voltage(V)
FORWARD CURRENT Vs.
FORWARD VOLTAGE

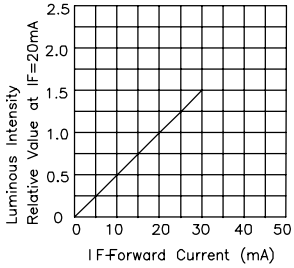

IF-Forward Current (mA)
LUMINOUS INTENSITY Vs.
FORWARD CURRENT

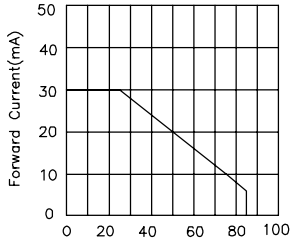

Ambient Temperature TA (˚C)
FORWARD CURRENT
DERATING CURVE

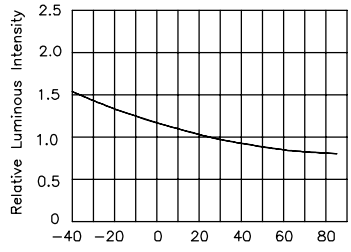

Ambient Temperature TA (˚C)
LUMINOUS INTENSITY Vs.
AMBIENT TEMPERATURE

TECHNICAL DATA

Hyper Red — SE-J3-K, SE-J3 : AlGaInP

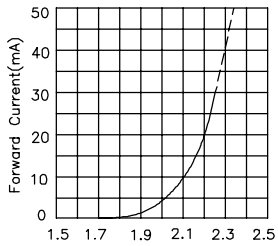

FORWARD CURRENT Vs. FORWARD VOLTAGE

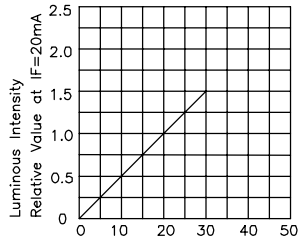

LUMINOUS INTENSITY Vs. FORWARD CURRENT

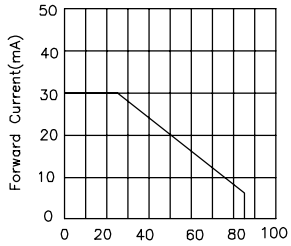

FORWARD CURRENT DERATING CURVE

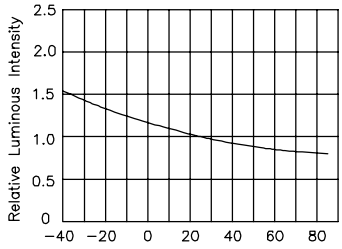

LUMINOUS INTENSITY Vs. AMBIENT TEMPERATURE

Hyper Red — SE-E : AlGaInP

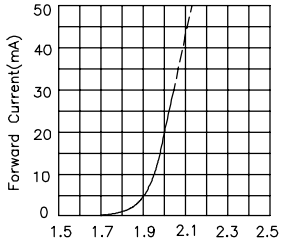

FORWARD CURRENT Vs. FORWARD VOLTAGE

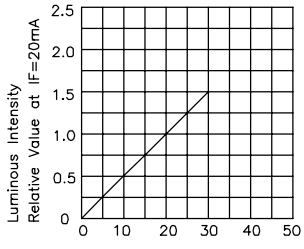

LUMINOUS INTENSITY Vs. FORWARD CURRENT

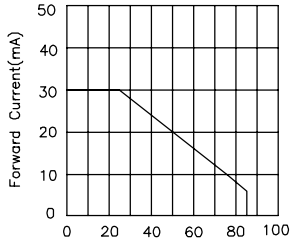

FORWARD CURRENT DERATING CURVE

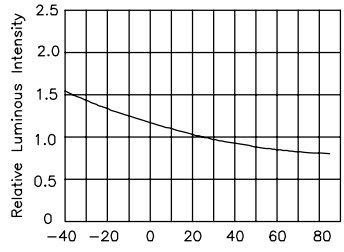

LUMINOUS INTENSITY Vs. AMBIENT TEMPERATURE

Hyper Red — SE-H : AlGaInP

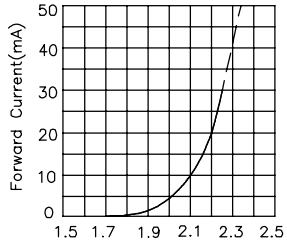

FORWARD CURRENT Vs. FORWARD VOLTAGE

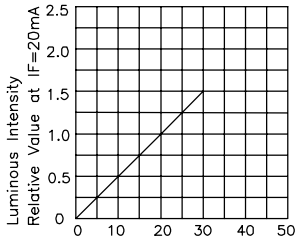

LUMINOUS INTENSITY Vs. FORWARD CURRENT

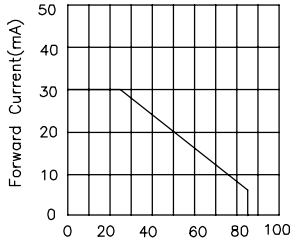

FORWARD CURRENT DERATING CURVE

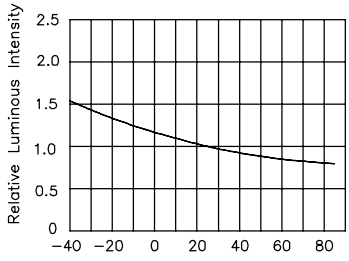

LUMINOUS INTENSITY Vs. AMBIENT TEMPERATURE

Super Bright Orange — SE-J4-K, SE-J4 : AlGaInP

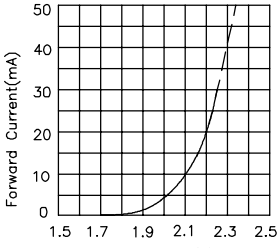

FORWARD CURRENT Vs. FORWARD VOLTAGE

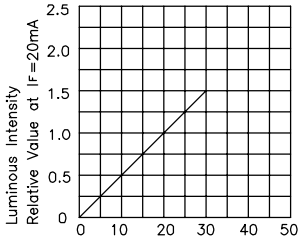

LUMINOUS INTENSITY Vs. FORWARD CURRENT

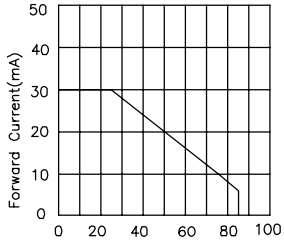

FORWARD CURRENT DERATING CURVE

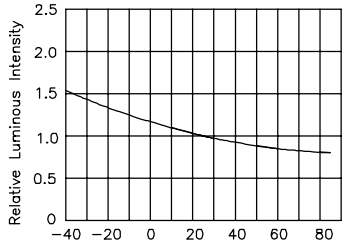

LUMINOUS INTENSITY Vs. AMBIENT TEMPERATURE

TECHNICAL DATA

Pure Orange — N : GaAsP/GaP

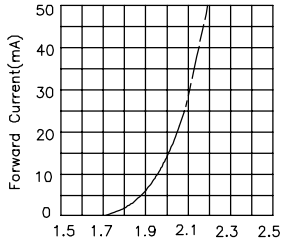

Forward Voltage(V)
FORWARD CURRENT Vs.
FORWARD VOLTAGE

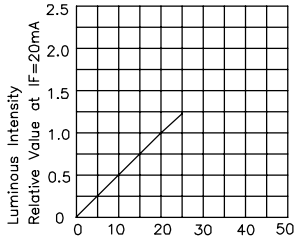

IF–Forward Current (mA)
LUMINOUS INTENSITY Vs.
FORWARD CURRENT

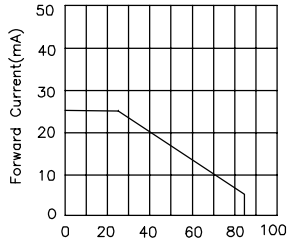

Ambient Temperature T_A (°C)
FORWARD CURRENT
DERATING CURVE

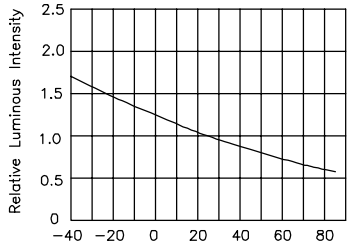

Ambient Temperature T_A (°C)
LUMINOUS INTENSITY Vs.
AMBIENT TEMPERATURE

Super Bright Orange — SEK : AlGaInP

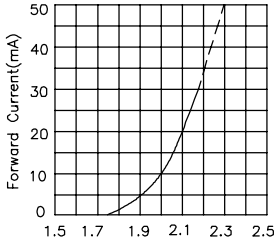

Forward Voltage(V)
FORWARD CURRENT Vs.
FORWARD VOLTAGE

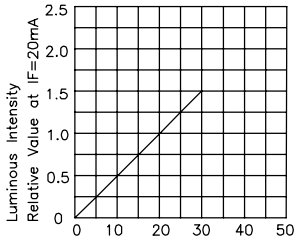

IF–Forward Current (mA)
LUMINOUS INTENSITY Vs.
FORWARD CURRENT

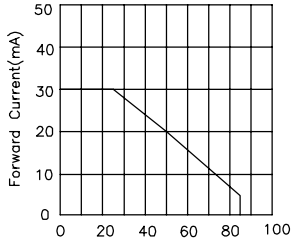

Ambient Temperature T_A (°C)
FORWARD CURRENT
DERATING CURVE

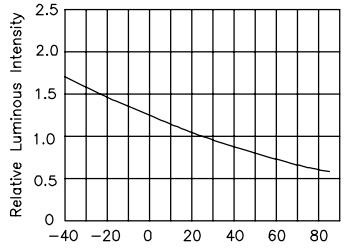

Ambient Temperature T_A (°C)
LUMINOUS INTENSITY Vs.
AMBIENT TEMPERATURE

Super Bright Orange — SEK-T : AlGaInP

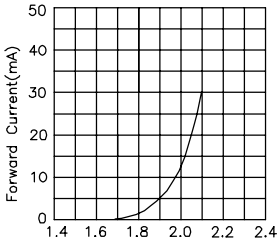

Forward Voltage(V)
FORWARD CURRENT Vs.
FORWARD VOLTAGE

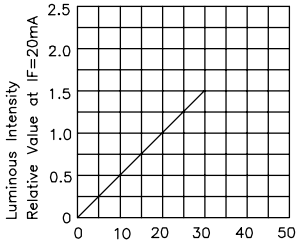

IF–Forward Current (mA)
LUMINOUS INTENSITY Vs.
FORWARD CURRENT

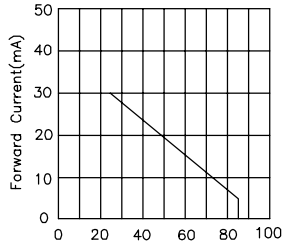

Ambient Temperature T_A (°C)
FORWARD CURRENT
DERATING CURVE

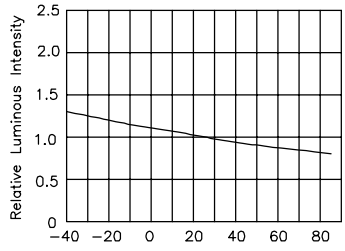

Ambient Temperature T_A (°C)
LUMINOUS INTENSITY Vs.
AMBIENT TEMPERATURE

Green/Super Bright Green — G, SG : GaP

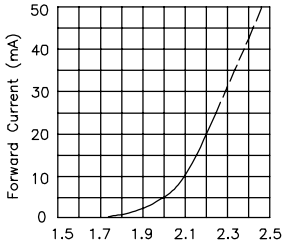

Forward Voltage(V)
FORWARD CURRENT Vs.
FORWARD VOLTAGE

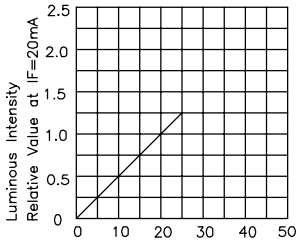

IF–Forward Current (mA)
LUMINOUS INTENSITY Vs.
FORWARD CURRENT

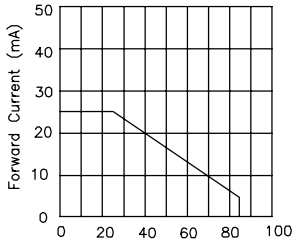

Ambient Temperature T_A (°C)
FORWARD CURRENT
DERATING CURVE

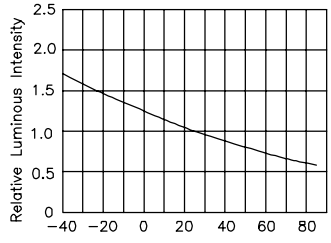

Ambient Temperature T_A (°C)
LUMINOUS INTENSITY Vs.
AMBIENT TEMPERATURE

TECHNICAL DATA

Green — CGK : AlGaInP

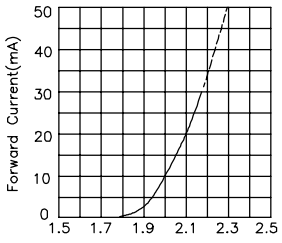

Forward Voltage(V)
FORWARD CURRENT Vs.
FORWARD VOLTAGE

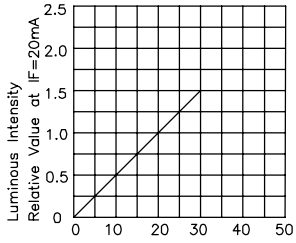

IF–Forward Current (mA)
LUMINOUS INTENSITY Vs.
FORWARD CURRENT

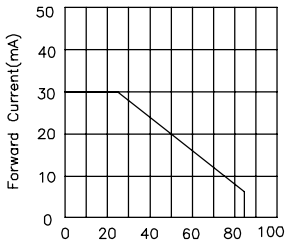

Ambient Temperature T_A (°C)
FORWARD CURRENT
DERATING CURVE

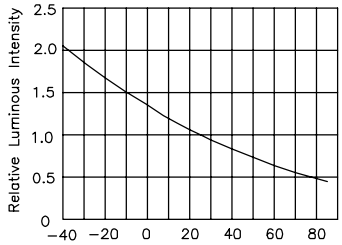

Ambient Temperature T_A (°C)
LUMINOUS INTENSITY Vs.
AMBIENT TEMPERATURE

Green — CGK-T : AlGaInP

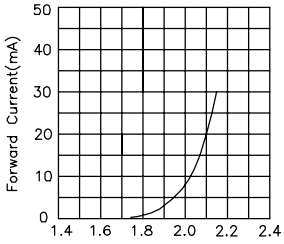

Forward Voltage(V)
FORWARD CURRENT Vs.
FORWARD VOLTAGE

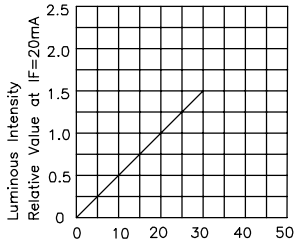

IF–Forward Current (mA)
LUMINOUS INTENSITY Vs.
FORWARD CURRENT

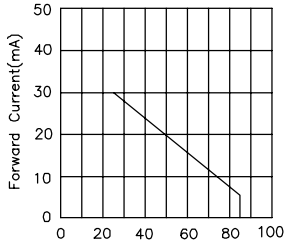

Ambient Temperature T_A (°C)
FORWARD CURRENT
DERATING CURVE

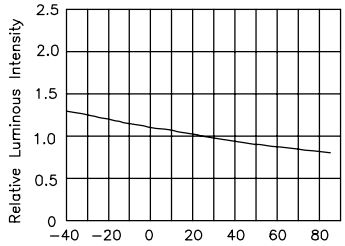

Ambient Temperature T_A (°C)
LUMINOUS INTENSITY Vs.
AMBIENT TEMPERATURE

Green — ZG-K : InGaN

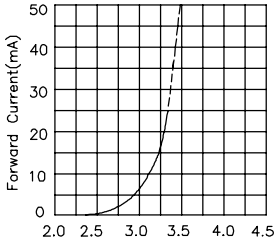

Forward Voltage(V)
FORWARD CURRENT Vs.
FORWARD VOLTAGE

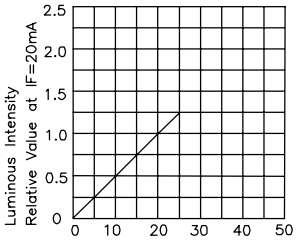

IF–Forward Current (mA)
LUMINOUS INTENSITY Vs.
FORWARD CURRENT

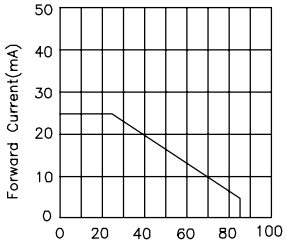

Ambient Temperature T_A (°C)
FORWARD CURRENT
DERATING CURVE

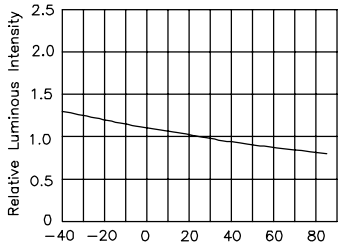

Ambient Temperature T_A (°C)
LUMINOUS INTENSITY Vs.
AMBIENT TEMPERATURE

Green — ZG : InGaN

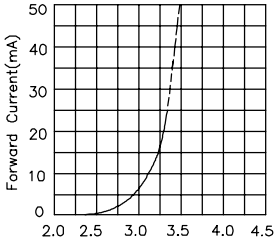

Forward Voltage(V)
FORWARD CURRENT Vs.
FORWARD VOLTAGE

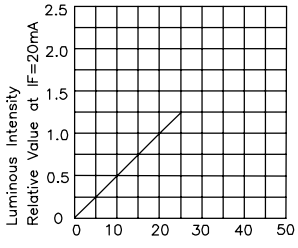

IF–Forward Current (mA)
LUMINOUS INTENSITY Vs.
FORWARD CURRENT

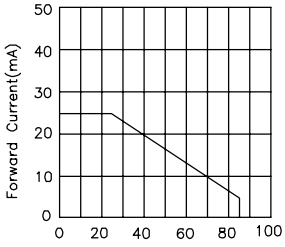

Ambient Temperature T_A (°C)
FORWARD CURRENT
DERATING CURVE

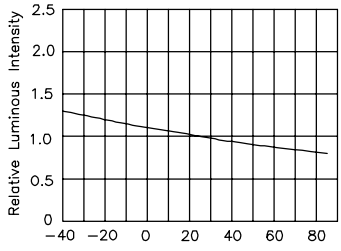

Ambient Temperature T_A (°C)
LUMINOUS INTENSITY Vs.
AMBIENT TEMPERATURE

TECHNICAL DATA

Green — ZG-E, ZG-G : InGaN

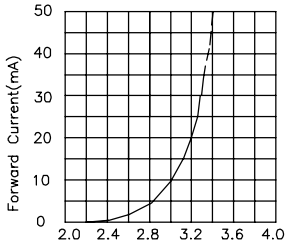

FORWARD CURRENT Vs. FORWARD VOLTAGE

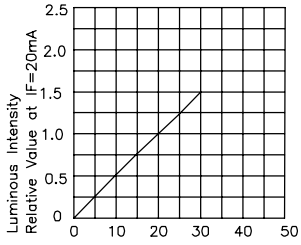

LUMINOUS INTENSITY Vs. FORWARD CURRENT

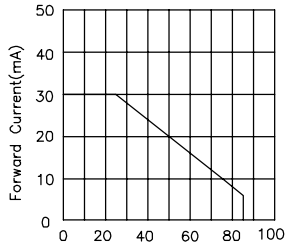

FORWARD CURRENT DERATING CURVE

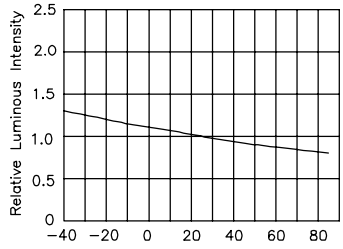

LUMINOUS INTENSITY Vs. AMBIENT TEMPERATURE

Yellow — Y : GaAsP/GaP

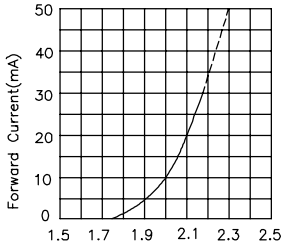

FORWARD CURRENT Vs. FORWARD VOLTAGE

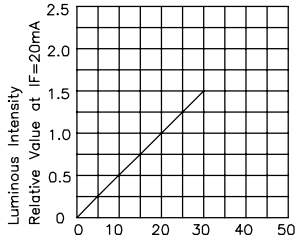

LUMINOUS INTENSITY Vs. FORWARD CURRENT

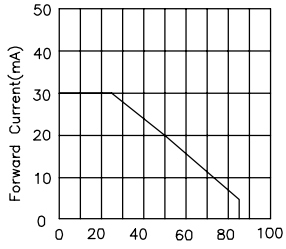

FORWARD CURRENT DERATING CURVE

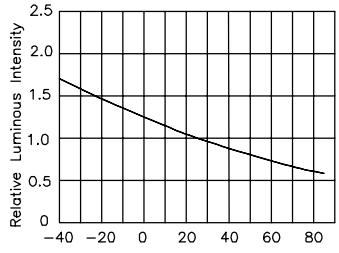

LUMINOUS INTENSITY Vs. AMBIENT TEMPERATURE

Super Bright Yellow — SYK, SY, SY-J3-K, SY-J3 : AlGaInP

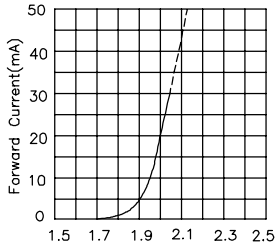

FORWARD CURRENT Vs. FORWARD VOLTAGE

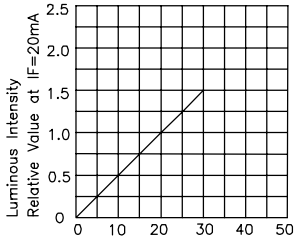

LUMINOUS INTENSITY Vs. FORWARD CURRENT

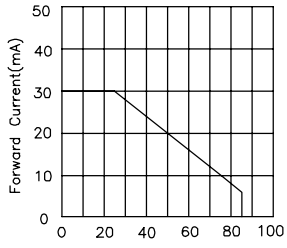

FORWARD CURRENT DERATING CURVE

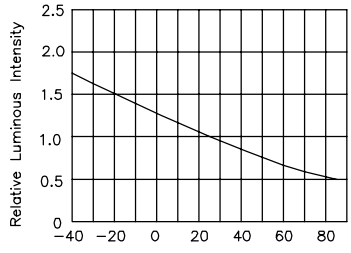

LUMINOUS INTENSITY Vs. AMBIENT TEMPERATURE

Super Bright Yellow — SYK-T : AlGaInP

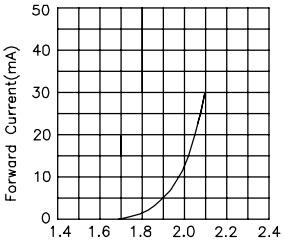

FORWARD CURRENT Vs. FORWARD VOLTAGE

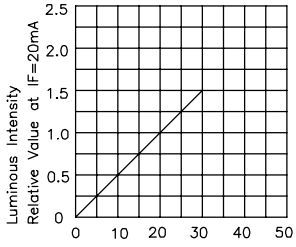

LUMINOUS INTENSITY Vs. FORWARD CURRENT

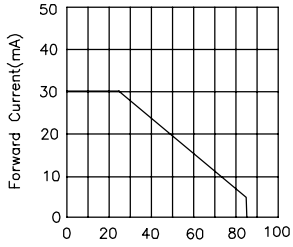

FORWARD CURRENT DERATING CURVE

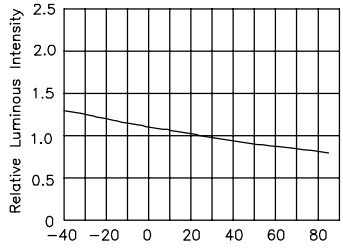

LUMINOUS INTENSITY Vs. AMBIENT TEMPERATURE

TECHNICAL DATA

Blue — MB : GaN

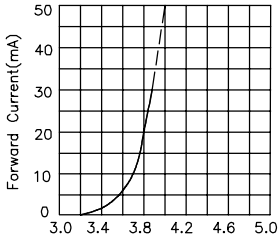

FORWARD CURRENT Vs.
FORWARD VOLTAGE

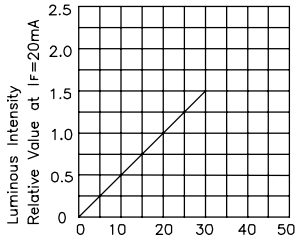

LUMINOUS INTENSITY Vs.
FORWARD CURRENT

FORWARD CURRENT
DERATING CURVE

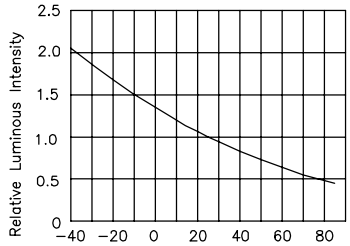

LUMINOUS INTENSITY Vs.
AMBIENT TEMPERATURE

Blue — PB-A : InGaN

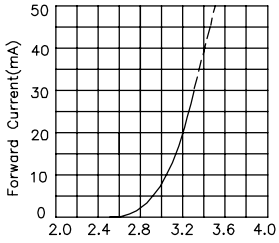

FORWARD CURRENT Vs.
FORWARD VOLTAGE

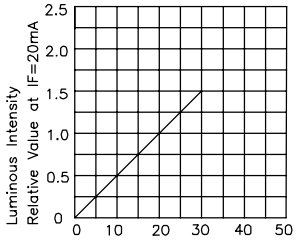

LUMINOUS INTENSITY Vs.
FORWARD CURRENT

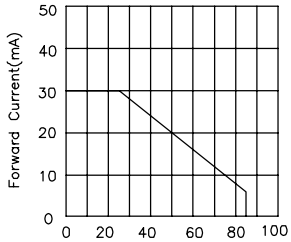

FORWARD CURRENT
DERATING CURVE

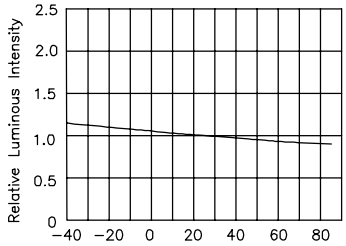

LUMINOUS INTENSITY Vs.
AMBIENT TEMPERATURE

Blue — QB-D, QB-F, QB-G : InGaN

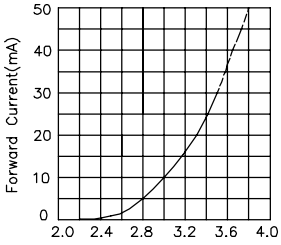

FORWARD CURRENT Vs.
FORWARD VOLTAGE

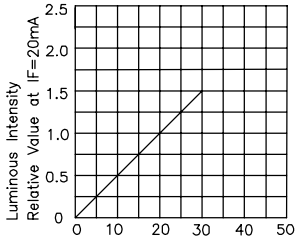

LUMINOUS INTENSITY Vs.
FORWARD CURRENT

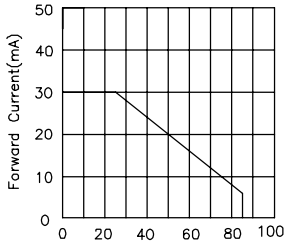

FORWARD CURRENT
DERATING CURVE

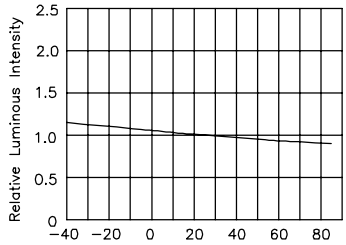

LUMINOUS INTENSITY Vs.
AMBIENT TEMPERATURE

Blue — VB-D : InGaN

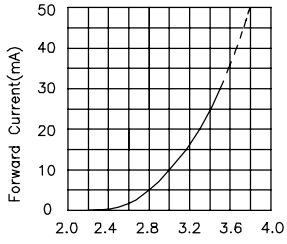

FORWARD CURRENT Vs.
FORWARD VOLTAGE

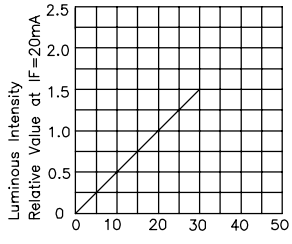

LUMINOUS INTENSITY Vs.
FORWARD CURRENT

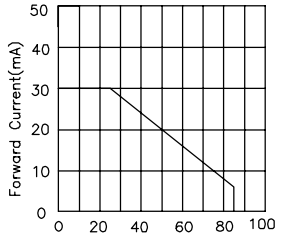

FORWARD CURRENT
DERATING CURVE

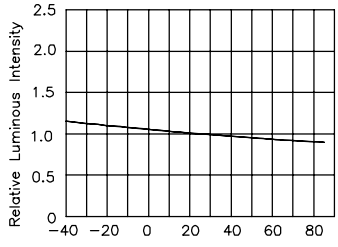

LUMINOUS INTENSITY Vs.
AMBIENT TEMPERATURE

BIN CODE SYSTEMS

SELECTION CODE FOR STANDARD AND LOW CURRENT LEDS

(T_A=25°C Tolerance +/-15% IF<15mA)

Group	Light intensity in mcd		Group	Light intensity in mcd	
	Min.	Max.		Min.	Max.
F	0.1	0.2	W	120	180
G	0.2	0.35	X	180	250
H	0.35	0.5	Y	250	320
I	0.5	0.8	Z	320	450
K	0.8	1.2	ZA	450	550
L	1.2	2	ZB	550	700
M	2	4	ZC	700	1000
N	4	6	ZD	1000	1600
P	6	10	ZE	1600	2200
Q	10	15	ZF	2200	2800
R	15	20	ZG	2800	3400
S	20	30	ZH	3400	4300
T	30	50	ZM	4300	5200
U	50	80	ZN	5200	6300
V	80	120	ZP	6300	7400

SELECTION CODE FOR NPN PHOTOTRANSISTORS

(T_A=25°C Tolerance +/-15%)

Group	Photocurrent(mA)		Group	Photocurrent(mA)	
	Min.	Max.		Min.	Max.
F	0.1	0.2	L	1.2	2
G	0.2	0.35	M	2	4
H	0.35	0.5	N	4	6
I	0.5	0.8	P	6	10
K	0.8	1.2	-	-	-

SELECTION CODE FOR INFRARED EMITTING DIODES

(T_A=25°C Tolerance +/-15%)

Group	Radiant intensity in mW/sr		Group	Radiant intensity in mW/sr	
	Min.	Max.		Min.	Max.
AK	0.8	1.2	D	8	12
AL	1.2	2	E	12	20
A	2	3	F	20	40
B	3	5	G	40	55
C	5	8	H	55	80

SELECTION CODE FOR SUPER BRIGHT LEDS

(T_A=25°C Tolerance +/-15% IF≥15mA)

Group	Light intensity in mcd		Group	Light intensity in mcd	
	Min.	Max.		Min.	Max.
A	2	3	ZA	3100	3600
B	3	5	ZB	3600	4200
C	5	8	ZC	4200	5000
D	8	12	ZD	5000	6000
E	12	20	ZE	6000	7000
F	20	40	ZF	7000	8000
G	40	55	ZG	8000	9000
H	55	80	ZH	9000	11000
M	80	120	ZM	11000	14000
N	120	200	ZN	14000	18000
P	200	300	ZP	18000	22000
Q	300	400	ZQ	22000	27000
R	400	500	ZR	27000	35000
S	500	700	ZS	35000	43000
T	700	1000	ZT	43000	55000
U	1000	1300	ZU	55000	75000
V	1300	1600	ZV	75000	130000
W	1600	1900	ZW	130000	200000
X	1900	2300	ZX	200000	320000
Y	2300	2700	ZY	320000	490000
Z	2700	3100	ZZ	490000	800000

SELECTION CODE FOR DISPLAYS

(T_A=25°C Tolerance +/-15%)

Group	Light intensity in ucd		Group	Light intensity in ucd	
	Min.	Max.		Min.	Max.
C	70	140	P	14000	21000
D	140	240	Q	21000	31000
E	240	360	R	31000	52000
F	360	560	S	52000	88000
G	560	900	T	88000	150000
H	900	1400	U	150000	255000
I	1400	2200	V	255000	433000
K	2200	3600	W	433000	736000
L	3600	5600	X	736000	1251000
M	5600	9000	Y	1251000	2126000
N	9000	14000	Z	2126000	3614000

BIN CODE SYSTEMS

SELECTION CODE FOR LUMINOUS FLUX
(T_A=25°C; Tolerance: +/-15%)

Group	Luminous Flux in lm		Group	Luminous Flux in lm	
	Min.	Max.		Min.	Max.
A1	0.5	0.6	B10	50	60
A2	0.6	0.7	B11	60	70
A3	0.7	0.8	B12	70	80
A4	0.8	1	B13	80	90
A5	1	1.2	B14	90	100
A6	1.2	1.4	C1	100	120
A7	1.4	1.7	C2	120	140
A8	1.7	2	C3	140	160
A9	2	2.4	C4	160	180
A10	2.4	2.9	C5	180	210
A11	2.9	3.5	C6	210	240
A12	3.5	4.2	C7	240	280
A13	4.2	5	C8	280	320
A14	5	6	C9	320	370
A15	6	7.2	C10	370	430
A16	7.2	8.6	C11	430	490
A17	8.6	10	C12	490	560
B1	10	12	C13	560	640
B2	12	14	C14	640	740
B3	14	17	C15	740	850
B4	17	20	C16	850	1000
B5	20	24	D1	1000	1200
B6	24	29	D2	1200	1400
B7	29	35	D3	1400	1600
B8	35	42	D4	1600	1800
B9	42	50	D5	1800	2100

COLOR CODE FOR GREEN LEDS + DISPLAYS
(T_A=25°C; Tolerance: +/-1nm)

Group	Dom. Wavelength (nm)			
	Min.	Max.	Min.	Max.
0	556	559	-	-
1	559	561	515	520
2	561	563	520	525
3	563	565	525	530
4	565	567	530	535
5	567	569	535	540
6	569	571	-	-
7	571	573	-	-
8	573	575	-	-

COLOR CODE FOR BLUE LEDS + DISPLAYS
(T_A=25°C; Tolerance: +/-1nm)

Group	Dom. Wavelength (nm)		Group	Dom. Wavelength (nm)	
	Min.	Max.		Min.	Max.
1	445	450	3A	471	473
2	450	455	3B	473	475
3	455	460	4A	475	477
1A	460	463	4B	477	479
1B	463	466	5A	479	481
2A	466	469	5B	481	483
2B	469	471	5C	483	486

COLOR CODE FOR YELLOW LEDS + DISPLAYS
(T_A=25°C; Tolerance: +/-1nm)

Group	Dom. Wavelength (nm)		Group	Dom. Wavelength (nm)	
	Min.	Max.		Min.	Max.
1	581	584	5	590	592
2	584	586	6	592	594
3	586	588	7	594	597
4	588	590	8	597	600

SOLDERING INSTRUCTIONS

Types	Dip soldering / * wave soldering			Iron soldering (with 1.5mm iron tip)		
	Temperature of the soldering bath	Maximum soldering time	Distance from solder joint to package	Temperature of soldering iron	Maximum soldering time	Distance from solder joint to package
LEDS	<=260°C	3s	>=2mm	<=350°C	3s	>2mm
	<=260°C	5s	>=5mm	<=350°C	5s	>5mm
SMDS	-	-	-	<=350°C	3s (one time only)	-
DISPLAYS	*<=260°C	*3s	*>2mm	<=350°C	3s	>2mm
PHOTOCOUPLER	<=260°C	3s	>2mm	<=310°C	3s	-
	-	-	-	<=260°C	10s	-

APPLICATION NOTES

General Notes

1. We recommend manual soldering operations only for repair and rework purposes. The soldering iron should not exceed 30W in power. The maximum soldering temperature is 300°C for Pb-Sn solder and 350°C for lead-free solder for normal lamps and displays. For blue (typ.:465nm), green (typ.:525nm), and all white LEDs, the maximum soldering iron temperature is 280°C. Do not place the soldering iron on the component for more than 3 seconds.

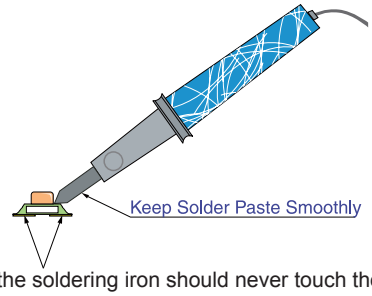

2. The tip of the soldering iron should never touch the epoxy lens.
3. Do not apply stress to the leads when the component is heated above 85°C, otherwise internal wire bonds may be damaged.
4. Through-Hole LEDs are incompatible with reflow soldering.
5. If the LED will undergo multiple soldering passes or face other processes where the part may be subjected to intense heat, please check with Kingbright for compatibility.
6. SMD products must be mounted according to specified soldering pad patterns. Refer to the product datasheet for details. Solder paste must be evenly applied to each soldering pad to insure proper bonding and positioning of the component.

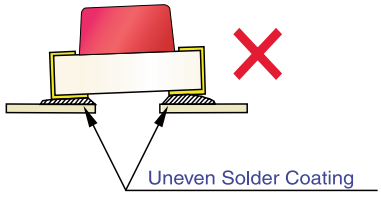

7. After soldering, allow at least three minutes for the component to cool down to room temperature before further operations.
8. Recommended PCB pin hole diameters for display products are listed below :
   Round pin type : 2 x pin diameters
   Square pin type :

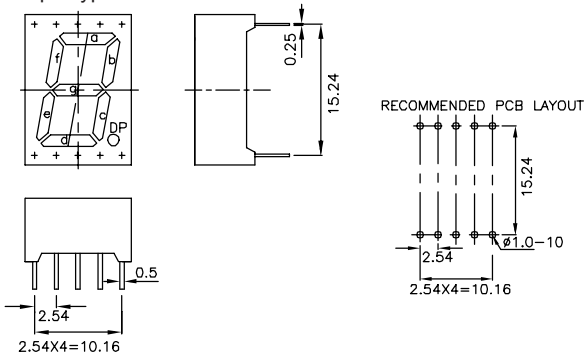

9. Data subject to change without notice. For additional detail of application notes, product information, and disclaimers, please visit our website at http://www.kingbright.com/application_notes.

Recommended Wave Soldering Profiles For Kingbright Through-Hole Products

1. Lead-Free Wave Soldering Profile

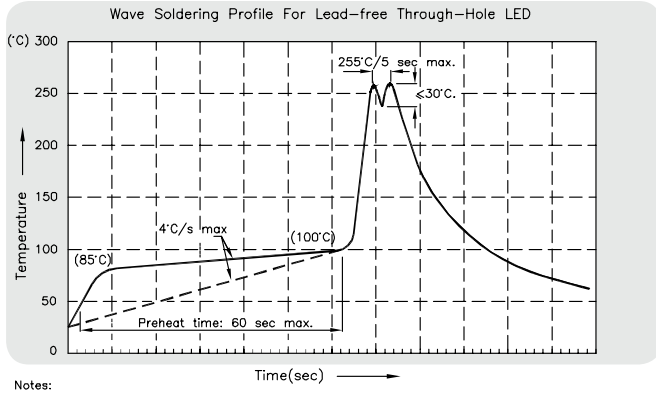

Notes:
1.Recommend pre–heat temperature of 105°C or less (as measured with a thermocouple attached to the LED pins) prior to immersion in the solder wave with a maximum solder bath temperature of 260°C
2.Peak wave soldering temperature between 245°C ~ 255°C for 3 sec (5 sec max).
3.Do not apply stress to the epoxy resin while the temperature is above 85°C.
4.Fixtures should not incur stress on the component when mounting and during soldering process.
5.SAC 305 solder alloy is recommended.
6.No more than one wave soldering pass.
7.During wave soldering, the PCB top–surface temperature should be kept below 105°C.

2. Wave Soldering Profile With Pb-Sn Solder

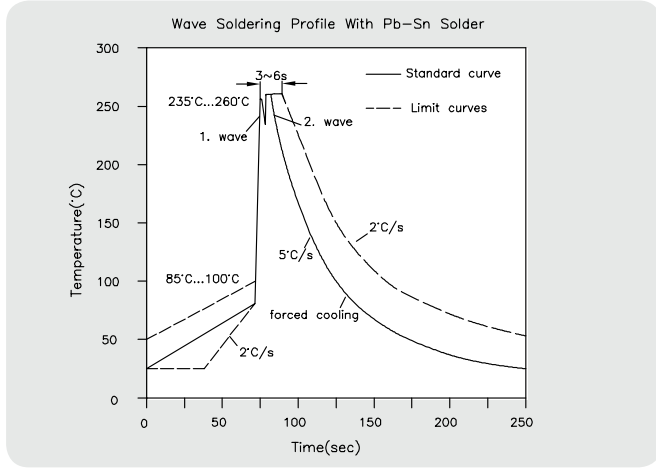

Recommended Reflow Soldering Profiles For Kingbright SMD Products

1. Lead-Free Reflow Soldering Profile

No more than two soldering passes with the recommended profile.

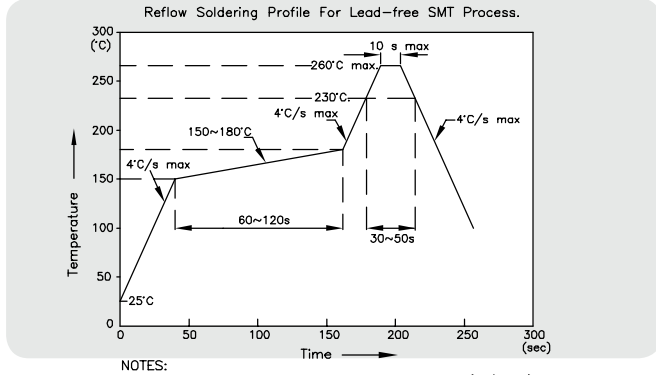

NOTES:
1.We recommend the reflow temperature 245°C(+/–5°C).The maximum soldering temperature should be limited to 260°C.
2.Don't cause stress to the epoxy resin while it is exposed to high temperature.
3.Number of reflow process shall be 2 times or less.

2. Reflow Soldering Profiles With Pb-Sn Solder

No more than two soldering passes with the recommended profile.

Recommended Reflow Profile

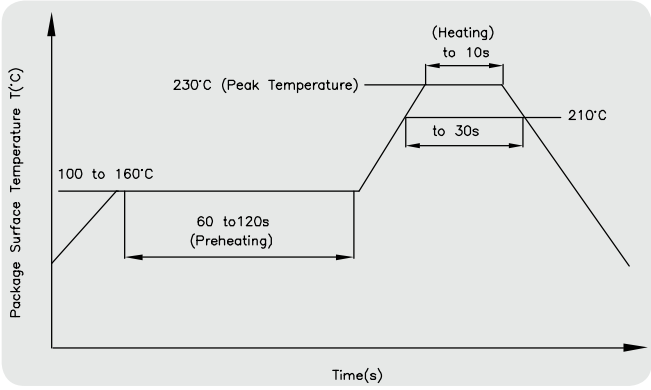

Static Electricity and Voltage Spikes in InGaN/GaN Products

InGaN/GaN products are sensitive to electrostatic discharge (ESD) and other transient voltage spikes. ESD and voltage spikes can affect the component's reliability, increase reverse current, and decrease forward voltage. This may result in reduced light intensity or cause component failure.

Kingbright InGaN/GaN products are stored in anti-static packaging for protection during transport and storage. Please note the anti-static measures below when handling Kingbright InGaN/GaN products.

Design Precautions

Products using InGaN/GaN components must incorporate protection circuitry to prevent ESD and voltage spikes from reaching the vulnerable component.

ESD Protection During Production

Static discharge can result when static–sensitive products come in contact with the operator or other conductors. The following procedures may decrease the possibility of ESD damage:

1. Minimize friction between the product and surroundings to avoid static buildup.
2. All manufacturing and testing equipment should be grounded.
3. All personnel in an ESD protected area should wear antistatic garments and wrist straps.
4. Set up ESD protection areas using grounded metal plating for component handling.
5. All workstations that handle IC and ESD-sensitive components must maintain an electrostatic potential of 150V or less.
6. Relative humidity levels maintained between 40% and 60% in production area are recommended to avoid the build-up of static electricity – Ref JEDEC/JESD625-A and JEDEC/J-STD-033.
7. Use anti-static packaging for transport and storage.
8. All anti-static equipment and procedures should be periodically inspected and evaluated for proper functionality.

LED Mounting Method

1. The lead pitch of the LED must match the pitch of the mounting holes on the PCB during component placement. Lead-forming may be required to insure the lead pitch matches the hole pitch. Refer to (Fig.1) for proper lead forming procedures.

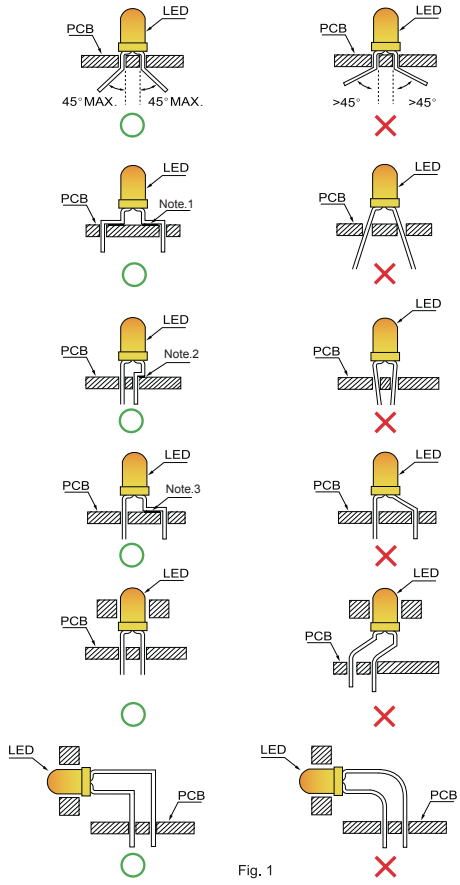

Fig. 1

"○" Correct mounting method "✕" Incorrect mounting method

2. When soldering wires to the LED, each wire joint should be separately insulated with heat-shrink tube to prevent short-circuit contact. Do not bundle both wires in one heat shrink tube to avoid pinching the LED leads. Pinching stress on the LED leads may damage the internal structures and cause failure. (Fig.2)

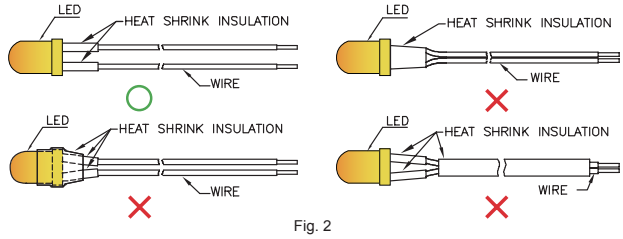

Fig. 2

3. Use stand-offs (Fig.3) or spacers (Fig.4) to securely position the LED above the PCB.

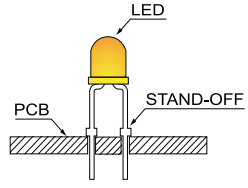

Fig. 3

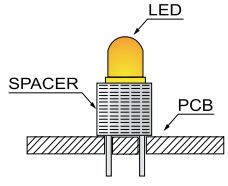

Fig. 4

4. Do not route PCB trace in the contact area between the leadframe and the PCB to prevent short-circuits.

Lead Forming Procedures

1. Maintain a minimum of 3mm clearance between the base of the LED lens and the first lead bend. (Fig. 5 and 6)

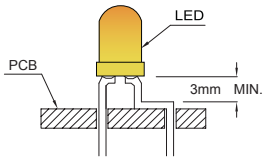

Fig. 5

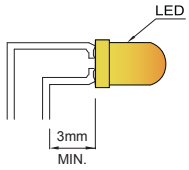

Fig. 6

2. Lead forming or bending must be performed before soldering, never during or after soldering.
3. Do not stress the LED lens during lead-forming in order to prevent fractures in the epoxy lens and damage the internal structures.
4. During soldering, component covers and holders should leave clearance to avoid placing damaging stress on the LED during soldering. (Fig. 7)

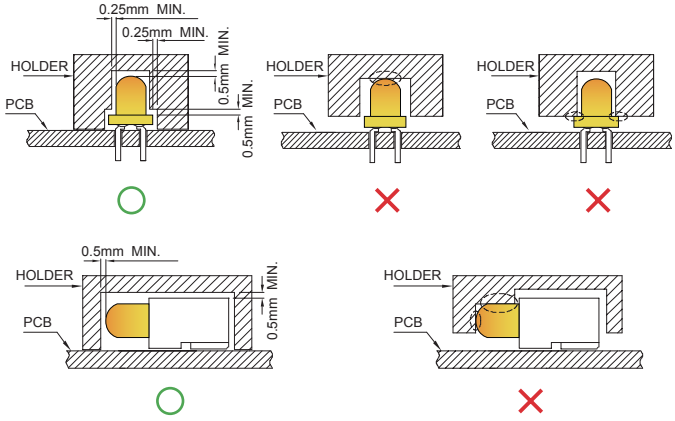

Fig. 7

5. During lead forming, use tools or jigs to hold the leads securely so that the bending force will not be transmitted to the LED lens and its internal structures. Do not perform lead forming once the component has been mounted onto the PCB. (Fig. 8)

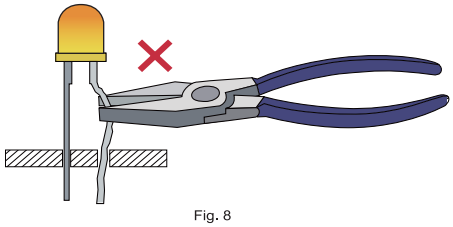

Fig. 8

6. Do not bend the leads more than twice. (Fig. 9)

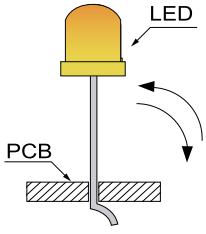

Fig. 9

7. After soldering or other high-temperature assembly, allow the LED to cool down to 50°C before applying outside force (Fig. 10). In general, avoid placing excess force on the LED to avoid damage. For any questions please consult with Kingbright representative for proper handling procedures.

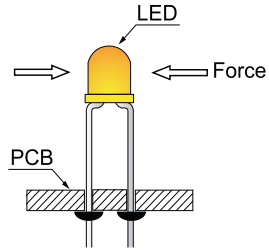

Fig. 10

Cleaning

1. Do not use harsh organic solvents for cleaning because they may cloud or damage the LED lens.
2. Isopropyl alcohol or deionized water are recommended solvents for cleaning.
3. Special attention should be taken if other chemicals are used for cleaning because other solvents may damage the epoxy in the lens or housing.
4. The cleaning process should take place at room temperature and the devices should not be washed for more than one minute.
5. When water is used for cleaning, immediately use forced-air drying to remove excess moisture from the LED.
6. Do not use acidic solvents or unknown chemicals to clean the component. Before using any cleaning solvent, check to insure the chemical composition will not corrode or damage epoxy resin, organosilicates, silicone resin, and silver plating, in order to prevent accidental damage or degraded function.
7. Typically we suggest ethanol for cleaning SMD LEDs. Lightly wipe away any surface contaminants and avoid excessive force that might damage the lens surface or internal structures. Allow to dry under room temperature conditions before further usage. Do not soak the SMD LED in ethanol or other solutions.

Miscellaneous Design Notes

1. Protective current-limiting resistors may be necessary to operate the LEDs within the specified range.
2. LEDs mounted in parallel should each be placed in series with its own current-limiting resistor.

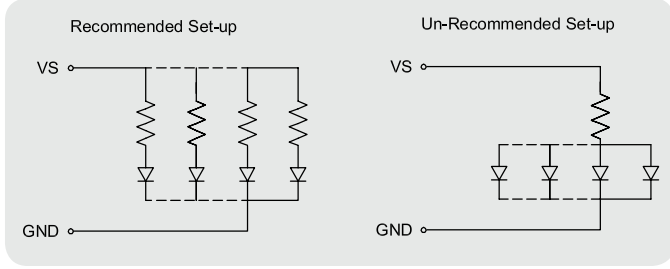

3. The driving circuit should be designed to avoid reverse voltages and transient voltage spikes when the circuit is powered up or shut down.
4. High temperatures can reduce device performance and reliability. Keep LED devices away from heat source for best performance.
5. The safe operation current should be chosen after considering the maximum ambient temperature of the operating environment.

6. During soldering, SMD components should be mounted such that the leads are placed perpendicular to the direction of PCB travel to ensure the solder on each lead melts simultaneously during reflow.

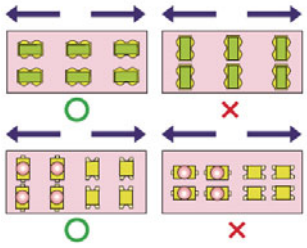

7. Optimal usage of high-power LED devices requires careful design by the end-user to optimize heat dissipation, such as increasing the size of the metal backing around the soldering pad. Refer to the product datasheet for specific design recommendations regarding heat dissipation.

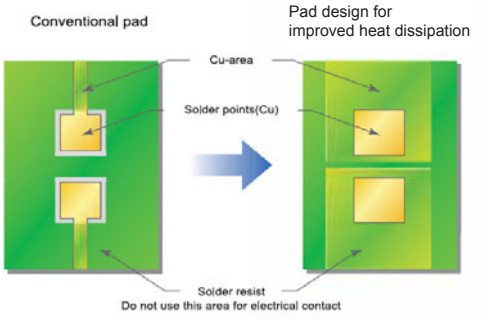

Restrictions on Product Use

1. Not all devices and product families are available in every country.
2. The light output from UV, blue, white, and other high-power LEDs may cause injury to the human eye when viewed directly.
3. LED devices may contain gallium arsenide (GaAs) material. GaAs is harmful if ingested. GaAs dust and fumes are toxic. Do not break, cut, or pulverize LED devices. Do not dissolve LEDs in chemical solvents.
4. Semiconductor devices can fail or malfunction due to their sensitivity to electrical fluctuation and physical stress. It is the responsibility of the user to observe all safety standards when using Kingbright products, in order to avoid situations in which the malfunction or failure of a Kingbright product could cause injury, property damage, or the loss of human life. In developing designs, please insure that Kingbright products are used within specified operating conditions as set forth in the most recent product specification datasheet.
5. For LEDs with silicone encapsulation such as the AA and AT series, the outer diameter of the pick-up nozzle must be longer than that of the LED's light emitting area. i. e. A >C, and B shall be shorter than the width of the LED.

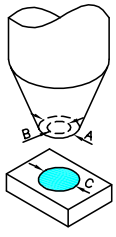

A is the outer diameter pick-up nozzle
B is the inner diameter of the nozzle
C is the diameter of lens

6. The size of the nozzle should be as large as possible if the tape is not involved.
7. The LEDs should not be exposed to an environment where high level of moisture or corrosive gases are present.
8. Prolonged reverse bias should be avoided, as it could cause metal migration, leading to an increase in leakage current or causing a short circuit.
9. Excess driving current and/or operating temperature higher than recommended conditions may result in severe light degradation or premature failure.
10. It is not recommended to assemble LEDs of different color or intensity bins together, as there may be perceivable color or intensity variation. Each bag contains parts from the same bin code. The bin code is printed on the bag's label as below.

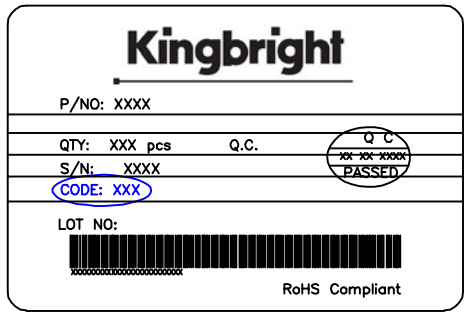

Storage Control

For SMD Products

1. Before a sealed moisture barrier bag (MBB) is opened, contained LEDs shall be kept in an environment with temperature below 40°C and humidity below 90% RH. MBB shall be kept sealed until LEDs contained in the bag are ready to be used. Once MBB is opened, it shall be stored in an environment with temperature range of 5°C~30°C and humidity below 60% RH.
2. Once MBB is opened, all contained LEDs shall complete soldering process within the specified time frame according to the conditions labeled on Kingbright MBB.
3. When the 10% spot of a humidity indicator card (HIC) from MBB indicates wet, the contained LEDs shall be baked according to the baking conditions labeled on Kingbright MBB before mounting.

For Through-Hole Products

1. Avoid continued exposure to the condensing moisture environment and keep the product away from rapid transitions in ambient temperature.
2. LEDs should be stored with temperature ≤30°C and relative humidity < 60%.
3. Product in the original sealed package is recommended to be assembled within 72 hours of opening. Product in opened package for more than a week should be baked for 30 (+10/-0) hours at 85 ~ 100°C.
4. The LED leadframe surface is plated with silver. When the leadframe is stored under high-humidity environments, or exposed to certain chemical elements or gases, the surface may become discolored. Please maintain the cleanliness of the storage environment.
5. If the storage conditions do not meet specification standards, the component pins may become oxidized requiring re-plating and re-sorting before use. Suggest customers consume LEDs as soon as possible, and avoid long-term storage of large inventories.

CIE CHROMATICITY DIAGRAM

White Bin Code

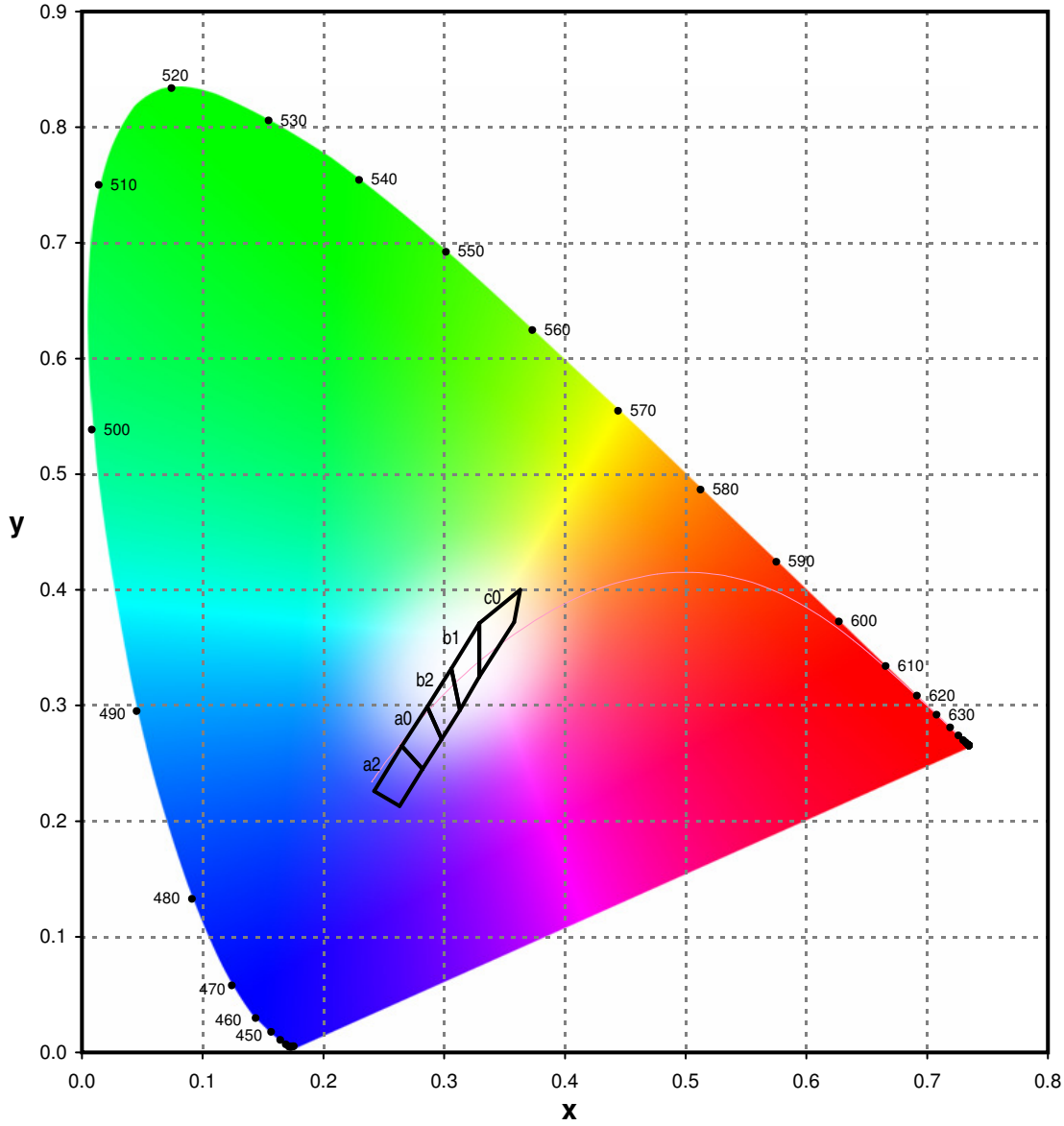

Bin	x	y
a2	0.263	0.213
	0.282	0.245
	0.265	0.265
	0.242	0.226
CCT: 15000K~		

Bin	x	y
b2	0.298	0.271
	0.313	0.296
	0.306	0.332
	0.286	0.299
CCT: 6800~9000K		

Bin	x	y
c0	0.329	0.325
	0.358	0.372
	0.363	0.400
	0.329	0.371
CCT: 4600~5600K		

Bin	x	y
a0	0.282	0.245
	0.298	0.271
	0.286	0.299
	0.265	0.265
CCT: 9000~15000K		

Bin	x	y
b1	0.313	0.296
	0.329	0.325
	0.329	0.371
	0.306	0.332
CCT: 5600~6800K		

CIE CHROMATICITY DIAGRAM

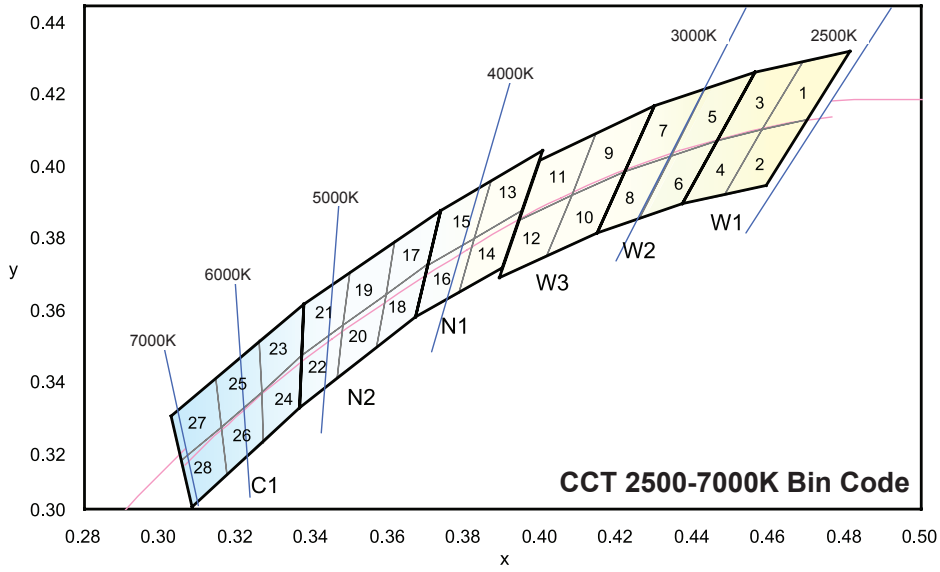

Group	Chromaticity Regions	CCT (K)		
		Min.	Typ.	Max.
W1	1, 2, 3, 4	2580	2700	2870
W2	5, 6, 7, 8	2870	3000	3220
W3	9, 10, 11, 12	3220	3500	3710

Group	Chromaticity Regions	CCT (K)		
		Min.	Typ.	Max.
N1	13, 14, 15, 16	3710	4000	4260
N2	17, 18, 19, 20, 21, 22	4260	4700	5310
C1	23, 24, 25, 26, 27, 28	5310	6000	7040

	x	y		x	y		x	y		x	y
1	0.4582	0.4099	8	0.4147	0.3814	15	0.3702	0.3722	22	0.3481	0.3557
	0.4687	0.4289		0.4221	0.3984		0.3736	0.3874		0.3370	0.3472
	0.4813	0.4319		0.4342	0.4028		0.3869	0.3958		0.3364	0.3328
	0.4700	0.4126		0.4259	0.3853		0.3825	0.3798		0.3466	0.3411
2	0.4483	0.3919	9	0.4080	0.3916	16	0.3670	0.3578	23	0.3376	0.3616
	0.4582	0.4099		0.4146	0.4089		0.3702	0.3722		0.3260	0.3512
	0.4700	0.4126		0.4299	0.4165		0.3825	0.3798		0.3265	0.3371
	0.4593	0.3944		0.4221	0.3984		0.3783	0.3646		0.3370	0.3472
3	0.4465	0.4071	10	0.4017	0.3751	17	0.3736	0.3874	24	0.3370	0.3472
	0.4562	0.4260		0.4080	0.3916		0.3616	0.3788		0.3265	0.3371
	0.4687	0.4289		0.4221	0.3984		0.3592	0.3641		0.3270	0.3230
	0.4582	0.4099		0.4147	0.3814		0.3703	0.3726		0.3364	0.3328
4	0.4373	0.3893	11	0.3941	0.3848	18	0.3703	0.3726	25	0.3260	0.3512
	0.4465	0.4071		0.3996	0.4015		0.3592	0.3641		0.3144	0.3408
	0.4582	0.4099		0.4146	0.4089		0.3568	0.3495		0.3160	0.3274
	0.4483	0.3919		0.4080	0.3916		0.3670	0.3578		0.3265	0.3371
5	0.4342	0.4028	12	0.3889	0.3690	19	0.3616	0.3788	26	0.3265	0.3371
	0.4430	0.4212		0.3941	0.3848		0.3496	0.3702		0.3160	0.3274
	0.4562	0.4260		0.4080	0.3916		0.3481	0.3557		0.3175	0.3139
	0.4465	0.4071		0.4017	0.3751		0.3592	0.3641		0.3270	0.3230
6	0.4259	0.3853	13	0.3825	0.3798	20	0.3592	0.3641	27	0.3144	0.3408
	0.4342	0.4028		0.3869	0.3958		0.3481	0.3557		0.3028	0.3304
	0.4465	0.4071		0.4006	0.4044		0.3466	0.3411		0.3055	0.3177
	0.4373	0.3893		0.3950	0.3875		0.3568	0.3495		0.3160	0.3274
7	0.4221	0.3984	14	0.3783	0.3646	21	0.3496	0.3702	28	0.3160	0.3274
	0.4299	0.4165		0.3825	0.3798		0.3376	0.3616		0.3055	0.3177
	0.4430	0.4212		0.3950	0.3875		0.3370	0.3472		0.3081	0.3049
	0.4342	0.4028		0.3898	0.3716		0.3481	0.3557		0.3175	0.3139

INDEX

BA04-11 SERIES 52
BA56-11 SERIES 53
BA56-12 SERIES 53
BA56-13 SERIES 53
BC04-11 SERIES 52
BC56-11 SERIES 53
BC56-12 SERIES 53
BC56-13 SERIES 53
BL0102-14-34 86
BL0307-50-44 86
BL0307-50-46 86
CA04-41 SERIES 55
CA25-11 SERIES 54
CA25-12 SERIES 54
CA56-11 SERIES 56
CA56-12 SERIES 56
CA56-21 SERIES 56
CB-30 80
CB-50 80
CB-55 80
CC04-41 SERIES 55
CC25-11 SERIES 54
CC25-12 SERIES 54
CC56-11 SERIES 56
CC56-12 SERIES 56
CC56-21 SERIES 56
DA03-11 SERIES 50
DA04-11SERIES 50
DA08-11 SERIES 52
DA56-11 SERIES 51
DA56-51 SERIES 51
DC03-11SERIES 50
DC04-11SERIES 50
DC-05 SERIES 68
DC08-11 SERIES 52
DC-10 SERIES 68
DC-20/20 SERIES 68
DC56-11 SERIES 51
DC56-51 SERIES 51
DD-12 SERIES 68
DE/2 SERIES 69
DE/4 SERIES 69
DF-3 SERIES 69
DLA/6 SERIES 29
DLC/6 SERIES 29
KA-2214 SERIES 21
KA-2810A SERIES 16
KA-3021 SERIES 21
KA-3022CGSK-4.5SF 22
KA3030BR34-S2 3
KA-3528 SERIES 22
KA-3528AVU/ SERIES 79
KA-3529A SERIES 2
KA-3535 SERIES 2
KA-4008 SERIES 16
KA-4040 SERIES 17
KA-5630 SERIES 2
KAA-3528 SERIES 20
KAA-3528AVU/ARBGS-112 79
KAA-3528RGBS-K11-C8-CC 6
KAAF-3529BGRS-132 6
KAAF-5050RGBS-13 6
KB-2300SEKW 70
KB-2350SEKW 70
KB-2400SYKW 70
KB-2450SYKW 70
KB-2500CGKD 70
KB-2550CGKD 70
KB-2600SEKW 70
KB-2620SEKW 71
KB-2635SEKW 71
KB-2655SEKW 70
KB-2670SEKW 71
KB-2685SEKW 71
KB-2700SYKW 70
KB-2720SYKW 71
KB-2735SYKW 71
KB-2755SYKW 70
KB-2770SYKW 71
KB-2785SYKW 71
KB-2800CGKD 70
KB-2820CGKD 71
KB-2835CGKD 71
KB-2855CGKD 70
KB-2870CGKD 71
KB-2885CGKD 71
KB3541NT 89
KB354NT 89
KB355NT 88
KB356NT 89
KB357NT 89
KB814 87
KB8141 87
KB815 87
KB816 87
KB817 87
KB817-B 88
KB817-M 88
KB851 88
KB852 88
KB-A100SURKW 70
KB-B100SURKW 70
KB-C100SURKW 70
KB-D100SURKW 70
KB-E100SURKW 71
KB-F100SURKW 71
KB-G100SURKW 71
KB-H100SURKW 71
KCDX02 SERIES 40
KCDX03 SERIES 40
KCDX04 SERIES 41
KCDX39 SERIES 41
KCDX51 SERIES 42
KCDX56 SERIES 42
KCPDX04 SERIES 43
KCPSX04 SERIES 43
KCSX02 SERIES 40
KCSX03 SERIES 40
KCSX04 SERIES 41
KCSX39 SERIES 41
KCSX51 SERIES 42
KCSX56 SERIES 42
KM-23ESGC 19
KM-23-F SERIES 23
KM2520EH/1 SERIES 72
KM2520F3C03 82
KM2520QBC-D08 23
KM2520xxx01 SERIES 26
KM2520xxx03 SERIES 22
KM2520xxx09 SERIES 23
KP-1608 SERIES 10
KP-1608F3C 82
KP-1608P1C 84
KP-1608SF4C 82
KP-2012 SERIES 11
KP-2012F3C 82
KP-2012P3C 84
KP-2012SF4C 82
KP-3216 SERIES 13
KP-3216P3C 84
KPA-1606 SERIES 15
KPA-2107 SERIES 15
KPA-3010 SERIES 15
KPA-3010F3C 82
KPA-3010P3C 84
KPA-3210 SERIES 16
KPB-3025 SERIES 19
KPBA-3010 SERIES 18
KPBD-3224 SERIES 20
KPBDA-3020SURKCGKC-PF 19
KPBL-3025 SERIES 19
KPC-1608 SERIES 10
KPD-3224 SERIES 14
KPED-3528 SERIES 14
KPFA-2507BRGC-11 5
KPFA-3010RGBC-11 5
KPFA-3011BZ1RGZ1C-132/F 5
KPG-0603 SERIES 7
KPG-1005 SERIES 7
KPG1-1608 SERIES 8
KPG-1608 SERIES 8
KPG-1608 SERIES 8
KPGA-1602 SERIES 14
KPGF-0606GBRC-120 4
KPGF-1011GBRC-120 4
KPH-1608 SERIES 9
KPHB-1608 SERIES 17
KPHBM-2012 SERIES 18
KPHCM-2012 SERIES 11
KPHD-1608 SERIES 9
KPHHS-1005 SERIES 7
KPHM-1608 SERIES 8
KPL-3015 SERIES 12
KPPA-3010 SERIES 15
KPS-3227SP1C 24
KPS-5130PD7C 24
KPT-1608 SERIES 9
KPT-2012 SERIES 11
KPT-3216 SERIES 12
KPTB-1612 SERIES 17
KPTB-1615 SERIES 18
KPTBD-3216 SERIES 20
KPTC-3212 SERIES 12
KPTD-1608 SERIES 10
KPTD-3216 SERIES 13
KPTF-1616RGBC-11 4
KPTL-3216 SERIES 13
KPTR-3216 SERIES 21
KRA021 92
KRB031 92
KRC011 93
KTDS-3536 SERIES 3
KTIR0311S 91
KTIR0411S 91
KTIR0511S 91
KTIR0611S 91
KTIR0711S 93
KTIR0721DS 93
KTIR0811S 93
KTIR0821DS 93
KTIR0911S 92
L-103 SERIES 32
L-1034 SERIES 30
L-1043 SERIES 69
L-10934VBC/DS-D 25
L-113 SERIES 32
L-1154 SERIES 26
L-115V SERIES 33
L-115W SERIES 34
L-117EGWT 36
L-119EGWT 36
L-13 SERIES 30
L-130WARA/1 SERIES 73
L-130WCP/2 SERIES 76
L-130WDT/1 SERIES 73
L-132X SERIES 27
L-1384AD/1 SERIES 73
L-1384AL/1 SERIES 74
L-1387QMP/1 SERIES 79
L-138A8QMP/1 SERIES 79
L-144 SERIES 31
L-1503 SERIES 29
L-1503EB/2 SERIES 77
L-150A9VS/1 SERIES 74
L-1533BQ/1 SERIES 74
L-154A4 SERIES 35
L-1553 SERIES 32
L-169X SERIES 31
L-17114VBC/DS-D 25
L-174A2 SERIES 27
L-19294VBC/DS-D 25
L-19804VBC/DS-D 25

INDEX

L-2774 SERIES 30
L-34 SERIES 27
L-34F3C 83
L-34SF4C 83
L-36B SERIES 38
L-3DP3BT 85
L-3V SERIES 34
L-4060 SERIES 26
L-4060VH/2 SERIES 75
L-4060XHA/3 SERIES 77
L-424 SERIES 33
L-42WUM/1 SERIES 73
L-43 SERIES 28
L-47X SERIES 32
L-483 SERIES 33
L-489EGWT 36
L-5603 SERIES 30
L-56B SERIES 38
L-57 SERIES 34
L-59 SERIES 35
L-59BL/1 SERIES 74
L-59CB/1 SERIES 75
L-59-TNR2.54 39
L-63 SERIES 28
L-7104 SERIES 27
L-7104EB/2 SERIES 75
L-7104F3BT 83
L-7104F3C 83
L-7104GO/2 SERIES 75
L-7104L SERIES 37
L-7104MD/2 SERIES 76
L-7104RS/1 SERIES 72
L-7104RT/2 SERIES 76
L-7104SA/3 SERIES 77
L-7104SB/4 SERIES 78
L-7104-TNR2.54 39
L-7104xxD-12V SERIES 37
L-7104xxD-14V SERIES 37
L-7104xxD-5V SERIES 37
L-7104ZH/1 SERIES 72
L-710A8CB/1 SERIES 72
L-7113 SERIES 28
L-7113BR-12.7/ SERIES 78
L-7113BR-9.52/ SERIES 78
L-7113F3BT 83
L-7113F3C 83
L-7113L SERIES 37
L-7113P3C 85
L-7113SF4BT 83
L-7113SF4C 83
L-7113SF6C 83
L-7113SF7C 83
L-7113SRSGW 34
L-7113-TNR2.54 39
L-7113xxD-12V SERIES 37
L-7113xxD-5V SERIES 37
L-7143 SERIES 29
L-73EB/2 SERIES 76
L-7676C SERIES 38
L-7679C1 SERIES 38
L-793 SERIES 29
L-813 SERIES 29
L-819 SERIES 35
L-835/2 SERIES 69
L-908A8 SERIES 26
L-914 SERIES 31
L-914CK/4 SERIES 78
L-91A6 SERIES 35
L-91A7 SERIES 31
L-9294 SERIES 28
L-937 SERIES 33
L-96A8YVP/1QBD-D-0L 78
L-9763 SERIES 31
PDA54-11 SERIES 59
PDA54-12 SERIES 59
PDC54-11 SERIES 59
PDC54-12 SERIES 59
PSA05-11 SERIES 57
PSA05-12 SERIES 57
PSA08-11 SERIES 57
PSA08-12 SERIES 57
PSA12-11 SERIES 58
PSA23-11 SERIES 58
PSC05-11 SERIES 57
PSC05-12 SERIES 57
PSC08-11 SERIES 57
PSC08-12 SERIES 57
PSC12-11 SERIES 58
PSC23-11 SERIES 58
REEL DIMENSION 39
RTC-31 80
RTC-32 80
RTC-51 80
RTC-52 80
RTF-1090 81
RTF-5010 81
RTF-5020 81
RTF-8080 81
SA03-11 SERIES 44
SA04-11 SERIES 45
SA04-12 SERIES 45
SA05-11 SERIES 46
SA08-11 SERIES 47
SA08-12 SERIES 47
SA08-21 SERIES 47
SA10-11 SERIES 47
SA10-21 SERIES 47
SA15-11 SERIES 48
SA18-11 SERIES 48
SA23-11 SERIES 49
SA23-12 SERIES 49
SA32-11 SERIES 44
SA36-11 SERIES 44
SA39-11 SERIES 45
SA39-12 SERIES 45
SA40-18 SERIES 49
SA40-19 SERIES 49
SA43-11 SERIES 45
SA43-13 SERIES 45
SA52-11 SERIES 46
SA56-11 SERIES 46
SA56-21 SERIES 46
SBA15-11 SERIES 48
SBA18-11 SERIES 48
SBA23-11 SERIES 49
SBC15-11 SERIES 48
SBC18-11 SERIES 48
SBC23-11 SERIES 49
SC03-12 SERIES 44
SC04-11 SERIES 45
SC04-12 SERIES 45
SC05-11 SERIES 46
SC08-11 SERIES 47
SC08-12 SERIES 47
SC08-21 SERIES 47
SC10-11 SERIES 47
SC10-21 SERIES 47
SC15-11 SERIES 48
SC18-11 SERIES 48
SC23-11 SERIES 49
SC23-12 SERIES 49
SC32-11 SERIES 44
SC36-11 SERIES 44
SC39-11 SERIES 45
SC39-12 SERIES 45
SC40-18 SERIES 49
SC40-19 SERIES 49
SC43-11 SERIES 45
SC43-13 SERIES 45
SC52-11 SERIES 46
SC56-11 SERIES 46
SC56-21 SERIES 46
TA03-11 SERIES 60
TA07-11 SERIES 60
TA12-11 SERIES 61
TA12-22 SERIES 62
TA12-23 SERIES 62
TA15-11 SERIES 63
TA16-11 SERIES 60
TA20-11 SERIES 64
TA23-11 SERIES 65
TA24-11 SERIES 66
TA40-11 SERIES 67
TBA12-11 SERIES 61
TBA12-12 SERIES 61
TBA12-22 SERIES 62
TBA15-11 SERIES 63
TBA20-11 SERIES 64
TBA20-12 SERIES 64
TBA20-22 SERIES 64
TBA23-11 SERIES 65
TBA23-12 SERIES 65
TBA24-11 SERIES 66
TBA24-22 SERIES 66
TBA40-11 SERIES 67
TBC12-11 SERIES 61
TBC12-12 SERIES 61
TBC12-22 SERIES 62
TBC15-11 SERIES 63
TBC20-11 SERIES 64
TBC20-12 SERIES 64
TBC20-22 SERIES 64
TBC23-11 SERIES 65
TBC23-12 SERIES 65
TBC24-11 SERIES 66
TBC24-22 SERIES 66
TBC40-11 SERIES 67
TC07-11 SERIES 60
TC12-11 SERIES 61
TC12-22 SERIES 62
TC12-23 SERIES 62
TC15-11 SERIES 63
TC16-11 SERIES 60
TC20-11 SERIES 64
TC23-11 SERIES 65
TC24-11 SERIES 66
TC40-11 SERIES 67