STM32F101x8
STM32F101xB

Medium-density access line, ARM®-based 32-bit MCU with 64 or 128 KB Flash, 6 timers, ADC and 7 communication interfaces

Datasheet - production data

Features

- Core: ARM® 32-bit Cortex® -M3 CPU
  - 36 MHz maximum frequency, 1.25 DMIPS/MHz (Dhrystone 2.1) performance at 0 wait state memory access
  - Single-cycle multiplication and hardware division
- Memories
  - 64 to 128 Kbytes of Flash memory
  - 10 to 16 Kbytes of SRAM
- Clock, reset and supply management
  - 2.0 to 3.6 V application supply and I/Os
  - POR, PDR and programmable voltage detector (PVD)
  - 4-to-16 MHz crystal oscillator
  - Internal 8 MHz factory-trimmed RC
  - Internal 40 kHz RC
  - PLL for CPU clock
  - 32 kHz oscillator for RTC with calibration
- Low power
  - Sleep, Stop and Standby modes
  - V_{BAT} supply for RTC and backup registers
- Debug mode
  - Serial wire debug (SWD) and JTAG interfaces
- DMA
  - 7-channel DMA controller
  - Peripherals supported: timers, ADC, SPIs, I^2Cs and USARTs
- 1 × 12-bit, 1 µs A/D converter (up to 16 channels)
  - Conversion range: 0 to 3.6 V
  - Temperature sensor
- Up to 80 fast I/O ports

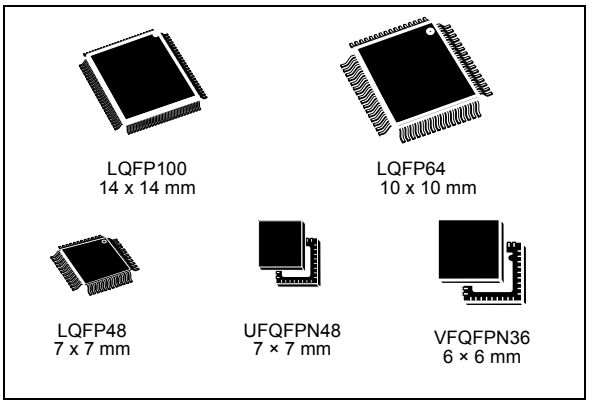

  - 26/37/51/80 I/Os, all mappable on 16 external interrupt vectors and almost all 5 V-tolerant
- Six timers
  - Three 16-bit timers, each with up to 4 IC/OC/PWM or pulse counter
  - 2 watchdog timers (Independent and Window)
  - SysTick timer: 24-bit downcounter
- Up to 7 communication interfaces
  - Up to 2 x I^2C interfaces (SMBus/PMBus)
  - Up to 3 USARTs (ISO 7816 interface, LIN, IrDA capability, modem control)
  - Up to 2 SPIs (18 Mbit/s)
- CRC calculation unit, 96-bit unique ID
- ECOPACK® packages

Table 1. Device summary

Reference	Part number
STM32F101x8	STM32F101C8, STM32F101R8 STM32F101V8, STM32F101T8
STM32F101xB	STM32F101RB, STM32F101VB, STM32F101CB STM32F101TB

This is information on a product in full production. www.st.com

sales@prom-elec.com / ООО ПРОМЭЛЕКТРОНИКА

Contents

1 Introduction 9

2 Description 10

2.1 Device overview 11

2.2 Full compatibility throughout the family 14

2.3 Overview 15

2.3.1 ARM® Cortex® -M3 core with embedded Flash and SRAM 15

2.3.2 Embedded Flash memory 15

2.3.3 CRC (cyclic redundancy check) calculation unit 15

2.3.4 Embedded SRAM 15

2.3.5 Nested vectored interrupt controller (NVIC) 15

2.3.6 External interrupt/event controller (EXTI) 16

2.3.7 Clocks and startup 16

2.3.8 Boot modes 16

2.3.9 Power supply schemes 16

2.3.10 Power supply supervisor 16

2.3.11 Voltage regulator 17

2.3.12 Low-power modes 17

2.3.13 DMA 18

2.3.14 RTC (real-time clock) and backup registers 18

2.3.15 Independent watchdog 18

2.3.16 Window watchdog 18

2.3.17 SysTick timer 19

2.3.18 General-purpose timers (TIMx) 19

2.3.19 I^2C bus 19

2.3.20 Universal synchronous/asynchronous receiver transmitter (USART) . . 19

2.3.21 Serial peripheral interface (SPI) 19

2.3.22 GPIOs (general-purpose inputs/outputs) 19

2.3.23 ADC (analog to digital converter) 20

2.3.24 Temperature sensor 20

2.3.25 Serial wire JTAG debug port (SWJ-DP) 20

3 Pinouts and pin description 21

4 Memory mapping 29

5 Electrical characteristics 30

5.1 Parameter conditions 30

5.1.1 Minimum and maximum values 30

5.1.2 Typical values 30

5.1.3 Typical curves 30

5.1.4 Loading capacitor 30

5.1.5 Pin input voltage 30

5.1.6 Power supply scheme 31

5.1.7 Current consumption measurement 32

5.2 Absolute maximum ratings 32

5.3 Operating conditions 33

5.3.1 General operating conditions 33

5.3.2 Operating conditions at power-up / power-down 34

5.3.3 Embedded reset and power control block characteristics 34

5.3.4 Embedded reference voltage 36

5.3.5 Supply current characteristics 36

5.3.6 External clock source characteristics 44

5.3.7 Internal clock source characteristics 49

5.3.8 PLL characteristics 50

5.3.9 Memory characteristics 51

5.3.10 EMC characteristics 51

5.3.11 Absolute maximum ratings (electrical sensitivity) 53

5.3.12 I/O current injection characteristics 53

5.3.13 I/O port characteristics 55

5.3.14 NRST pin characteristics 60

5.3.15 TIM timer characteristics 62

5.3.16 Communications interfaces 62

5.3.17 12-bit ADC characteristics 68

5.3.18 Temperature sensor characteristics 72

6 Package characteristics 73

6.1 Package mechanical data 73

6.2 UFQFPN48 package information 73

6.3 VFQFPN36 package information 76

6.4 LQFP100 package information 80
6.5 LQFP64 package information 83
6.6 LQFP48 package information 86
6.7 Thermal characteristics 90
6.7.1 Reference document 90
6.7.2 Evaluating the maximum junction temperature for an application 91

7 Ordering information scheme 92

8 Revision history 94

List of Tables

Table 1. Device summary . . . 1
Table 2. Device features and peripheral counts (STM32F101xx medium-density access line) . . . 11
Table 3. STM32F101xx family . . . 14
Table 4. Medium-density STM32F101xx pin definitions . . . 24
Table 5. Voltage characteristics . . . 32
Table 6. Current characteristics . . . 33
Table 7. Thermal characteristics . . . 33
Table 8. General operating conditions . . . 33
Table 9. Operating conditions at power-up / power-down . . . 34
Table 10. Embedded reset and power control block characteristics . . . 35
Table 11. Embedded internal reference voltage . . . 36
Table 12. Maximum current consumption in Run mode, code with data processing running from Flash . . . 37
Table 13. Maximum current consumption in Run mode, code with data processing running from RAM . . . 37
Table 14. Maximum current consumption in Sleep mode, code running from Flash or RAM . . . 39
Table 15. Typical and maximum current consumptions in Stop and Standby modes . . . 39
Table 16. Typical current consumption in Run mode, code with data processing running from Flash . . . 42
Table 17. Typical current consumption in Sleep mode, code running from Flash or RAM . . . 43
Table 18. Peripheral current consumption . . . 44
Table 19. High-speed external user clock characteristics . . . 45
Table 20. Low-speed external user clock characteristics . . . 45
Table 21. HSE 4-16 MHz oscillator characteristics . . . 47
Table 22. LSE oscillator characteristics (f_{LSE} = 32.768 kHz) . . . 48
Table 23. HSI oscillator characteristics . . . 49
Table 24. LSI oscillator characteristics . . . 50
Table 25. Low-power mode wakeup timings . . . 50
Table 26. PLL characteristics . . . 50
Table 27. Flash memory characteristics . . . 51
Table 28. EMS characteristics . . . 52
Table 29. EMI characteristics . . . 52
Table 30. ESD absolute maximum ratings . . . 53
Table 31. Electrical sensitivities . . . 53
Table 32. I/O current injection susceptibility . . . 54
Table 33. I/O static characteristics . . . 55
Table 34. Output voltage characteristics . . . 58
Table 35. I/O AC characteristics . . . 59
Table 36. NRST pin characteristics . . . 60
Table 37. TIMx characteristics . . . 62
Table 38. I^2C characteristics . . . 63
Table 39. SCL frequency (f_{PCLK1}= 36 MHz, V_{DD_I2C} = 3.3 V) . . . 64
Table 40. SPI characteristics . . . 65
Table 41. ADC characteristics . . . 68
Table 42. R_{AIN} max for f_{ADC} = 14 MHz . . . 69
Table 43. ADC accuracy - limited test conditions . . . 69

Table 44. ADC accuracy 70
Table 45. TS characteristics 72
Table 46. UFQFPN48 - 48-lead, 7x7 mm, 0.5 mm pitch, ultra thin fine pitch quad flat package mechanical data 74
Table 47. VFQFPN36 - 36-pin, 6x6 mm, 0.5 mm pitch very thin profile fine pitch quad flat package mechanical data 77
Table 48. LQPF100 - 100-pin, 14 x 14 mm low-profile quad flat package mechanical data 80
Table 49. LQFP64 - 64-pin, 10 x 10 mm low-profile quad flat package mechanical data 83
Table 50. LQFP48 - 48-pin, 7 x 7 mm low-profile quad flat package mechanical data 87
Table 51. Package thermal characteristics 90
Table 52. Ordering information scheme 92
Table 53. Document revision history 94

List of Figures

Figure 1. STM32F101xx medium-density access line block diagram . . . 12
Figure 2. Clock tree . . . 13
Figure 3. STM32F101xx medium-density access line LQFP100 pinout . . . 21
Figure 4. STM32F101xx medium-density access line LQFP64 pinout . . . 22
Figure 5. STM32F101xx medium-density access line LQFP48 pinout . . . 22
Figure 6. STM32F101xx medium-density access line UFQPFN48 pinout . . . 23
Figure 7. STM32F101xx medium-density access line VFQPFN36 pinout . . . 23
Figure 8. Memory map . . . 29
Figure 9. Pin loading conditions . . . 31
Figure 10. Pin input voltage . . . 31
Figure 11. Power supply scheme . . . 31
Figure 12. Current consumption measurement scheme . . . 32
Figure 13. Typical current consumption in Run mode versus frequency (at 3.6 V) - code with data processing running from RAM, peripherals enabled . . . 38
Figure 14. Typical current consumption in Run mode versus frequency (at 3.6 V) - code with data processing running from RAM, peripherals disabled . . . 38
Figure 15. Typical current consumption on V_{BAT} with RTC on versus temperature at different V_{BAT} values . . . 40
Figure 16. Typical current consumption in Stop mode with regulator in Run mode versus temperature at V_{DD} = 3.3 V and 3.6 V . . . 40
Figure 17. Typical current consumption in Stop mode with regulator in Low-power mode versus temperature at V_{DD} = 3.3 V and 3.6 V . . . 41
Figure 18. Typical current consumption in Standby mode versus temperature at V_{DD} = 3.3 V and 3.6 V . . . 41
Figure 19. High-speed external clock source AC timing diagram . . . 46
Figure 20. Low-speed external clock source AC timing diagram . . . 46
Figure 21. Typical application with an 8 MHz crystal . . . 47
Figure 22. Typical application with a 32.768 kHz crystal . . . 49
Figure 23. Standard I/O input characteristics - CMOS port . . . 56
Figure 24. Standard I/O input characteristics - TTL port . . . 56
Figure 25. 5 V tolerant I/O input characteristics - CMOS port . . . 57
Figure 26. 5 V tolerant I/O input characteristics - TTL port . . . 57
Figure 27. I/O AC characteristics definition . . . 60
Figure 28. Recommended NRST pin protection . . . 61
Figure 29. I^2C bus AC waveforms and measurement circuit(1) . . . 64
Figure 30. SPI timing diagram - slave mode and CPHA = 0 . . . 66
Figure 31. SPI timing diagram - slave mode and CPHA = 1(1) . . . 66
Figure 32. SPI timing diagram - master mode(1) . . . 67
Figure 33. ADC accuracy characteristics . . . 70
Figure 34. Typical connection diagram using the ADC . . . 71
Figure 35. Power supply and reference decoupling (V_{REF+} not connected to V_{DDA}) . . . 71
Figure 36. Power supply and reference decoupling (V_{REF+} connected to V_{DDA}) . . . 72
Figure 37. UFQFPN48 7 x 7 mm, 0.5 mm pitch, package outline . . . 73
Figure 38. UFQFPN48 recommended footprint . . . 74
Figure 39. UFQFPN48 marking example (package top view) . . . 75
Figure 40. VFQFPN36 - 36-pin, 6x6 mm, 0.5 mm pitch very thin profile fine pitch quad flat package outline . . . 76
Figure 41. VFQFPN36 - 36-pin, 6x6 mm, 0.5 mm pitch very thin profile fine pitch quad flat

package recommended footprint 78
Figure 42. VFQFPN36 marking example (package top view) 79
Figure 43. LQFP100 - 100-pin, 14 x 14 mm low-profile quad flat package outline 80
Figure 44. LQFP100 - 100-pin, 14 x 14 mm low-profile quad flat recommended footprint 81
Figure 45. LQFP100 marking example (package top view) 82
Figure 46. LQFP64 - 64-pin, 10 x 10 mm low-profile quad flat package outline 83
Figure 47. LQFP64 - 64-pin, 10 x 10 mm low-profile quad flat package recommended footprint 84
Figure 48. LQFP64 marking example (package top view) 85
Figure 49. LQFP48 - 48-pin, 7 x 7 mm low-profile quad flat package outline 86
Figure 50. LQFP48 - 48-pin, 7 x 7 mm low-profile quad flat package recommended footprint 88
Figure 51. LQFP48 marking example (package top view) 89
Figure 52. LQFP64 P_D max vs. T_A 91

1 Introduction

This datasheet provides the ordering information and mechanical device characteristics of the STM32F101x8 and STM32F101xB medium-density access line microcontrollers. For more details on the whole STMicroelectronics STM32F101xx family, please refer to *Section 2.2: Full compatibility throughout the family*.

The medium-density STM32F101xx datasheet should be read in conjunction with the low-, medium- and high-density STM32F10xxx reference manual.
For information on programming, erasing and protection of the internal Flash memory please refer to the *STM32F10xxx Flash programming manual.*
The reference and Flash programming manuals are both available from the STMicroelectronics website *www.st.com.*

For information on the Cortex® -M3 core please refer to the Cortex® -M3 Technical Reference Manual, available from the www.arm.com website.

2 Description

The STM32F101xB and STM32F101x8 medium-density access line family incorporates the high-performance ARM® Cortex® -M3 32-bit RISC core operating at a 36 MHz frequency, high-speed embedded memories (Flash memory up to 128 Kbytes and SRAM up to 16 Kbytes), and an extensive range of enhanced peripherals and I/Os connected to two APB buses. All devices offer standard communication interfaces (two I^2Cs, two SPIs, and up to three USARTs), one 12-bit ADC and three general-purpose 16-bit timers.

The STM32F101xx medium-density access line family operates in the –40 to +85 °C temperature range, from a 2.0 to 3.6 V power supply. A comprehensive set of power-saving mode allows the design of low-power applications.

The STM32F101xx medium-density access line family includes devices in four different packages ranging from 36 pins to 100 pins. Depending on the device chosen, different sets of peripherals are included, the description below gives an overview of the complete range of peripherals proposed in this family.

These features make the STM32F101xx medium-density access line microcontroller family suitable for a wide range of applications such as application control and user interface, medical and handheld equipment, PC peripherals, gaming and GPS platforms, industrial applications, PLCs, inverters, printers, scanners, alarm systems, Video intercoms, and HVACs.

2.1 Device overview

Figure 1 shows the general block diagram of the device family.

Table 2. Device features and peripheral counts (STM32F101xx medium-density access line)

Peripheral		STM32F101Tx		STM32F101Cx		STM32F101Rx		STM32F101Vx	
Flash - Kbytes		64	128	64	128	64	128	64	128
SRAM - Kbytes		10	16	10	16	10	16	10	16
Timers	**General -purpose**	3		3		3		3	
Communication	**SPI**	1		2		2		2	
	I^2C	1		2		2		2	
	USART	2		3		3		3	
12-bit synchronized ADC number of channels		110 channels		110 channels		116 channels		116 channels	
GPIOs		26		37		51		80	
CPU frequency		36 MHz							
Operating voltage		2.0 to 3.6 V							
Operating temperatures		Ambient temperature: –40 to +85 °C (see *Table 8*) Junction temperature: –40 to +105 °C (see *Table 8*)							
Packages		VFQFPN36		LQFP48, UFQFPN48		LQFP64		LQFP100	

Figure 1. STM32F101xx medium-density access line block diagram

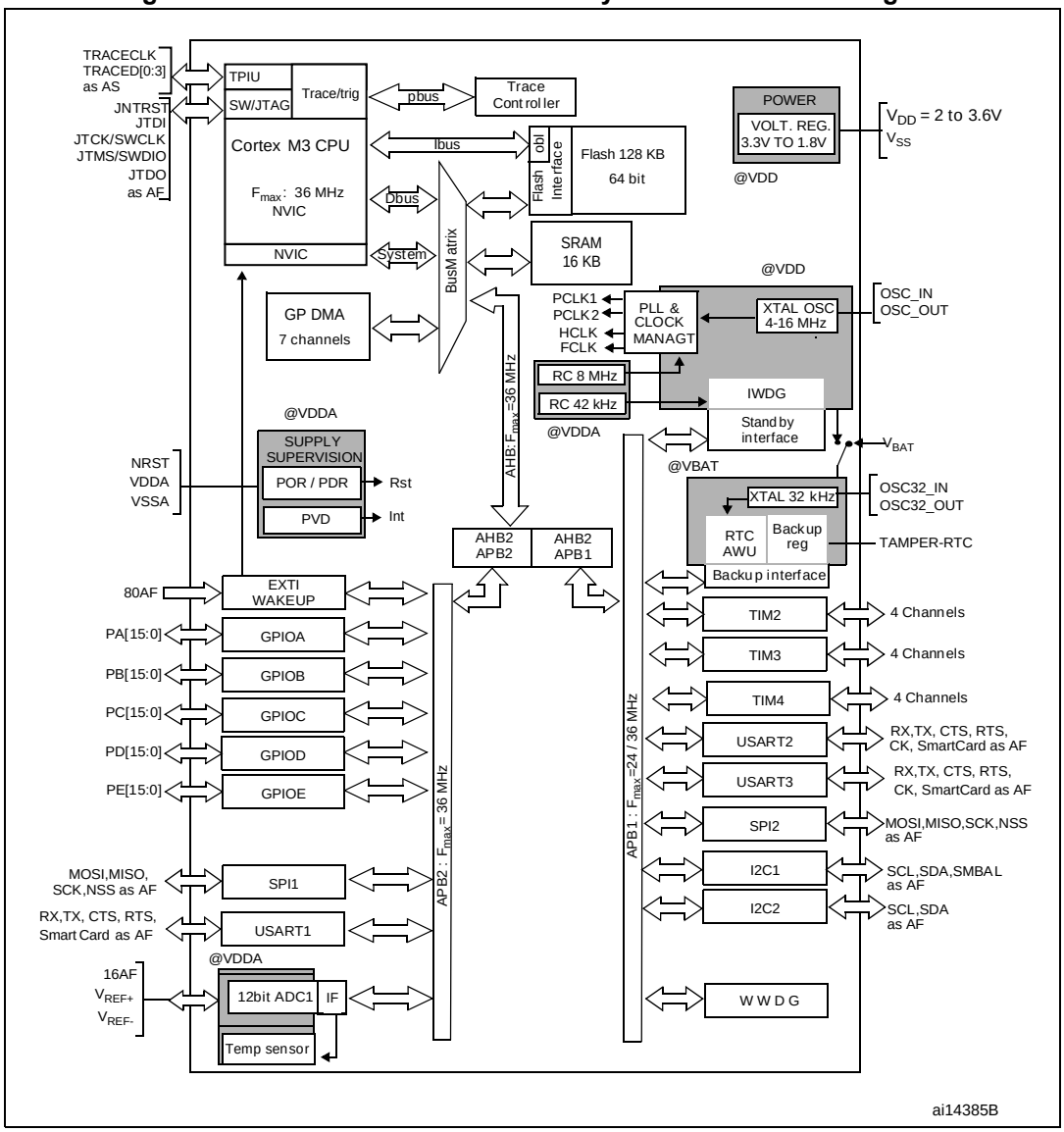

1. AF = alternate function on I/O port pin.
2. T_A = –40 °C to +85 °C (junction temperature up to 105 °C).

Figure 2. Clock tree

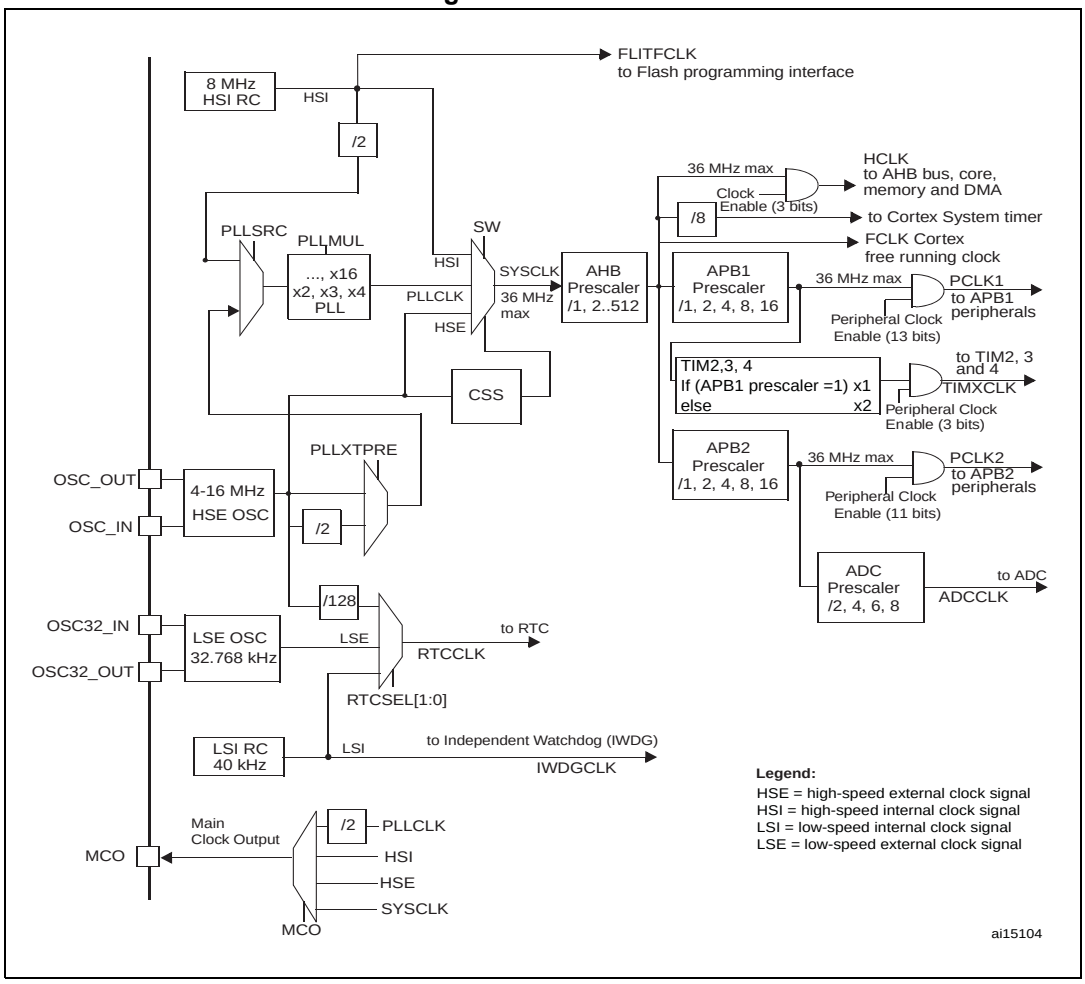

1. When the HSI is used as a PLL clock input, the maximum system clock frequency that can be achieved is 36 MHz.
2. To have an ADC conversion time of 1 µs, APB2 must be at 14 MHz or 28 MHz.

2.2 Full compatibility throughout the family

The STM32F101xx is a complete family whose members are fully pin-to-pin, software and feature compatible. In the reference manual, the STM32F101x4 and STM32F101x6 are referred to as low-density devices, the STM32F101x8 and STM32F101xB are referred to as medium-density devices, and the STM32F101xC, STM32F101xD and STM32F101xE are referred to as high-density devices.

Low- and high-density devices are an extension of the STM32F101x8/B devices, they are specified in the STM32F101x4/6 and STM32F101xC/D/E datasheets, respectively. Low-density devices feature lower Flash memory and RAM capacities and a timer less. High-density devices have higher Flash memory and RAM capacities, and additional peripherals like FSMC and DAC, while remaining fully compatible with the other members of the STM32F101xx family.
The STM32F101x4, STM32F101x6, STM32F101xC, STM32F101xD and STM32F101xE are a drop-in replacement for the STM32F101x8/B medium-density devices, allowing the user to try different memory densities and providing a greater degree of freedom during the development cycle.

Moreover, the STM32F101xx performance line family is fully compatible with all existing STM32F101xx access line and STM32F102xx USB access line devices.

Table 3. STM32F101xx family

<table>
<tr><th rowspan="3">Pinout</th><th colspan="7">Memory size</th></tr>
<tr><th colspan="2">Low-density devices</th><th colspan="2">Medium-density devices</th><th colspan="3">High-density devices</th></tr>
<tr><th>16 KB Flash</th><th>32 KB Flash(1)</th><th>64 KB Flash</th><th>128 KB Flash</th><th>256 KB Flash</th><th>384 KB Flash</th><th>512 KB Flash</th></tr>
<tr><th></th><th>4 KB RAM</th><th>6 KB RAM</th><th>10 KB RAM</th><th>16 KB RAM</th><th>32 KB RAM</th><th>48 KB RAM</th><th>48 KB RAM</th></tr>
<tr><td>144</td><td>-</td><td>-</td><td>-</td><td>-</td><td colspan="3" rowspan="2">5 × USARTs
4 × 16-bit timers, 2 × basic timers
3 × SPIs, 2 × I^{2}Cs, 1 × ADC,
2 × DACs, FSMC (100 and 144 pins)</td></tr>
<tr><td>100</td><td>-</td><td>-</td><td colspan="3" rowspan="3">3 × USARTs
3 × 16-bit timers
2 × SPIs, 2 × I2Cs,
1 × ADC</td></tr>
<tr><td>64</td><td colspan="2" rowspan="3">2 × USARTs
2 × 16-bit timers
1 × SPI, 1 × I^{2}C
1 × ADC</td><td colspan="3">-</td></tr>
<tr><td>48</td><td>-</td><td>-</td><td>-</td></tr>
<tr><td>36</td><td>-</td><td>-</td><td>-</td></tr>
</table>

1. For orderable part numbers that do not show the A internal code after the temperature range code (6), the reference datasheet for electrical characteristics is that of the STM32F101x8/B medium-density devices.

2.3 Overview

2.3.1 ARM® Cortex® -M3 core with embedded Flash and SRAM

The ARM® Cortex® -M3 processor is the latest generation of ARM processors for embedded systems. It has been developed to provide a low-cost platform that meets the needs of MCU implementation, with a reduced pin count and low-power consumption, while delivering outstanding computational performance and an advanced system response to interrupts.

The ARM® Cortex® -M3 32-bit RISC processor features exceptional code-efficiency, delivering the high-performance expected from an ARM core in the memory size usually associated with 8- and 16-bit devices.

The STM32F101xx medium-density access line family having an embedded ARM core, is therefore compatible with all ARM tools and software.

2.3.2 Embedded Flash memory

64 or 128 Kbytes of embedded Flash is available for storing programs and data.

2.3.3 CRC (cyclic redundancy check) calculation unit

The CRC (cyclic redundancy check) calculation unit is used to get a CRC code from a 32-bit data word and a fixed generator polynomial.

Among other applications, CRC-based techniques are used to verify data transmission or storage integrity. In the scope of the EN/IEC 60335-1 standard, they offer a means of verifying the Flash memory integrity. The CRC calculation unit helps compute a signature of the software during runtime, to be compared with a reference signature generated at link-time and stored at a given memory location.

2.3.4 Embedded SRAM

Up to 16 Kbytes of embedded SRAM accessed (read/write) at CPU clock speed with 0 wait states.

2.3.5 Nested vectored interrupt controller (NVIC)

The STM32F101xx medium-density access line embeds a nested vectored interrupt controller able to handle up to 43 maskable interrupt channels (not including the 16 interrupt lines of Cortex® -M3) and 16 priority levels.

- Closely coupled NVIC gives low latency interrupt processing
- Interrupt entry vector table address passed directly to the core
- Closely coupled NVIC core interface
- Allows early processing of interrupts
- Processing of *late arriving* higher priority interrupts
- Support for tail-chaining
- Processor state automatically saved
- Interrupt entry restored on interrupt exit with no instruction overhead

This hardware block provides flexible interrupt management features with minimal interrupt latency.

2.3.6 External interrupt/event controller (EXTI)

The external interrupt/event controller consists of 19 edge detector lines used to generate interrupt/event requests. Each line can be independently configured to select the trigger event (rising edge, falling edge, both) and can be masked independently. A pending register maintains the status of the interrupt requests. The EXTI can detect an external line with a pulse width shorter than the Internal APB2 clock period. Up to 80 GPIOs can be connected to the 16 external interrupt lines.

2.3.7 Clocks and startup

System clock selection is performed on startup, however the internal RC 8 MHz oscillator is selected as default CPU clock on reset. An external 4-16 MHz clock can be selected, in which case it is monitored for failure. If failure is detected, the system automatically switches back to the internal RC oscillator. A software interrupt is generated if enabled. Similarly, full interrupt management of the PLL clock entry is available when necessary (for example on failure of an indirectly used external crystal, resonator or oscillator).

Several prescalers allow the configuration of the AHB frequency, the high-speed APB (APB2) and the low-speed APB (APB1) domains. The maximum frequency of the AHB and the APB domains is 36 MHz. See *Figure 2* for details on the clock tree.

2.3.8 Boot modes

At startup, boot pins are used to select one of three boot options:

- Boot from User Flash
- Boot from System Memory
- Boot from embedded SRAM

The boot loader is located in System Memory. It is used to reprogram the Flash memory by using USART1. For further details please refer to AN2606.

2.3.9 Power supply schemes

- V_{DD} = 2.0 to 3.6 V: External power supply for I/Os and the internal regulator. Provided externally through V_{DD} pins.
- V_{SSA}, V_{DDA} = 2.0 to 3.6 V: External analog power supplies for ADC, Reset blocks, RCs and PLL (minimum voltage to be applied to V_{DDA} is 2.4 V when the ADC is used). V_{DDA} and V_{SSA} must be connected to V_{DD} and V_{SS}, respectively.
- V_{BAT} = 1.8 to 3.6 V: Power supply for RTC, external clock 32 kHz oscillator and backup registers (through power switch) when V_{DD} is not present.

For more details on how to connect power pins, refer to *Figure 11: Power supply scheme*.

2.3.10 Power supply supervisor

The device has an integrated power on reset (POR)/power down reset (PDR) circuitry. It is always active, and ensures proper operation starting from/down to 2 V. The device remains in reset mode when V_{DD} is below a specified threshold, $V_{POR/PDR}$, without the need for an external reset circuit.

The device features an embedded programmable voltage detector (PVD) that monitors the V_{DD}/V_{DDA} power supply and compares it to the V_{PVD} threshold. An interrupt can be generated when V_{DD}/V_{DDA} drops below the V_{PVD} threshold and/or when V_{DD}/V_{DDA} is higher than the V_{PVD} threshold. The interrupt service routine can then generate a warning message and/or put the MCU into a safe state. The PVD is enabled by software.

Refer to *Table 10: Embedded reset and power control block characteristics* for the values of $V_{POR/PDR}$ and V_{PVD}.

2.3.11 Voltage regulator

The regulator has three operation modes: main (MR), low power (LPR) and power down.

- MR is used in the nominal regulation mode (Run)
- LPR is used in the Stop mode
- Power down is used in Standby mode: the regulator output is in high impedance: the kernel circuitry is powered down, inducing zero consumption (but the contents of the registers and SRAM are lost)

This regulator is always enabled after reset. It is disabled in Standby mode, providing high impedance output.

2.3.12 Low-power modes

The STM32F101xx medium-density access line supports three low-power modes to achieve the best compromise between low power consumption, short startup time and available wakeup sources:

- **Sleep** mode

  In Sleep mode, only the CPU is stopped. All peripherals continue to operate and can wake up the CPU when an interrupt/event occurs.
- **Stop** mode

  Stop mode achieves the lowest power consumption while retaining the content of SRAM and registers. All clocks in the 1.8 V domain are stopped, the PLL, the HSI RC and the HSE crystal oscillators are disabled. The voltage regulator can also be put either in normal or in low power mode.
  The device can be woken up from Stop mode by any of the EXTI line. The EXTI line source can be one of the 16 external lines, the PVD output or the RTC alarm.
- **Standby** mode

  The Standby mode is used to achieve the lowest power consumption. The internal voltage regulator is switched off so that the entire 1.8 V domain is powered off. The PLL, the HSI RC and the HSE crystal oscillators are also switched off. After entering Standby mode, SRAM and register contents are lost except for registers in the Backup domain and Standby circuitry.

  The device exits Standby mode when an external reset (NRST pin), a IWDG reset, a rising edge on the WKUP pin, or an RTC alarm occurs.

Note: The RTC, the IWDG, and the corresponding clock sources are not stopped by entering Stop or Standby mode.

2.3.13 DMA

The flexible 7-channel general-purpose DMA is able to manage memory-to-memory, peripheral-to-memory and memory-to-peripheral transfers. The DMA controller supports circular buffer management avoiding the generation of interrupts when the controller reaches the end of the buffer.

Each channel is connected to dedicated hardware DMA requests, with support for software trigger on each channel. Configuration is made by software and transfer sizes between source and destination are independent.

The DMA can be used with the main peripherals: SPI, I^2C, USART, general purpose timers TIMx and ADC.

2.3.14 RTC (real-time clock) and backup registers

The RTC and the backup registers are supplied through a switch that takes power either on V_{DD} supply when present or through the V_{BAT} pin. The backup registers are ten 16-bit registers used to store 20 bytes of user application data when V_{DD} power is not present.

The real-time clock provides a set of continuously running counters which can be used with suitable software to provide a clock calendar function, and provides an alarm interrupt and a periodic interrupt. It is clocked by a 32.768 kHz external crystal, resonator or oscillator, the internal low power RC oscillator or the high-speed external clock divided by 128. The internal low power RC has a typical frequency of 40 kHz. The RTC can be calibrated using an external 512 Hz output to compensate for any natural crystal deviation. The RTC features a 32-bit programmable counter for long term measurement using the Compare register to generate an alarm. A 20-bit prescaler is used for the time base clock and is by default configured to generate a time base of 1 second from a clock at 32.768 kHz.

2.3.15 Independent watchdog

The independent watchdog is based on a 12-bit downcounter and 8-bit prescaler. It is clocked from an independent 40 kHz internal RC and as it operates independently from the main clock, it can operate in Stop and Standby modes. It can be used as a watchdog to reset the device when a problem occurs, or as a free running timer for application timeout management. It is hardware or software configurable through the option bytes. The counter can be frozen in debug mode.

2.3.16 Window watchdog

The window watchdog is based on a 7-bit downcounter that can be set as free running. It can be used as a watchdog to reset the device when a problem occurs. It is clocked from the main clock. It has an early warning interrupt capability and the counter can be frozen in debug mode.

2.3.17 SysTick timer

This timer is dedicated for OS, but could also be used as a standard down counter. It features:

- A 24-bit down counter
- Autoreload capability
- Maskable system interrupt generation when the counter reaches 0.
- Programmable clock source

2.3.18 General-purpose timers (TIMx)

There are three synchronizable general-purpose timers embedded in the STM32F101xx medium-density access line devices. These timers are based on a 16-bit auto-reload up/down counter, a 16-bit prescaler and feature 4 independent channels each for input capture, output compare, PWM or one pulse mode output. This gives up to 12 input captures / output compares / PWMs on the largest packages.
The general-purpose timers can work together via the Timer Link feature for synchronization or event chaining. Their counter can be frozen in debug mode. Any of the general-purpose timers can be used to generate PWM outputs. They all have independent DMA request generation.

These timers are capable of handling quadrature (incremental) encoder signals and the digital outputs from 1 to 3 hall-effect sensors.

2.3.19 I^2C bus

Up to two I²C bus interfaces can operate in multimaster and slave modes. They can support standard and fast modes.

They support dual slave addressing (7-bit only) and both 7/10-bit addressing in master mode. A hardware CRC generation/verification is embedded.
They can be served by DMA and they support SM Bus 2.0/PM Bus.

2.3.20 Universal synchronous/asynchronous receiver transmitter (USART)

The available USART interfaces communicate at up to 2.25 Mbit/s. They provide hardware management of the CTS and RTS signals, support IrDA SIR ENDEC, are ISO 7816 compliant and have LIN Master/Slave capability.

The USART interfaces can be served by the DMA controller.

2.3.21 Serial peripheral interface (SPI)

Up to two SPIs are able to communicate up to 18 Mbit/s in slave and master modes in full-duplex and simplex communication modes. The 3-bit prescaler gives 8 master mode frequencies and the frame is configurable to 8 bits or 16 bits. The hardware CRC generation/verification supports basic SD Card/MMC modes.

Both SPIs can be served by the DMA controller.

2.3.22 GPIOs (general-purpose inputs/outputs)

Each of the GPIO pins can be configured by software as output (push-pull or open-drain), as input (with or without pull-up or pull-down) or as peripheral alternate function. Most of the

GPIO pins are shared with digital or analog alternate functions. All GPIOs are high current-capable.

The I/Os alternate function configuration can be locked if needed following a specific sequence in order to avoid spurious writing to the I/Os registers.

2.3.23 ADC (analog to digital converter)

The 12-bit analog to digital converter has up to 16 external channels and performs conversions in single-shot or scan modes. In scan mode, automatic conversion is performed on a selected group of analog inputs.

The ADC can be served by the DMA controller.

An analog watchdog feature allows very precise monitoring of the converted voltage of one, some or all selected channels. An interrupt is generated when the converted voltage is outside the programmed thresholds.

2.3.24 Temperature sensor

The temperature sensor has to generate a voltage that varies linearly with temperature. The conversion range is between 2 V < V_{DDA} < 3.6 V. The temperature sensor is internally connected to the ADC_IN16 input channel which is used to convert the sensor output voltage into a digital value.

2.3.25 Serial wire JTAG debug port (SWJ-DP)

The ARM SWJ-DP Interface is embedded, and is a combined JTAG and serial wire debug port that enables either a serial wire debug or a JTAG probe to be connected to the target. The JTAG TMS and TCK pins are shared respectively with SWDIO and SWCLK and a specific sequence on the TMS pin is used to switch between JTAG-DP and SW-DP.

3 Pinouts and pin description

Figure 3. STM32F101xx medium-density access line LQFP100 pinout

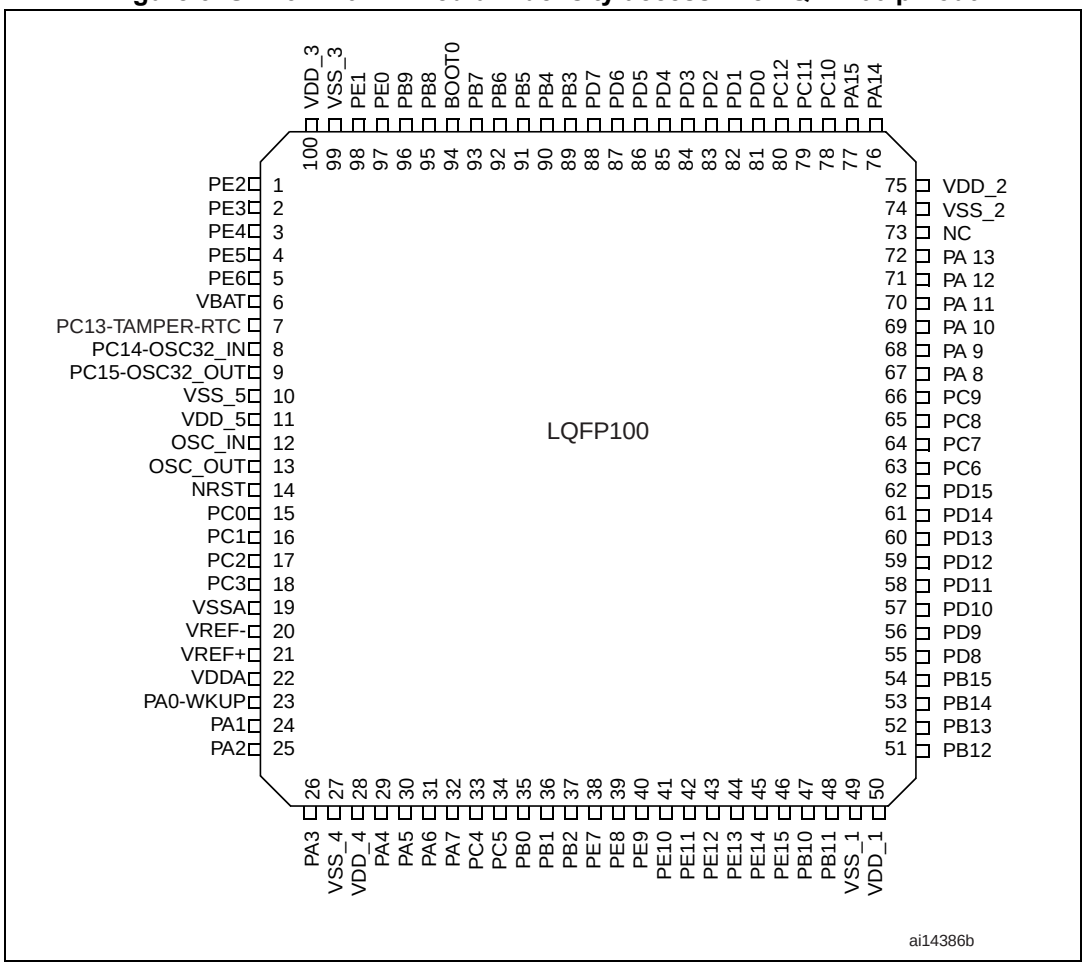

Figure 4. STM32F101xx medium-density access line LQFP64 pinout

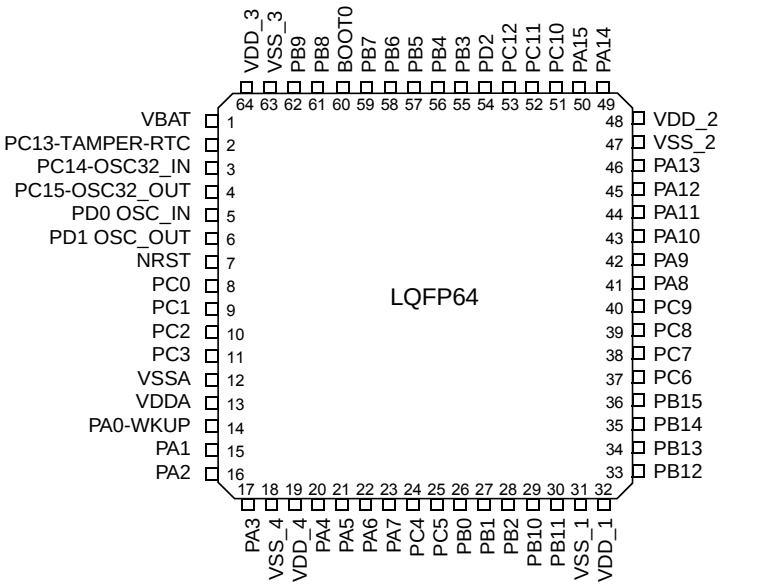

Figure 5. STM32F101xx medium-density access line LQFP48 pinout

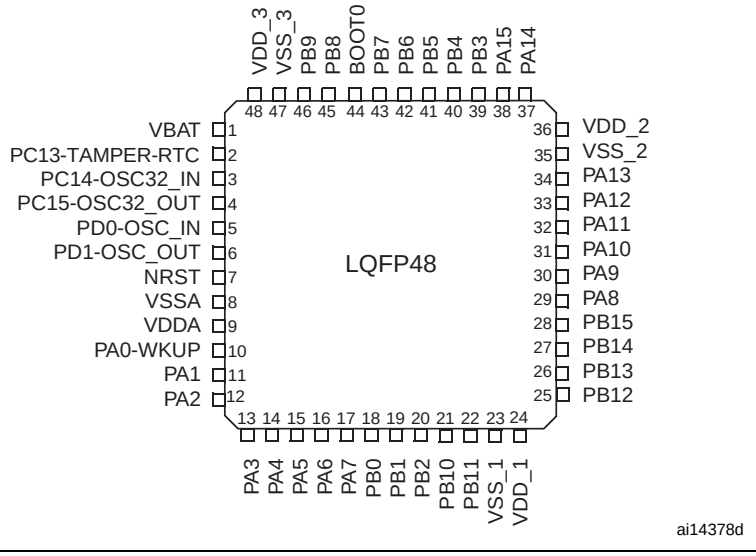

Figure 6. STM32F101xx medium-density access line UFQPFN48 pinout

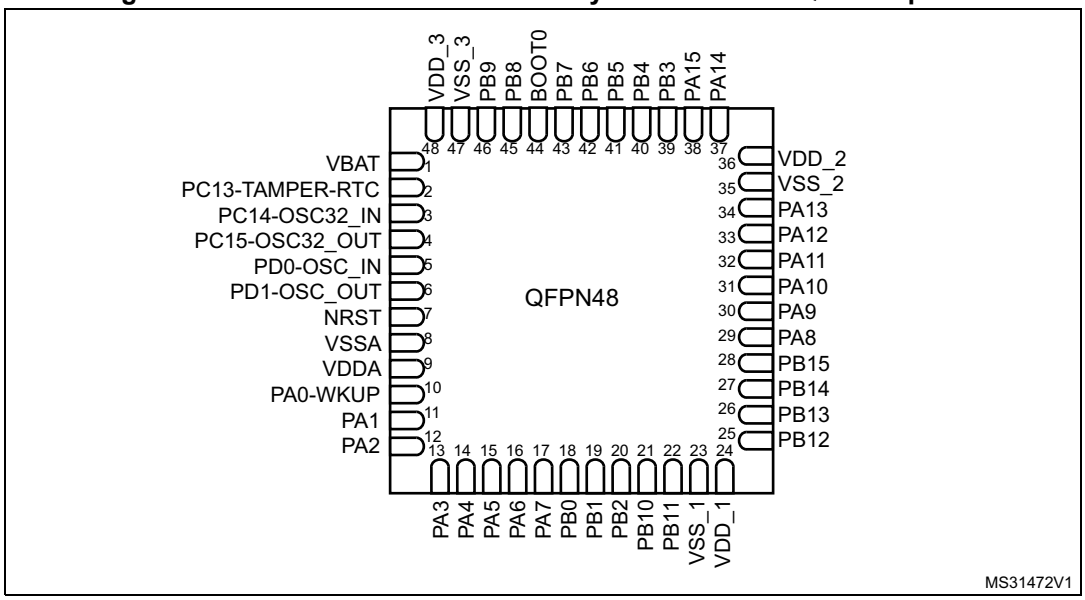

Figure 7. STM32F101xx medium-density access line VFQPFN36 pinout

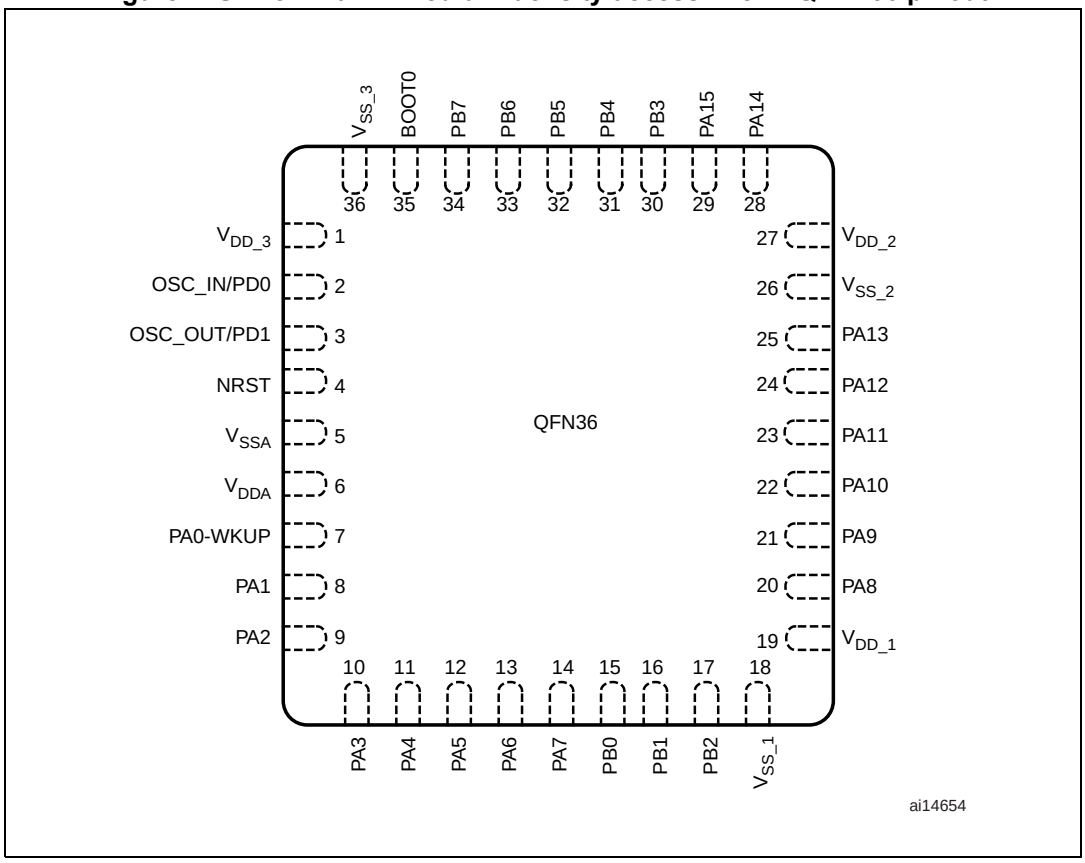

Table 4. Medium-density STM32F101xx pin definitions

Pins				Pin name	Type[1]	I / O level[2]	Main function[3] (after reset)	Alternate functions[3][4]	
LQFP48/ UFQFPN48	LQFP64	LQFP100	VFQFPN36					Default	Remap
-	-	1	-	PE2	I/O	FT	PE2	TRACECLK	-
-	-	2	-	PE3	I/O	FT	PE3	TRACED0	-
-	-	3	-	PE4	I/O	FT	PE4	TRACED1	-
-	-	4	-	PE5	I/O	FT	PE5	TRACED2	-
-	-	5	-	PE6	I/O	FT	PE6	TRACED3	-
1	1	6	-	V_{BAT}	S	-	V_{BAT}	-	-
2	2	7	-	PC13-TAMPER-RTC[5]	I/O	-	PC13[6]	TAMPER-RTC	-
3	3	8	-	PC14-OSC32_IN[5]	I/O	-	PC14[6]	OSC32_IN	-
4	4	9	-	PC15-OSC32_OUT[5]	I/O	-	PC15[6]	OSC32_OUT	-
-	-	10	-	V_{SS_5}	S	-	V_{SS_5}	-	-
-	-	11	-	V_{DD_5}	S	-	V_{DD_5}	-	-
5	5	12	2	OSC_IN	I	-	OSC_IN	-	PD0[7]
6	6	13	3	OSC_OUT	O	-	OSC_OUT	-	PD1[7]
7	7	14	4	NRST	I/O	-	NRST	-	-
-	8	15	-	PC0	I/O	-	PC0	ADC_IN10	-
-	9	16	-	PC1	I/O	-	PC1	ADC_IN11	-
-	10	17	-	PC2	I/O	-	PC2	ADC_IN12	-
-	11	18	-	PC3	I/O	-	PC3	ADC_IN13	-
8	12	19	5	V_{SSA}	S	-	V_{SSA}	-	-
-	-	20	-	V_{REF-}	S	-	V_{REF-}	-	-
-	-	21	-	V_{REF+}	S	-	V_{REF+}	-	-
9	13	22	6	V_{DDA}	S	-	V_{DDA}	-	-
10	14	23	7	PA0-WKUP	I/O	-	PA0	WKUP/USART2_CTS[8]/ ADC_IN0/ TIM2_CH1_ETR[8]	-
11	15	24	8	PA1	I/O	-	PA1	USART2_RTS[8]/ ADC_IN1/TIM2_CH2[8]	-

Table 4. Medium-density STM32F101xx pin definitions (continued)

Pins				Pin name	Type(1)	I / O level(2)	Main function(3) (after reset)	Alternate functions(3)(4)	
LQFP48/ UFQFPN48	LQFP64	LQFP100	VFQFPN36					Default	Remap
12	16	25	9	PA2	I/O	-	PA2	USART2_TX(8)/ ADC_IN2/TIM2_CH3(8)	-
13	17	26	10	PA3	I/O	-	PA3	USART2_RX(8)/ ADC_IN3/TIM2_CH4(8)	-
-	18	27	-	V_{SS_4}	S	-	V_{SS_4}	-	-
-	19	28	-	V_{DD_4}	S	-	V_{DD_4}	-	-
14	20	29	11	PA4	I/O	-	PA4	SPI1_NSS(8)/ADC_IN4 USART2_CK(8)/	-
15	21	30	12	PA5	I/O	-	PA5	SPI1_SCK(8)/ADC_IN5	-
16	22	31	13	PA6	I/O	-	PA6	SPI1_MISO(8)/ADC_IN6 TIM3_CH1(8)	-
17	23	32	14	PA7	I/O	-	PA7	SPI1_MOSI(8)/ADC_IN7 TIM3_CH2(8)	-
-	24	33	-	PC4	I/O	-	PC4	ADC_IN14	-
-	25	34	-	PC5	I/O	-	PC5	ADC_IN15	-
18	26	35	15	PB0	I/O	-	PB0	ADC_IN8/TIM3_CH3(8)	-
19	27	36	16	PB1	I/O	-	PB1	ADC_IN9/TIM3_CH4(8)	-
20	28	37	17	PB2	I/O	FT	PB2/BOOT1	-	-
-	-	38	-	PE7	I/O	FT	PE7	-	-
-	-	39	-	PE8	I/O	FT	PE8	-	-
-	-	40	-	PE9	I/O	FT	PE9	-	-
-	-	41	-	PE10	I/O	FT	PE10	-	-
-	-	42	-	PE11	I/O	FT	PE11	-	-
-	-	43	-	PE12	I/O	FT	PE12	-	-
-	-	44	-	PE13	I/O	FT	PE13	-	-
-	-	45	-	PE14	I/O	FT	PE14	-	-
-	-	46	-	PE15	I/O	FT	PE15	-	-
21	29	47	-	PB10	I/O	FT	PB10	I2C2_SCL/ USART3_TX (8)	TIM2_CH3
22	30	48	-	PB11	I/O	FT	PB11	I2C2_SDA/ USART3_RX (8)	TIM2_CH4

Table 4. Medium-density STM32F101xx pin definitions (continued)

Pins				Pin name	Type(1)	I / O level(2)	Main function(3) (after reset)	Alternate functions(3)(4)	
LQFP48/ UFQFPN48	LQFP64	LQFP100	VFQFPN36					Default	Remap
23	31	49	18	V_{SS_1}	S	-	V_{SS_1}	-	-
24	32	50	19	V_{DD_1}	S	-	V_{DD_1}	-	-
25	33	51	-	PB12	I/O	FT	PB12	SPI2_NSS / I2C2_SMBA / USART3_CK (8)	-
26	34	52	-	PB13	I/O	FT	PB13	SPI2_SCK/ USART3_CTS(8)	-
27	35	53	-	PB14	I/O	FT	PB14	SPI2_MISO/ USART3_RTS(8)	-
28	36	54	-	PB15	I/O	FT	PB15	SPI2_MOSI	-
-	-	55	-	PD8	I/O	FT	PD8	-	USART3_TX
-	-	56	-	PD9	I/O	FT	PD9	-	USART3_RX
-	-	57	-	PD10	I/O	FT	PD10	-	USART3_CK
-	-	58	-	PD11	I/O	FT	PD11	-	USART3_CTS
-	-	59	-	PD12	I/O	FT	PD12	-	TIM4_CH1 / USART3_RTS
-	-	60	-	PD13	I/O	FT	PD13	-	TIM4_CH2
-	-	61	-	PD14	I/O	FT	PD14	-	TIM4_CH3
-	-	62	-	PD15	I/O	FT	PD15	-	TIM4_CH4
-	37	63	-	PC6	I/O	FT	PC6	-	TIM3_CH1
-	38	64	-	PC7	I/O	FT	PC7	-	TIM3_CH2
-	39	65	-	PC8	I/O	FT	PC8	-	TIM3_CH3
-	40	66	-	PC9	I/O	FT	PC9	-	TIM3_CH4
29	41	67	20	PA8	I/O	FT	PA8	USART1_CK/MCO	-
30	42	68	21	PA9	I/O	FT	PA9	USART1_TX(8)	-
31	43	69	22	PA10	I/O	FT	PA10	USART1_RX(8)	-
32	44	70	23	PA11	I/O	FT	PA11	USART1_CTS	-
33	45	71	24	PA12	I/O	FT	PA12	USART1_RTS	-
34	46	72	25	PA13	I/O	FT	JTMS-SWDIO	-	PA13
-	-	73	-	Not connected					-

Table 4. Medium-density STM32F101xx pin definitions (continued)

Pins				Pin name	Type(1)	I / O level(2)	Main function(3) (after reset)	Alternate functions(3)(4)	
LQFP48/ UFQFPN48	LQFP64	LQFP100	VFQFPN36					Default	Remap
35	47	74	26	V_{SS_2}	S	-	V_{SS_2}	-	-
36	48	75	27	V_{DD_2}	S	-	V_{DD_2}	-	-
37	49	76	28	PA14	I/O	FT	JTCK/SWCLK	-	PA14
38	50	77	29	PA15	I/O	FT	JTDI	-	TIM2_CH1_ETR / PA15/ SPI1_NSS
-	51	78	-	PC10	I/O	FT	PC10	-	USART3_TX
-	52	79	-	PC11	I/O	FT	PC11	-	USART3_RX
-	53	80	-	PC12	I/O	FT	PC12	-	USART3_CK
-	-	81	2	PD0	I/O	FT	PD0	-	-
-	-	82	3	PD1	I/O	FT	PD1	-	-
-	54	83	-	PD2	I/O	FT	PD2	TIM3_ETR	-
-	-	84	-	PD3	I/O	FT	PD3	-	USART2_CTS
-	-	85	-	PD4	I/O	FT	PD4	-	USART2_RTS
-	-	86	-	PD5	I/O	FT	PD5	-	USART2_TX
-	-	87	-	PD6	I/O	FT	PD6	-	USART2_RX
-	-	88	-	PD7	I/O	FT	PD7	-	USART2_CK
39	55	89	30	PB3	I/O	FT	JTDO		TIM2_CH2 / PB3 TRACESWO SPI1_SCK
40	56	90	31	PB4	I/O	FT	JNTRST	-	PB4 / TIM3_CH1 SPI1_MISO
41	57	91	32	PB5	I/O	-	PB5	I2C1_SMBAI	TIM3_CH2 / SPI1_MOSI
42	58	92	33	PB6	I/O	FT	PB6	I2C1_SCL(8)/ TIM4_CH1 (8)	USART1_TX
43	59	93	34	PB7	I/O	FT	PB7	I2C1_SDA(8)/ TIM4_CH2 (8)	USART1_RX
44	60	94	35	BOOT0	I	-	BOOT0	-	-
45	61	95	-	PB8	I/O	FT	PB8	TIM4_CH3 (8)	I2C1_SCL

Table 4. Medium-density STM32F101xx pin definitions (continued)

Pins				Pin name	Type(1)	I / O level(2)	Main function(3) (after reset)	Alternate functions(3)(4)	
LQFP48/ UFQFPN48	LQFP64	LQFP100	VFQFPN36					Default	Remap
46	62	96	-	PB9	I/O	FT	PB9	TIM4_CH4 (8)	I2C1_SDA
-	-	97	-	PE0	I/O	FT	PE0	TIM4_ETR	-
-	-	98	-	PE1	I/O	FT	PE1	-	-
47	63	99	36	V_{SS_3}	S	-	V_{SS_3}	-	-
48	64	100	1	V_{DD_3}	S	-	V_{DD_3}	-	-

1. I = input, O = output, S = supply, HiZ= high impedance.
2. FT= 5 V tolerant.
3. Function availability depends on the chosen device. For devices having reduced peripheral counts, it is always the lower number of peripherals that is included. For example, if a device has only one SPI, two USARTs and two timers, they will be called SPI1, USART1 & USART2 and TIM2 & TIM 3, respectively. Refer to *Table 2 on page 11*.
4. If several peripherals share the same I/O pin, to avoid conflict between these alternate functions only one peripheral should be enabled at a time through the peripheral clock enable bit (in the corresponding RCC peripheral clock enable register).
5. PC13, PC14 and PC15 are supplied through the power switch. Since the switch only sinks a limited amount of current (3 mA), the use of GPIOs PC13 to PC15 in output mode is limited: the speed should not exceed 2 MHz with a maximum load of 30 pF and these IOs must not be used as a current source (e.g. to drive an LED).
6. Main function after the first backup domain power-up. Later on, it depends on the contents of the Backup registers even after reset (because these registers are not reset by the main reset). For details on how to manage these IOs, refer to the Battery backup domain and BKP register description sections in the STM32F10xxx reference manual, available from the STMicroelectronics website: *www.st.com*.
7. The pins number 2 and 3 in the VFQFPN36 package, and 5 and 6 in the LQFP48, UFQFPN48 and LQFP64 packages are configured as OSC_IN/OSC_OUT after reset, however the functionality of PD0 and PD1 can be remapped by software on these pins. For the LQFP100 package, PD0 and PD1 are available by default, so there is no need for remapping. For more details, refer to the Alternate function I/O and debug configuration section in the STM32F10xxx reference manual.
The use of PD0 and PD1 in output mode is limited as they can only be used at 50 MHz in output mode.
8. This alternate function can be remapped by software to some other port pins (if available on the used package). For more details, refer to the Alternate function I/O and debug configuration section in the STM32F10xxx reference manual, available from the STMicroelectronics website: *www.st.com*.

4 Memory mapping

The memory map is shown in *Figure 8*.

Figure 8. Memory map

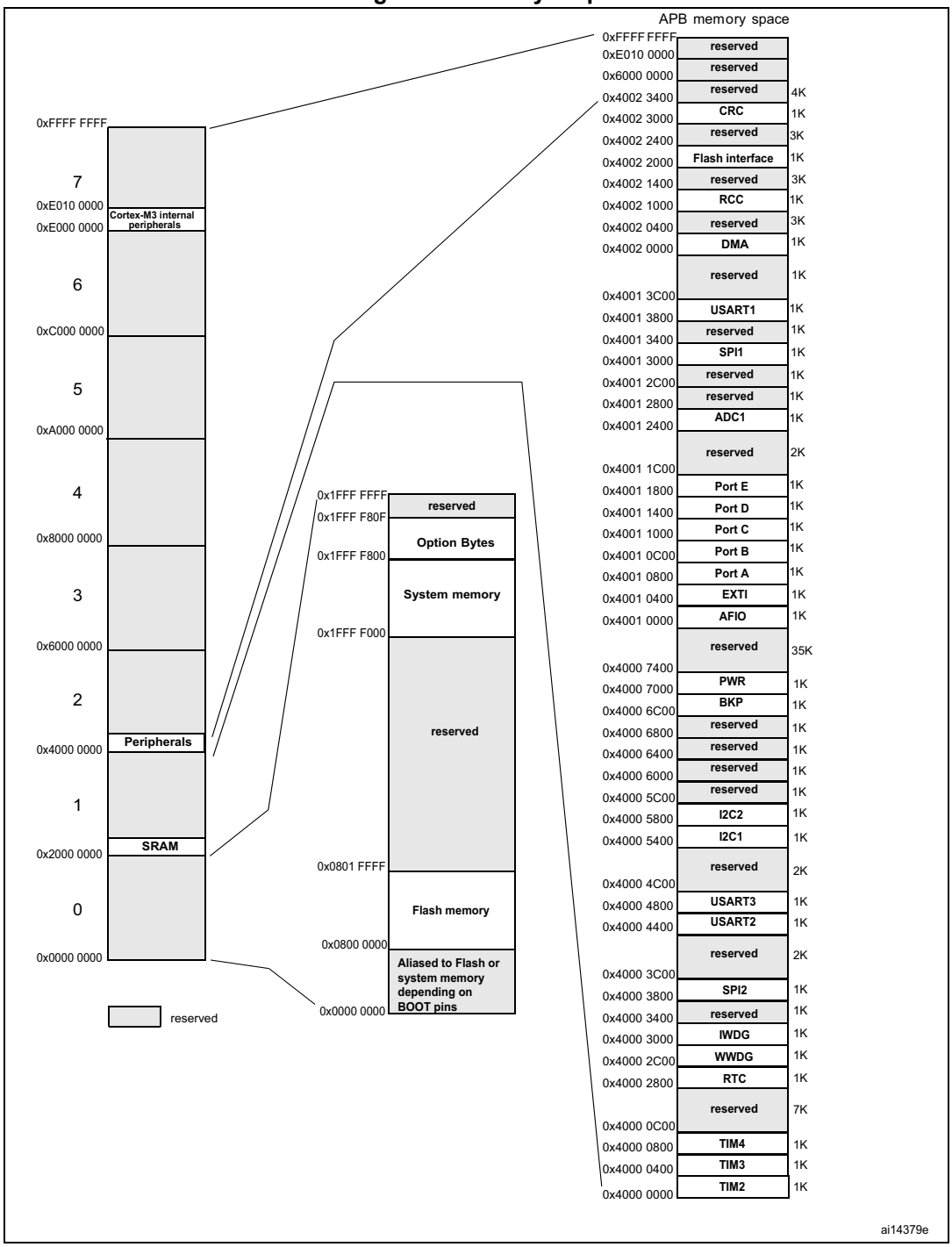

5 Electrical characteristics

5.1 Parameter conditions

Unless otherwise specified, all voltages are referenced to V_{SS}.

5.1.1 Minimum and maximum values

Unless otherwise specified the minimum and maximum values are guaranteed in the worst conditions of ambient temperature, supply voltage and frequencies by tests in production on 100% of the devices with an ambient temperature at T_A = 25 °C and T_A = $T_A$max (given by the selected temperature range).

Data based on characterization results, design simulation and/or technology characteristics are indicated in the table footnotes and are not tested in production. Based on characterization, the minimum and maximum values refer to sample tests and represent the mean value plus or minus three times the standard deviation (mean±3σ).

5.1.2 Typical values

Unless otherwise specified, typical data are based on T_A = 25 °C, V_{DD} = 3.3 V (for the 2 V ≤ V_{DD} ≤ 3.6 V voltage range). They are given only as design guidelines and are not tested.

Typical ADC accuracy values are determined by characterization of a batch of samples from a standard diffusion lot over the full temperature range, where 95% of the devices have an error less than or equal to the value indicated (mean±2σ).

5.1.3 Typical curves

Unless otherwise specified, all typical curves are given only as design guidelines and are not tested.

5.1.4 Loading capacitor

The loading conditions used for pin parameter measurement are shown in *Figure 9*.

5.1.5 Pin input voltage

The input voltage measurement on a pin of the device is described in *Figure 10*.

Figure 9. Pin loading conditions	Figure 10. Pin input voltage
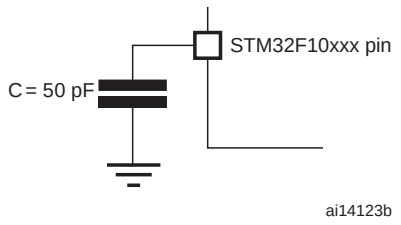	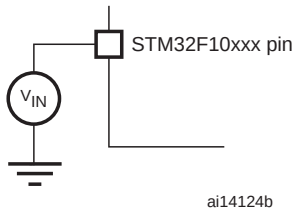

5.1.6 Power supply scheme

Figure 11. Power supply scheme

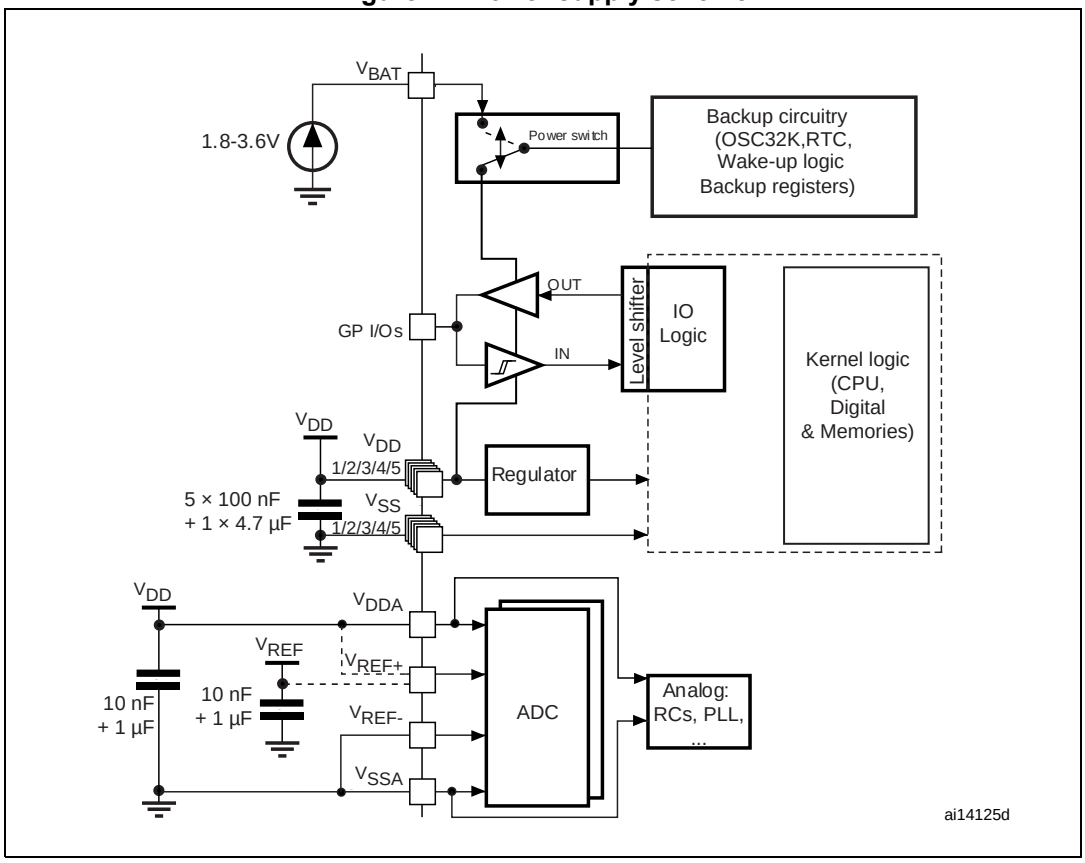

Caution: In *Figure 11*, the 4.7 µF capacitor must be connected to V_{DD3}.

5.1.7 Current consumption measurement

Figure 12. Current consumption measurement scheme

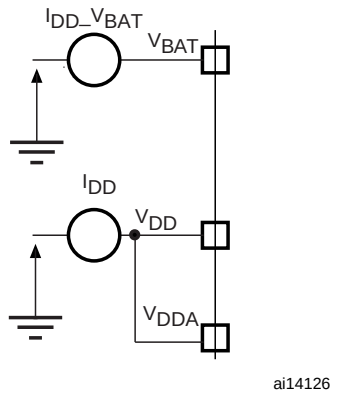

5.2 Absolute maximum ratings

Stresses above the absolute maximum ratings listed in *Table 5: Voltage characteristics*, *Table 6: Current characteristics*, and *Table 7: Thermal characteristics* may cause permanent damage to the device. These are stress ratings only and functional operation of the device at these conditions is not implied. Exposure to maximum rating conditions for extended periods may affect device reliability.

Table 5. Voltage characteristics

Symbol	Ratings	Min	Max	Unit
$V_{DD} - V_{SS}$	External main supply voltage (including V_{DDA} and V_{DD})(1)	–0.3	4.0	V
V_{IN}(2)	Input voltage on five volt tolerant pin	$V_{SS} - 0.3$	$V_{DD} + 4.0$	
	Input voltage on any other pin	$V_{SS} - 0.3$	4.0	
$\|\Delta V_{DDx}\|$	Variations between different V_{DD} power pins	-	50	mV
$\|V_{SSX} - V_{SS}\|$	Variations between all the different ground pins	-	50	
$V_{ESD(HBM)}$	Electrostatic discharge voltage (human body model)	see *Section 5.3.11: Absolute maximum ratings (electrical sensitivity)*		-

1. All main power (V_{DD}, V_{DDA}) and ground (V_{SS}, V_{SSA}) pins must always be connected to the external power supply, in the permitted range.
2. V_{IN} maximum must always be respected. Refer to *Table 6: Current characteristics* for the maximum allowed injected current values.

Table 6. Current characteristics

Symbol	Ratings	Max.	Unit
I_{VDD}	Total current into V_{DD}/V_{DDA} power lines (source)(1)	150	mA
I_{VSS}	Total current out of V_{SS} ground lines (sink)(1)	150	
I_{IO}	Output current sunk by any I/O and control pin	25	
	Output current source by any I/Os and control pin	– 25	
$I_{INJ(PIN)}$(2)	Injected current on five volt tolerant pins(3)	-5/+0	
	Injected current on any other pin(4)	± 5	
$\Sigma I_{INJ(PIN)}$	Total injected current (sum of all I/O and control pins)(5)	± 25	

1. All main power (V_{DD}, V_{DDA}) and ground (V_{SS}, V_{SSA}) pins must always be connected to the external power supply, in the permitted range.
2. Negative injection disturbs the analog performance of the device. See note in *Section 5.3.17: 12-bit ADC characteristics*.
3. Positive injection is not possible on these I/Os. A negative injection is induced by $V_{IN}<V_{SS}$. $I_{INJ(PIN)}$ must never be exceeded. Refer to *Table 5: Voltage characteristics* for the maximum allowed input voltage values.
4. A positive injection is induced by $V_{IN}>V_{DD}$ while a negative injection is induced by $V_{IN}<V_{SS}$. $I_{INJ(PIN)}$ must never be exceeded. Refer to *Table 5: Voltage characteristics* for the maximum allowed input voltage values.
5. When several inputs are submitted to a current injection, the maximum $\Sigma I_{INJ(PIN)}$ is the absolute sum of the positive and negative injected currents (instantaneous values).

Table 7. Thermal characteristics

Symbol	Ratings	Value	Unit
T_{STG}	Storage temperature range	–65 to +150	°C
T_J	Maximum junction temperature	150	°C

5.3 Operating conditions

5.3.1 General operating conditions

Table 8. General operating conditions

Symbol	Parameter	Conditions	Min	Max	Unit
f_{HCLK}	Internal AHB clock frequency	-	0	36	MHz
f_{PCLK1}	Internal APB1 clock frequency	-	0	36	
f_{PCLK2}	Internal APB2 clock frequency	-	0	36	
V_{DD}	Standard operating voltage	-	2	3.6	V
V_{DDA}(1)	Analog operating voltage (ADC not used)	Must be the same potential as V_{DD}(2)	2	3.6	
	Analog operating voltage (ADC used)		2.4	3.6	
V_{BAT}	Backup operating voltage	-	1.8	3.6	

Table 8. General operating conditions (continued)

Symbol	Parameter	Conditions		Min	Max	Unit
V_{IN}	I/O input voltage	Standard IO		–0.3	V_{DD} + 0.3	V
		FT IO(3)	2 V < V_{DD} ≤ 3.6 V	–0.3	5.5	
			V_{DD} = 2 V	–0.3	5.2	
		BOOT0		0	5.5	
P_D	Power dissipation at T_A = 85 °C (4)	LQFP100		-	434	mW
		LQFP64		-	444	
		LQFP48		-	363	
		UFQFPN48		-	624	
		VFQFPN36		-	1000	
T_A	Ambient temperature	Maximum power dissipation		–40	85	°C
		Low power dissipation(5)		–40	105	
T_J	Junction temperature range	-		–40	105	

1. When the ADC is used, refer to *Table 41: ADC characteristics*.
2. It is recommended to power V_{DD} and V_{DDA} from the same source. A maximum difference of 300 mV between V_{DD} and V_{DDA} can be tolerated during power-up and operation.
3. To sustain a voltage higher than V_{DD}+0.3 V, the internal pull-up/pull-down resistors must be disabled.
4. If T_A is lower, higher P_D values are allowed as long as T_J does not exceed $T_J$max (see *Table 6.7: Thermal characteristics on page 90*).
5. In low power dissipation state, T_A can be extended to this range as long as T_J does not exceed $T_J$max (see *Table 6.7: Thermal characteristics on page 90*).

5.3.2 Operating conditions at power-up / power-down

Subject to general operating conditions for T_A.

Table 9. Operating conditions at power-up / power-down

Symbol	Parameter	Conditions	Min	Max	Unit
t_{VDD}	V_{DD} rise time rate	-	0	∞	µs/V
	V_{DD} fall time rate		20	∞	

5.3.3 Embedded reset and power control block characteristics

The parameters given in *Table 10* are derived from tests performed under the ambient temperature and V_{DD} supply voltage conditions summarized in *Table 8*.

Table 10. Embedded reset and power control block characteristics

Symbol	Parameter	Conditions	Min	Typ	Max	Unit
V_{PVD}	Programmable voltage detector level selection	PLS[2:0]=000 (rising edge)	2.1	2.18	2.26	V
		PLS[2:0]=000 (falling edge)	2	2.08	2.16	
		PLS[2:0]=001 (rising edge)	2.19	2.28	2.37	
		PLS[2:0]=001 (falling edge)	2.09	2.18	2.27	
		PLS[2:0]=010 (rising edge)	2.28	2.38	2.48	
		PLS[2:0]=010 (falling edge)	2.18	2.28	2.38	
		PLS[2:0]=011 (rising edge)	2.38	2.48	2.58	
		PLS[2:0]=011 (falling edge)	2.28	2.38	2.48	
		PLS[2:0]=100 (rising edge)	2.47	2.58	2.69	
		PLS[2:0]=100 (falling edge)	2.37	2.48	2.59	
		PLS[2:0]=101 (rising edge)	2.57	2.68	2.79	
		PLS[2:0]=101 (falling edge)	2.47	2.58	2.69	
		PLS[2:0]=110 (rising edge)	2.66	2.78	2.9	
		PLS[2:0]=110 (falling edge)	2.56	2.68	2.8	
		PLS[2:0]=111 (rising edge)	2.76	2.88	3	
		PLS[2:0]=111 (falling edge)	2.66	2.78	2.9	
$V_{PVDhyst}$(2)	PVD hysteresis	-	-	100	-	mV
$V_{POR/PDR}$	Power on/power down reset threshold	Falling edge	1.8(1)	1.88	1.96	V
		Rising edge	1.84	1.92	2.0	
$V_{PDRhyst}$(2)	PDR hysteresis	-	-	40	-	mV
$t_{RSTTEMPO}$(2)	Reset temporization	-	1.5	2.5	4.5	ms

1. The product behavior is guaranteed by design down to the minimum $V_{POR/PDR}$ value.
2. Guaranteed by design, not tested in production.

5.3.4 Embedded reference voltage

The parameters given in *Table 11* are derived from tests performed under the ambient temperature and V_{DD} supply voltage conditions summarized in *Table 8*.

Table 11. Embedded internal reference voltage

Symbol	Parameter	Conditions	Min	Typ	Max	Unit
V_{REFINT}	Internal reference voltage	–40 °C < T_A < +85 °C	1.16	1.20	1.24	V
$T_{S_vrefint}$(1)	ADC sampling time when reading the internal reference voltage	-	-	5.1	17.1(2)	µs
V_{RERINT}(2)	Internal reference voltage spread over the temperature range	V_{DD} = 3 V ±10 mV	-	-	10	mV
T_{Coeff}(2)	Temperature coefficient	-	-	-	100	ppm/ °C

1. Shortest sampling time can be determined in the application by multiple iterations.
2. Guaranteed by design, not tested in production.

5.3.5 Supply current characteristics

The current consumption is a function of several parameters and factors such as the operating voltage, ambient temperature, I/O pin loading, device software configuration, operating frequencies, I/O pin switching rate, program location in memory and executed binary code.
The current consumption is measured as described in *Figure 12: Current consumption measurement scheme*.
All Run-mode current consumption measurements given in this section are performed with a reduced code that gives a consumption equivalent to Dhrystone 2.1 code.

Maximum current consumption

The MCU is placed under the following conditions:

- All I/O pins are in input mode with a static value at V_{DD} or V_{SS} (no load)
- All peripherals are disabled except if it is explicitly mentioned
- The Flash access time is adjusted to f_{HCLK} frequency (0 wait state from 0 to 24 MHz, 1 wait state from 24 to 36 MHz)
- Prefetch in on (reminder: this bit must be set before clock setting and bus prescaling)
- When the peripherals are enabled $f_{PCLK1} = f_{HCLK/2}$, $f_{PCLK2} = f_{HCLK}$

The parameters given in *Table 12* are derived from tests performed under the ambient temperature and V_{DD} supply voltage conditions summarized in *Table 8*.

Table 12. Maximum current consumption in Run mode, code with data processing running from Flash

Symbol	Parameter	Conditions	f_{HCLK}	Max(1) T_A = 85 °C	Unit
I_{DD}	Supply current in Run mode	External clock (2), all peripherals enabled	36 MHz	28.6	mA
			24 MHz	19.9	
			16 MHz	14.7	
			8 MHz	8.6	
		External clock (2), all peripherals Disabled	36 MHz	19.8	
			24 MHz	13.9	
			16 MHz	10.7	
			8 MHz	6.8	

1. Based on characterization, not tested in production.
2. External clock is 8 MHz and PLL is on when f_{HCLK} > 8 MHz.

Table 13. Maximum current consumption in Run mode, code with data processing running from RAM

Symbol	Parameter	Conditions	f_{HCLK}	Max(1) T_A = 85 °C	Unit
I_{DD}	Supply current in Run mode	External clock (2), all peripherals enabled	36 MHz	24	mA
			24 MHz	17.5	
			16 MHz	12.5	
			8 MHz	7.5	
		External clock(2) all peripherals disabled	36 MHz	16	
			24 MHz	11.5	
			16 MHz	8.5	
			8 MHz	5.5	

1. Based on characterization, tested in production at V_{DD} max, f_{HCLK} max.
2. External clock is 8 MHz and PLL is on when f_{HCLK} > 8 MHz.

Figure 13. Typical current consumption in Run mode versus frequency (at 3.6 V) - code with data processing running from RAM, peripherals enabled

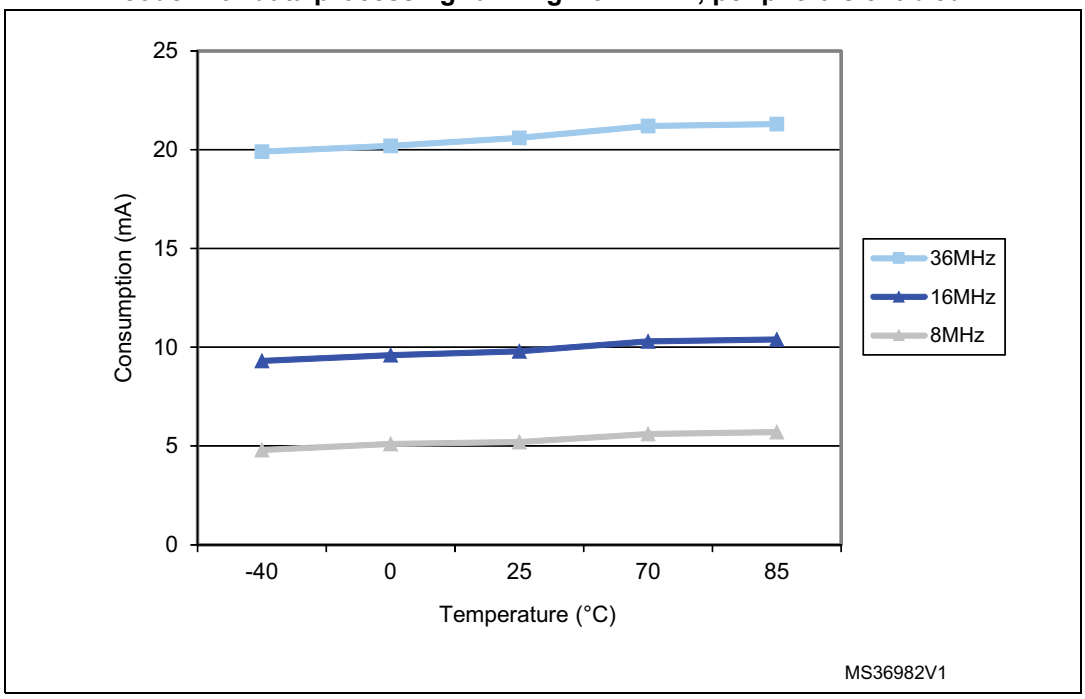

Figure 14. Typical current consumption in Run mode versus frequency (at 3.6 V) - code with data processing running from RAM, peripherals disabled

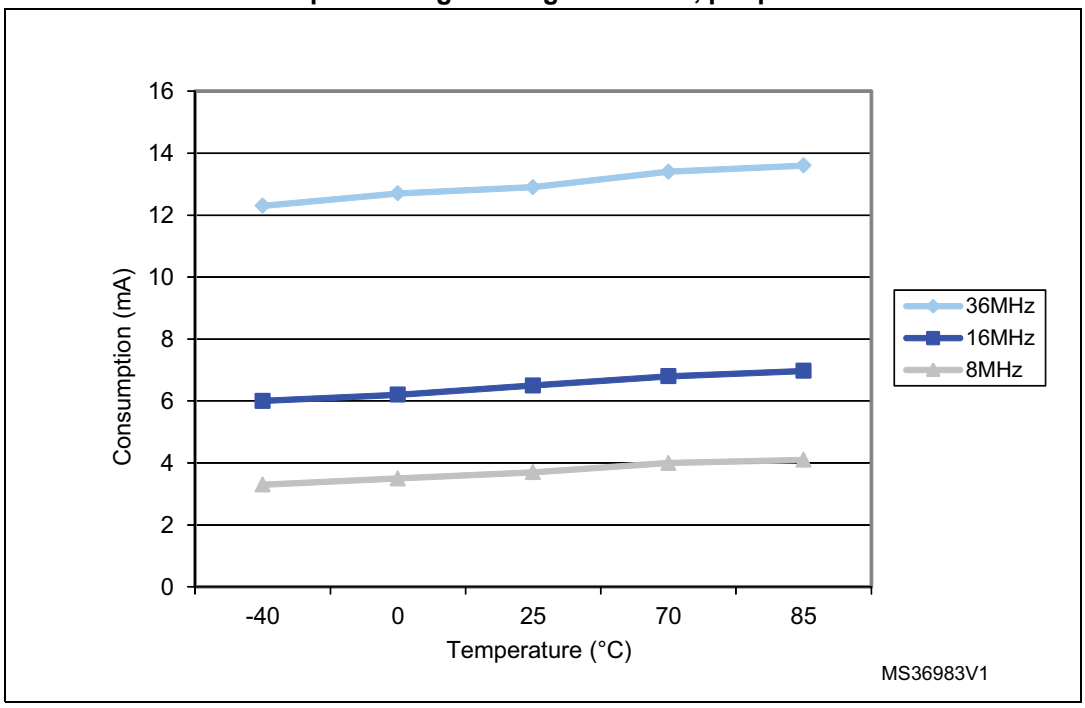

Table 14. Maximum current consumption in Sleep mode, code running from Flash or RAM

Symbol	Parameter	Conditions	f_{HCLK}	Max(1)	Unit
				T_A = 85 °C	
I_{DD}	Supply current in Sleep mode	External clock(2) all peripherals enabled	36 MHz	15.5	mA
			24 MHz	11.5	
			16 MHz	8.5	
			8 MHz	5.5	
		External clock(2), all peripherals disabled	36 MHz	5	
			24 MHz	4.5	
			16 MHz	4	
			8 MHz	3	

1. Based on characterization, tested in production at V_{DD} max and f_{HCLK} max with peripherals enabled.
2. External clock is 8 MHz and PLL is on when f_{HCLK} > 8 MHz.

Table 15. Typical and maximum current consumptions in Stop and Standby modes

Symbol	Parameter	Conditions	Typ(1)			Max	Unit
			V_{DD}/V_{BAT} = 2.0 V	V_{DD}/V_{BAT} = 2.4 V	V_{DD}/V_{BAT} = 3.3 V	T_A = 85 °C(2)	
I_{DD}	Supply current in Stop mode	Regulator in Run mode, Low-speed and high-speed internal RC oscillators and high-speed oscillator OFF (no independent watchdog)	-	23.5	24	200	µA
		Regulator in Low-Power mode, Low-speed and high-speed internal RC oscillators and high-speed oscillator OFF (no independent watchdog)	-	13.5	14	180	
	Supply current in Standby mode	Low-speed internal RC oscillator and independent watchdog ON	-	2.6	3.4	-	
		Low-speed internal RC oscillator ON, independent watchdog OFF	-	2.4	3.2	-	
		Low-speed internal RC oscillator and independent watchdog OFF, low-speed oscillator and RTC OFF	-	1.7	2	4	
I_{DD_VBAT}	Backup domain supply current	Low-speed oscillator and RTC ON	0.9	1.1	1.4	1.9	

1. Typical values are measured at T_A = 25 °C.
2. Based on characterization, not rested in production.

Figure 15. Typical current consumption on V_{BAT} with RTC on versus temperature at different V_{BAT} values

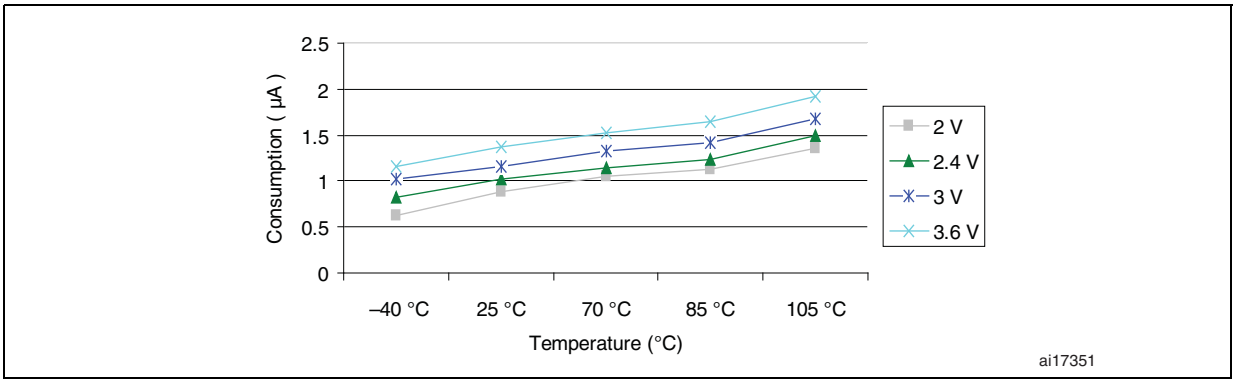

Figure 16. Typical current consumption in Stop mode with regulator in Run mode versus temperature at V_{DD} = 3.3 V and 3.6 V

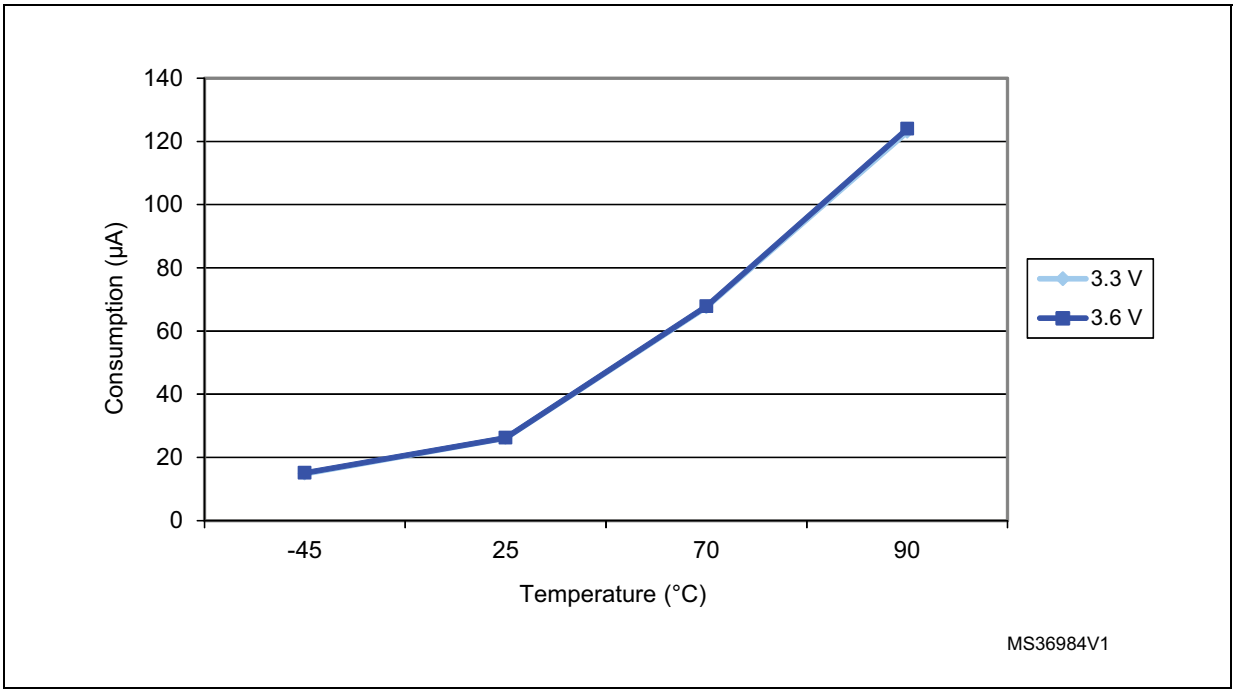

Figure 17. Typical current consumption in Stop mode with regulator in Low-power mode versus temperature at V_{DD} = 3.3 V and 3.6 V

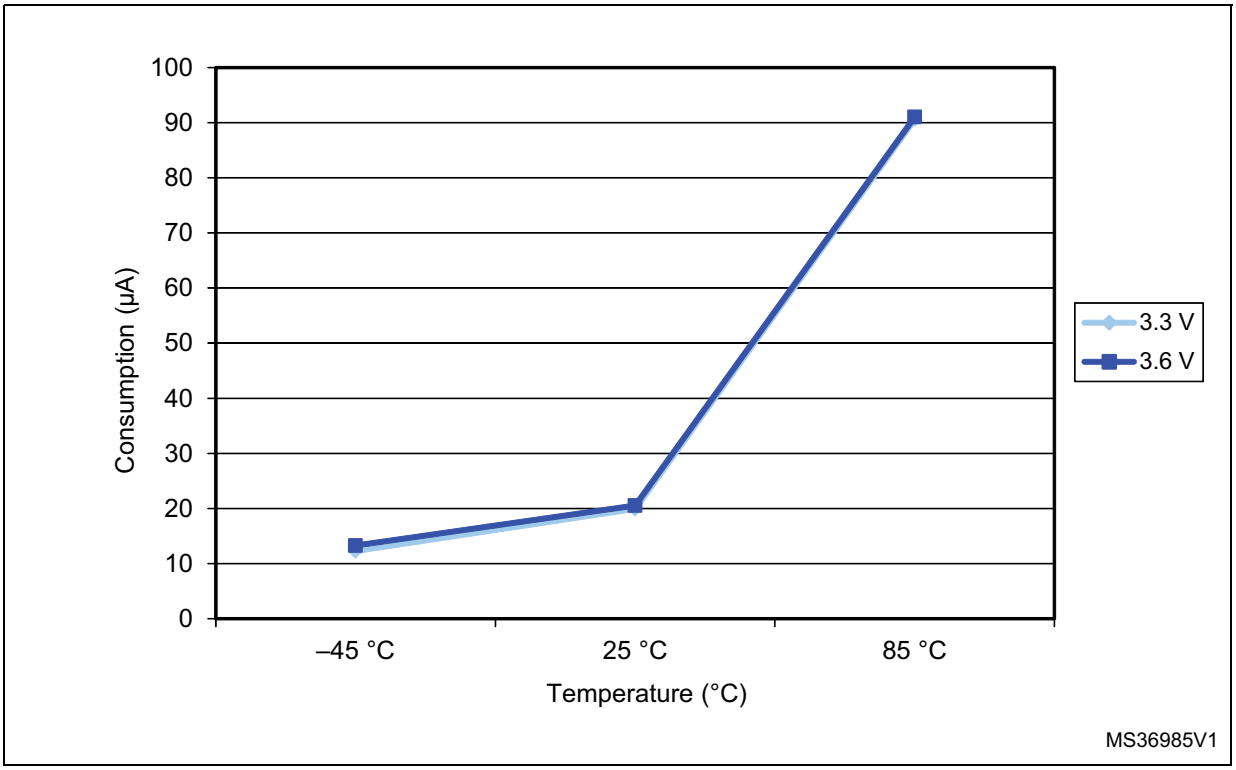

Figure 18. Typical current consumption in Standby mode versus temperature at V_{DD} = 3.3 V and 3.6 V

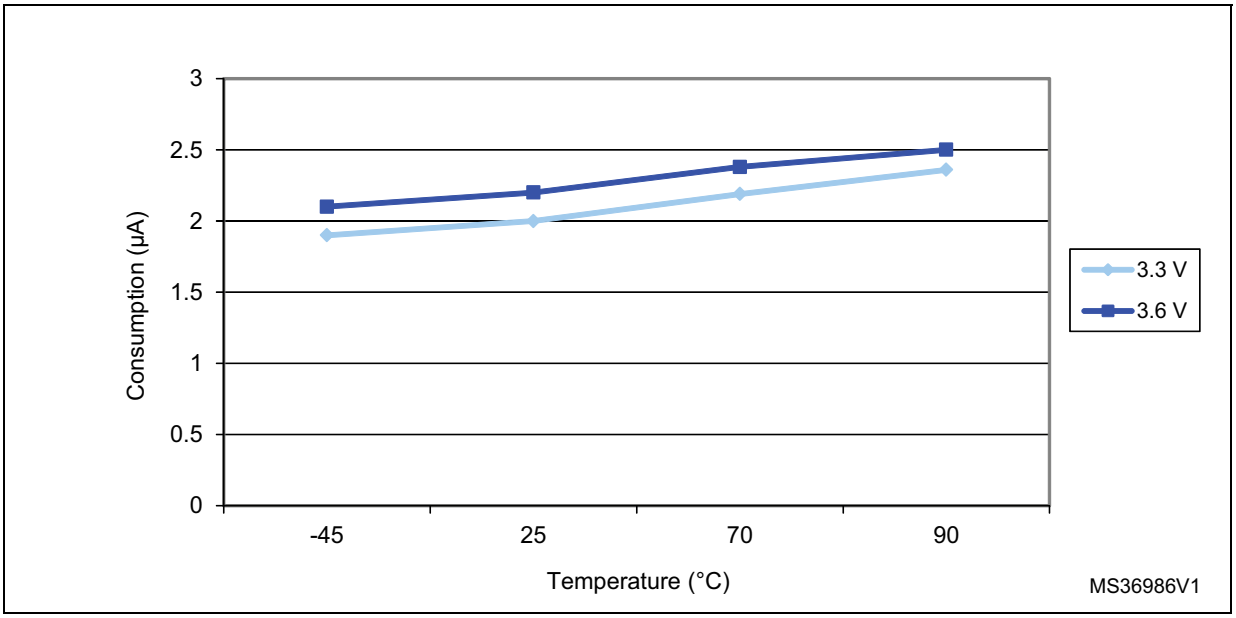

Typical current consumption

The MCU is placed under the following conditions:

- All I/O pins are in input mode with a static value at V_{DD} or V_{SS} (no load)
- All peripherals are disabled except if it is explicitly mentioned
- The Flash access time is adjusted to f_{HCLK} frequency (0 wait state from 0 to 24 MHz, 1 wait state from 24 to 36 MHz)
- Prefetch is on (reminder: this bit must be set before clock setting and bus prescaling)
- When the peripherals are enabled $f_{PCLK1} = f_{HCLK/4}$, $f_{PCLK2} = f_{HCLK/2}$, $f_{ADCCLK} = f_{PCLK2}/4$

The parameters given in *Table 16* are derived from tests performed under the ambient temperature and V_{DD} supply voltage conditions summarized in *Table 8*.

Table 16. Typical current consumption in Run mode, code with data processing running from Flash

Symbol	Parameter	Conditions	f_{HCLK}	Typ(1) All peripherals enabled(2)	Typ(1) All peripherals disabled	Unit
I_{DD}	Supply current in Run mode	External clock(3)	36 MHz	19	14.8	mA
			24 MHz	12.9	10.1	
			16 MHz	9.3	7.4	
			8 MHz	5.5	4.6	
			4 MHz	3.3	2.8	
			2 MHz	2.2	1.9	
			1 MHz	1.6	1.45	
			500 kHz	1.3	1.25	
			125 kHz	1.08	1.06	
		Running on high speed internal RC (HSI), AHB prescaler used to reduce the frequency	36 MHz	18.3	14.1	
			24 MHz	12.2	9.5	
			16 MHz	8.5	6.8	
			8 MHz	4.9	4	
			4 MHz	2.7	2.2	
			2 MHz	1.6	1.4	
			1 MHz	1.02	0.9	
			500 kHz	0.73	0.67	
			125 kHz	0.5	0.48	

1. Typical values are measures at T_A = 25 °C, V_{DD} = 3.3 V.
2. Add an additional power consumption of 0.8 mA per ADC for the analog part. In applications, this consumption occurs only while the ADC is on (ADON bit is set in the ADC_CR2 register).
3. External clock is 8 MHz and PLL is on when f_{HCLK} > 8 MHz.

Table 17. Typical current consumption in Sleep mode, code running from Flash or RAM

Symbol	Parameter	Conditions	f_{HCLK}	Typ(1) All peripherals enabled(2)	Typ(1) All peripherals disabled	Unit
I_{DD}	Supply current in Sleep mode	External clock(3)	36 MHz	7.6	3.1	mA
			24 MHz	5.3	2.3	
			16 MHz	3.8	1.8	
			8 MHz	2.1	1.2	
			4 MHz	1.6	1.1	
			2 MHz	1.3	1	
			1 MHz	1.11	0.98	
			500 kHz	1.04	0.96	
			125 kHz	0.98	0.95	
		Running on High Speed Internal RC (HSI), AHB prescaler used to reduce the frequency	36 MHz	7	2.5	
			24 MHz	4.8	1.8	
			16 MHz	3.2	1.2	
			8 MHz	1.6	0.6	
			4 MHz	1	0.5	
			2 MHz	0.72	0.47	
			1 MHz	0.56	0.44	
			500 kHz	0.49	0.42	
			125 kHz	0.43	0.41	

1. Typical values are measures at T_A = 25 °C, V_{DD} = 3.3 V.
2. Add an additional power consumption of 0.8 mA per ADC for the analog part. In applications, this consumption occurs only while the ADC is on (ADON bit is set in the ADC_CR2 register).
3. External clock is 8 MHz and PLL is on when f_{HCLK} > 8 MHz.

On-chip peripheral current consumption

The current consumption of the on-chip peripherals is given in *Table 18*. The MCU is placed under the following conditions:

- all I/O pins are in input mode with a static value at V_{DD} or V_{SS} (no load)
- all peripherals are disabled unless otherwise mentioned
- the given value is calculated by measuring the current consumption
  - with all peripherals clocked off
  - with only one peripheral clocked on
- ambient operating temperature and V_{DD} supply voltage conditions summarized in *Table 5*.

Table 18. Peripheral current consumption

Peripheral		Typical consumption at 25 °C[1]	Unit
AHB (up to 36 MHz)	DMA1	16.53	μA/MHz
	BusMatrix[2]	8.33	
APB1 (up to 18 MHz)	APB1-Bridge	10.28	
	TIM2	32.50	
	TIM3	31.39	
	TIM4	31.94	
	SPI2	4.17	
	USART2	12.22	
	USART3	12.22	
	I2C1	10.00	
	I2C2	10.00	
	WWDG	2.50	
	PWR	1.67	
	BKP	2.50	
	IWDG	11.67	
APB2 (up to 36 MHz)	APB2-Bridge	3.75	
	GPIO A	6.67	
	GPIO B	6.53	
	GPIO C	6.53	
	GPIO D	6.53	
	GPIO E	6.39	
	ADC1[3]	17.50	
	SPI1	4.72	
	USART1	11.94	

1. f_{HCLK} = 36 MHz, $f_{APB1} = f_{HCLK}/2$, $f_{APB2} = f_{HCLK}$, default prescaler value for each peripheral.
2. The BusMatrix is automatically active when at least one master is ON.
3. Specific conditions for ADC: f_{HCLK} = 28 MHz, $f_{APB1} = f_{HCLK}/2$, $f_{APB2} = f_{HCLK}$, $f_{ADCCLK} = f_{APB2}/2$. When ADON bit in the ADC_CR2 register is set to 1, the consumption added is equal to 0.65 mA. When the ADC is enabled, a current consumption is added equal to 0.05 mA.

5.3.6 External clock source characteristics

High-speed external user clock generated from an external source

The characteristics given in *Table 19* result from tests performed using an high-speed external clock source, and under the ambient temperature and supply voltage conditions summarized in *Table 8*.

Table 19. High-speed external user clock characteristics

Symbol	Parameter	Conditions	Min	Typ	Max	Unit
f_{HSE_ext}	User external clock source frequency(1)	-	1	8	25	MHz
V_{HSEH}	OSC_IN input pin high level voltage		$0.7V_{DD}$	-	V_{DD}	V
V_{HSEL}	OSC_IN input pin low level voltage		V_{SS}	-	$0.3V_{DD}$	
$t_{w(HSE)}$ $t_{w(HSE)}$	OSC_IN high or low time(1)		5	-	-	ns
$t_{r(HSE)}$ $t_{f(HSE)}$	OSC_IN rise or fall time(1)		-	-	20	
$C_{in(HSE)}$	OSC_IN input capacitance(1)	-	-	5	-	pF
$DuCy_{(HSE)}$	Duty cycle	-	45	-	55	%
I_L	OSC_IN Input leakage current	$V_{SS} \leq V_{IN} \leq V_{DD}$	-	-	±1	µA

1. Guaranteed by design, not tested in production.

Low-speed external user clock generated from an external source

The characteristics given in *Table 20* result from tests performed using an low-speed external clock source, and under the ambient temperature and supply voltage conditions summarized in *Table 8*.

Table 20. Low-speed external user clock characteristics

Symbol	Parameter	Conditions	Min	Typ	Max	Unit
f_{LSE_ext}	User external clock source frequency(1)	-	-	32.768	1000	kHz
V_{LSEH}	OSC32_IN input pin high level voltage		$0.7V_{DD}$	-	V_{DD}	V
V_{LSEL}	OSC32_IN input pin low level voltage		V_{SS}	-	$0.3V_{DD}$	
$t_{w(LSE)}$ $t_{w(LSE)}$	OSC32_IN high or low time(1)		450	-	-	ns
$t_{r(LSE)}$ $t_{f(LSE)}$	OSC32_IN rise or fall time(1)		-	-	50	
$C_{in(LSE)}$	OSC32_IN input capacitance(1)	-	-	5	-	pF
$DuCy_{(LSE)}$	Duty cycle	-	30	-	70	%
I_L	OSC32_IN Input leakage current	$V_{SS} \leq V_{IN} \leq V_{DD}$	-	-	±1	µA

1. Guaranteed by design, not tested in production.

Figure 19. High-speed external clock source AC timing diagram

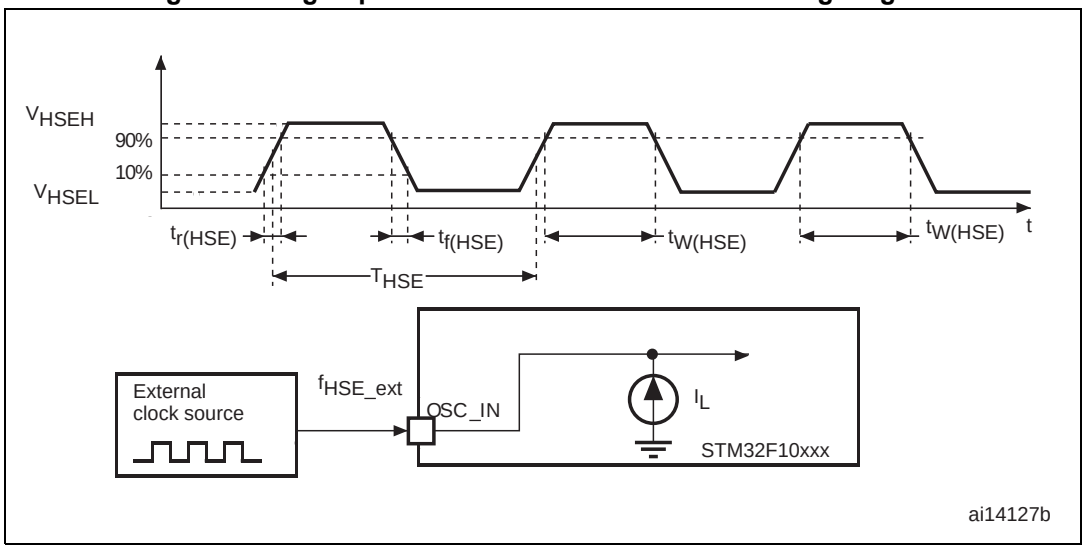

Figure 20. Low-speed external clock source AC timing diagram

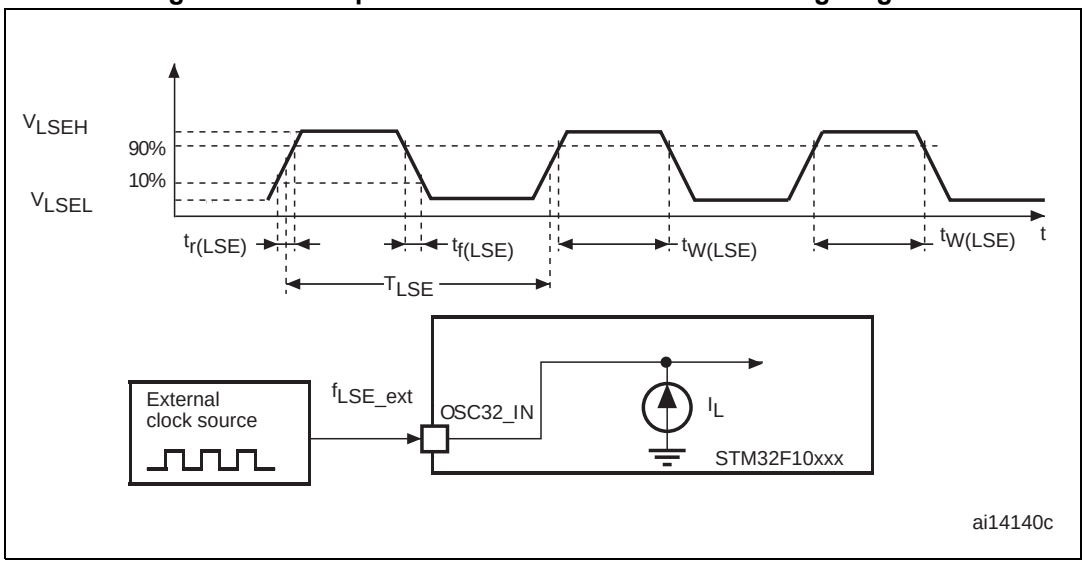

High-speed external clock generated from a crystal/ceramic resonator

The high-speed external (HSE) clock can be supplied with a 4 to 16 MHz crystal/ceramic resonator oscillator. All the information given in this paragraph are based on characterization results obtained with typical external components specified in *Table 21*. In the application, the resonator and the load capacitors have to be placed as close as possible to the oscillator pins in order to minimize output distortion and startup stabilization time. Refer to the crystal resonator manufacturer for more details on the resonator characteristics (frequency, package, accuracy).

Table 21. HSE 4-16 MHz oscillator characteristics(1)(2)

Symbol	Parameter	Conditions	Min	Typ	Max	Unit
f_{OSC_IN}	Oscillator frequency	-	4	8	16	MHz
R_F	Feedback resistor	-	-	200	-	kΩ
C	Recommended load capacitance versus equivalent serial resistance of the crystal (R_S)(3)	R_S = 30 Ω	-	30	-	pF
i_2	HSE driving current	V_{DD} = 3.3 V, V_{IN} = V_{SS} with 30 pF load	-	-	1	mA
g_m	Oscillator transconductance	Startup	25	-	-	mA/V
$t_{SU(HSE)}$(4)	Startup time	V_{DD} is stabilized	-	2	-	ms

1. Resonator characteristics given by the crystal/ceramic resonator manufacturer.
2. Based on characterization, not tested in production.
3. The relatively low value of the RF resistor offers a good protection against issues resulting from use in a humid environment, due to the induced leakage and the bias condition change. However, it is recommended to take this point into account if the MCU is used in tough humidity conditions.
4. $t_{SU(HSE)}$ is the startup time measured from the moment it is enabled (by software) to a stabilized 8 MHz oscillation is reached. This value is measured for a standard crystal resonator and it can vary significantly with the crystal manufacturer

For C_{L1} and C_{L2}, it is recommended to use high-quality external ceramic capacitors in the 5 pF to 25 pF range (typ.), designed for high-frequency applications, and selected to match the requirements of the crystal or resonator (see *Figure 21*). C_{L1} and C_{L2} are usually the same size. The crystal manufacturer typically specifies a load capacitance which is the series combination of C_{L1} and C_{L2}. PCB and MCU pin capacitance must be included (10 pF can be used as a rough estimate of the combined pin and board capacitance) when sizing C_{L1} and C_{L2}. Refer to the application note AN2867 “Oscillator design guide for ST microcontrollers” available from the ST website *www.st.com*.

Figure 21. Typical application with an 8 MHz crystal

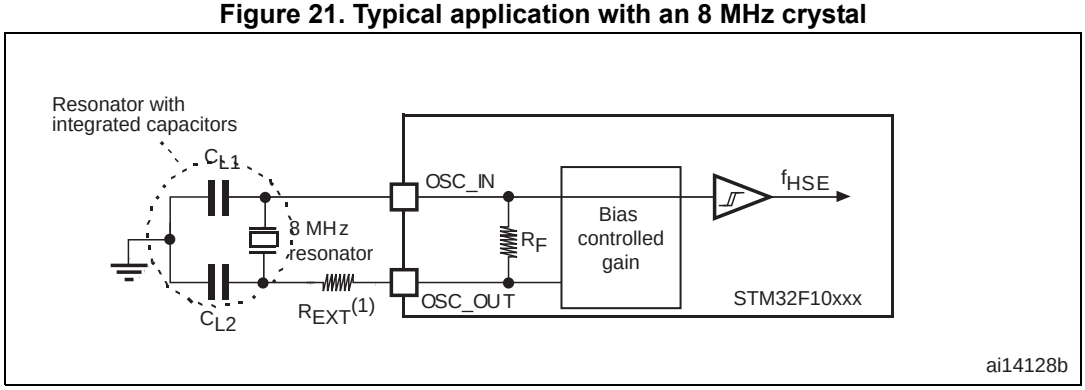

1. R_{EXT} value depends on the crystal characteristics.

Low-speed external clock generated from a crystal/ceramic resonator

The low-speed external (LSE) clock can be supplied with a 32.768 kHz crystal/ceramic resonator oscillator. All the information given in this paragraph are based on characterization results obtained with typical external components specified in *Table 22*. In the application, the resonator and the load capacitors have to be placed as close as possible to the oscillator pins in order to minimize output distortion and startup stabilization

time. Refer to the crystal resonator manufacturer for more details on the resonator characteristics (frequency, package, accuracy).

Table 22. LSE oscillator characteristics (f_{LSE} = 32.768 kHz)(1) (2)

Symbol	Parameter	Conditions	-	Min	Typ	Max	Unit
R_F	Feedback resistor	-	-	-	5	-	MΩ
C	Recommended load capacitance versus equivalent serial resistance of the crystal (R_S)	R_S = 30 KΩ	-	-	-	15	pF
I_2	LSE driving current	V_{DD} = 3.3 V V_{IN} = V_{SS}	-	-	-	1.4	µA
g_m	Oscillator transconductance	-	-	5	-	-	µA/V
$t_{SU(LSE)}$(3)	Startup time	V_{DD} is stabilized	T_A = 50 °C	-	1.5	-	s
			T_A = 25 °C	-	2.5	-	
			T_A = 10 °C	-	4	-	
			T_A = 0 °C	-	6	-	
			T_A = -10 °C	-	10	-	
			T_A = -20 °C	-	17	-	
			T_A = -30 °C	-	32	-	
			T_A = -40 °C	-	60	-	

1. Based on characterization, not tested in production.
2. Refer to the note and caution paragraphs below the table, and to the application note AN2867 “Oscillator design guide for ST microcontrollers”.
3. $t_{SU(LSE)}$ is the startup time measured from the moment it is enabled (by software) to a stabilized 32.768 kHz oscillation is reached. This value is measured for a standard crystal and it can vary significantly with the crystal manufacturer

Note: For CL1 and CL2 it is recommended to use high-quality ceramic capacitors in the 5 pF to 15 pF range selected to match the requirements of the crystal or resonator. CL1 and CL2, are usually the same size. The crystal manufacturer typically specifies a load capacitance which is the series combination of CL1 and CL2.
Load capacitance CL *has the following formula:* CL = CL1 *x* CL2 */ (*CL1 + CL2*) +* C_{stray} *where* C_{stray} *is the pin capacitance and board or trace PCB-related capacitance. Typically, it is between 2 pF and 7 pF.*

Caution: To avoid exceeding the maximum value of CL1 and CL2 (15 pF) it is strongly recommended to use a resonator with a load capacitance CL ≤ 7 pF. Never use a resonator with a load capacitance of 12.5 pF.
Example: if resonator with a load capacitance of CL = 6 pF, and C_{stray} = 2 pF is chosen, then CL1 = CL2 = 8 pF.

Figure 22. Typical application with a 32.768 kHz crystal

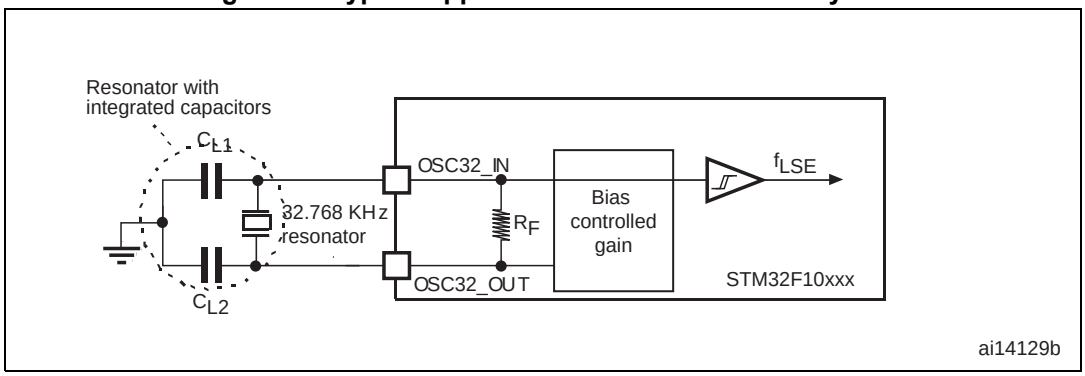

5.3.7 Internal clock source characteristics

The parameters given in *Table 23* are derived from tests performed under the ambient temperature and V_{DD} supply voltage conditions summarized in *Table 8*.

High-speed internal (HSI) RC oscillator

Table 23. HSI oscillator characteristics(1)

Symbol	Parameter	Conditions		Min	Typ	Max	Unit
f_{HSI}	Frequency	-		-	8	-	MHz
$DuCy_{(HSI)}$	Duty cycle	-		45	-	55	%
ACC_{HSI}	Accuracy of the HSI oscillator	User-trimmed with the RCC_CR register(2)		-	-	1(3)	%
		Factory-calibrated (4) (5)	T_A = –40 to 105 °C	–2	-	2.5	%
			T_A = –10 to 85 °C	–1.5	-	2.2	%
			T_A = 0 to 70 °C	–1.3	-	2	%
			T_A = 25 °C	–1.1	-	1.8	%
$t_{su(HSI)}$(4)	HSI oscillator startup time	-		1	-	2	µs
$I_{DD(HSI)}$(4)	HSI oscillator power consumption	-		-	80	100	µA

1. V_{DD} = 3.3 V, T_A = –40 to 105 °C unless otherwise specified.
2. Refer to application note AN2868 “STM32F10xxx internal RC oscillator (HSI) calibration” available from the ST website *www.st.com*.
3. Guaranteed by design, not tested in production.
4. Based on characterization, not tested in production.
5. The actual frequency of HSI oscillator may be impacted by a reflow, but does not drift out of the specified range.

Low-speed internal (LSI) RC oscillator

Table 24. LSI oscillator characteristics (1)

Symbol	Parameter	Min	Typ	Max	Unit
f_{LSI}(2)	Frequency	30	40	60	kHz
$t_{su(LSI)}$(3)	LSI oscillator startup time	-	-	85	µs
$I_{DD(LSI)}$(3)	LSI oscillator power consumption	-	0.65	1.2	µA

1. V_{DD} = 3 V, T_A = –40 to 85 °C unless otherwise specified.
2. Based on characterization, not tested in production.
3. Guaranteed by design, not tested in production.

Wakeup time from low-power mode

The wakeup times given in *Table 25* are measured on a wakeup phase with an 8-MHz HSI RC oscillator. The clock source used to wake up the device depends from the current operating mode:

- Stop or Standby mode: the clock source is the RC oscillator
- Sleep mode: the clock source is the clock that was set before entering Sleep mode.

All timings are derived from tests performed under the ambient temperature and V_{DD} supply voltage conditions summarized in *Table 8*.

Table 25. Low-power mode wakeup timings

Symbol	Parameter	Typ	Unit
$t_{WUSLEEP}$(1)	Wakeup from Sleep mode	1.8	µs
t_{WUSTOP}(1)	Wakeup from Stop mode (regulator in run mode)	3.6	µs
	Wakeup from Stop mode (regulator in low-power mode)	5.4	
$t_{WUSTDBY}$(1)	Wakeup from Standby mode	50	µs

1. The wakeup times are measured from the wakeup event to the point at which the user application code reads the first instruction.

5.3.8 PLL characteristics

The parameters given in *Table 26* are derived from tests performed under the ambient temperature and V_{DD} supply voltage conditions summarized in *Table 8*.

Table 26. PLL characteristics

Symbol	Parameter	Value			Unit
		Min(1)	Typ	Max(1)	
f_{PLL_IN}	PLL input clock(2)	1	8.0	25	MHz
	PLL input clock duty cycle	40	-	60	%
f_{PLL_OUT}	PLL multiplier output clock	16	-	36	MHz

Table 26. PLL characteristics (continued)

Symbol	Parameter	Value			Unit
		Min(1)	Typ	Max(1)	
t_{LOCK}	PLL lock time	-	-	200	µs
Jitter	Cycle-to-cycle jitter	-	-	300	ps

1. Based on device characterization, not tested in production.
2. Take care of using the appropriate multiplier factors so as to have PLL input clock values compatible with the range defined by f_{PLL_OUT}.

5.3.9 Memory characteristics

Flash memory

The characteristics are given at T_A = –40 to 85 °C unless otherwise specified.

Table 27. Flash memory characteristics

Symbol	Parameter	Conditions	Min(1)	Typ	Max(1)	Unit
t_{prog}	16-bit programming time	T_A = –40 to +85 °C	40	52.5	70	µs
t_{ERASE}	Page (1 KB) erase time	T_A = –40 to +85 °C	20	-	40	ms
t_{ME}	Mass erase time	T_A = –40 to +85 °C	20	-	40	ms
I_{DD}	Supply current	Read mode f_{HCLK} = 36 MHz with 1 wait state, V_{DD} = 3.3 V	-	-	20	mA
		Write / Erase modes f_{HCLK} = 36 MHz, V_{DD} = 3.3 V	-	-	5	mA
		Power-down mode / Halt, V_{DD} = 3.0 to 3.6 V	-	-	50	µA
V_{prog}	Programming voltage	-	2	-	3.6	V

1. Guaranteed by design, not tested in production.

5.3.10 EMC characteristics

Susceptibility tests are performed on a sample basis during device characterization.

Functional EMS (Electromagnetic susceptibility)

While a simple application is executed on the device (toggling 2 LEDs through I/O ports). the device is stressed by two electromagnetic events until a failure occurs. The failure is indicated by the LEDs:

- **Electrostatic discharge (ESD)** (positive and negative) is applied to all device pins until a functional disturbance occurs. This test is compliant with the IEC 61000-4-2 standard.
- **FTB**: A Burst of Fast Transient voltage (positive and negative) is applied to V_{DD} and V_{SS} through a 100 pF capacitor, until a functional disturbance occurs. This test is compliant with the IEC 61000-4-4 standard.

A device reset allows normal operations to be resumed.

The test results are given in *Table 28*. They are based on the EMS levels and classes defined in application note AN1709.

Table 28. EMS characteristics

Symbol	Parameter	Conditions	Level/Class
V_{FESD}	Voltage limits to be applied on any I/O pin to induce a functional disturbance	V_{DD} = 3.3 V, T_A = +25 °C, f_{HCLK}= 36 MHz conforms to IEC 61000-4-2	2B
V_{EFTB}	Fast transient voltage burst limits to be applied through 100 pF on V_{DD} and V_{SS} pins to induce a functional disturbance	V_{DD} = 3.3 V, T_A = +25 °C, f_{HCLK} = 36 MHz conforms to IEC 61000-4-4	4A

Designing hardened software to avoid noise problems

EMC characterization and optimization are performed at component level with a typical application environment and simplified MCU software. It should be noted that good EMC performance is highly dependent on the user application and the software in particular.

Therefore it is recommended that the user applies EMC software optimization and pre qualification tests in relation with the EMC level requested for his application.

Software recommendations

The software flowchart must include the management of runaway conditions such as:

- Corrupted program counter
- Unexpected reset
- Critical Data corruption (control registers...)

Prequalification trials

Most of the common failures (unexpected reset and program counter corruption) can be reproduced by manually forcing a low state on the NRST pin or the Oscillator pins for 1 second. To complete these trials, ESD stress can be applied directly on the device, over the range of specification values. When unexpected behavior is detected, the software can be hardened to prevent unrecoverable errors occurring (see application note AN1015).

Electromagnetic Interference (EMI)

The electromagnetic field emitted by the device is monitored while a simple application is executed (toggling 2 LEDs through the I/O ports). This emission test is compliant with IEC61967-2 standard which specifies the test board and the pin loading.

Table 29. EMI characteristics

Symbol	Parameter	Conditions	Monitored frequency band	Max vs. [f_{HSE}/f_{HCLK}]	Unit
				8/36 MHz	
S_{EMI}	Peak level	V_{DD} = 3.3 V, T_A = 25 °C, LQFP100 package compliant with IEC 61967-2	0.1 MHz to 30 MHz	7	dBµV
			30 MHz to 130 MHz	8	
			130 MHz to 1GHz	13	
			SAE EMI Level	3.5	-

5.3.11 Absolute maximum ratings (electrical sensitivity)

Based on three different tests (ESD, LU) using specific measurement methods, the device is stressed in order to determine its performance in terms of electrical sensitivity.

Electrostatic discharge (ESD)

Electrostatic discharges (a positive then a negative pulse separated by 1 second) are applied to the pins of each sample according to each pin combination. The sample size depends on the number of supply pins in the device (3 parts × (n+1) supply pins). This test conforms to the JESD22-A114/C101 standard.

Table 30. ESD absolute maximum ratings

Symbol	Ratings	Conditions	Class	Maximum value(1)	Unit
$V_{ESD(HBM)}$	Electrostatic discharge voltage (human body model)	T_A = +25 °C conforming to JESD22-A114	2	2000	V
$V_{ESD(CDM)}$	Electrostatic discharge voltage (charge device model)	T_A = +25 °C conforming to ANSI/ESD STM5.3.1	II	500	

1. Based on characterization results, not tested in production.

Static latch-up

Two complementary static tests are required on six parts to assess the latch-up performance:

- A supply overvoltage is applied to each power supply pin
- A current injection is applied to each input, output and configurable I/O pin

These tests are compliant with EIA/JESD 78 IC latch-up standard.

Table 31. Electrical sensitivities

Symbol	Parameter	Conditions	Class
LU	Static latch-up class	T_A = +85 °C conforming to JESD78A	II level A

5.3.12 I/O current injection characteristics

As a general rule, current injection to the I/O pins, due to external voltage below V_{SS} or above V_{DD} (for standard, 3 V-capable I/O pins) should be avoided during normal product operation. However, in order to give an indication of the robustness of the microcontroller in cases when abnormal injection accidentally happens, susceptibility tests are performed on a sample basis during device characterization.

Functional susceptibilty to I/O current injection

While a simple application is executed on the device, the device is stressed by injecting current into the I/O pins programmed in floating input mode. While current is injected into the I/O pin, one at a time, the device is checked for functional failures.

The failure is indicated by an out of range parameter: ADC error above a certain limit (>5 LSB TUE), out of spec current injection on adjacent pins or other functional failure (for example reset, oscillator frequency deviation).

The test results are given in *Table 32*

Table 32. I/O current injection susceptibility

Symbol	Description	Functional susceptibility		Unit
		Negative injection	Positive injection	
I_{INJ}	Injected current on OSC_IN32, OSC_OUT32, PA4, PA5, PC13	-0	+0	mA
	Injected current on all FT pins	-5	+0	
	Injected current on any other pin	-5	+5	

5.3.13 I/O port characteristics

General input/output characteristics

Unless otherwise specified, the parameters given in *Table 33* are derived from tests performed under the conditions summarized in *Table 8*. All I/Os are CMOS and TTL compliant.

Table 33. I/O static characteristics

Symbol	Parameter	Conditions	Min	Typ	Max	Unit
V_{IL}	Low level input voltage	Standard IO input low level voltage	-	-	$0.28*(V_{DD}-2\ V)+0.8\ V$(1)	V
		IO FT(3) input low level voltage	-	-	$0.32*(V_{DD}-2\ V)+0.75\ V$(1)	
		All I/Os except BOOT0	-	-	$0.35V_{DD}$(2)	
V_{IH}	High level input voltage	Standard IO input high level voltage	$0.41*(V_{DD}-2\ V)+1.3\ V$(1)	-	-	
		IO FT(3) input high level voltage	$0.42*(V_{DD}-2\ V)+1\ V$(1)	-	-	
		All I/Os except BOOT0	$0.65V_{DD}$(2)	-	-	
V_{hys}	Standard IO Schmitt trigger voltage hysteresis(4)	-	200	-	-	mV
	IO FT Schmitt trigger voltage hysteresis(4)	-	5% V_{DD}(5)	-	-	
I_{lkg}	Input leakage current (6)	$V_{SS} \leq V_{IN} \leq V_{DD}$ Standard I/Os	-	-	±1	µA
		V_{IN} = 5 V I/O FT	-	-	3	
R_{PU}	Weak pull-up equivalent resistor(7)	$V_{IN} = V_{SS}$	30	40	50	kΩ
R_{PD}	Weak pull-down equivalent resistor(7)	$V_{IN} = V_{DD}$	30	40	50	
C_{IO}	I/O pin capacitance	-	-	5	-	pF

1. Data based on design simulation.
2. Tested in production.
3. FT = Five-volt tolerant. In order to sustain a voltage higher than V_{DD}+0.3 the internal pull-up/pull-down resistors must be disabled.
4. Hysteresis voltage between Schmitt trigger switching levels. Based on characterization, not tested in production.
5. With a minimum of 100 mV.
6. Leakage could be higher than max. if negative current is injected on adjacent pins.
7. Pull-up and pull-down resistors are designed with a true resistance in series with a switchable PMOS/NMOS. This PMOS/NMOS contribution to the series resistance is minimum (~10% order).

All I/Os are CMOS and TTL compliant (no software configuration required). Their characteristics cover more than the strict CMOS-technology or TTL parameters. The coverage of these requirements is shown in *Figure 23* and *Figure 24* for standard I/Os, and in *Figure 25* and *Figure 26* for 5 V tolerant I/Os.

Figure 23. Standard I/O input characteristics - CMOS port

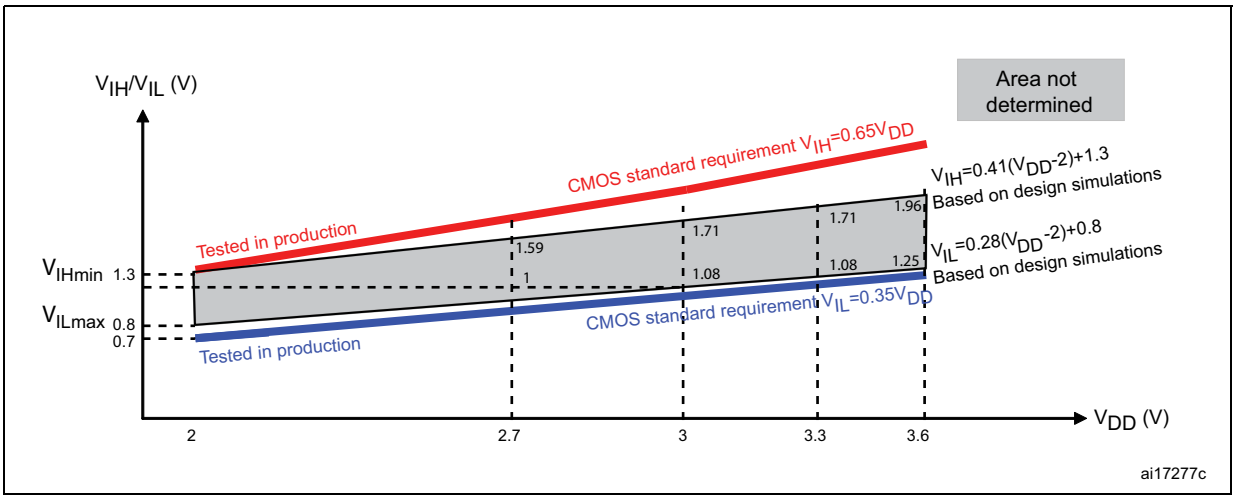

Figure 24. Standard I/O input characteristics - TTL port

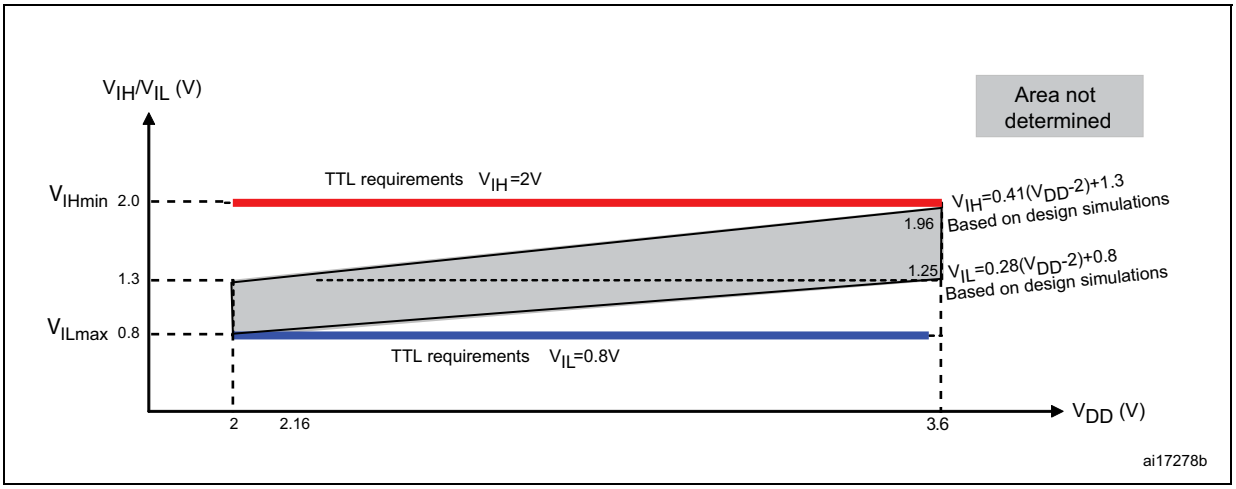

Figure 25. 5 V tolerant I/O input characteristics - CMOS port

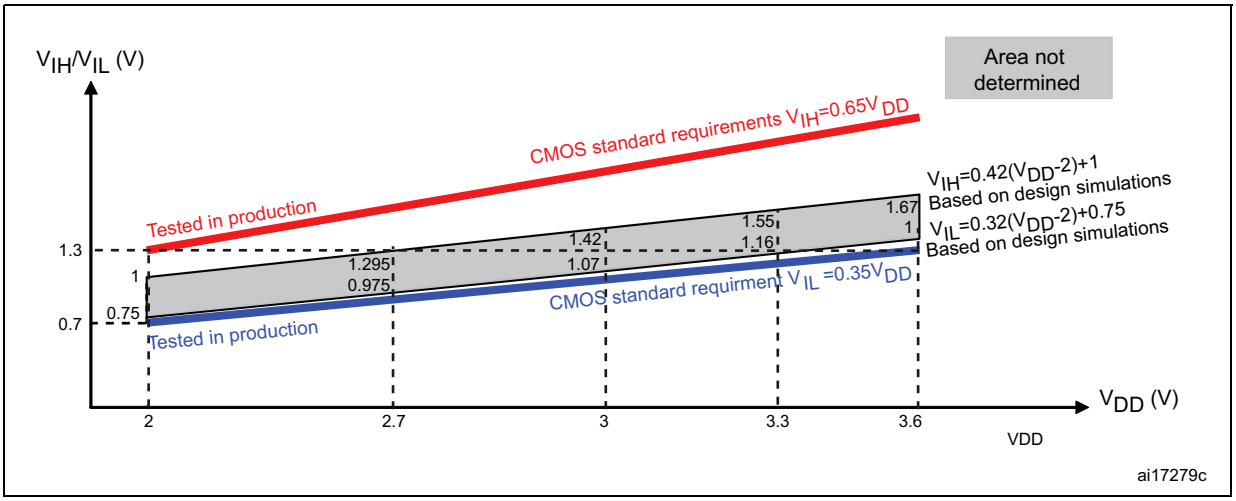

Figure 26. 5 V tolerant I/O input characteristics - TTL port

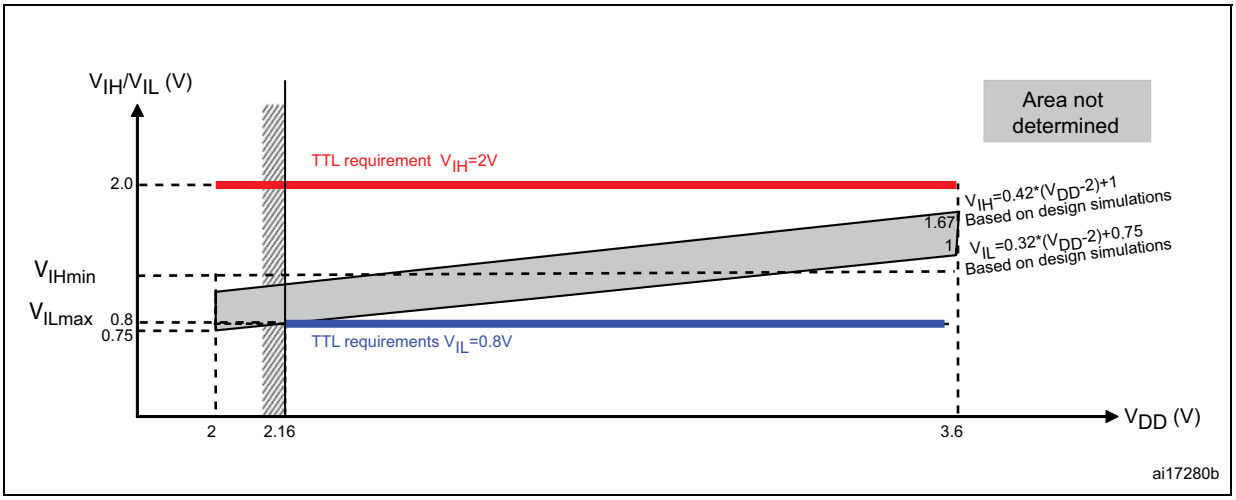

Output driving current

The GPIOs (general-purpose inputs/outputs) can sink or source up to ±8 mA, and sink or source up to ±20 mA (with a relaxed V_{OL}/V_{OH}) except PC13, PC14 and PC15 which can sink or source up to +/-3mA. When using the GPIOs PC13 to PC15 in output mode, the speed should not exceed 2 MHz with a maximum load of 30 pF.

In the user application, the number of I/O pins which can drive current must be limited to respect the absolute maximum rating specified in *Section 5.2*:

- The sum of the currents sourced by all the I/Os on $V_{DD,}$ plus the maximum Run consumption of the MCU sourced on $V_{DD,}$ cannot exceed the absolute maximum rating I_{VDD} (see *Table 6*).
- The sum of the currents sunk by all the I/Os on V_{SS} plus the maximum Run consumption of the MCU sunk on V_{SS} cannot exceed the absolute maximum rating I_{VSS} (see *Table 6*).

Output voltage levels

Unless otherwise specified, the parameters given in *Table 34* are derived from tests performed under the ambient temperature and V_{DD} supply voltage conditions summarized in *Table 8*. All I/Os are CMOS and TTL compliant.

Table 34. Output voltage characteristics

Symbol	Parameter	Conditions	Min	Max	Unit
V_{OL}(1)	Output Low level voltage for an I/O pin when 8 pins are sunk at the same time	CMOS port(2),, I_{IO} = +8 mA, 2.7 V < V_{DD} < 3.6 V	-	0.4	V
V_{OH}(3)	Output High level voltage for an I/O pin when 8 pins are sourced at the same time		V_{DD}–0.4	-	
V_{OL}(1)	Output low level voltage for an I/O pin when 8 pins are sunk at the same time	TTL port(2) I_{IO} = +8 mA 2.7 V < V_{DD} < 3.6 V	-	0.4	V
V_{OH}(3)	Output high level voltage for an I/O pin when 8 pins are sourced at the same time		2.4	-	
V_{OL}(1)	Output low level voltage for an I/O pin when 8 pins are sunk at the same time	I_{IO} = +20 mA(4) 2.7 V < V_{DD} < 3.6 V	-	1.3	V
V_{OH} (3)	Output high level voltage for an I/O pin when 8 pins are sourced at the same time		V_{DD}–1.3	-	
V_{OL}(1)	Output low level voltage for an I/O pin when 8 pins are sunk at the same time	I_{IO} = +6 mA(4) 2 V < V_{DD} < 2.7 V	-	0.4	V
V_{OH}(3)	Output high level voltage for an I/O pin when 8 pins are sourced at the same time		V_{DD}–0.4	-	

1. The I_{IO} current sunk by the device must always respect the absolute maximum rating specified in *Table 6* and the sum of I_{IO} (I/O ports and control pins) must not exceed I_{VSS}.
2. TTL and CMOS outputs are compatible with JEDEC standards JESD36 and JESD52.
3. The I_{IO} current sourced by the device must always respect the absolute maximum rating specified in *Table 6* and the sum of I_{IO} (I/O ports and control pins) must not exceed I_{VDD}.
4. Based on characterization data, not tested in production.

Input/output AC characteristics

The definition and values of input/output AC characteristics are given in *Figure 27* and *Table 35*, respectively.

Unless otherwise specified, the parameters given in *Table 35* are derived from tests performed under the ambient temperature and V_{DD} supply voltage conditions summarized in *Table 8*.

Table 35. I/O AC characteristics(1)

MODEx [1:0] bit value(1)	Symbol	Parameter	Conditions	Max	Unit
10	$f_{max(IO)out}$	Maximum frequency(2)	C_L = 50 pF, V_{DD} = 2 V to 3.6 V	2	MHz
	$t_{f(IO)out}$	Output high to low level fall time	C_L = 50 pF, V_{DD} = 2 V to 3.6 V	125(3)	ns
	$t_{r(IO)out}$	Output low to high level rise time		125(3)	
01	$f_{max(IO)out}$	Maximum frequency(2)	C_L= 50 pF, V_{DD} = 2 V to 3.6 V	10	MHz
	$t_{f(IO)out}$	Output high to low level fall time	C_L= 50 pF, V_{DD} = 2 V to 3.6 V	25(3)	ns
	$t_{r(IO)out}$	Output low to high level rise time		25(3)	
11	$F_{max(IO)out}$	Maximum Frequency(2)	C_L= 30 pF, V_{DD} = 2.7 V to 3.6 V	50	MHz
			C_L = 50 pF, V_{DD} = 2.7 V to 3.6 V	30	MHz
			C_L = 50 pF, V_{DD} = 2 V to 2.7 V	20	MHz
	$t_{f(IO)out}$	Output high to low level fall time	C_L = 30 pF, V_{DD} = 2.7 V to 3.6 V	5(3)	ns
			C_L = 50 pF, V_{DD} = 2.7 V to 3.6 V	8(3)	
			C_L = 50 pF, V_{DD} = 2 V to 2.7 V	12(3)	
	$t_{r(IO)out}$	Output low to high level rise time	C_L = 30 pF, V_{DD} = 2.7 V to 3.6 V	5(3)	
			C_L = 50 pF, V_{DD} = 2.7 V to 3.6 V	8(3)	
			C_L = 50 pF, V_{DD} = 2 V to 2.7 V	12(3)	
-	t_{EXTIpw}	Pulse width of external signals detected by the EXTI controller	-	10	ns

1. The I/O speed is configured using the MODEx[1:0] bits. Refer to the STM32F10xxx reference manual for a description of GPIO Port configuration register.
2. The maximum frequency is defined in *Figure 27*.
3. Guaranteed by design, not tested in production.

Figure 27. I/O AC characteristics definition

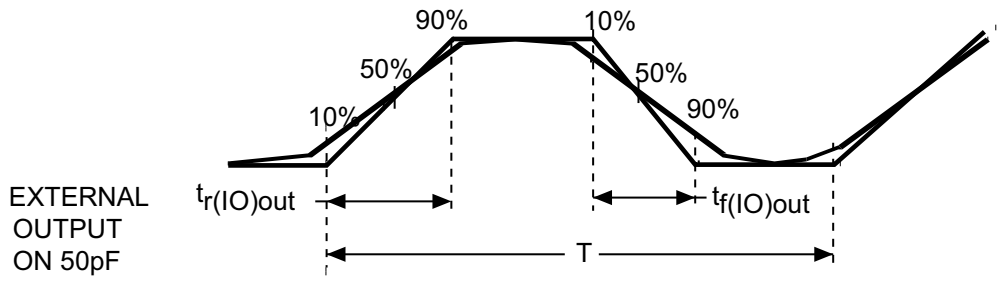

Maximum frequency is achieved if $(t_r + t_f) \leq 2/3)T$ and if the duty cycle is (45-55%) when loaded by 50pF

ai14131

5.3.14 NRST pin characteristics

The NRST pin input driver uses CMOS technology. It is connected to a permanent pull-up resistor, R_{PU} (see *Table 33*).

Unless otherwise specified, the parameters given in *Table 36* are derived from tests performed under the ambient temperature and V_{DD} supply voltage conditions summarized in *Table 8*.

Table 36. NRST pin characteristics

Symbol	Parameter	Conditions	Min	Typ	Max	Unit
$V_{IL(NRST)}$(1)	NRST Input low level voltage	-	–0.5	-	0.8	V
$V_{IH(NRST)}$(1)	NRST Input high level voltage	-	2	-	V_{DD}+0.5	
$V_{hys(NRST)}$	NRST Schmitt trigger voltage hysteresis	-	-	200	-	mV
R_{PU}	Weak pull-up equivalent resistor(2)	$V_{IN} = V_{SS}$	30	40	50	kΩ
$V_{F(NRST)}$(1)	NRST Input filtered pulse	-	-	-	100	ns
$V_{NF(NRST)}$(1)	NRST Input not filtered pulse	-	300	-	-	ns

1. Guaranteed by design, not tested in production.
2. The pull-up is designed with a true resistance in series with a switchable PMOS. This PMOS contribution to the series resistance must be minimum (~10% order).

Figure 28. Recommended NRST pin protection

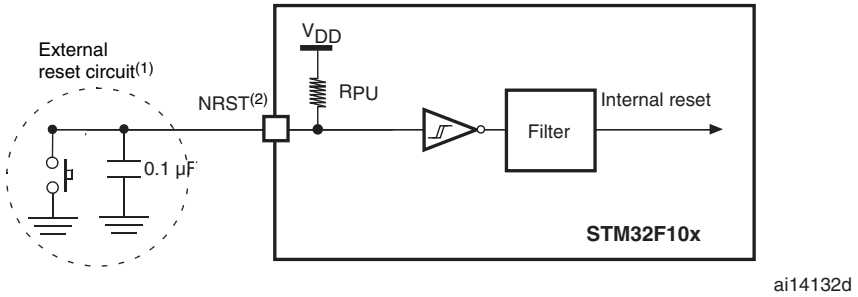

1. The reset network protects the device against parasitic resets.
2. The user must ensure that the level on the NRST pin can go below the $V_{IL(NRST)}$ max level specified in *Table 36*. Otherwise the reset will not be taken into account by the device.

5.3.15 TIM timer characteristics

The parameters given in *Table 37* are guaranteed by design.

Refer to *Section 5.3.12: I/O current injection characteristics* for details on the input/output alternate function characteristics (output compare, input capture, external clock, PWM output).

Table 37. TIMx(1) characteristics

Symbol	Parameter	Conditions	Min	Max	Unit
$t_{res(TIM)}$	Timer resolution time	-	1	-	$t_{TIMxCLK}$
		$f_{TIMxCLK}$ = 36 MHz	27.8	-	ns
f_{EXT}	Timer external clock frequency on CH1 to CH4		0	$f_{TIMxCLK}/2$	MHz
		$f_{TIMxCLK}$ = 36 MHz	0	18	MHz
Res_{TIM}	Timer resolution	-	-	16	bit
$t_{COUNTER}$	16-bit counter clock period when internal clock is selected	-	1	65536	$t_{TIMxCLK}$
		$f_{TIMxCLK}$ = 36 MHz	0.0278	1820	µs
t_{MAX_COUNT}	Maximum possible count	-	-	65536 × 65536	$t_{TIMxCLK}$
		$f_{TIMxCLK}$ = 36 MHz	-	119.2	s

1. TIMx is used as a general term to refer to the TIM1, TIM2, TIM3 and TIM4 timers.

5.3.16 Communications interfaces

I²C interface characteristics

The STM32F101xx medium-density access line I²C interface meets the requirements of the standard I²C communication protocol with the following restrictions: the I/O pins SDA and SCL are mapped to are not “true” open-drain. When configured as open-drain, the PMOS connected between the I/O pin and V_{DD} is disabled, but is still present.

The I²C characteristics are described in *Table 38*. Refer also to *Section 5.3.12: I/O current injection characteristics* for more details on the input/output alternate function characteristics (SDA and SCL).

Table 38. I^2C characteristics

Symbol	Parameter	Standard mode I^2C(1)		Fast mode I^2C(1)(2)		Unit
		Min	Max	Min	Max	
$t_{w(SCLL)}$	SCL clock low time	4.7	-	1.3	-	µs
$t_{w(SCLH)}$	SCL clock high time	4.0	-	0.6	-	
$t_{su(SDA)}$	SDA setup time	250	-	100	-	ns
$t_{h(SDA)}$	SDA data hold time	0	-	0	900(3)	
$t_{r(SDA)}$ $t_{r(SCL)}$	SDA and SCL rise time	-	1000	$20+0.1C_b$	300	
$t_{f(SDA)}$ $t_{f(SCL)}$	SDA and SCL fall time	-	300	-	300	
$t_{h(STA)}$	Start condition hold time	4.0	-	0.6	-	µs
$t_{su(STA)}$	Repeated Start condition setup time	4.7	-	0.6	-	
$t_{su(STO)}$	Stop condition setup time	4.0	-	0.6	-	µs
$t_{w(STO:STA)}$	Stop to Start condition time (bus free)	4.7	-	1.3	-	µs
C_b	Capacitive load for each bus line	-	400	-	400	pF

1. Guaranteed by design, not tested in production.
2. f_{PCLK1} must be at least 2 MHz to achieve standard mode I^2C frequencies. It must be at least 4 MHz to achieve fast mode I^2C frequencies. It must be a multiple of 10 MHz to reach the 400 kHz maximum I2C fast mode clock.
3. The maximum Data hold time has only to be met if the interface does not stretch the low period of SCL signal.

Figure 29. I²C bus AC waveforms and measurement circuit(1)

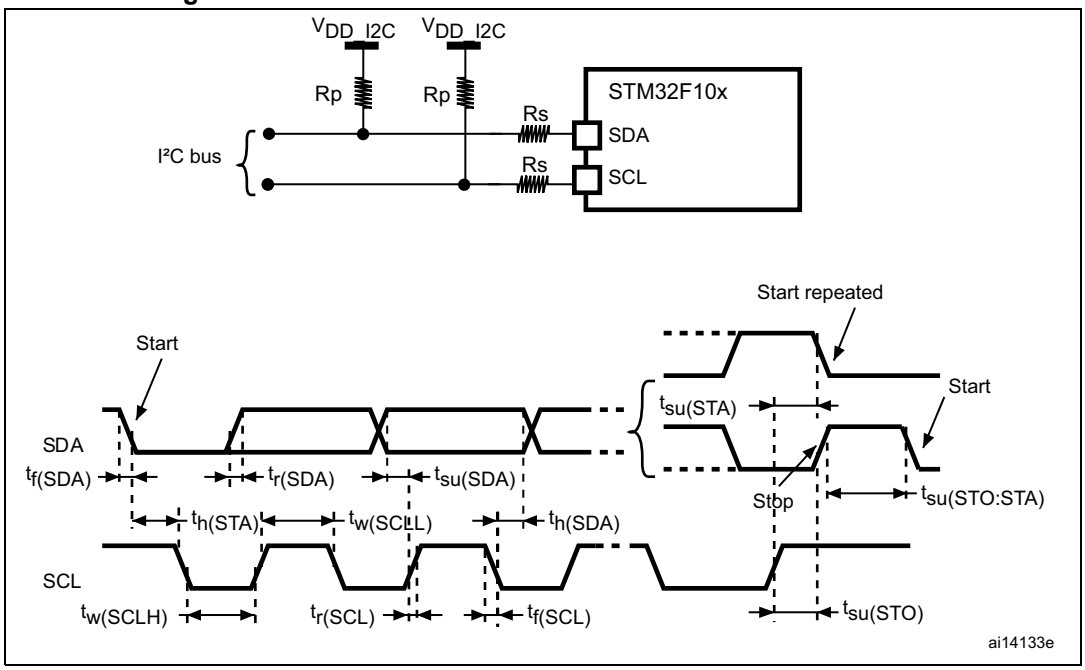

1. Measurement points are done at CMOS levels: $0.3V_{DD}$ and $0.7V_{DD}$.
2. Rs = Series protection resistors, Rp = Pull-up resistors, V_{DD_I2C} = I2C bus supply.

Table 39. SCL frequency (f_{PCLK1}= 36 MHz, V_{DD_I2C} = 3.3 V)(1)(2)

f_{SCL} (kHz)	I2C_CCR value
	R_P = 4.7 kΩ
400	0x801E
300	0x8028
200	0x803C
100	0x00B4
50	0x0168
20	0x0384

1. R_P = External pull-up resistance, f_{SCL} = I²C speed,
2. For speeds around 200 kHz, the tolerance on the achieved speed is of ±5%. For other speed ranges, the tolerance on the achieved speed ±2%. These variations depend on the accuracy of the external components used to design the application.

SPI interface characteristics

Unless otherwise specified, the parameters given in *Table 40* are derived from tests performed under the ambient temperature, f_{PCLKx} frequency and V_{DD} supply voltage conditions summarized in *Table 8*.

Refer to *Section 5.3.12: I/O current injection characteristics* for more details on the input/output alternate function characteristics (NSS, SCK, MOSI, MISO).

Table 40. SPI characteristics

Symbol	Parameter	Conditions	Min	Max	Unit
f_{SCK} $1/t_{c(SCK)}$	SPI clock frequency	Master mode	0	18	MHz
		Slave mode	0	18	
$t_{r(SCK)}$ $t_{f(SCK)}$	SPI clock rise and fall time	Capacitive load: C = 30 pF		8	ns
$t_{su(NSS)}$(1)	NSS setup time	Slave mode	4 t_{PCLK}	-	
$t_{h(NSS)}$(1)	NSS hold time	Slave mode	73	-	
$t_{w(SCKH)}$(1) $t_{w(SCKL)}$(1)	SCK high and low time	Master mode, f_{PCLK} = 36 MHz, presc = 4	50	60	
$t_{su(MI)}$ (1)	Data input setup time Master mode	SPI1	1	-	
		SPI2	5	-	
$t_{su(SI)}$(1)	Data input setup time Slave mode	-	1	-	
$t_{h(MI)}$ (1)	Data input hold time Master mode	SPI1	1	-	
		SPI2	5	-	
$t_{h(SI)}$(1)	Data input hold time Slave mode	-	3	-	
$t_{a(SO)}$(1)(2)	Data output access time	Slave mode, f_{PCLK} = 36 MHz, presc = 4	0	55	
		Slave mode, f_{PCLK} = 24 MHz	0	4 t_{PCLK}	
$t_{dis(SO)}$(1)(3)	Data output disable time	Slave mode	10		
$t_{v(SO)}$ (1)	Data output valid time	Slave mode (after enable edge)	-	25	
$t_{v(MO)}$(1)	Data output valid time	Master mode (after enable edge)	-	3	
$t_{h(SO)}$(1)	Data output hold time	Slave mode (after enable edge)	25	-	
$t_{h(MO)}$(1)		Master mode (after enable edge)	4	-	

1. Based on characterization, not tested in production.
2. Min time is for the minimum time to drive the output and the max time is for the maximum time to validate the data.
3. Min time is for the minimum time to invalidate the output and the max time is for the maximum time to put the data in Hi-Z

Figure 30. SPI timing diagram - slave mode and CPHA = 0

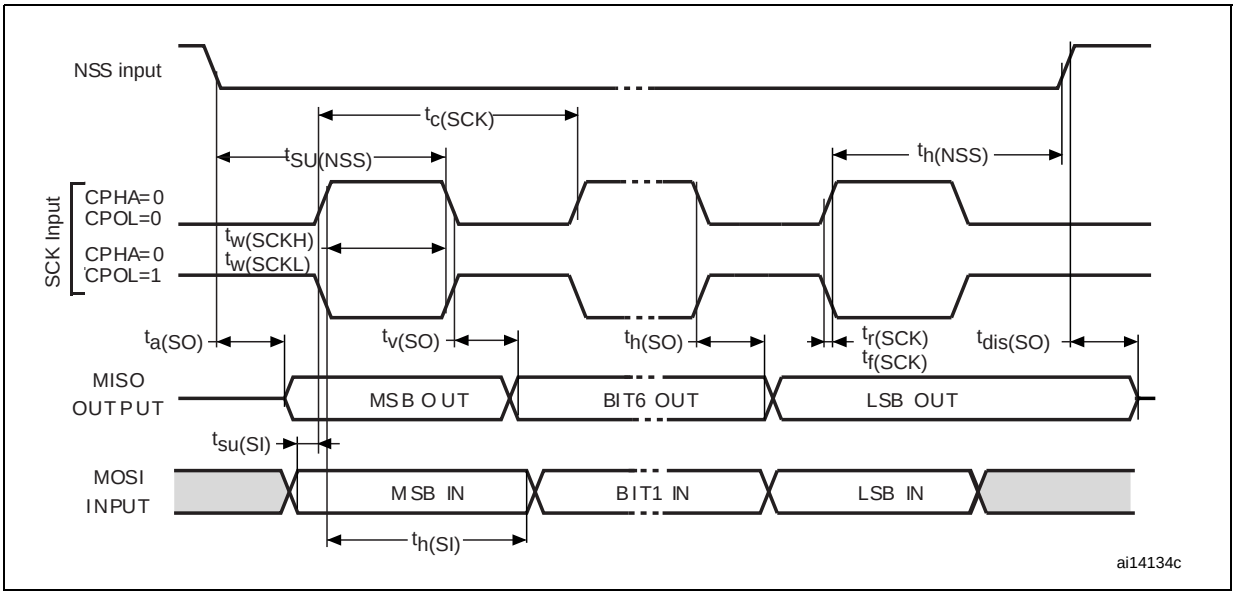

Figure 31. SPI timing diagram - slave mode and CPHA = 1[(1)]

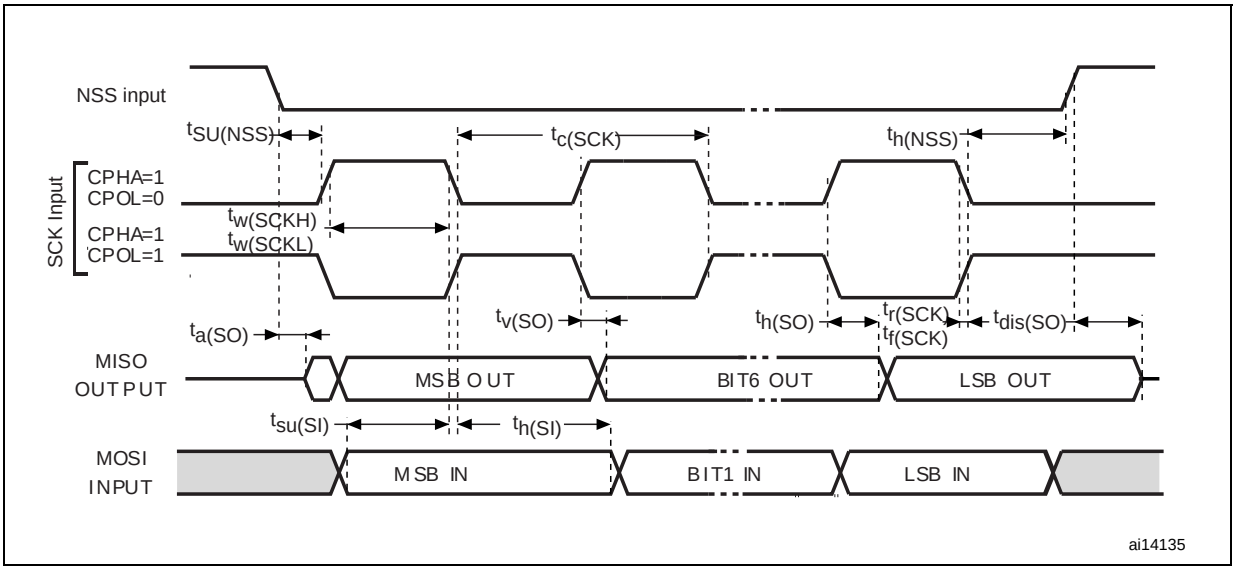

1. Measurement points are done at CMOS levels: $0.3V_{DD}$ and $0.7V_{DD}$.

Figure 32. SPI timing diagram - master mode(1)

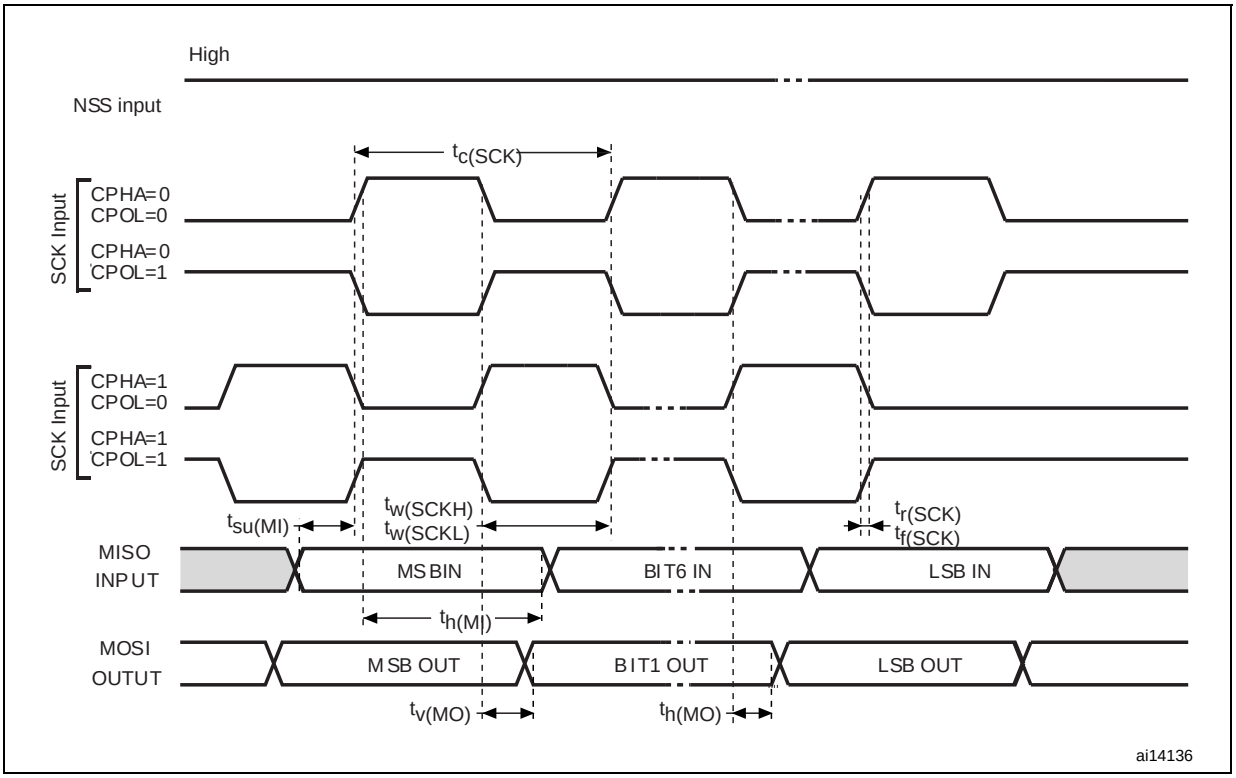

1. Measurement points are done at CMOS levels: $0.3V_{DD}$ and $0.7V_{DD}$.

5.3.17 12-bit ADC characteristics

Unless otherwise specified, the parameters given in *Table 41* are derived from tests performed under the ambient temperature, f_{PCLK2} frequency and V_{DDA} supply voltage conditions summarized in *Table 8*.

Note: It is recommended to perform a calibration after each power-up.

Table 41. ADC characteristics

Symbol	Parameter	Conditions	Min	Typ	Max	Unit
V_{DDA}	Power supply	-	2.4	-	3.6	V
V_{REF+}	Positive reference voltage	-	2.4	-	V_{DDA}	V
I_{VREF}	Current on the V_{REF} input pin	-	-	160(1)	220(1)	µA
f_{ADC}	ADC clock frequency	-	0.6	-	14	MHz
f_S(2)	Sampling rate	-	0.05	-	1	MHz
f_{TRIG}(2)	External trigger frequency	f_{ADC} = 14 MHz	-	-	823	kHz
		-	-	-	17	$1/f_{ADC}$
V_{AIN}	Conversion voltage range(3)	-	0 (V_{SSA} or V_{REF-} tied to ground)	-	V_{REF+}	V
R_{AIN}(2)	External input impedance	See *Equation 1* and *Table 42* for details	-	-	50	κΩ
R_{ADC}(2)	Sampling switch resistance	-	-	-	1	κΩ
C_{ADC}(2)	Internal sample and hold capacitor	-	-	-	8	pF
t_{CAL}(2)	Calibration time	f_{ADC} = 14 MHz	5.9			µs
		-	83			$1/f_{ADC}$
t_{lat}(2)	Injection trigger conversion latency	f_{ADC} = 14 MHz	-	-	0.214	µs
		-	-	-	3(4)	$1/f_{ADC}$
t_{latr}(2)	Regular trigger conversion latency	f_{ADC} = 14 MHz	-	-	0.143	µs
		-	-	-	2(4)	$1/f_{ADC}$
t_S(2)	Sampling time	f_{ADC} = 14 MHz	0.107	-	17.1	µs
			1.5	-	239.5	$1/f_{ADC}$
t_{STAB}(2)	Power-up time	-	0	0	1	µs
t_{CONV}(2)	Total conversion time (including sampling time)	f_{ADC} = 14 MHz	1	-	18	µs
		-	14 to 252 (t_S for sampling +12.5 for successive approximation)			$1/f_{ADC}$

1. Based on characterization results, not tested in production.
2. Guaranteed by design, not tested in production.
3. V_{REF+} can be internally connected to V_{DDA} and V_{REF-} can be internally connected to V_{SSA}, depending on the package. Refer to *Section 3: Pinouts and pin description* for further details.
4. For external triggers, a delay of $1/f_{PCLK2}$ must be added to the latency specified in *Table 41*.

Equation 1: R_{AIN} max formula:

$$R_{AIN} < \frac{T_S}{f_{ADC} \times C_{ADC} \times \ln(2^{N+2})} - R_{ADC}$$

The formula above (*Equation 1*) is used to determine the maximum external impedance allowed for an error below 1/4 of LSB. Here N = 12 (from 12-bit resolution).

Table 42. R_{AIN} max for f_{ADC} = 14 MHz(1)

T_s (cycles)	t_S (µs)	R_{AIN} max (kΩ)
1.5	0.11	0.4
7.5	0.54	5.9
13.5	0.96	11.4
28.5	2.04	25.2
41.5	2.96	37.2
55.5	3.96	50
71.5	5.11	NA
239.5	17.1	NA

1. Guaranteed by design, not tested in production.

Table 43. ADC accuracy - limited test conditions(1) (2)

Symbol	Parameter	Test conditions	Typ	Max(3)	Unit
ET	Total unadjusted error	f_{PCLK2} = 28 MHz, f_{ADC} = 14 MHz, R_{AIN} < 10 kΩ, V_{DDA} = 3 V to 3.6 V T_A = 25 °C Measurements made after ADC calibration	±1.3	±2	LSB
EO	Offset error		±1	±1.5	
EG	Gain error		±0.5	±1.5	
ED	Differential linearity error		±0.7	±1	
EL	Integral linearity error		±0.8	±1.5	

1. ADC DC accuracy values are measured after internal calibration.
2. ADC Accuracy vs. Negative Injection Current: Injecting negative current on any analog input pins should be avoided as this significantly reduces the accuracy of the conversion being performed on another analog input. It is recommended to add a Schottky diode (pin to ground) to analog pins which may potentially inject negative current.
Any positive injection current within the limits specified for $I_{INJ(PIN)}$ and $\Sigma I_{INJ(PIN)}$ in *Section 5.3.12* does not affect the ADC accuracy.
3. Based on characterization, not tested in production.

Table 44. ADC accuracy(1) (2) (3)

Symbol	Parameter	Test conditions	Typ	Max(4)	Unit
ET	Total unadjusted error	f_{PCLK2} = 28 MHz, f_{ADC} = 14 MHz, R_{AIN} < 10 kΩ, V_{DDA} = 2.4 V to 3.6 V Measurements made after ADC calibration	±2	±5	LSB
EO	Offset error		±1.5	±2.5	
EG	Gain error		±1.5	±3	
ED	Differential linearity error		±1	±2	
EL	Integral linearity error		±1.5	±3	

1. ADC DC accuracy values are measured after internal calibration.
2. Better performance could be achieved in restricted V_{DD}, frequency, V_{REF} and temperature ranges.
3. ADC Accuracy vs. Negative Injection Current: Injecting negative current on any of the standard (non-robust) analog input pins should be avoided as this significantly reduces the accuracy of the conversion being performed on another analog input. It is recommended to add a Schottky diode (pin to ground) to standard analog pins which may potentially inject negative current.
Any positive injection current within the limits specified for $I_{INJ(PIN)}$ and $\Sigma I_{INJ(PIN)}$ in *Section 5.3.12* does not affect the ADC accuracy.
4. Based on characterization, not tested in production.

Figure 33. ADC accuracy characteristics

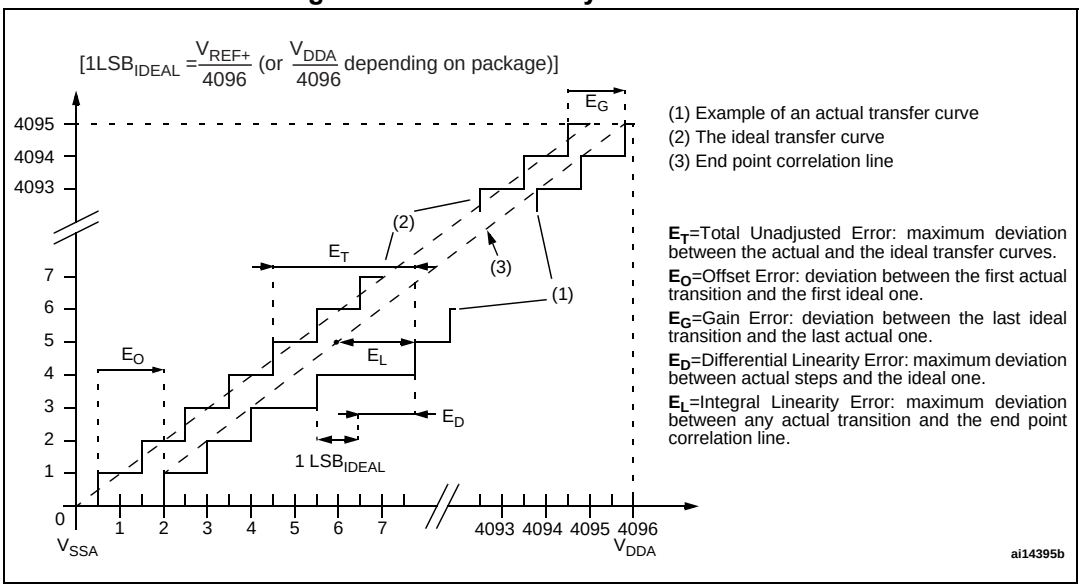

Figure 34. Typical connection diagram using the ADC

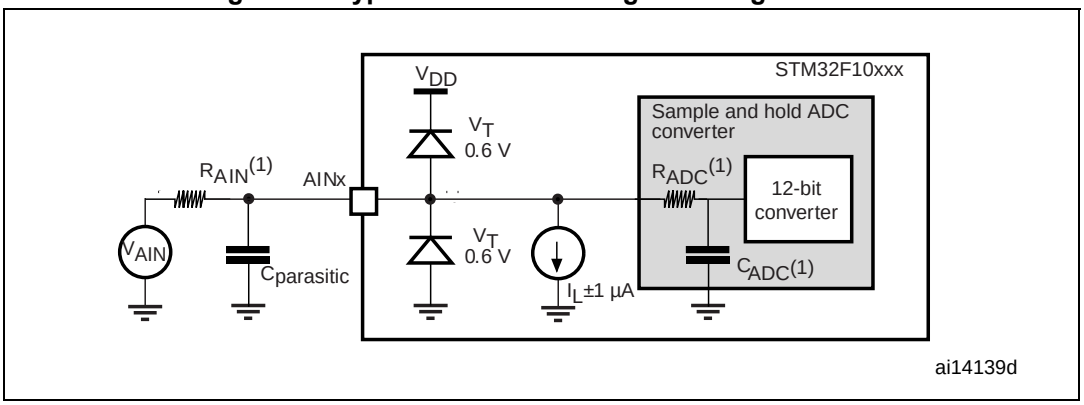

1. Refer to *Table 41* for the values of R_{AIN}, R_{ADC} and C_{ADC}.
2. $C_{parasitic}$ represents the capacitance of the PCB (dependent on soldering and PCB layout quality) plus the pad capacitance (roughly 7 pF). A high $C_{parasitic}$ value will downgrade conversion accuracy. To remedy this, f_{ADC} should be reduced.

General PCB design guidelines

Power supply decoupling should be performed as shown in *Figure 35* or *Figure 36*, depending on whether V_{REF+} is connected to V_{DDA} or not. The 10 nF capacitors should be ceramic (good quality). They should be placed them as close as possible to the chip.

Figure 35. Power supply and reference decoupling (V_{REF+} not connected to V_{DDA})

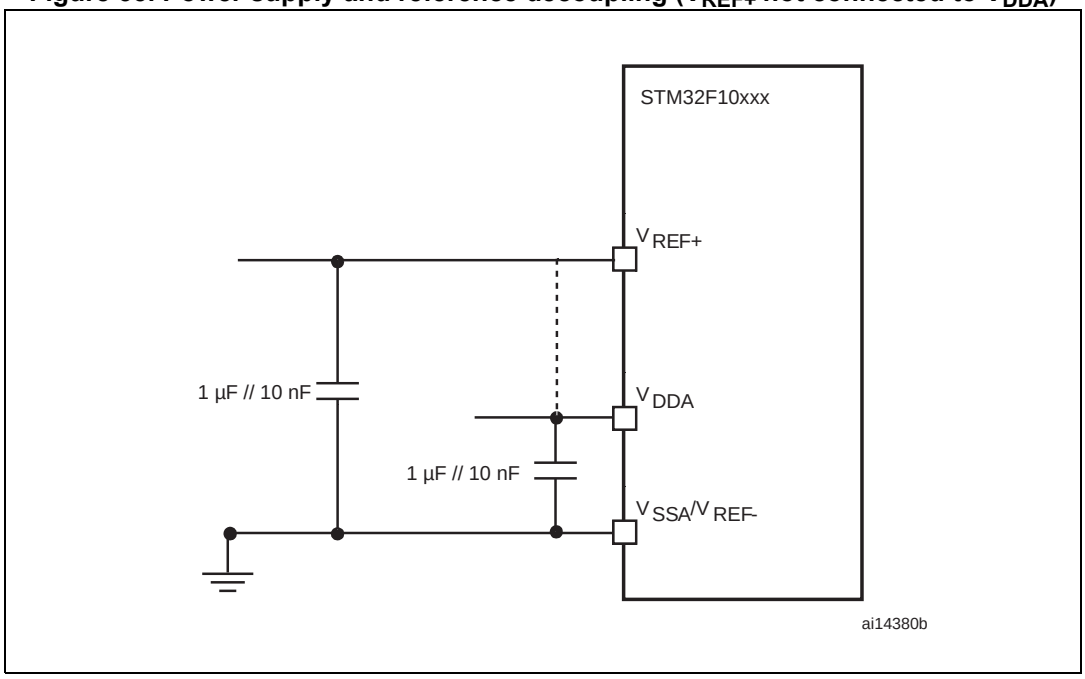

1. V_{REF+} and V_{REF-} inputs are available only on 100-pin packages.

Figure 36. Power supply and reference decoupling (V_{REF+} connected to V_{DDA})

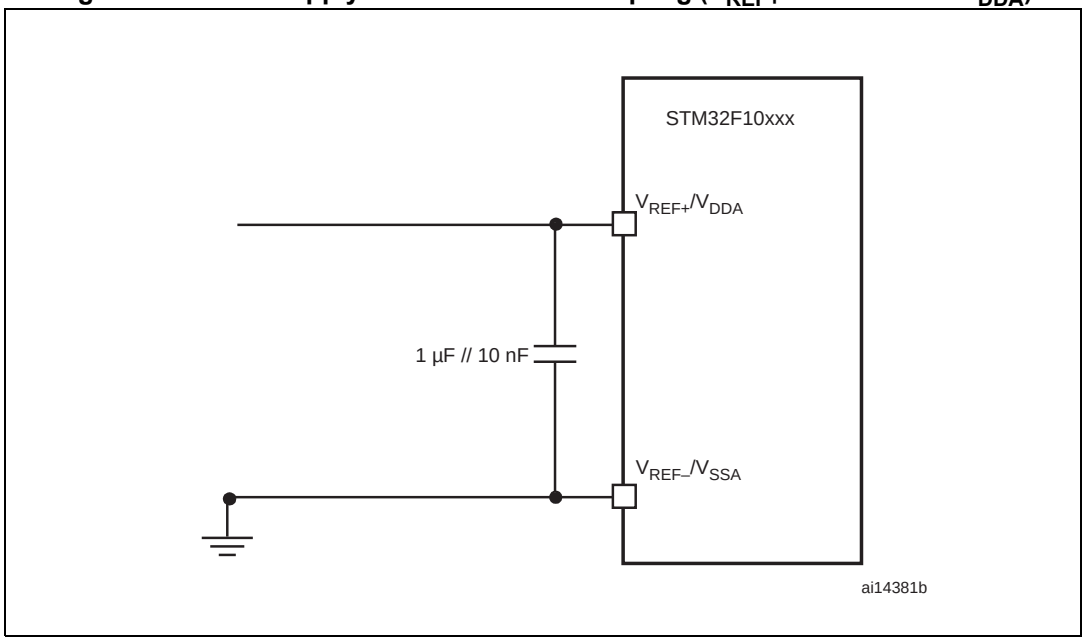

1. V_{REF+} and V_{REF-} inputs are available only on 100-pin packages.

5.3.18 Temperature sensor characteristics

Table 45. TS characteristics

Symbol	Parameter	Min	Typ	Max	Unit
T_L(1)	V_{SENSE} linearity with temperature	-	±1	±2	°C
Avg_Slope(1)	Average slope	4.0	4.3	4.6	mV/°C
V_{25}(1)	Voltage at 25°C	1.34	1.43	1.52	V
t_{START}(2)	Startup time	4	-	10	µs
T_{S_temp}(3)(2)	ADC sampling time when reading the temperature	-	-	17.1	µs

1. Guaranteed by characterization, not tested in production.
2. Guaranteed by design, not tested in production.
3. Shortest sampling time can be determined in the application by multiple iterations.

6 Package characteristics

6.1 Package mechanical data

In order to meet environmental requirements, ST offers these devices in different grades of ECOPACK® packages, depending on their level of environmental compliance. ECOPACK® specifications, grade definitions and product status are available at: *www.st.com*. ECOPACK® is an ST trademark.

6.2 UFQFPN48 package information

Figure 37. UFQFPN48 7 x 7 mm, 0.5 mm pitch, package outline

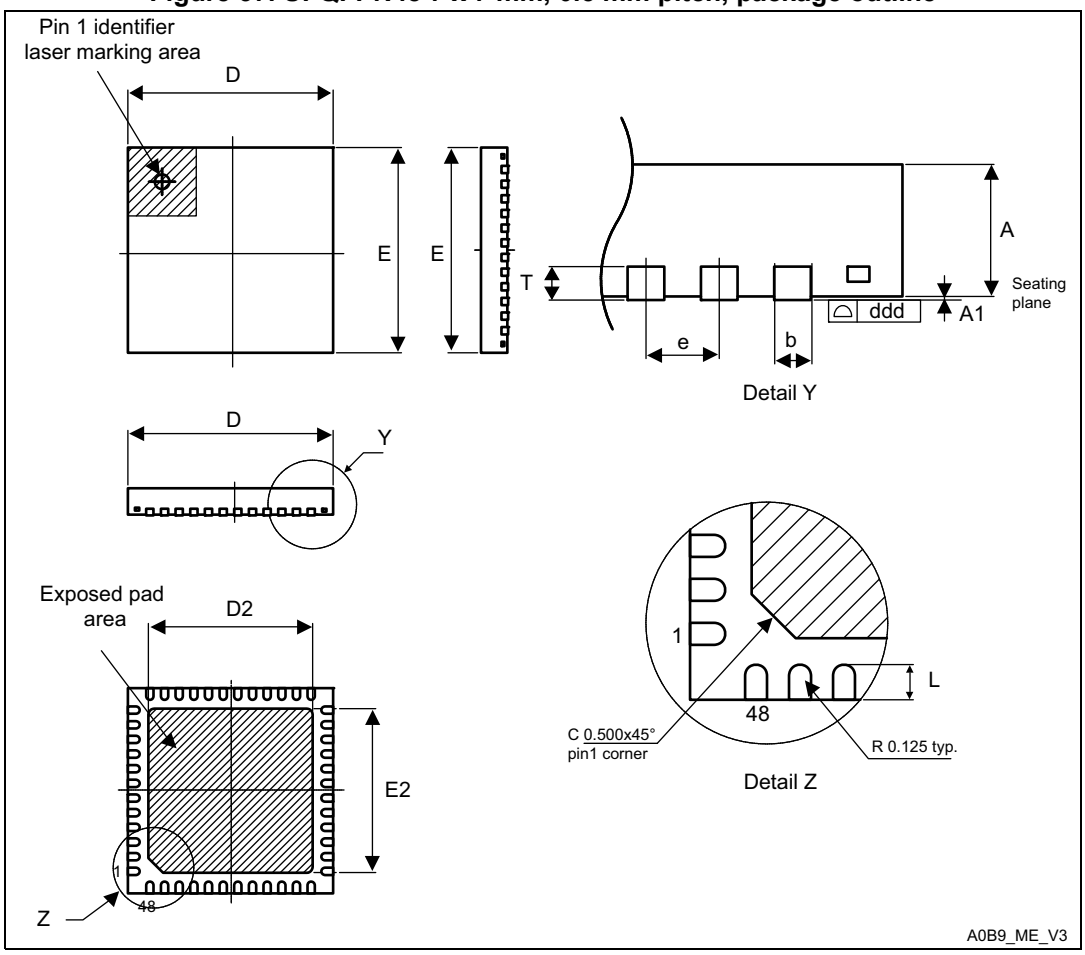

1. Drawing is not to scale.
2. There is an exposed die pad on the underside of the QFPN package, this pad is not internally connected to the VSS or VDD power pads. It is recommended to connect it to VSS.
3. All leads/pads should also be soldered to the PCB to improve the lead solder joint life.

Table 46. UFQFPN48 - 48-lead, 7x7 mm, 0.5 mm pitch, ultra thin fine pitch quad flat package mechanical data

Symbol	millimeters			inches[1]		
	Min	Typ	Max	Min	Typ	Max
A	0.500	0.550	0.600	0.0197	0.0217	0.0236
A1	0.000	0.020	0.050	0.0000	0.0008	0.0020
D	6.900	7.000	7.100	0.2717	0.2756	0.2795
E	6.900	7.000	7.100	0.2717	0.2756	0.2795
D2	5.500	5.600	5.700	0.2165	0.2205	0.2244
E2	5.500	5.600	5.700	0.2165	0.2205	0.2244
L	0.300	0.400	0.500	0.0118	0.0157	0.0197
T	-	0.152	-	-	0.0060	-
b	0.200	0.250	0.300	0.0079	0.0098	0.0118
e	-	0.500	-	-	0.0197	-
ddd	-	-	0.080	-	-	0.0031

1. Values in inches are converted from mm and rounded to 4 decimal digits.

Figure 38. UFQFPN48 recommended footprint

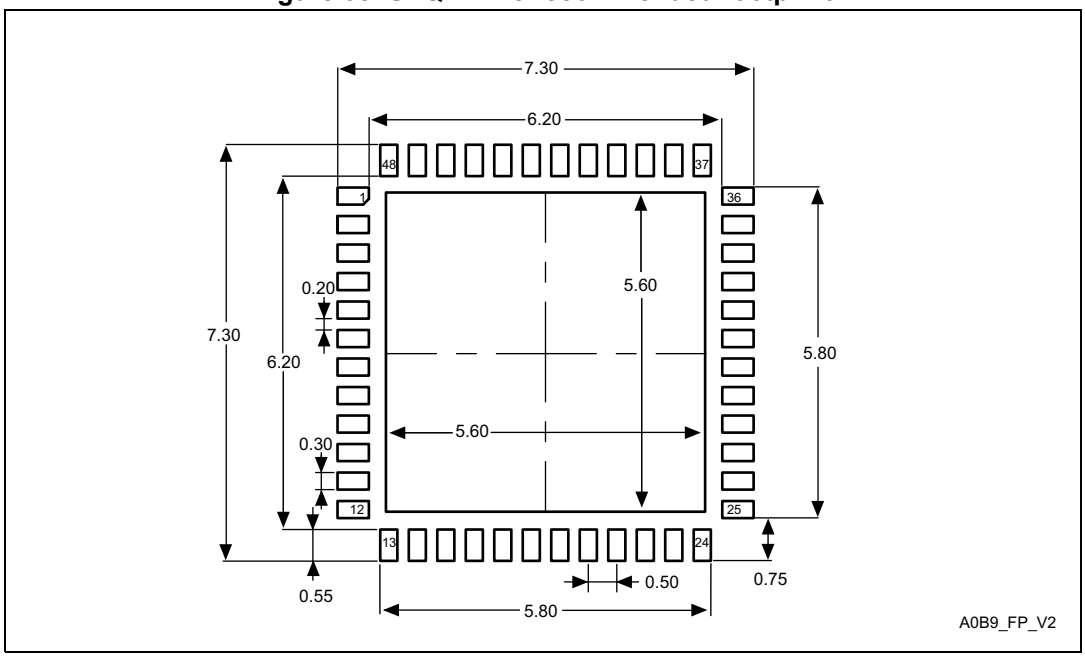

1. Dimensions are expressed in millimeters.

Device Marking for UFQFPN48

The following figure gives an example of topside marking orientation versus pin 1 identifier location.

Figure 39. UFQFPN48 marking example (package top view)

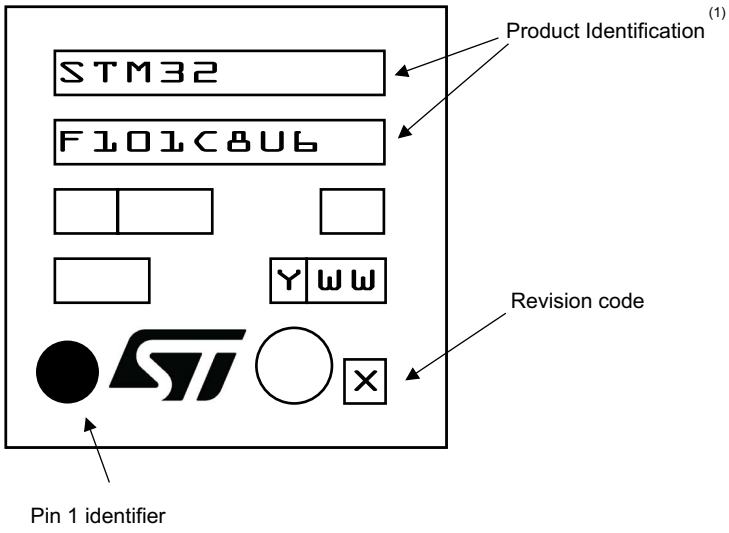

1. Parts marked as “ES”,”E” or accompanied by an Engineering Sample notification letter, are not yet qualified and therefore not yet ready to be used in production and any consequences deriving from such usage will not be at ST charge. In no event, ST will be liable for any customer usage of these engineering samples in production. ST Quality has to be contacted prior to any decision to use these Engineering Samples to run qualification activity.

6.3 VFQFPN36 package information

Figure 40. VFQFPN36 - 36-pin, 6x6 mm, 0.5 mm pitch very thin profile fine pitch quad flat package outline

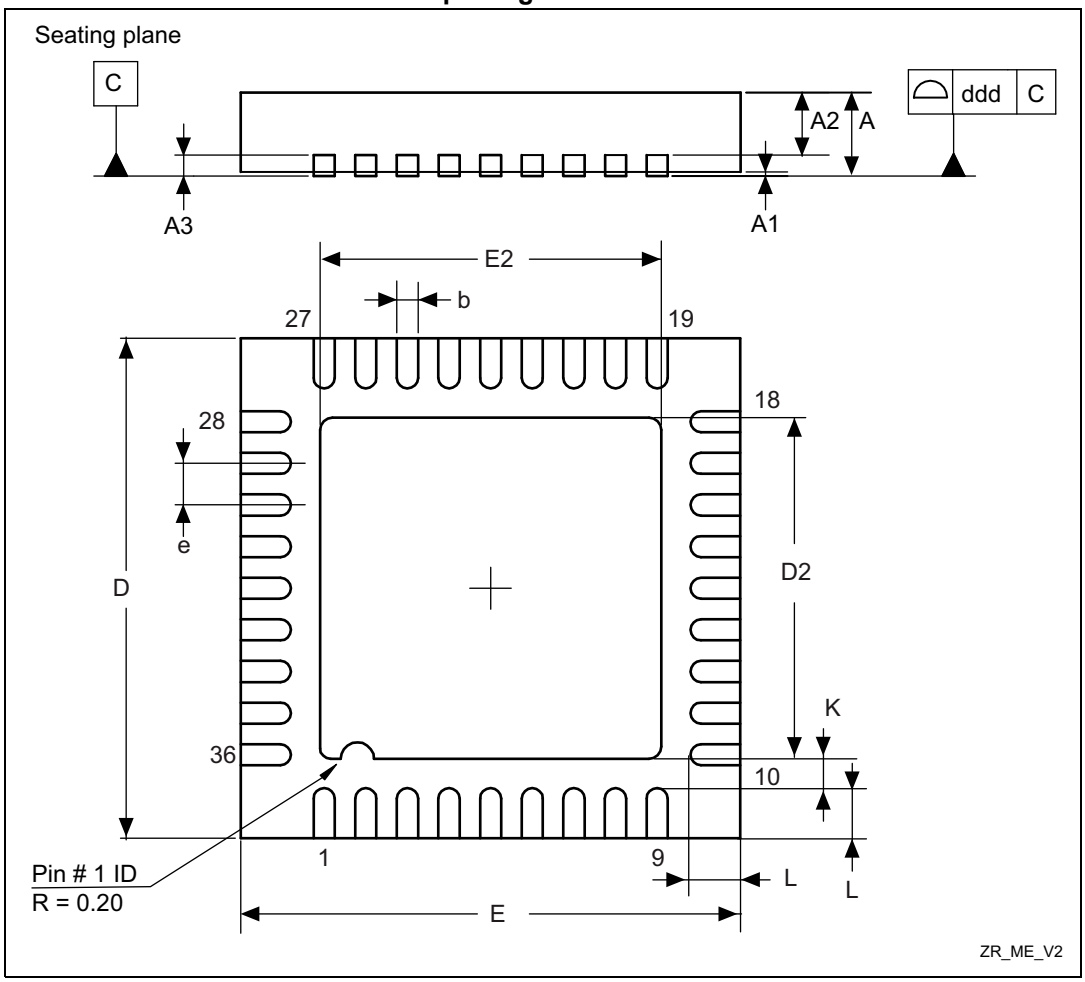

1. Drawing is not to scale.

Table 47. VFQFPN36 - 36-pin, 6x6 mm, 0.5 mm pitch very thin profile fine pitch quad flat package mechanical data

Symbol	millimeters			inches[1]		
	Min	Typ	Max	Min	Typ	Max
A	0.800	0.900	1.000	0.0315	0.0354	0.0394
A1	-	0.020	0.050	-	0.0008	0.0020
A2	-	0.650	1.000	-	0.0256	0.0394
A3	-	0.200	-	-	0.0079	-
b	0.180	0.230	0.300	0.0071	0.0091	0.0118
D	5.875	6.000	6.125	0.2313	0.2362	0.2411
D2	1.750	3.700	4.250	0.0689	0.1457	0.1673
E	5.875	6.000	6.125	0.2313	0.2362	0.2411
E2	1.750	3.700	4.250	0.0689	0.1457	0.1673
e	0.450	0.500	0.550	0.0177	0.0197	0.0217
L	0.350	0.550	0.750	0.0138	0.0217	0.0295
K	0.250	-	-	0.0098	-	-
ddd	-	-	0.080	-	-	0.0031

1. Values in inches are converted from mm and rounded to 4 decimal digits.

Figure 41. VFQFPN36 - 36-pin, 6x6 mm, 0.5 mm pitch very thin profile fine pitch quad flat package recommended footprint

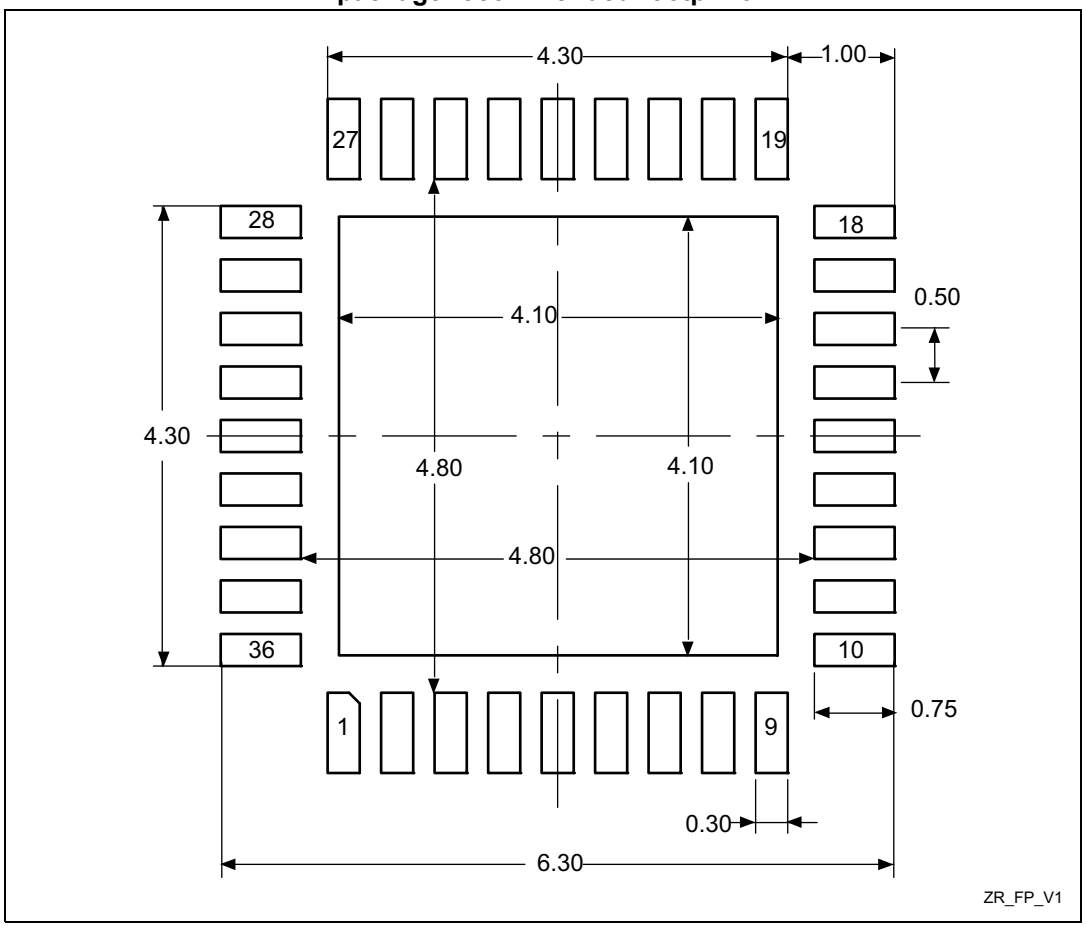

1. Dimensions are expressed in millimeters.

Device Marking for VFQFPN36

The following figure gives an example of topside marking orientation versus pin 1 identifier location.

Figure 42. VFQFPN36 marking example (package top view)

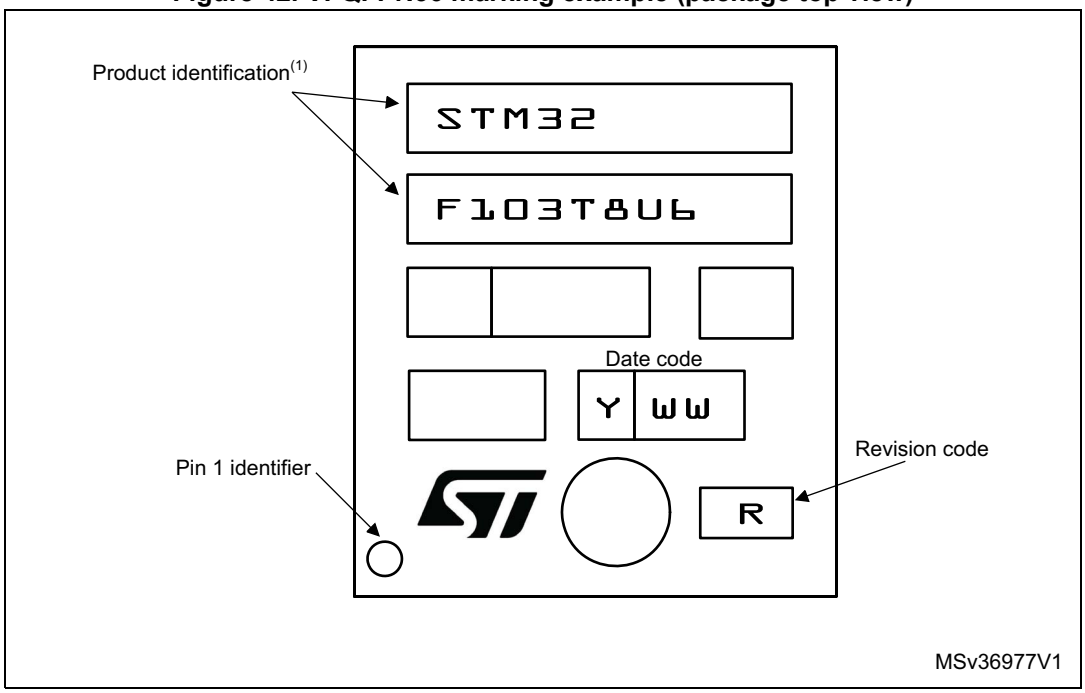

1. Parts marked as “ES”,”E” or accompanied by an Engineering Sample notification letter, are not yet qualified and therefore not yet ready to be used in production and any consequences deriving from such usage will not be at ST charge. In no event, ST will be liable for any customer usage of these engineering samples in production. ST Quality has to be contacted prior to any decision to use these Engineering Samples to run qualification activity.

6.4 LQFP100 package information

Figure 43. LQFP100 - 100-pin, 14 x 14 mm low-profile quad flat package outline

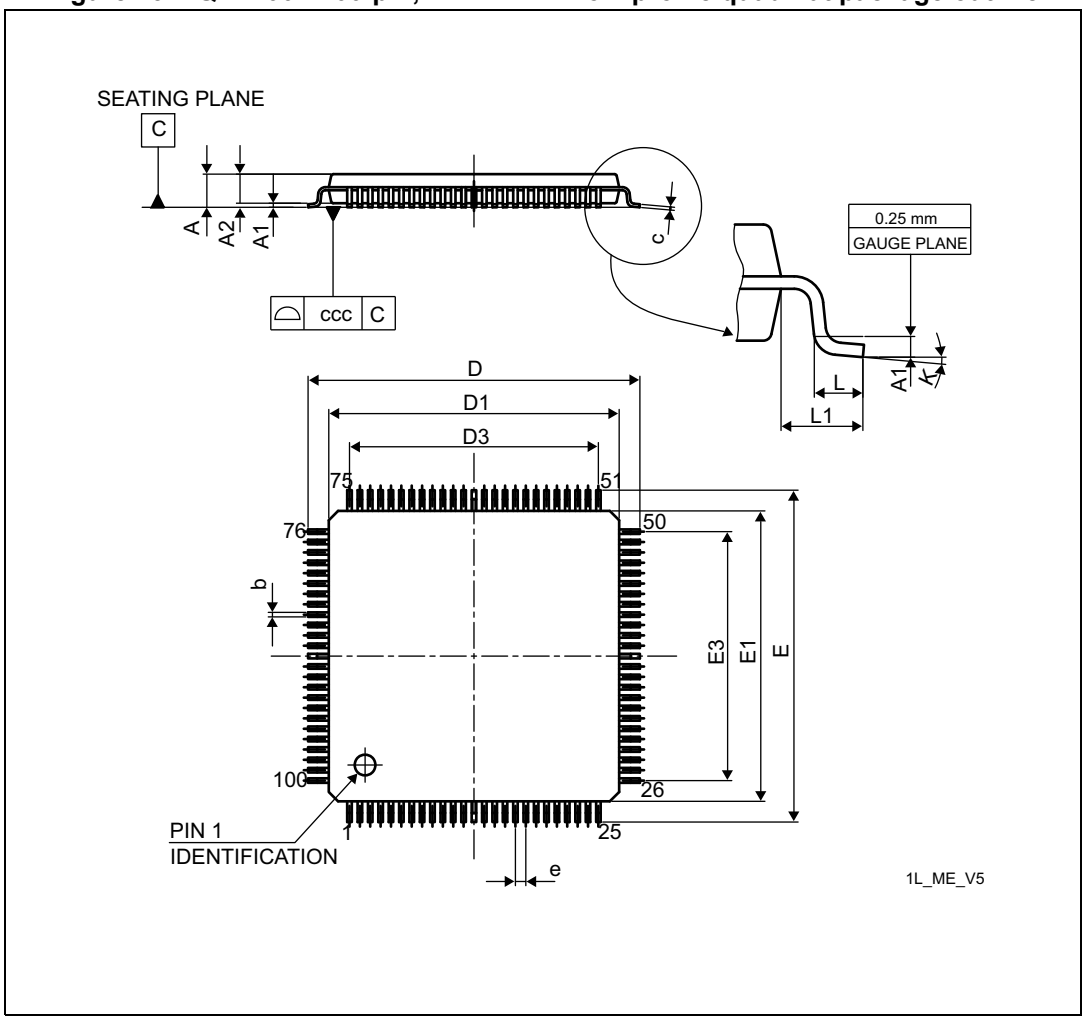

1. Drawing is not to scale.

Table 48. LQPF100 - 100-pin, 14 x 14 mm low-profile quad flat package mechanical data

Symbol	millimeters			inches(1)		
	Min	Typ	Max	Min	Typ	Max
A	-	-	1.600	-	-	0.0630
A1	0.050	-	0.150	0.0020	-	0.0059
A2	1.350	1.400	1.450	0.0531	0.0551	0.0571
b	0.170	0.220	0.270	0.0067	0.0087	0.0106
c	0.090	-	0.200	0.0035	-	0.0079
D	15.800	16.000	16.200	0.6220	0.6299	0.6378
D1	13.800	14.000	14.200	0.5433	0.5512	0.5591

Table 48. LQPF100 - 100-pin, 14 x 14 mm low-profile quad flat package mechanical data (continued)

Symbol	millimeters			inches[1]		
	Min	Typ	Max	Min	Typ	Max
D3	-	12.000	-	-	0.4724	-
E	15.800	16.000	16.200	0.6220	0.6299	0.6378
E1	13.800	14.000	14.200	0.5433	0.5512	0.5591
E3	-	12.000	-	-	0.4724	-
e	-	0.500	-	-	0.0197	-
L	0.450	0.600	0.750	0.0177	0.0236	0.0295
L1	-	1.000	-	-	0.0394	-
k	0.0°	3.5°	7.0°	0.0°	3.5°	7.0°
ccc	-	-	0.080	-	-	0.0031

1. Values in inches are converted from mm and rounded to 4 decimal digits.

Figure 44. LQFP100 - 100-pin, 14 x 14 mm low-profile quad flat recommended footprint

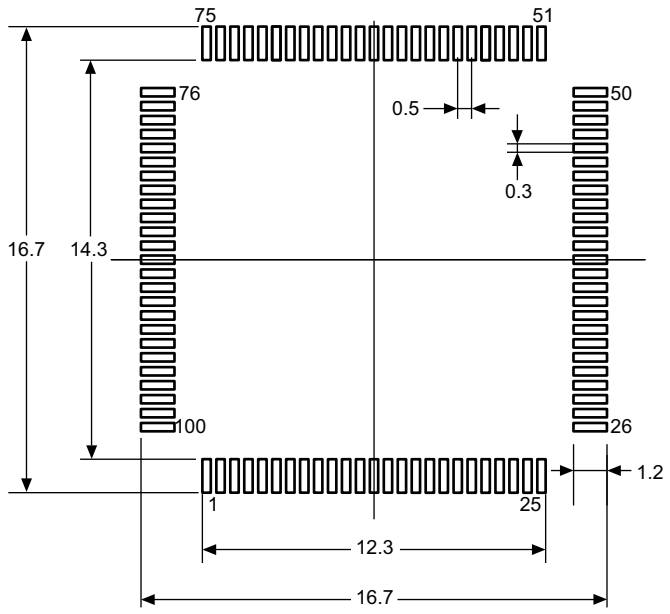

1. Dimensions are expressed in millimeters.

Device Marking for LQFP100

The following figure gives an example of topside marking orientation versus pin 1 identifier location.

Figure 45. LQFP100 marking example (package top view)

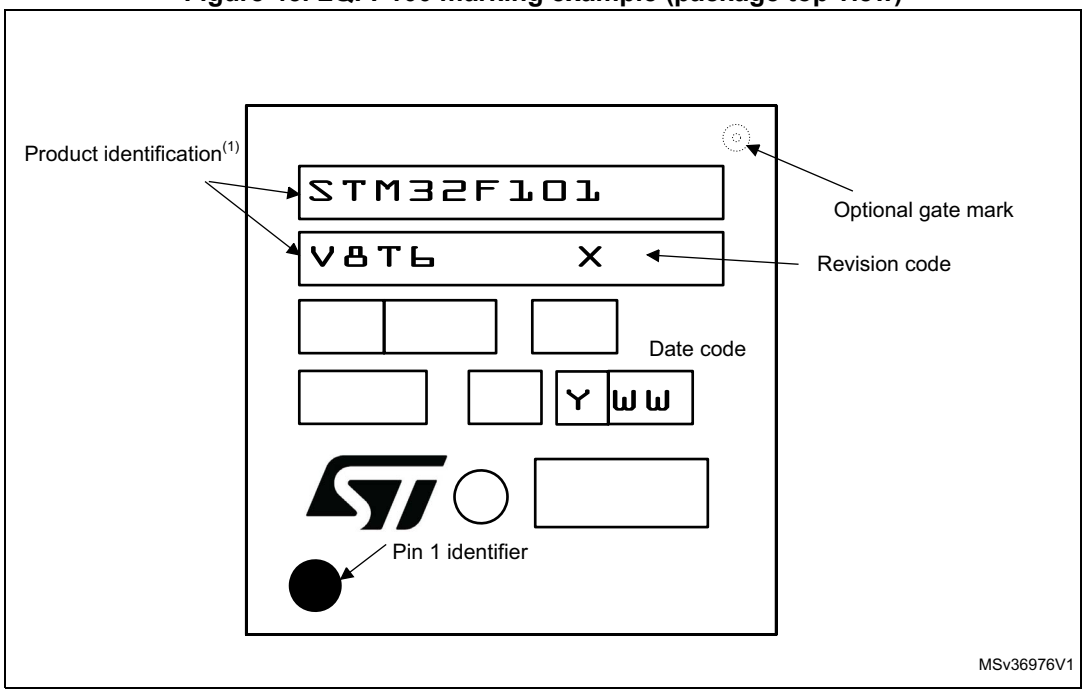

1. Parts marked as “ES”,”E” or accompanied by an Engineering Sample notification letter, are not yet qualified and therefore not yet ready to be used in production and any consequences deriving from such usage will not be at ST charge. In no event, ST will be liable for any customer usage of these engineering samples in production. ST Quality has to be contacted prior to any decision to use these Engineering samples to run qualification activity.

6.5 LQFP64 package information

Figure 46. LQFP64 - 64-pin, 10 x 10 mm low-profile quad flat package outline

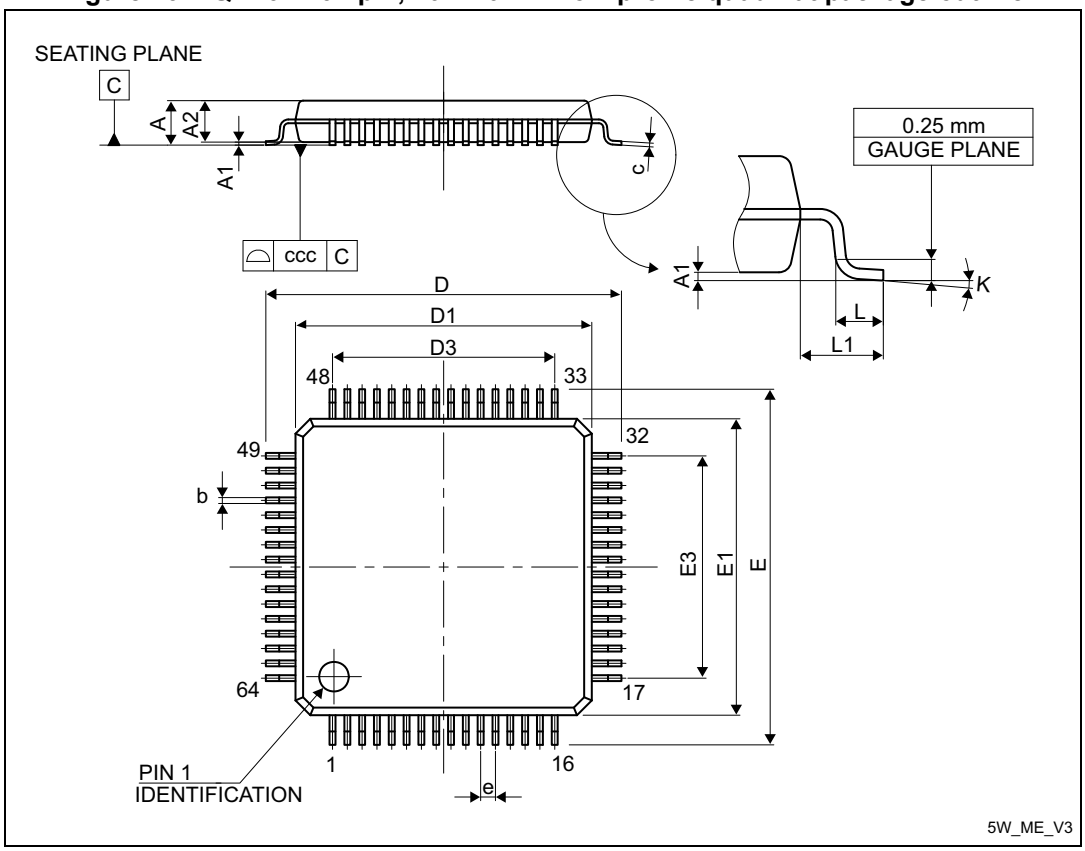

1. Drawing is not to scale.

Table 49. LQFP64 - 64-pin, 10 x 10 mm low-profile quad flat package mechanical data

Symbol	millimeters			inches(1)		
	Min	Typ	Max	Min	Typ	Max
A	-	-	1.600	-	-	0.0630
A1	0.050	-	0.150	0.0020	-	0.0059
A2	1.350	1.400	1.450	0.0531	0.0551	0.0571
b	0.170	0.220	0.270	0.0067	0.0087	0.0106
c	0.090	-	0.200	0.0035	-	0.0079
D	-	12.000	-	-	0.4724	-
D1	-	10.000	-	-	0.3937	-
D3	-	7.500	-	-	0.2953	-
E	-	12.000	-	-	0.4724	-
E1	-	10.000	-	-	0.3937	-

Table 49. LQFP64 - 64-pin, 10 x 10 mm low-profile quad flat package mechanical data (continued)

Symbol	millimeters			inches[1]		
	Min	Typ	Max	Min	Typ	Max
E3	-	7.500	-	-	0.2953	-
e	-	0.500	-	-	0.0197	-
K	0°	3.5°	7°	0°	3.5°	7°
L	0.450	0.600	0.750	0.0177	0.0236	0.0295
L1	-	1.000	-	-	0.0394	-
ccc	-	-	0.080	-	-	0.0031

1. Values in inches are converted from mm and rounded to 4 decimal digits.

Figure 47. LQFP64 - 64-pin, 10 x 10 mm low-profile quad flat package recommended footprint

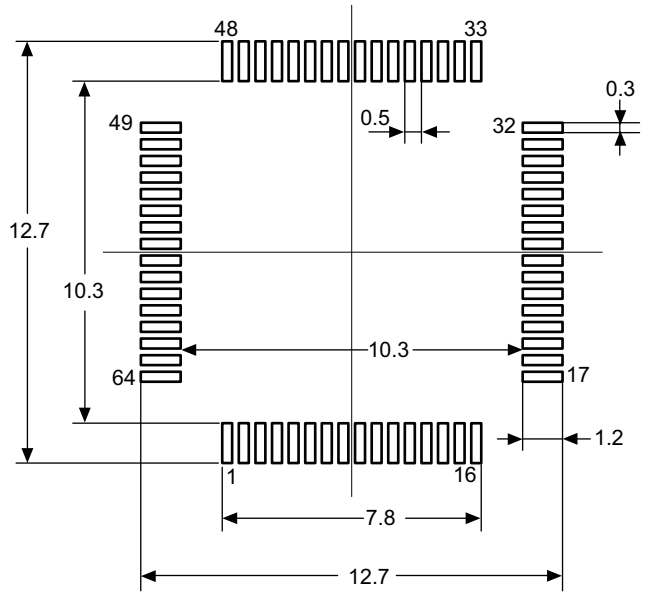

1. Dimensions are expressed in millimeters.

Device Marking for LQFP64

The following figure gives an example of topside marking orientation versus pin 1 identifier location.

Figure 48. LQFP64 marking example (package top view)

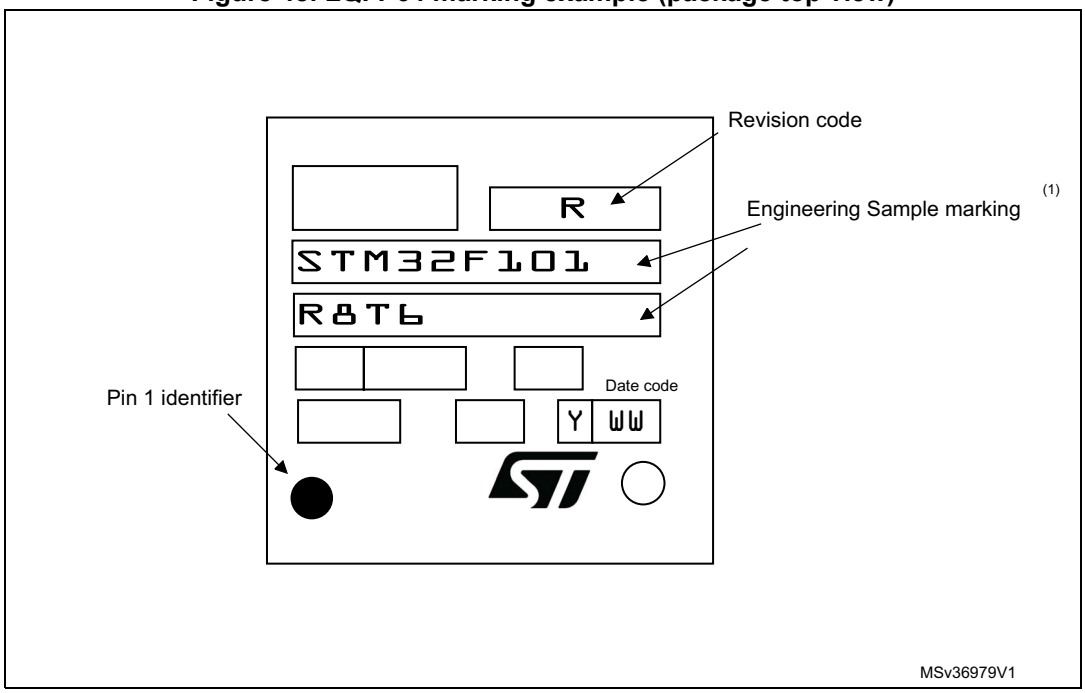

1. Parts marked as “ES”,”E” or accompanied by an Engineering Sample notification letter, are not yet qualified and therefore not yet ready to be used in production and any consequences deriving from such usage will not be at ST charge. In no event, ST will be liable for any customer usage of these engineering samples in production. ST Quality has to be contacted prior to any decision to use these Engineering samples to run qualification activity.

6.6 LQFP48 package information

Figure 49. LQFP48 - 48-pin, 7 x 7 mm low-profile quad flat package outline

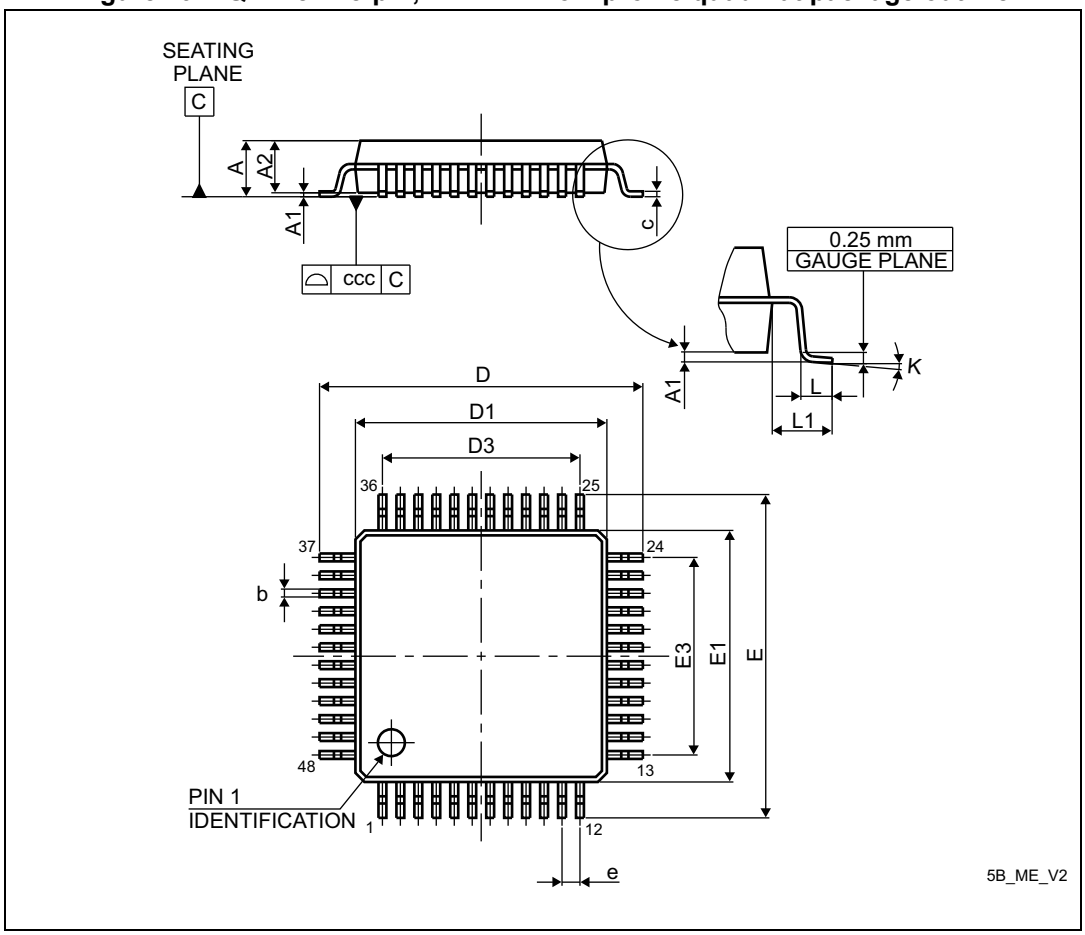

1. Drawing is not to scale.

Table 50. LQFP48 - 48-pin, 7 x 7 mm low-profile quad flat package mechanical data

Symbol	millimeters			inches[1]		
	Min	Typ	Max	Min	Typ	Max
A	-	-	1.600	-	-	0.0630
A1	0.050	-	0.150	0.0020	-	0.0059
A2	1.350	1.400	1.450	0.0531	0.0551	0.0571
b	0.170	0.220	0.270	0.0067	0.0087	0.0106
c	0.090	-	0.200	0.0035	-	0.0079
D	8.800	9.000	9.200	0.3465	0.3543	0.3622
D1	6.800	7.000	7.200	0.2677	0.2756	0.2835
D3	-	5.500	-	-	0.2165	-
E	8.800	9.000	9.200	0.3465	0.3543	0.3622
E1	6.800	7.000	7.200	0.2677	0.2756	0.2835
E3	-	5.500	-	-	0.2165	-
e	-	0.500	-	-	0.0197	-
L	0.450	0.600	0.750	0.0177	0.0236	0.0295
L1	-	1.000	-	-	0.0394	-
k	0°	3.5°	7°	0°	3.5°	7°
ccc	-	-	0.080	-	-	0.0031

1. Values in inches are converted from mm and rounded to 4 decimal digits.

Figure 50. LQFP48 - 48-pin, 7 x 7 mm low-profile quad flat package recommended footprint

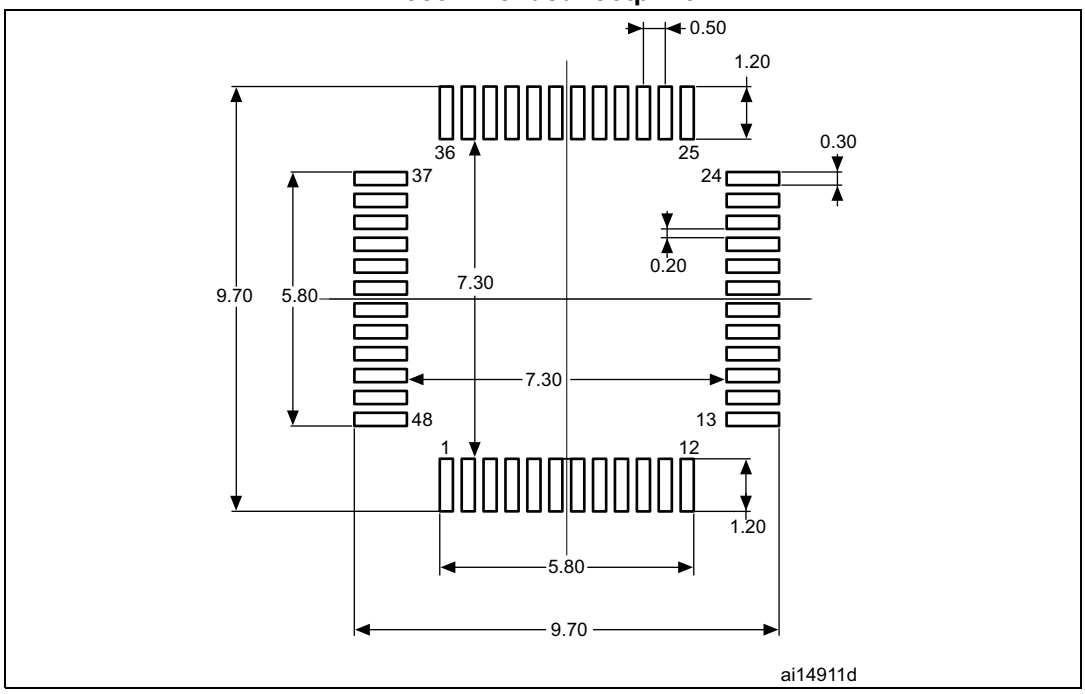

1. Dimensions are expressed in millimeters.

Device Marking for LQFP48

The following figure gives an example of topside marking orientation versus pin 1 identifier location.

Figure 51. LQFP48 marking example (package top view)

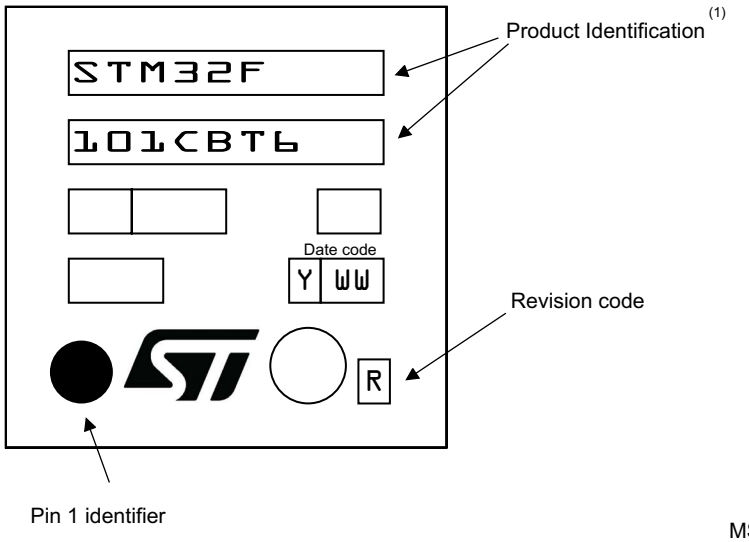

1. Parts marked as “ES”,”E” or accompanied by an Engineering Sample notification letter, are not yet qualified and therefore not yet ready to be used in production and any consequences deriving from such usage will not be at ST charge. In no event, ST will be liable for any customer usage of these engineering samples in production. ST Quality has to be contacted prior to any decision to use these Engineering samples to run qualification activity.

6.7 Thermal characteristics

The maximum chip junction temperature ($T_J$max) must never exceed the values given in *Table 8: General operating conditions on page 33*.

The maximum chip-junction temperature, T_J max, in degrees Celsius, may be calculated using the following equation:

T_J max = T_A max + (P_D max x Θ_{JA})

Where:

- T_A max is the maximum ambient temperature in °C,
- Θ_{JA} is the package junction-to-ambient thermal resistance, in °C/W,
- P_D max is the sum of P_{INT} max and $P_{I/O}$ max (P_D max = P_{INT} max + $P_{I/O}$max),
- P_{INT} max is the product of I_{DD} and V_{DD}, expressed in Watts. This is the maximum chip internal power.

$P_{I/O}$ max represents the maximum power dissipation on output pins where:

$$P_{I/O} \text{ max} = \Sigma (V_{OL} \times I_{OL}) + \Sigma((V_{DD} - V_{OH}) \times I_{OH}),$$

taking into account the actual V_{OL} / I_{OL} and V_{OH} / I_{OH} of the I/Os at low and high level in the application.

Table 51. Package thermal characteristics

Symbol	Parameter	Value	Unit
Θ_{JA}	**Thermal resistance junction-ambient** LQFP 100 - 14 x 14 mm / 0.5 mm pitch	46	°C/W
	Thermal resistance junction-ambient LQFP 64 - 10 x 10 mm / 0.5 mm pitch	45	
	Thermal resistance junction-ambient LQFP 48 - 7 x 7 mm / 0.5 mm pitch	55	
	Thermal resistance junction-ambient UFQFPN 48 - 6 x 6 mm / 0.5 mm pitch	32	
	Thermal resistance junction-ambient VFQFPN 36 - 6 x 6 mm / 0.5 mm pitch	18	

6.7.1 Reference document

JESD51-2 Integrated Circuits Thermal Test Method Environment Conditions - Natural Convection (Still Air). Available from www.jedec.org.

6.7.2 Evaluating the maximum junction temperature for an application

When ordering the microcontroller, the temperature range is specified in the ordering information scheme shown in *Table 52: Ordering information scheme*.

Each temperature range suffix corresponds to a specific guaranteed ambient temperature at maximum dissipation and, to a specific maximum junction temperature. Here, only temperature range 6 is available (–40 to 85 °C).

The following example shows how to calculate the temperature range needed for a given application, making it possible to check whether the required temperature range is compatible with the STM32F101xx junction temperature range.

Example: high-performance application

Assuming the following application conditions:

Maximum ambient temperature T_{Amax} = 82 °C (measured according to JESD51-2), I_{DDmax} = 50 mA, V_{DD} = 3.5 V, maximum 20 I/Os used at the same time in output at low level with I_{OL} = 8 mA, V_{OL}= 0.4 V and maximum 8 I/Os used at the same time in output mode at low level with I_{OL} = 20 mA, V_{OL}= 1.3 V

P_{INTmax} = 50 mA × 3.5 V= 175 mW

P_{IOmax} = 20 × 8 mA × 0.4 V + 8 × 20 mA × 1.3 V = 272 mW

This gives: P_{INTmax} = 175 mW and P_{IOmax} = 272 mW

P_{Dmax} = 175 + 272 = 447 mW

Thus: P_{Dmax} = 447 mW

Using the values obtained in *Table 51* T_{Jmax} is calculated as follows:

– For LQFP64, 45 °C/W

T_{Jmax} = 82 °C + (45 °C/W × 447 mW) = 82 °C + 20.1 °C = 102.1 °C

This is within the junction temperature range of the STM32F101xx (–40 < T_J < 105 °C).

Figure 52. LQFP64 P_D max vs. T_A

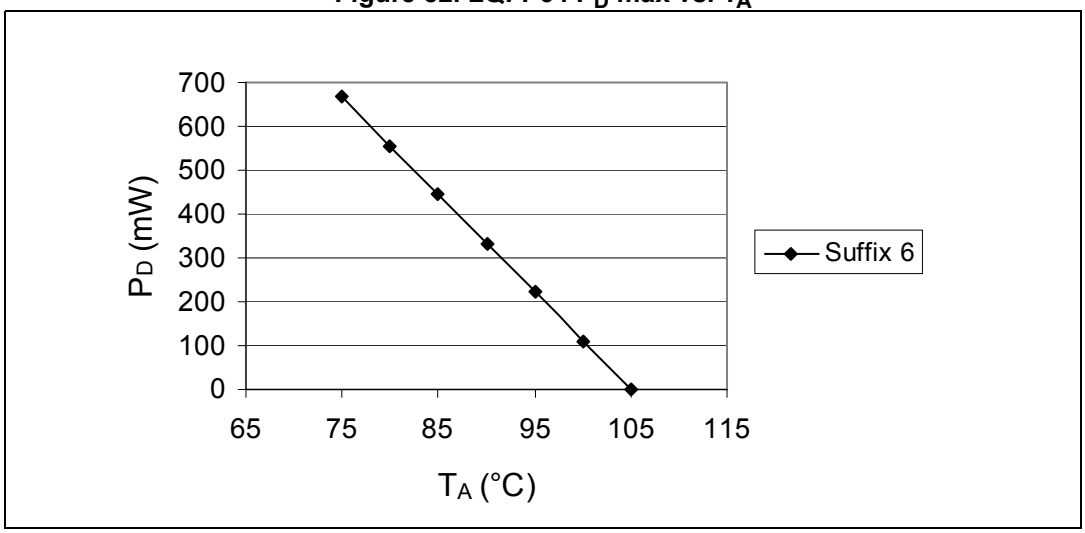

7 Ordering information scheme

Table 52. Ordering information scheme

Example: STM32 F 101 C 8 T 6 xxx

Device family

STM32 = ARM-based 32-bit microcontroller

Product type

F = general-purpose

Device subfamily

101 = access line

Pin count

T = 36 pins

C = 48 pins

R = 64 pins

V = 100 pins

Flash memory size(1)

8 = 64 Kbytes of Flash memory

B = 128 Kbytes of Flash memory

Package

T = LQFP

U = VFQFPN or UFQFPN

Temperature range

6 = Industrial temperature range, –40 to 85 °C.

Options

xxx = programmed parts

TR = tape and real

1. Although STM32F101x6 devices are not described in this datasheet, orderable part numbers that do not show the A internal code after temperature range code 6 should be referred to this datasheet for the electrical characteristics. The low-density datasheet only covers STM32F101x6 devices that feature the A code.

For a list of available options (speed, package, etc.) or for further information on any aspect of this device, please contact the nearest ST sales office.

8 Revision history

Table 53. Document revision history

Date	Revision	Changes
06-Jun-2007	1	First draft.
20-Jul-07	2	I_{DD} values modified in *Table 11: Maximum current consumption in Run and Sleep modes (TA = 85 °C)*. V_{BAT} range modified in *Power supply schemes*. V_{REF+} min value, t_{STAB}, t_{lat} and f_{TRIG} added to *Table 41: ADC characteristics*. *Table 37: TIMx characteristics* modified. *Note 6* modified and *Note 8*, *Note 5* and *Note 7* added below *Table 4: Medium-density STM32F101xx pin definitions*. *Figure 20: Low-speed external clock source AC timing diagram*, *Figure 11: Power supply scheme*, *Figure 28: Recommended NRST pin protection* and *Figure 29: I2C bus AC waveforms and measurement circuit(1)* modified. Sample size modified and machine model removed in *Electrostatic discharge (ESD)*. Number of parts modified and standard reference updated in *Static latch-up*. 25 °C and 85 °C conditions removed and class name modified in *Table 31: Electrical sensitivities*. $t_{SU(LSE)}$ changed to $t_{SU(LSE)}$ in *Table 21: HSE 4-16 MHz oscillator characteristics*. In *Table 27: Flash memory characteristics*, typical endurance added, data retention for T_A = 25 °C removed and data retention for T_A = 85 °C added. Note removed below *Table 8: General operating conditions*. V_{BG} changed to V_{REFINT} in *Table 11: Embedded internal reference voltage*. I_{DD} max values added to *Table 11: Maximum current consumption in Run and Sleep modes (TA = 85 °C)*. $I_{DD(HSI)}$ max value added to *Table 23: HSI oscillator characteristics*. R_{PU} and R_{PD} min and max values added to *Table 33: I/O static characteristics*. R_{PU} min and max values added to *Table 36: NRST pin characteristics* (two notes removed). Datasheet title corrected. USB characteristics section removed. *Features on page 1* list optimized. Small text changes.

Table 53. Document revision history (continued)

Date	Revision	Changes
18-Oct-2007	3	$V_{ESD(CDM)}$ value added to *Table 30: ESD absolute maximum ratings*. Note added below *Table 10: Embedded reset and power control block characteristics*. and below *Table 21: HSE 4-16 MHz oscillator characteristics*. Note added below *Table 34: Output voltage characteristics* and V_{OH} parameter description modified. *Table 41: ADC characteristics* and *Table 43: ADC accuracy - limited test conditions* modified. *Figure 33: ADC accuracy characteristics* modified. Packages are ECOPACK® compliant. Tables modified in *Section 5.3.5: Supply current characteristics*. ADC and ANTI_TAMPER signal names modified (see *Table 4: Medium-density STM32F101xx pin definitions*). *Table 4: Medium-density STM32F101xx pin definitions* modified. Note 4 removed and values updated in *Table 21: Typical current consumption in Standby mode*. V_{hys} modified in *Table 33: I/O static characteristics*. Updated: *Table 28: EMS characteristics* and *Table 29: EMI characteristics*. t_{VDD} modified in *Table 9: Operating conditions at power-up / power-down*. Typical values modified, note 2 modified and note 3 removed in *Table 25: Low-power mode wakeup timings*. Maximum current consumption *Table 12*, *Table 13* and *Table 14* updated. Values added and notes added in *Table 15: Typical and maximum current consumptions in Stop and Standby modes*. *On-chip peripheral current consumption on page 43* added. Package mechanical data inch values are calculated from mm and rounded to 4 decimal digits (see *Section 6: Package characteristics*). V_{prog} added to *Table 27: Flash memory characteristics*. T_{S_temp} added to *Table 45: TS characteristics*. $T_{S_vrefint}$ added to *Table 11: Embedded internal reference voltage*. Handling of unused pins specified in *General input/output characteristics on page 55*. All I/Os are CMOS and TTL compliant. *Table 4: Medium-density STM32F101xx pin definitions*: table clarified and *Note 7* modified. Internal LSI RC frequency changed from 32 to 40 kHz (see *Table 24: LSI oscillator characteristics*). Values added to *Table 25: Low-power mode wakeup timings*. N_{END} modified in *Table 27: Flash memory characteristics*. Option byte addresses corrected in *Figure 8: Memory map*. ACC_{HSI} modified in *Table 23: HSI oscillator characteristics*. t_{JITTER} removed from *Table 26: PLL characteristics*. *Appendix A: Important notes on page 71* added. Added: *Figure 13*, *Figure 14*, *Figure 16* and *Figure 18*.

Table 53. Document revision history (continued)

Date	Revision	Changes
22-Nov-2007	4	Document status promoted from preliminary data to datasheet. Small text changes. STM32F101CB part number corrected in *Table 1: Device summary*. Number of communication peripherals corrected for STM32F101Tx in *Table 2: Device features and peripheral counts (STM32F101xx medium-density access line)* and Number of GPIOs corrected for LQFP package. *Power supply schemes on page 16* modified. Main function and default alternate function modified for PC14 and PC15 in *Table 4: Medium-density STM32F101xx pin definitions*, *Note 6* added, Remap column added. *Figure 11: Power supply scheme* modified. $V_{DD} - V_{SS}$ ratings modified and *Note 1* modified in *Table 5: Voltage characteristics*. *Note 1* modified in *Table 6: Current characteristics*. *Note 2* added in *Table 10: Embedded reset and power control block characteristics*. 48 and 72 MHz frequencies removed from *Table 12*, *Table 13* and *Table 14*. MCU 's operating conditions modified in *Typical current consumption on page 42*. I_{DD_VBAT} typical value at 2.4 V modified and I_{DD_VBAT} maximum value added in *Table 15: Typical and maximum current consumptions in Stop and Standby modes*. Note added in *Table 16 on page 42* and *Table 17 on page 43*. *Table 18: Peripheral current consumption* modified. *Figure 17: Typical current consumption in Stop mode with regulator in Low-power mode versus temperature at VDD = 3.3 V and 3.6 V* added. Note removed below *Figure 30: SPI timing diagram - slave mode and CPHA = 0*. Note added below *Figure 31: SPI timing diagram - slave mode and CPHA = 1(1)*. *Figure 34: Typical connection diagram using the ADC* modified. $t_{SU(HSE)}$ and $t_{SU(LSE)}$ conditions modified in *Table 21* and *Table 22*, respectively. Maximum values removed from *Table 25: Low-power mode wakeup timings*. t_{RET} conditions modified in *Table 27: Flash memory characteristics*. Conditions modified in *Table 28: EMS characteristics*. Impedance size specified in *A.4: Voltage glitch on ADC input 0 on page 71*. Small text changes in *Table 34: Output voltage characteristics*. *Section 5.3.11: Absolute maximum ratings (electrical sensitivity)* updated. Details on unused pins removed from *General input/output characteristics on page 55*. *Table 40: SPI characteristics* updated. Notes added and I_{lkg} removed in *Table 41: ADC characteristics*. Note added in *Table 42* and *Table 45*. *Note 3* and *Note 2* added below *Table 43: ADC accuracy - limited test conditions*. Avg_Slope and V_{25} modified in *Table 45: TS characteristics*. Θ_{JA}value for VFQFPN36 package added in *Table 51: Package thermal characteristics*. *I2C interface characteristics on page 62* modified. Order codes replaced by *Section 7: Ordering information scheme*.

Table 53. Document revision history (continued)

Date	Revision	Changes
14-Mar-2008	5	*Figure 2: Clock tree on page 13* added. CRC added (see *CRC (cyclic redundancy check) calculation unit on page 9* and *Figure 8: Memory map on page 29* for address). Maximum T_J value given in *Table 7: Thermal characteristics on page 33*. P_D, T_A and T_J added, t_{prog} values modified and t_{prog} description clarified in *Table 27: Flash memory characteristics on page 51*. I_{DD} modified in *Table 15: Typical and maximum current consumptions in Stop and Standby modes on page 39*. ACC_{HSI} modified in *Table 23: HSI oscillator characteristics on page 49*, note 2 removed. t_{RET} modified in *Table 27: Flash memory characteristics*. $V_{NF(NRST)}$ unit corrected in *Table 36: NRST pin characteristics on page 60*. *Table 40: SPI characteristics on page 65* modified. I_{VREF} added in *Table 41: ADC characteristics on page 68*. *Table 43: ADC accuracy - limited test conditions* added. *Table 44: ADC accuracy* modified. LQFP100 package specifications updated (see *Section 6: Package characteristics on page 73*). Recommended LQFP100, LQFP64, LQFP48 and VFQFPN36 footprints added (see *Figure 44*, *Figure 47*, *Figure 50* and *Figure 41*). *Section 6.7: Thermal characteristics on page 90* modified. *Appendix A: Important notes* removed.
21-Mar-2008	6	Small text changes. In *Table 27: Flash memory characteristics*: – N_{END} tested over the whole temperature range – cycling conditions specified for t_{RET} – t_{RET} min modified at T_A = 55 °C *Figure 2: Clock tree* corrected. *Figure 8: Memory map* clarified. V_{25}, Avg_Slope and T_L modified in *Table 45: TS characteristics*. CRC feature removed.
22-May-2008	7	*Section 1: Introduction* modified, *Section 2.2: Full compatibility throughout the family* added. CRC feature added. I_{DD_VBAT} removed from *Table 21: Typical current consumption in Standby mode on page 42*. Values added to *Table 39: SCL frequency (fPCLK1= 36 MHz, VDD_I2C = 3.3 V) on page 64*. *Figure 30: SPI timing diagram - slave mode and CPHA = 0 on page 66* modified. *Equation 1* corrected. *Section 6.7.2: Evaluating the maximum junction temperature for an application on page 91* added. Axx option added to *Table 52: Ordering information scheme on page 92*.

Table 53. Document revision history (continued)

Date	Revision	Changes
21-Jul-2008	8	Small text changes. *Power supply supervisor on page 16* modified and V_{DDA} added to *Table 8: General operating conditions on page 33*. Capacitance modified in *Figure 11: Power supply scheme on page 31*. Table notes revised in *Section 5: Electrical characteristics*. Maximum value of $t_{RSTTEMPO}$ modified in *Table 10: Embedded reset and power control block characteristics on page 35*. Values added to *Table 15: Typical and maximum current consumptions in Stop and Standby modes* and *Table 21: Typical current consumption in Standby mode* removed. f_{HSE_ext} modified in *Table 19: High-speed external user clock characteristics on page 45*. f_{PLL_IN} modified in *Table 26: PLL characteristics on page 50*. f_{HCLK} corrected in *Table 28: EMS characteristics*. Minimum SDA and SCL fall time value for Fast mode removed from *Table 38: I2C characteristics on page 63*, note 1 modified. $t_{h(NSS)}$ modified in *Table 40: SPI characteristics on page 65* and *Figure 30: SPI timing diagram - slave mode and CPHA = 0 on page 66*. C_{ADC} modified in *Table 41: ADC characteristics on page 68* and *Figure 34: Typical connection diagram using the ADC* modified. f_{PCLK2} corrected in *Table 43: ADC accuracy - limited test conditions* and *Table 44: ADC accuracy*. Typical T_{S_temp} value removed from *Table 45: TS characteristics on page 72*. LQFP48 package specifications updated (see *Table 50*, *Table 49* and *Table 50*). Axx option removed from *Table 52: Ordering information scheme on page 92*.
24-Jul-2008	9	First page modified: “Up to 2 x I²C interfaces” instead of “1 x I²C interface”
23-Sep-2008	10	STM32F101xx devices with 32 Kbyte Flash memory capacity removed, document updated accordingly. *Section 2.2: Full compatibility throughout the family on page 14* updated. Notes modified in *Table 4: Medium-density STM32F101xx pin definitions on page 24*. *Note 2* modified below *Table 5: Voltage characteristics on page 32*, $\|\Delta V_{DDx}\|$ min and $\|\Delta V_{DDx}\|$ min removed. *Note 2* added to *Table 8: General operating conditions on page 33*. Measurement conditions specified in *Section 5.3.5: Supply current characteristics on page 36*. I_{DD} in standby mode at 85 °C modified in *Table 15: Typical and maximum current consumptions in Stop and Standby modes on page 39*. *General input/output characteristics on page 55* modified. Note added below *Table 52: Ordering information scheme*. *Section 7.1: Future family enhancements* removed. Small text changes.

Table 53. Document revision history (continued)

Date	Revision	Changes
21-Apr-2009	11	I/O information clarified *on page 1*. *Figure 8: Memory map* modified. In *Table 4: Medium-density STM32F101xx pin definitions*: PB4, PB13, PB14, PB15, PB3/TRACESWO moved from Default column to Remap column. Note modified in *Table 12: Maximum current consumption in Run mode, code with data processing running from Flash* and *Table 14: Maximum current consumption in Sleep mode, code running from Flash or RAM*. *Figure 16*, *Figure 17* and *Figure 18* show typical curves. *Table 19: High-speed external user clock characteristics* and *Table 20: Low-speed external user clock characteristics* modified. ACC_{HSI} max values modified in *Table 23: HSI oscillator characteristics*. Small text changes.
22-Sep-2009	12	*Note 5* updated and *Note 4* added in *Table 4: Medium-density STM32F101xx pin definitions*. V_{RERINT} and T_{Coeff} added to *Table 11: Embedded internal reference voltage*. Typical I_{DD_VBAT} value added in *Table 15: Typical and maximum current consumptions in Stop and Standby modes*. *Figure 15: Typical current consumption on VBAT with RTC on versus temperature at different VBAT values* added. f_{HSE_ext} min modified in *Table 19: High-speed external user clock characteristics*. C_{L1} and C_{L2} replaced by C in *Table 21: HSE 4-16 MHz oscillator characteristics* and *Table 22: LSE oscillator characteristics (fLSE = 32.768 kHz)*, notes modified and moved below the tables. *Table 23: HSI oscillator characteristics* modified. Conditions removed from *Table 25: Low-power mode wakeup timings*. *Figure 28: Recommended NRST pin protection* modified. *Note 1* modified below *Figure 21: Typical application with an 8 MHz crystal*. *Figure 28: Recommended NRST pin protection* modified. IEC 1000 standard updated to IEC 61000 and SAE J1752/3 updated to IEC 61967-2 in *Section 5.3.10: EMC characteristics on page 51*. Jitter added to *Table 26: PLL characteristics*. C_{ADC} and R_{AIN} parameters modified in *Table 41: ADC characteristics*. R_{AIN} max values modified in *Table 42: RAIN max for fADC = 14 MHz*. Small text changes.
20-May-2010	13	Added STM32F101TB devices. Added VFQFPN48 package. Updated note 2 below *Table 38: I2C characteristics* Updated *Figure 29: I2C bus AC waveforms and measurement circuit(1)* Updated *Figure 28: Recommended NRST pin protection* Updated *Section 5.3.12: I/O current injection characteristics*

Table 53. Document revision history (continued)

Date	Revision	Changes
19-Apr-2011	14	Updated footnotes below *Table 5: Voltage characteristics on page 32* and *Table 6: Current characteristics on page 33* Updated tw min in *Table 19: High-speed external user clock characteristics on page 45* Updated startup time in *Table 22: LSE oscillator characteristics (fLSE = 32.768 kHz) on page 48* Added *Section 5.3.12: I/O current injection characteristics* Updated *Section 5.3.13: I/O port characteristics*
15-May-2013	15	Replaced VQFN48 package with UQFN48 in cover page packages, *Table 2: Device features and peripheral counts (STM32F101xx medium-density access line)*, *Figure 7: STM32F101xx medium-density access line UVFQPFN48 pinout*, *Table 4: Medium-density STM32F101xx pin definitions*, *Figure 4: STM32F101xx medium-density access line LQFP64 pinout*, added *Figure 37: UFQFPN48 7 x 7 mm, 0.5 mm pitch, package outline*, *Table 47: UFQFPN48 7 x 7 mm, 0.5 mm pitch, package mechanical data*, *Table 52: Ordering information scheme* and updated *Table 51: Package thermal characteristics* Updated 'All GPIOs are high current...' in *Section 2.3.22: GPIOs (general-purpose inputs/outputs)* Updated *Table 4: Medium-density STM32F101xx pin definitions* Corrected Sigma letter in *Section 5.1.1: Minimum and maximum values* Updated *Table 6: Current characteristics* Added 'V_{IN}' in *Table 8: General operating conditions* Removed the first sentence in *Section 5.3.16: Communications interfaces* Updated first sentence in *Output driving current* Added note *5.* in *Table 23: HSI oscillator characteristics* Updated 'V_{IL}' and 'V_{IH}' in *Table 33: I/O static characteristics* Added notes to *Figure 23: Standard I/O input characteristics - CMOS port*, *Figure 24: Standard I/O input characteristics - TTL port*, *Figure 25: 5 V tolerant I/O input characteristics - CMOS port* and *Figure 26: 5 V tolerant I/O input characteristics - TTL port* Updated note *2.* in *Table 44: ADC accuracy* Updated *Figure 29: I2C bus AC waveforms and measurement circuit(1)* Updated note *2.* and *3.*,removed note "the device must internally..." in *Table 38: I2C characteristics* Updated title of *Table 39: SCL frequency (fPCLK1= 36 MHz, VDD_I2C = 3.3 V)*
05-Aug-2013	16	Updated the reference for '$V_{ESD(CDM)}$' in *Table 30: ESD absolute maximum ratings* Corrected 'tf(IO)out' in *Figure 27: I/O AC characteristics definition* Updated *Table 46: UFQFPN48 7 x 7 mm, 0.5 mm pitch, package mechanical data*
19-Jun-2015	17	Updated *Section 6.1: Package mechanical data* and *Table 18: Peripheral current consumption*.

IMPORTANT NOTICE – PLEASE READ CAREFULLY

STMicroelectronics NV and its subsidiaries (“ST”) reserve the right to make changes, corrections, enhancements, modifications, and improvements to ST products and/or to this document at any time without notice. Purchasers should obtain the latest relevant information on ST products before placing orders. ST products are sold pursuant to ST’s terms and conditions of sale in place at the time of order acknowledgement.

Purchasers are solely responsible for the choice, selection, and use of ST products and ST assumes no liability for application assistance or the design of Purchasers’ products.

No license, express or implied, to any intellectual property right is granted by ST herein.

Resale of ST products with provisions different from the information set forth herein shall void any warranty granted by ST for such product.

ST and the ST logo are trademarks of ST. All other product or service names are the property of their respective owners.

Information in this document supersedes and replaces information previously supplied in any prior versions of this document.

© 2015 STMicroelectronics – All rights reserved